YAMAHA

PARTS CATALOGUE

MNBM9

SMX

T115FX (BNT2) MALAYSIA

YAMAHA
GENUINE
Parts & Accessories

31BNT-440E1

( )

T115FX
PARTS CATALOGUE
©2025 by Yamaha Motor Co., Ltd.
1st edition, November 2025
All rights reserved.
Any reprinting or unauthorized use
without the written permission of
Yamaha Motor Co., Ltd.
is expressly prohibited.
Printed in Japan.

FOREWORD

This Parts Catalogue is related to the parts for the model(s) on the cover page. When you are ordering replacement parts, please refer to this Parts Catalogue and quote both part numbers and part names correctly.

1. Modifications or additions which have been made after the issue of the Parts Catalogue will be announced in the Parts News.
   It is advisable that you make the necessary corrections to the Parts Catalogue according to the Parts News.

2. Abbreviations
   The following abbreviations are used in this Parts Catalogue.

   "UR" Use specified parts number.

   "UN" Use as many as needed.

   "AP" Alternate Parts

   "LM" Locally Made (Parts need to be ordered locally)

   "F#" Frame No. (Applicable machine No.)

   "O/S" Over Size

3. The number of components for assembly
   - Parts, which are to be supplied in an assembly, are listed with a dot (.) in front of the part name as shown below.
   - The numeral appearing to the right of each component part indicates the quantity of parts for each assembly unit.

PART NO.	DESCRIPTION	Q'TY	REMARKS
2F5–83310–60	FRONT FLASHER LIGHT ASSY	2	
115–83311–60	.BULB (6V–18W)	1	

4. Applicable colours of graphics are represented in the "REMARKS" as shown below.

PART NO.	DESCRIPTION	Q'TY	REMARKS
2N4–24110–00–X5	FUEL TANK COMP.	2	MXR
3J1–24240–10	.GRAPHIC, FUEL TANK	1	FOR MXR

5. Note that the illustrations for reference in finding parts numbers are not to be used for assembling. When assembling, please use the applicable service manual.

6. The asterisk (*) before a reference number indicates modified items after the first edition.

7. Applicable Serial No.

Frame Serial No.

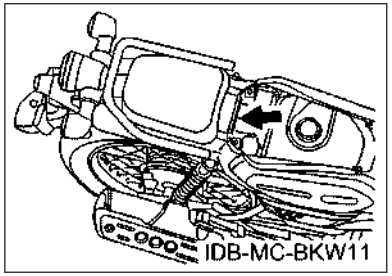

Engine Serial No.

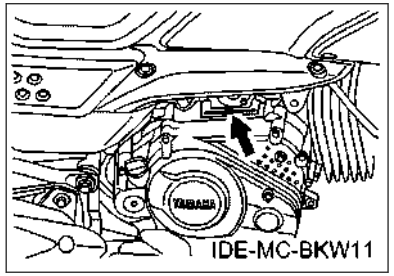

8. Applicable Colour Code (The (*) mark shows Model colour.)

Abbreviation	Colour Name	Colour Code
CIS	CIRCUIT SILVER	00WN
MDNM6	MAT DARK GRAY METALLIC 6	1579
MNBM9(*)	MAT GRAYISH BLUE METALLIC 9	1941
MS1	MAT SILVER 1	1160
SMX(*)	BLACK METALLIC X	0903

9. Applicable Starting Serial No.

Frame Serial No.

Serial No.	Name Of Q'ty Column	Model Code

Engine Serial No.

Serial No.	Name Of Q'ty Column	Model Code

CONTENTS

ENGINE

CYLINDER HEAD....1
CRANKSHAFT & PISTON....2
VALVE....3
CAMSHAFT & CHAIN....4
OIL PUMP....5
INTAKE....6
EXHAUST....8
CRANKCASE....9
CRANKCASE COVER 1....10
STARTER CLUTCH....11
CLUTCH....12
TRANSMISSION....14
SHIFT CAM & FORK....16
SHIFT SHAFT....17

CHASSIS

FRAME....18
FENDER....19
SIDE COVER....20
REAR ARM & SUSPENSION....22
STEERING....23
FRONT FORK....25
FUEL TANK....27
SEAT....28
FRONT WHEEL....29
FRONT BRAKE CALIPER....30
REAR WHEEL....31
STEERING HANDLE & CABLE....33
FRONT MASTER CYLINDER....34
STAND & FOOTREST....35
LEG SHIELD....37
GENERATOR....39
STARTING MOTOR....40
FLASHER LIGHT....41
METER....42
HEADLIGHT....43
TAILLIGHT....44
HANDLE SWITCH & LEVER....45
ELECTRICAL 1....46
ELECTRICAL 2....47

INDEX

NUMERICAL INDEX....48

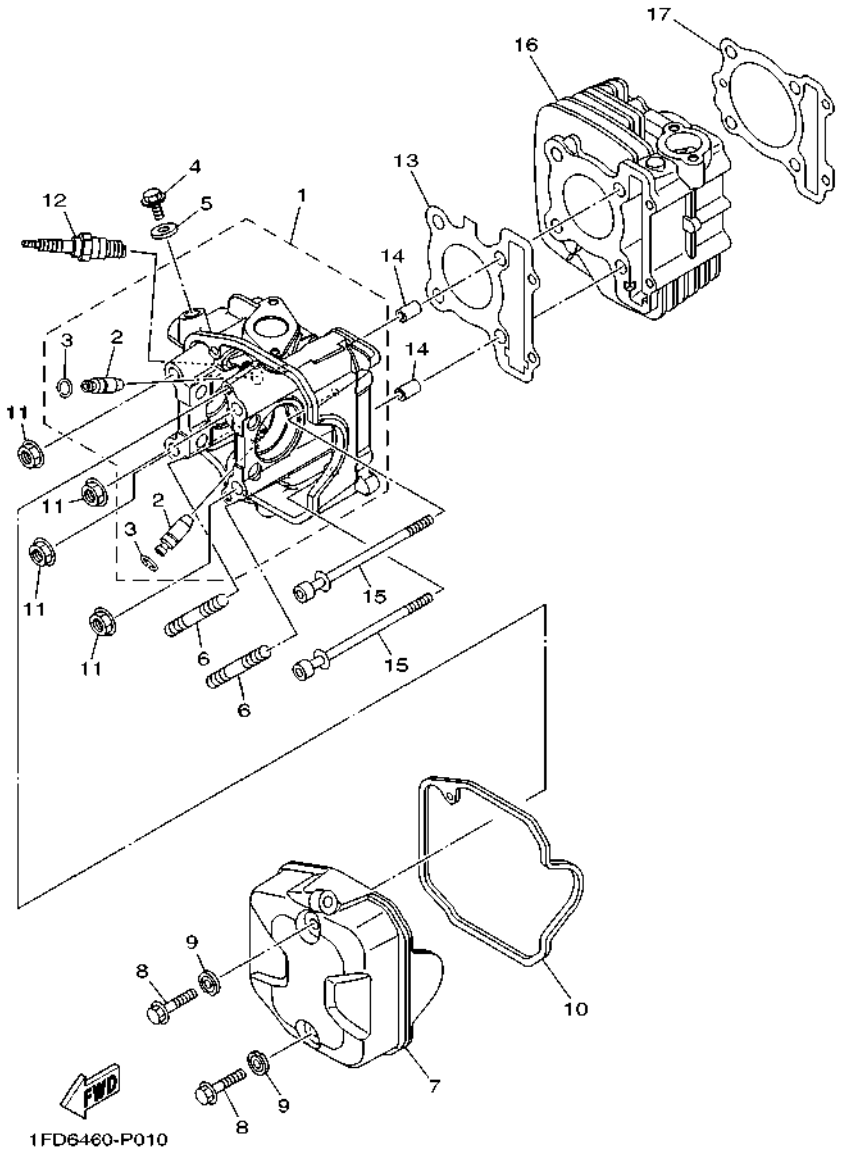

FIG. 1 CYLINDER HEAD

REF. NO.	PART NO.	DESCRIPTION	BNT2					REMARKS
1	1FC–E1102–10	CYLINDER HEAD ASSY	1					
2	1DR–E1133–10	.GUIDE, VALVE 1	2					
3	93440–10153	.CIRCLIP	2					
4	95E32–10014	BOLT, FLANGE DEEP RECESS	1					
5	90430–10807	GASKET	1					
6	95612–08625	BOLT, STUD	2					
7	1FC–E1191–00	COVER, CYLINDER HEAD 1	1					
8	95D32–06030	BOLT, FLANGE DEEP RECESS	2					
9	1FC–E1173–00	WASHER, SEALING	2					
10	1FD–E1193–00	GASKET, HEAD COVER 1	1					
11	90179–08518	NUT	4					
12	94700–00372	PLUG, SPARK (NGK CR6HSA)	1					
13	1FC–E1181–00	GASKET, CYLINDER HEAD 1	1					
14	91810–14808	PIN, DOWEL	2					
15	90110–06868	BOLT, HEXAGON SOCKET HEAD	2					
16	2VP–E1310–00	CYLINDER	1					
17	1FC–E1351–00	GASKET, CYLINDER	1					

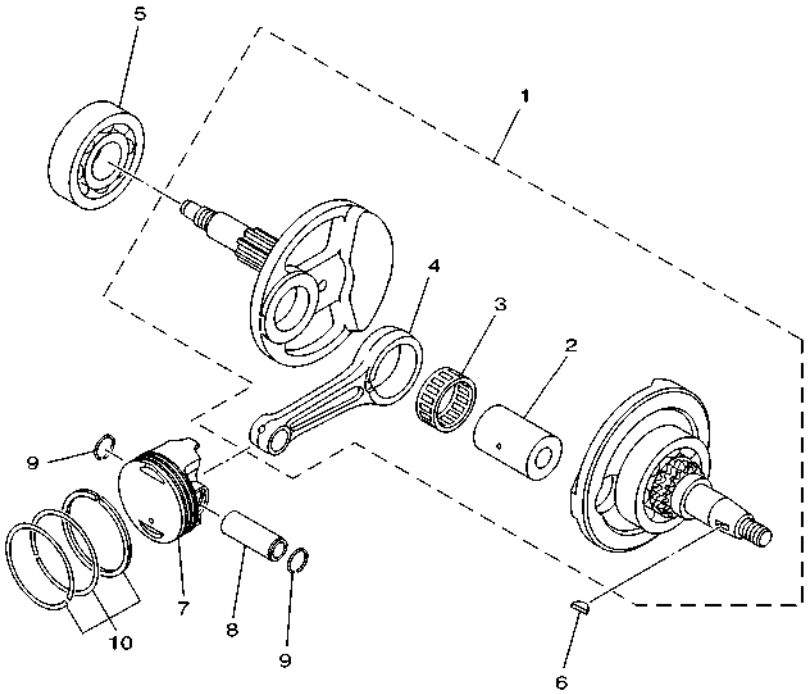

1PB2422-M020

FIG. 2 CRANKSHAFT & PISTON

REF. NO.	PART NO.	DESCRIPTION	BNT2					REMARKS
1	1FC–WE140–50	CRANKSHAFT ASSY	1					
2	1DY–E1681–00	.PIN, CRANK 1	1					
3	93310–528YX	.BEARING	1					
4	1FC–E1651–00	.ROD, CONNECTING	1					
5	93306–355Y2	BEARING	1					
6	90280–03017	KEY, WOODRUFF	1					
7	1PB–E1631–00	PISTON (STD)	1					
8	1FC–E1633–00	PIN, PISTON	1					
9	93450–14088	CIRCLIP	2					
10	1DY–E1603–10	PISTON RING SET (STD)	1					

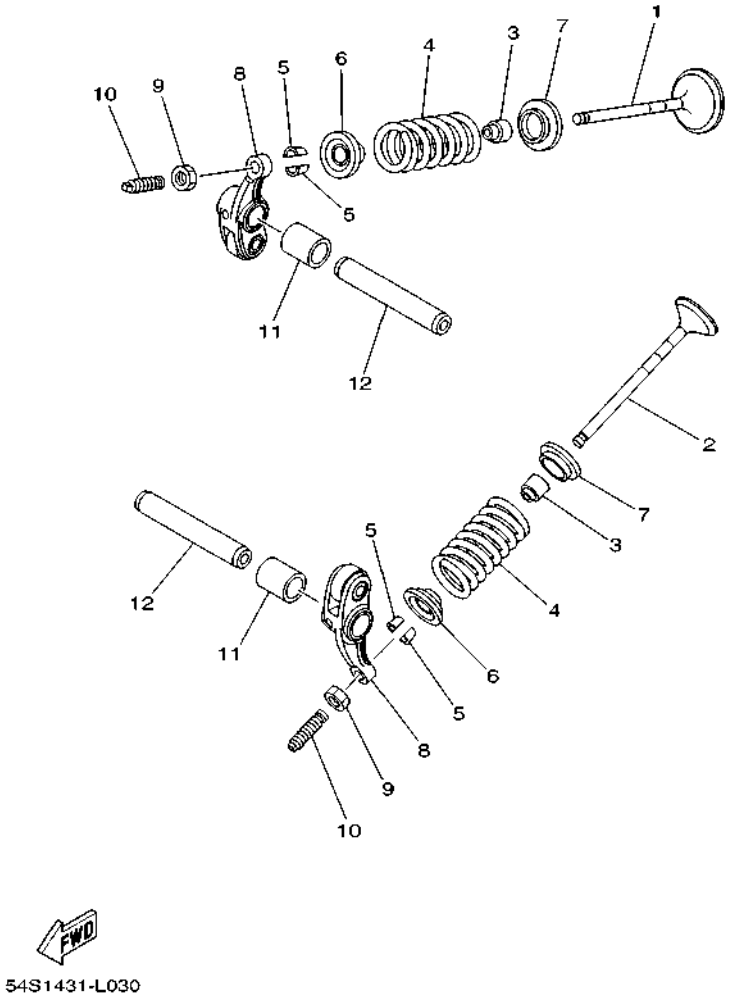

FIG. 3 VALVE

REF. NO.	PART NO.	DESCRIPTION	BNT2					REMARKS
1	2BM–E2111–01	VALVE, INTAKE	1					
2	BJ7–E2121–00	VALVE, EXHAUST	1					
3	1DB–E2119–00	SEAL, VALVE STEM	2					
4	B7E–E2113–00	SPRING, VALVE INNER	2					
5	5TL–E2118–00	LOCK, VALVE SPRING RETAINER	4					UR
	1AA–12118–00	LOCK, VALVE SPRING RETAINER	4					UR
6	B63–E2117–01	RETAINER, VALVE SPRING	2					
7	55P–E2126–00	SEAT, VALVE SPRING 2	2					
8	2BM–E2151–02	ARM, VALVE ROCKER	2					
9	90170–05803	NUT	2					
10	33S–E2159–10	SCREW, VALVE ADJUSTING	2					UR
	33S–E2159–01	SCREW, VALVE ADJUSTING	2					UR
11	44D–E2662–00	COLLAR 1	2					
12	1FC–E2146–00	SHAFT, ROCKER	2					

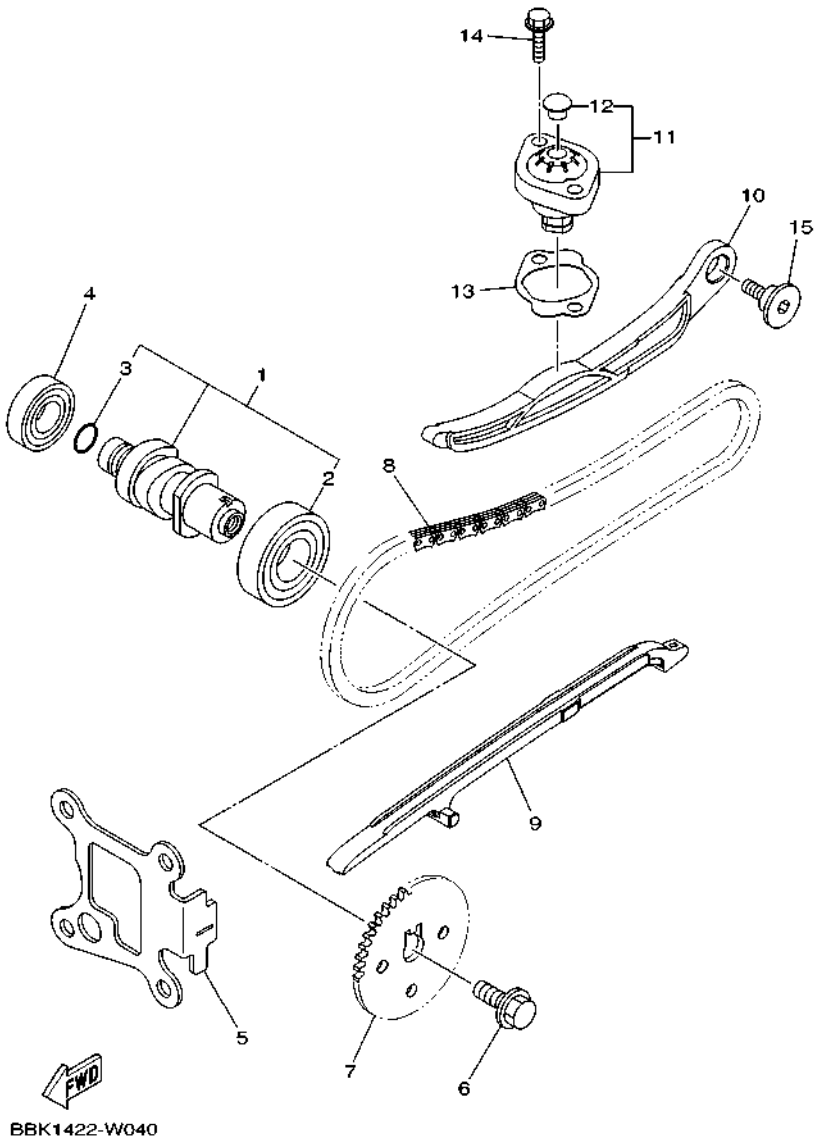

FIG. 4 CAMSHAFT & CHAIN

REF. NO.	PART NO.	DESCRIPTION	BNT2					REMARKS
1	BPC–E2170–00	CAMSHAFT ASSY 1	1					
2	93306–054XH	.BEARING	1					
3	93210–12801	.O-RING	1					
4	93306–002XK	BEARING	1					
5	1DB–E111F–00	PLATE	1					
6	90105–088E1	BOLT, FLANGE	1					
7	44S–E2176–00	SPROCKET, CAM CHAIN	1					
8	94568–A6090	CHAIN	1					
9	1FC–E2231–00	GUIDE, STOPPER 1	1					
10	BBK–E2241–00	GUIDE, STOPPER 2	1					
11	2ND–E2210–20	TENSIONER ASSY, CAM CHAIN	1					
12	5MX–E2222–00	.PLUG	1					
13	2VP–E2213–00	GASKET, TENSIONER CASE	1					
14	95E32–06020	BOLT, FLANGE DEEP RECESS	2					
15	1DR–E2228–00	BOLT	1					

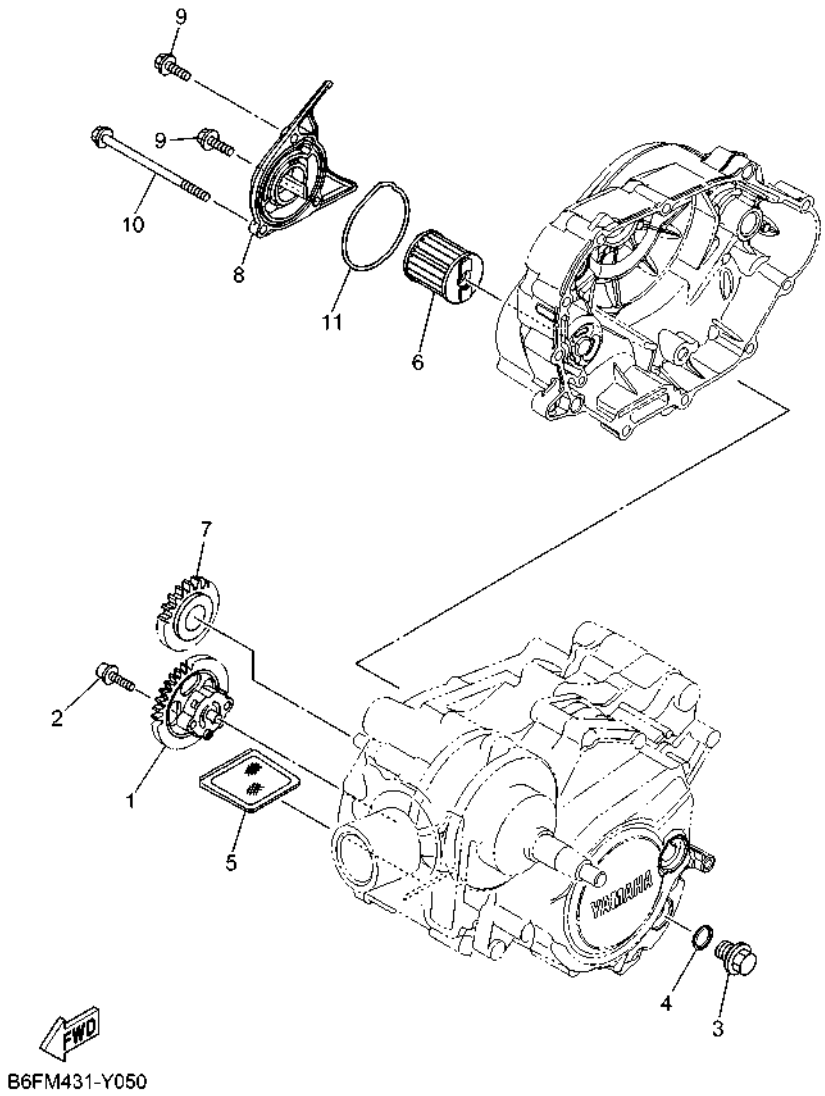

FIG. 5 OIL PUMP

REF. NO.	PART NO.	DESCRIPTION	BNT2					REMARKS
1	16S–E3300–10	OIL PUMP ASSY	1					
2	90110–05801	BOLT, HEXAGON SOCKET HEAD	2					
3	90340–12816	BOLT, STRAIGHT SCREW	1					
4	90430–12803	GASKET	1					
5	4LS–E3411–00	STRAINER, OIL	1					
6	38B–E3440–01	ELEMENT ASSY, OIL CLEANER	1					
7	16S–E3324–00	GEAR, PUMP DRIVE	1					
8	BKW–E3447–00	COVER, OIL ELEMENT	1					
9	95E32–06020	BOLT, FLANGE DEEP RECESS	2					
10	95E32–06100	BOLT, FLANGE DEEP RECESS	1					
11	93210–60801	O-RING	1					

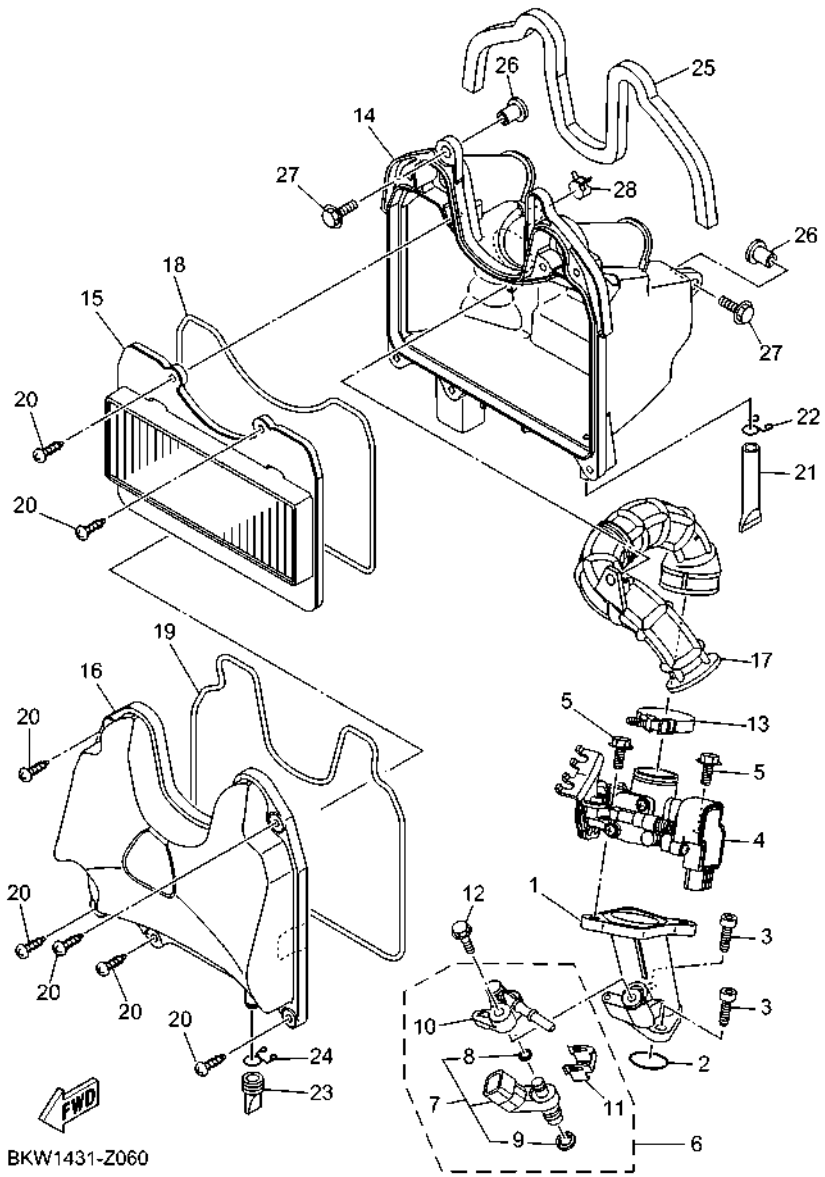

FIG. 6 INTAKE

REF. NO.	PART NO.	DESCRIPTION	BNT2					REMARKS
1	B7E–E3585–00	MANIFOLD	1					
2	93210–29809	O-RING	1					
3	91332–06020	BOLT	2					
4	BPC–E3750–01	THROTTLE BODY ASSY	1					
5	95E32–06016	BOLT, FLANGE DEEP RECESS	2					
6	B7E–E3770–00	INJECTOR ASSY	1					
7	B7E–E3761–00	.INJECTOR	1					
8	2SU–E4147–00	..O-RING	1					
9	B7E–E41A1–00	..SEAL RING	1					
10	2SU–E3938–00	.PIPE	1					
11	1ST–E4137–00	.CLIP	1					
12	95D32–06025	BOLT, FLANGE DEEP RECESS	1					
13	1FC–E3575–00	BAND	1					
14	1FC–E4411–11	CASE, AIR CLEANER 1	1					
15	1FC–E4450–01	ELEMENT ASSY, AIR CLEANER	1					
16	BKW–E4412–00	CAP, CLEANER CASE 1	1					
17	1FC–E4453–10	JOINT, AIR CLEANER 1	1					
18	1FC–E4462–00	SEAL	1					
19	1FC–E4452–00	SEAL	1					
20	97702–50030	SCREW, TAPPING	7					
21	5HU–E443E–01	PIPE, DRAIN	1					
22	90467–110A3	CLIP	1					
23	16S–E443G–00	PIPE, DRAIN 2	1					
24	90467–12802	CLIP	1					
25	1FC–E4426–00	DAMPER 2	1					
26	90387–06803	COLLAR	2					
27	90119–06810	BOLT, WITH WASHER	2					

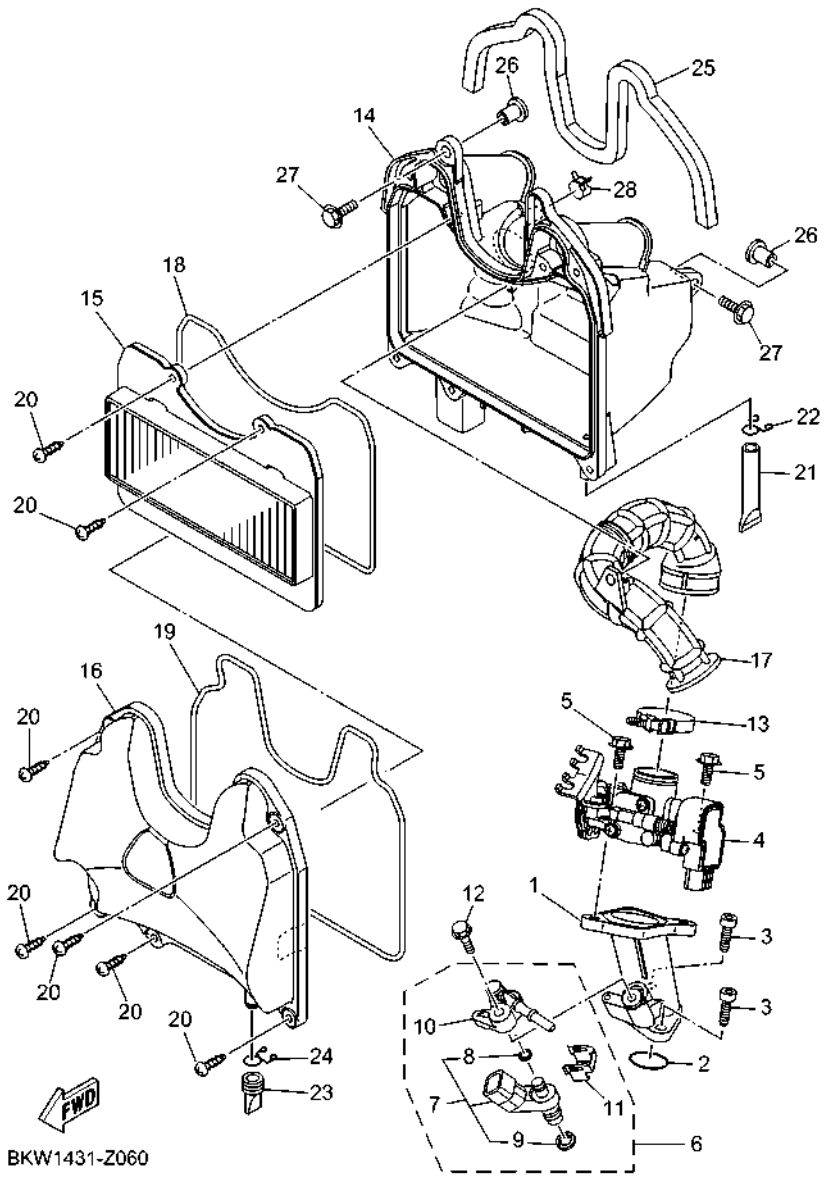

FIG. 6 INTAKE

REF. NO.	PART NO.	DESCRIPTION	BNT2					REMARKS
28	90467–13807	CLIP	1					

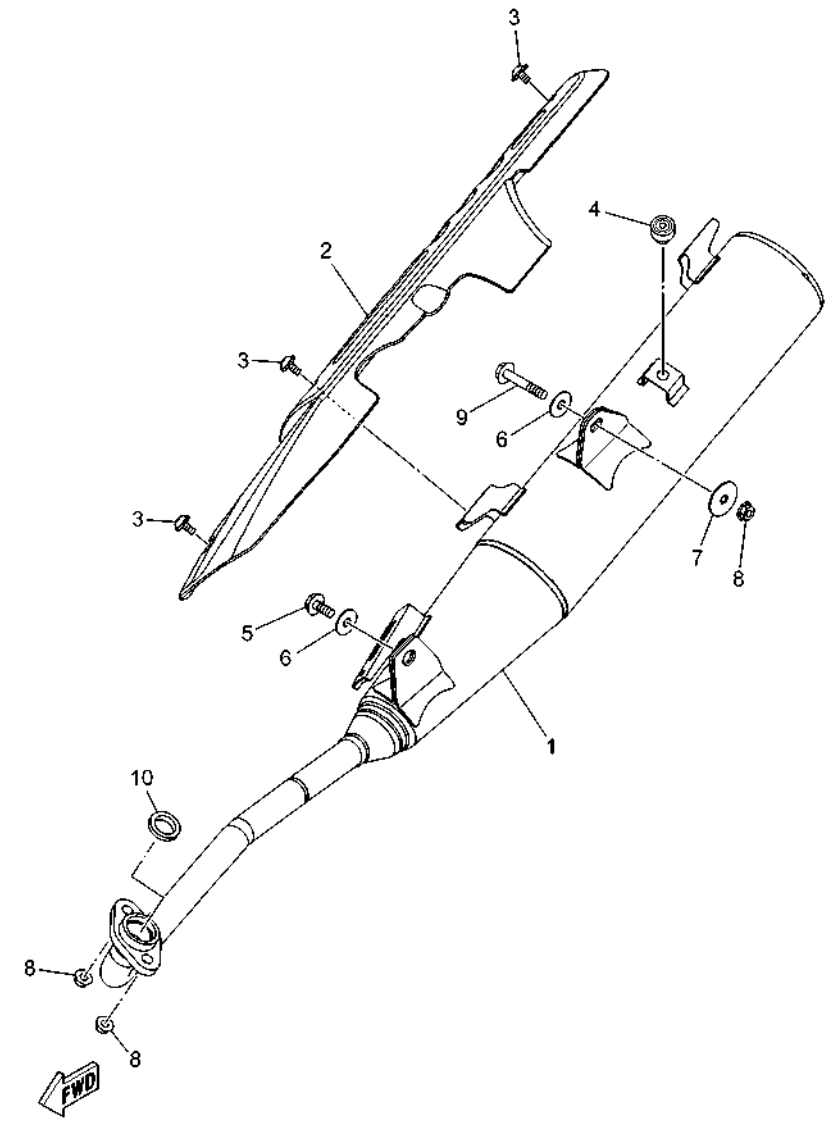

BKW1431-Z070

FIG. 7 EXHAUST

REF. NO.	PART NO.	DESCRIPTION	BNT2					REMARKS
1	BKW–E4711–00	MUFFLER 1	1					
2	BKW–E4718–00	PROTECTOR, MUFFLER 1	1					
3	90111–06807	BOLT, HEXAGON SOCKET BUTTON	3					
4	BKW–E4757–00	DAMPER, MUFFLER 2	1					
5	95D02–08020	BOLT, FLANGE DEEP RECESS	1					
6	90201–08055	WASHER, PLATE	2					
7	90201–08116	WASHER, PLATE	1					
8	95702–08500	NUT, FLANGE	3					
9	95D32–08040	BOLT, FLANGE DEEP RECESS	1					
10	4D1–E4613–00	GASKET, EXHAUST PIPE	1					UR
	1GC–E4613–00	GASKET, EXHAUST PIPE	1					UR

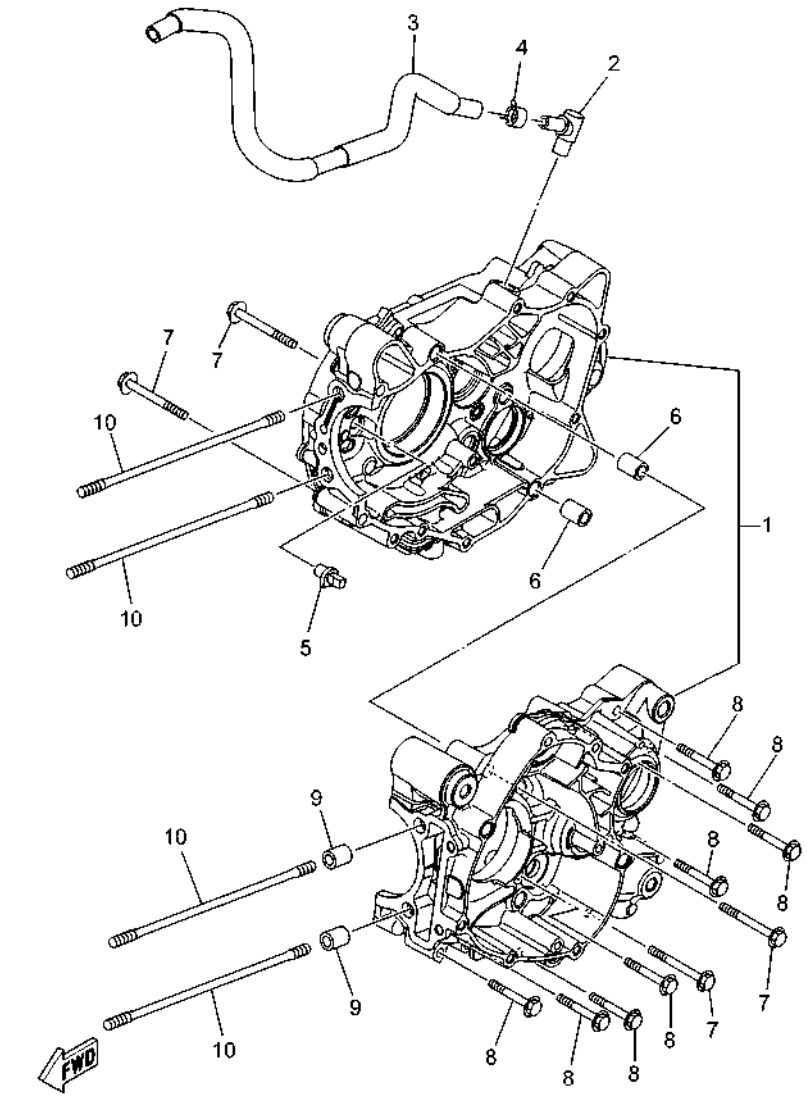

BKW1431-Z080

FIG. 8 CRANKCASE

REF. NO.	PART NO.	DESCRIPTION	BNT2					REMARKS
1	1FC–E5150–00	CRANKCASE ASSY	1					
2	5VT–E5371–00	BREATHER	1					
3	1FC–E1166–10	PIPE, BREATHER 1	1					
4	90467–13807	CLIP	1					
5	16S–E5155–00	NOZZLE 3	1					
6	91810–14808	PIN, DOWEL	2					
7	95E32–06055	BOLT, FLANGE DEEP RECESS	4					
8	95E32–06040	BOLT, FLANGE DEEP RECESS	8					
9	91810–14808	PIN, DOWEL	2					
10	90116–08850	BOLT, STUD	4					

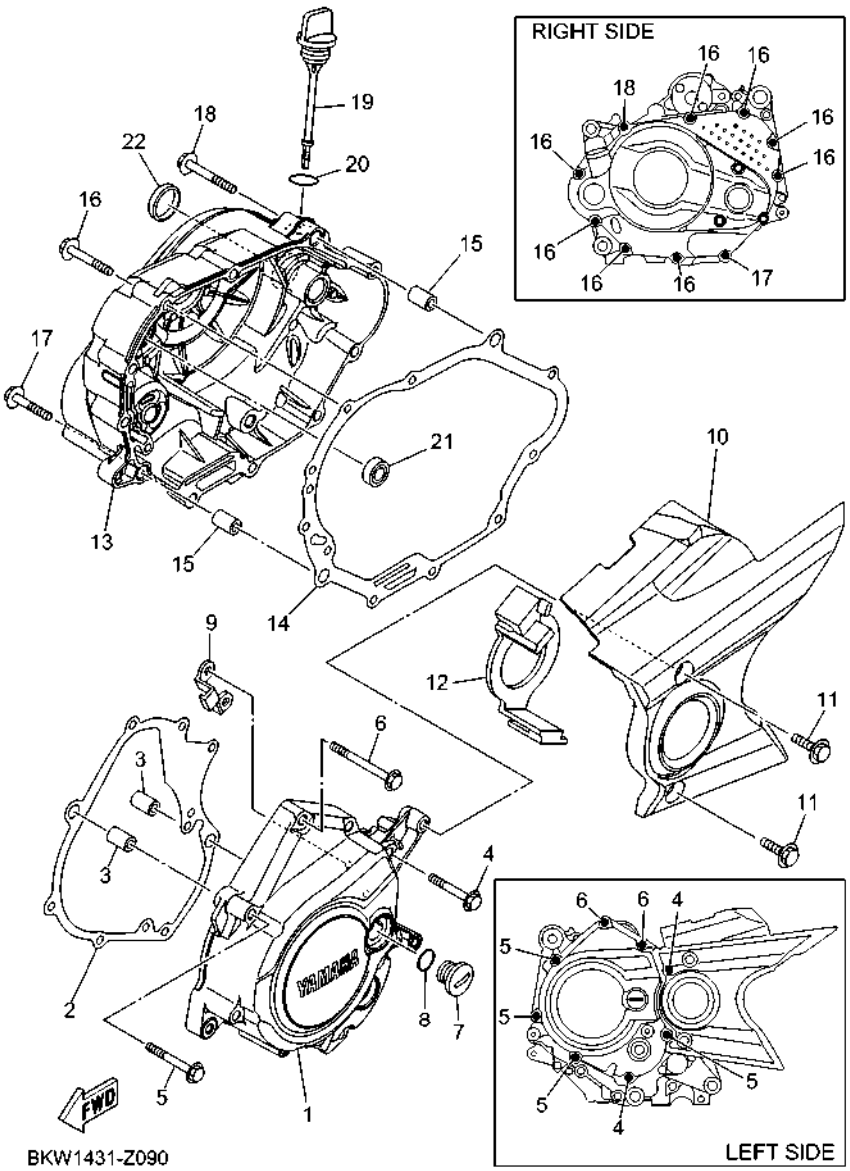

FIG. 9 CRANKCASE COVER 1

REF. NO.	PART NO.	DESCRIPTION	BNT2					REMARKS
1	BKW–E5411–00	COVER, CRANKCASE 1	1					
2	1FC–E5451–10	GASKET, CRANKCASE COVER 1	1					
3	91810–14808	PIN, DOWEL	2					
4	90105–06893	BOLT, FLANGE	2					
5	95E32–06050	BOLT, FLANGE DEEP RECESS	4					
6	95E32–06060	BOLT, FLANGE DEEP RECESS	2					
7	90340–14824	PLUG, STRAIGHT SCREW	1					
8	93210–14899	O-RING	1					
9	31C–E5113–00	PLATE	1					
10	BKW–E5418–00	COVER, CHAIN CASE	1					
11	95D02–06016	BOLT, FLANGE DEEP RECESS	2					
12	16S–E5377–01	GUIDE, INLET	1					
13	BKW–E5421–00	COVER, CRANKCASE 2	1					
14	1FC–E5461–10	GASKET, CRANKCASE COVER 2	1					
15	91810–14808	PIN, DOWEL	2					
16	95E32–06040	BOLT, FLANGE DEEP RECESS	8					
17	95E37–06030	BOLT, FLANGE DEEP RECESS	1					
18	95E32–06050	BOLT, FLANGE DEEP RECESS	1					
19	16S–E5362–10	PLUG, OIL LEVEL	1					
20	93210–19804	O-RING	1					UR
	93210–198F9	O-RING	1					UR
21	93101–10843	OIL SEAL	1					
22	90338–26136	PLUG	1					

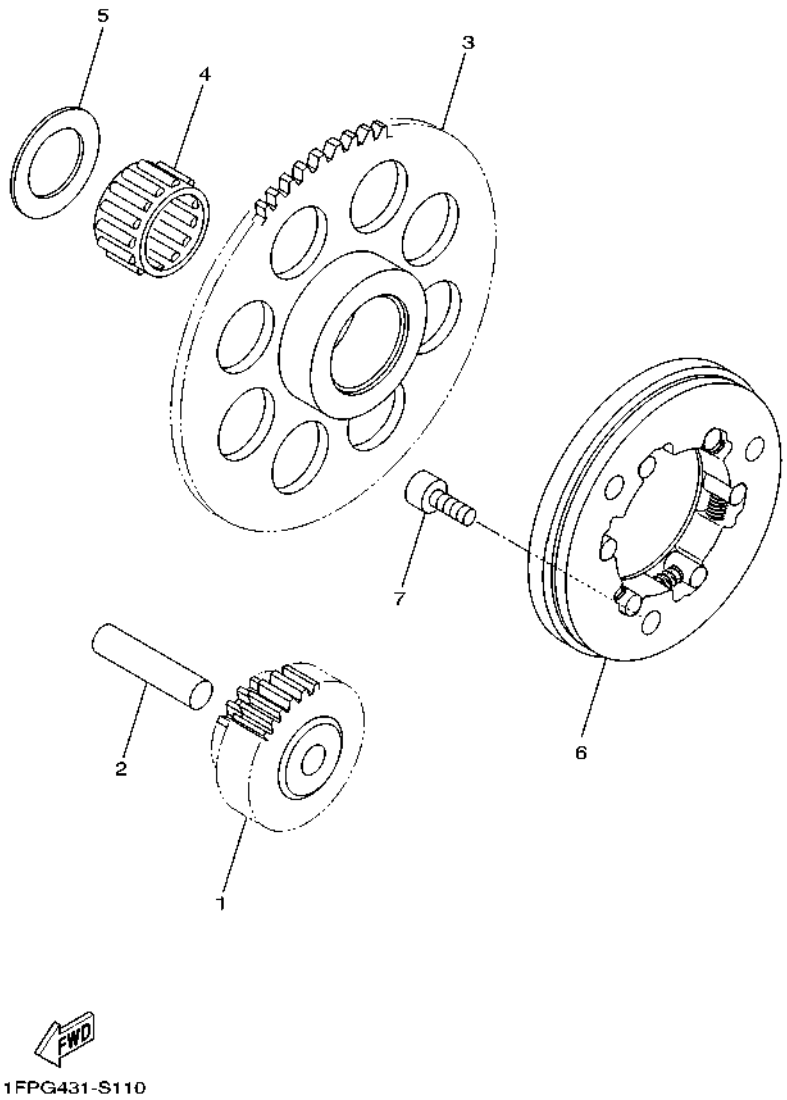

FIG. 10 STARTER CLUTCH

REF. NO.	PART NO.	DESCRIPTION	BNT2					REMARKS
1	2P2–E5512–00	GEAR, IDLER 1	1					
2	93608–34800	PIN, DOWEL	1					
3	1FC–E5524–00	WHEEL, STARTER	1					
4	93310–419X6	BEARING	1					
5	90201–19801	WASHER, PLATE	1					
6	5C6–E5580–01	STARTER CLUTCH OUTER ASSY	1					
7	91312–06012	BOLT, HEXAGON SOCKET HEAD	3					

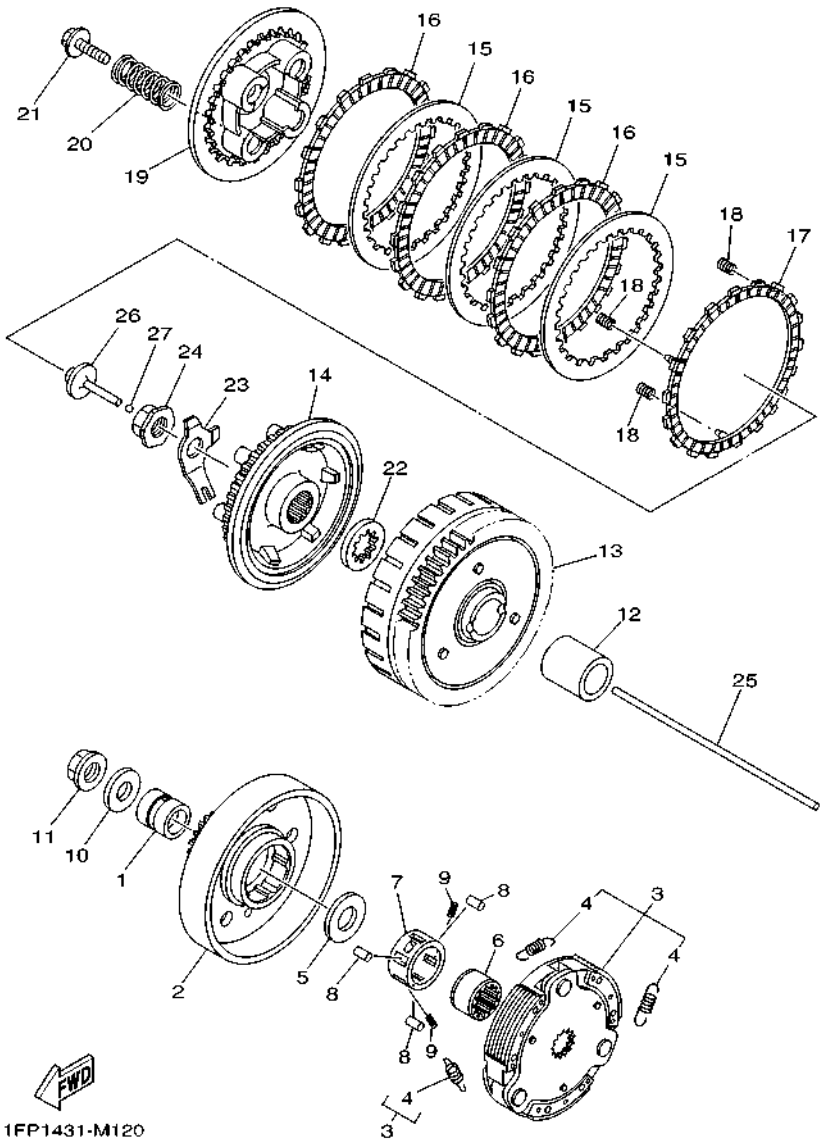

FIG. 11 CLUTCH

REF. NO.	PART NO.	DESCRIPTION	BNT2					REMARKS
1	1FC–E6116–00	COLLAR 1	1					
2	1FP–E6611–11	CLUTCH HOUSING COMP.	1					
3	1FP–E6620–01	CLUTCH CARRIER ASSY	1					
4	1FP–E6626–00	.SPRING, CLUTCH WEIGHT 1	3					
5	90201–167P7	WASHER, PLATE	1					
6	B6A–E6512–00	BOSS, CLUTCH HOUSING	1					
7	5D9–E6586–00	CAGE	1					UR
	B6A–E6586–00	CAGE	1					UR
8	93606–10800	PIN, DOWEL	3					
9	90501–04805	SPRING, COMPRESSION	2					
10	90201–12019	WASHER, PLATE	1					
11	90179–12802	NUT	1					
12	90387–20810	COLLAR	1					
13	1FP–E6150–01	PRIMARY DRIVEN GEAR COMP.	1					
14	1FP–E6371–10	BOSS, CLUTCH	1					
15	1FP–E6324–00	PLATE, CLUTCH 1	3					
16	1FP–E6321–10	PLATE, FRICTION	3					
17	1FP–E6320–10	PLATE, FRICTION 1	1					
18	1FP–E6383–20	SPRING.,CUSHION	3					
19	1FP–E6351–10	PLATE, PRESSURE 1	1					
20	1FP–E6333–00	SPRING, CLUTCH 1	4					
21	1FP–E6777–20	BOLT	4					
22	1S9–E6628–00	WASHER	1					
23	1FP–E6135–00	WASHER, LOCK	1					
24	90179–14001	NUT	1					
25	1FC–E6357–00	ROD, PUSH 2	1					
26	16S–E6356–00	ROD, PUSH 1	1					

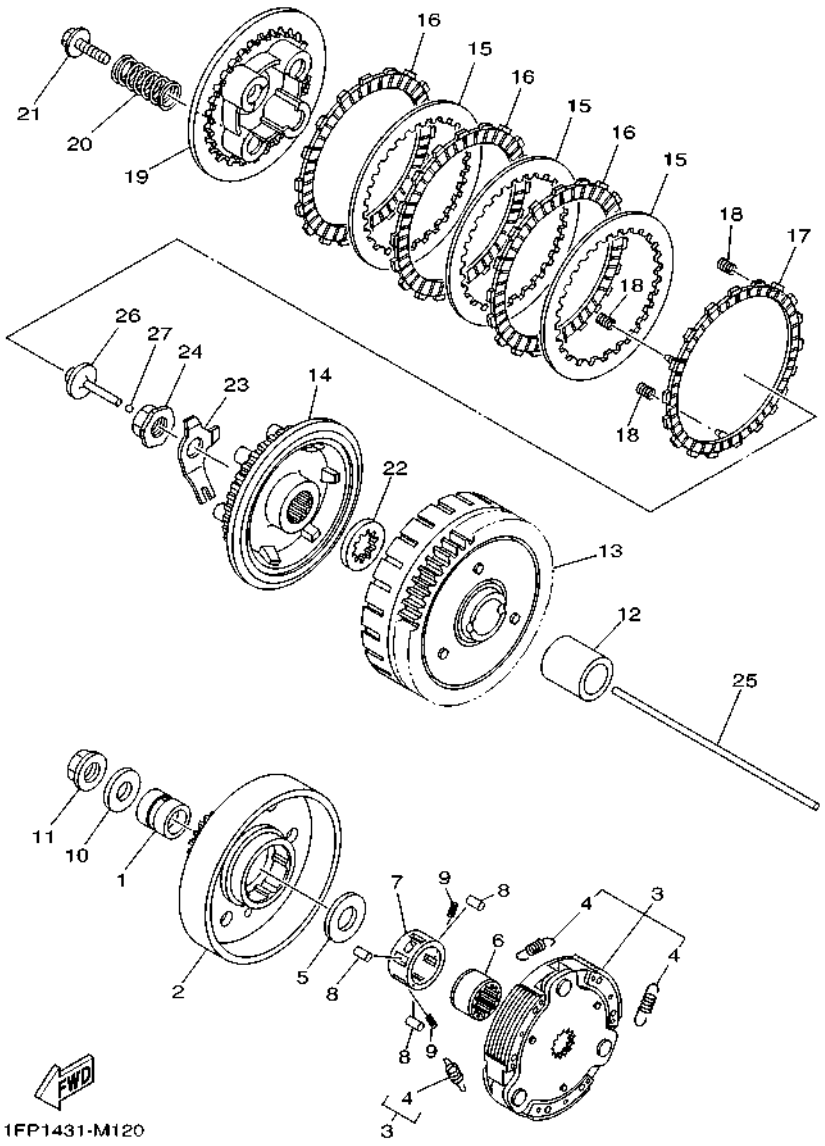

FIG. 11 CLUTCH

REF. NO.	PART NO.	DESCRIPTION	BNT2					REMARKS
27	93503–16807	BALL	1					

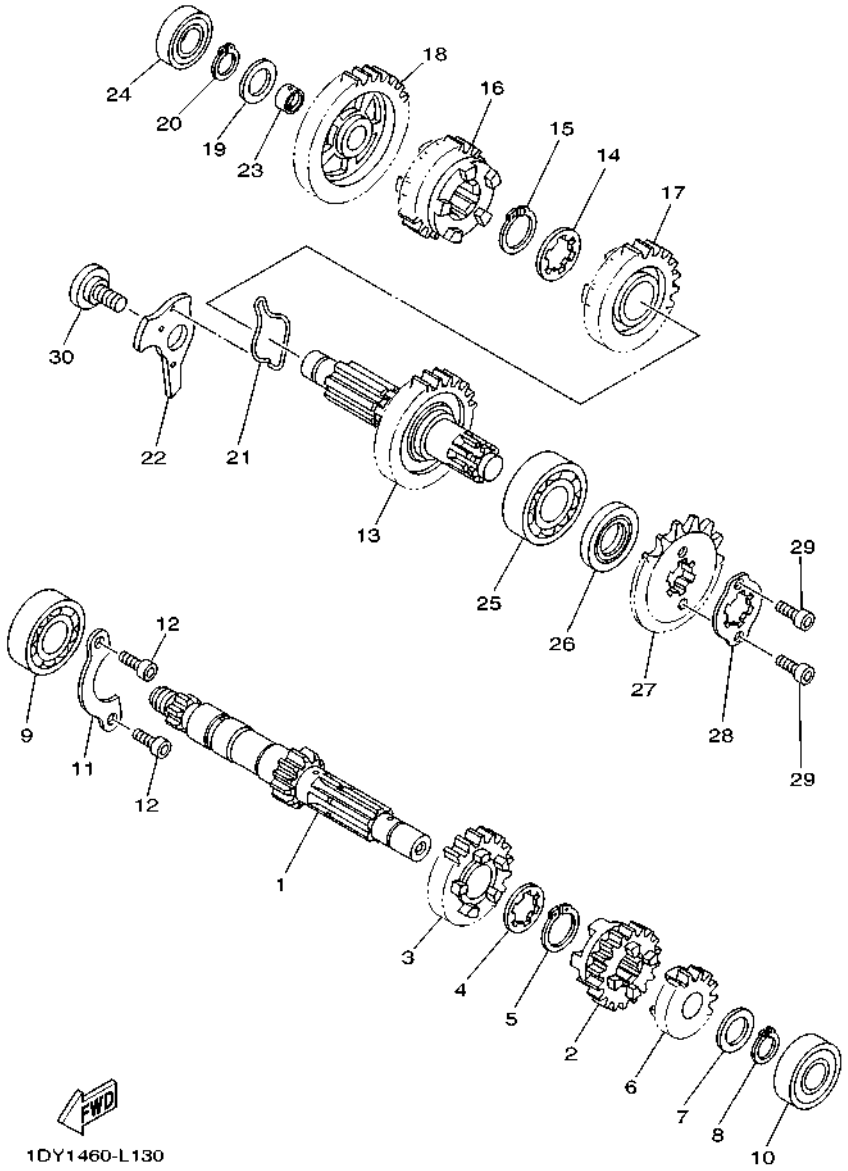

FIG. 12 TRANSMISSION

REF. NO.	PART NO.	DESCRIPTION	BNT2					REMARKS
1	1FC–E7411–10	AXLE, MAIN (12T)	1					
2	1FC–E7131–00	GEAR, 3RD PINION (17T)	1					
3	1FC–E7141–00	GEAR, 4TH PINION (22T)	1					
4	90209–17285	WASHER	1					
5	93410–20809	CIRCLIP	1					
6	1FC–E7121–10	GEAR, 2ND PINION (16T)	1					
7	90201–15700	WASHER, PLATE	1					
8	99009–15400	CIRCLIP	1					
9	93306–054Y2	BEARING	1					
10	93306–252XN	BEARING	1					
11	16S–E7471–00	PLATE, COVER	1					
12	91332–06012	BOLT	2					
13	1FC–E7402–10	DRIVE AXLE ASSY (30T)	1					
14	90209–18208	WASHER	1					
15	93410–22039	CIRCLIP	1					
16	1FC–E7241–00	GEAR, 4TH WHEEL (23T)	1					
17	1FC–E7231–00	GEAR, 3RD WHEEL (23T)	1					
18	1FC–E7211–10	GEAR, 1ST WHEEL (34T)	1					
19	90201–15700	WASHER, PLATE	1					
20	99009–15400	CIRCLIP	1					
21	1DY–E8545–00	SPRING	1					
22	1FC–E8561–00	PLATE, SIDE 1	1					
23	90387–15817	COLLAR	1					
24	93306–002XK	BEARING	1					
25	93306–254Y1	BEARING	1					
26	93102–20805	OIL SEAL	1					
27	93812–13837	SPROCKET, DRIVE (13T)	1					

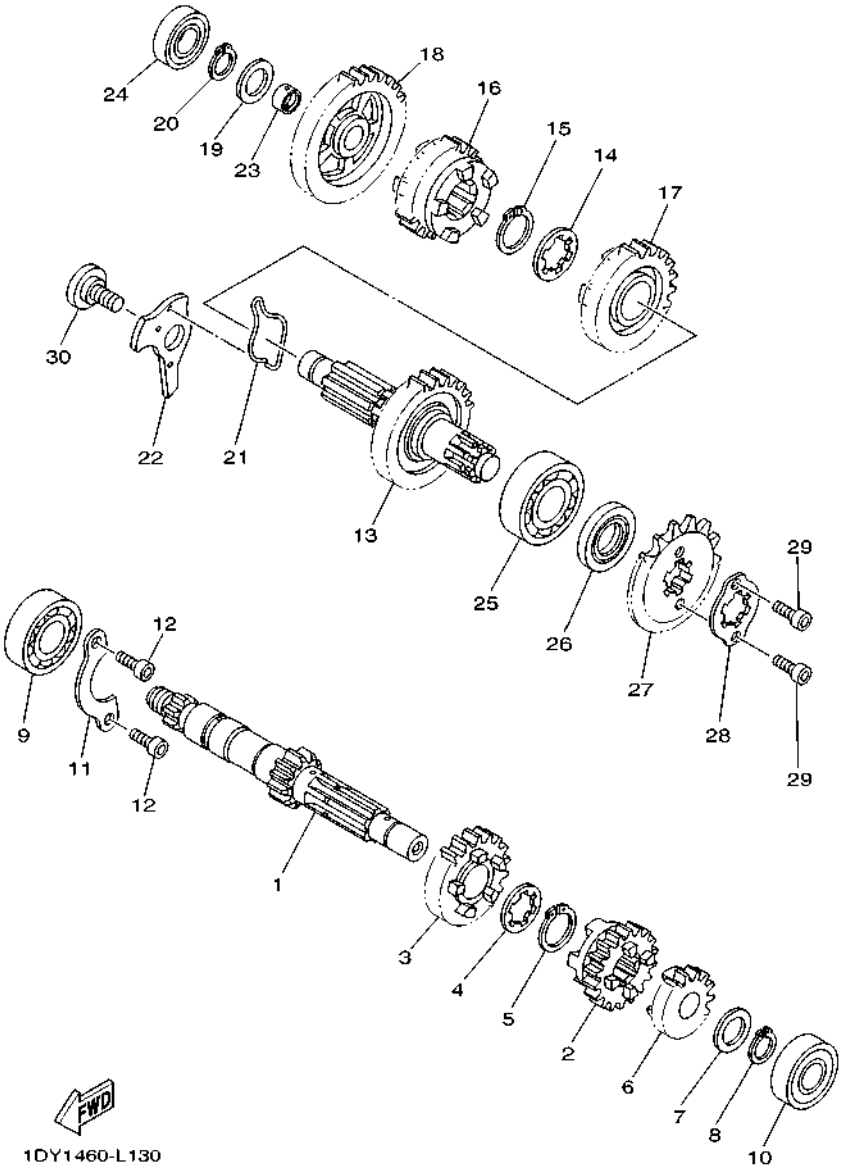

FIG. 12 TRANSMISSION

REF. NO.	PART NO.	DESCRIPTION	BNT2					REMARKS
28	1PB–E7456–00	HOLDER, SPROCKET	1					
29	91312–05010	BOLT, HEXAGON SOCKET HEAD	2					
30	16S–E8563–00	SCREW, STOPPER PLATE	1					

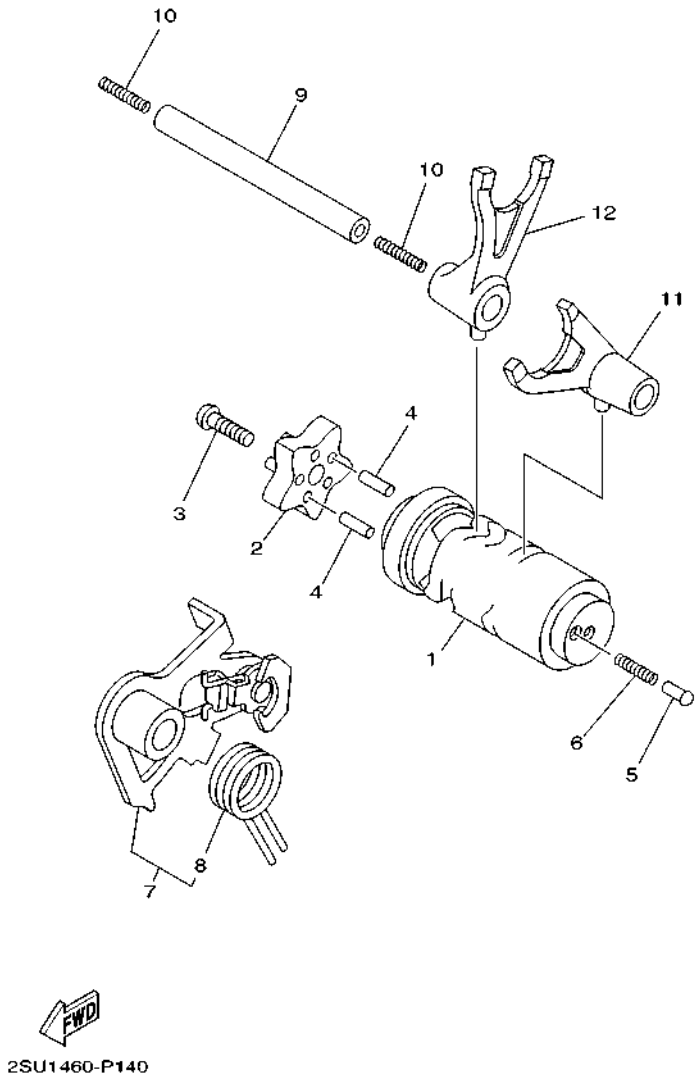

FIG. 13 SHIFT CAM & FORK

REF. NO.	PART NO.	DESCRIPTION	BNT2					REMARKS
1	2VP–E8540–00	SHIFT CAM ASSY	1					
2	2SU–E8185–00	SEGMENT	1					
3	90149–06159	SCREW	1					
4	93604–12800	PIN, DOWEL	2					
5	1FC–E8542–00	POINT, NEUTRAL	1					
6	90501–06022	SPRING, COMPRESSION	1					
7	1FC–E8120–00	SHIFT LEVER ASSY	1					
8	90508–26815	.SPRING, TORSION	1					
9	5VT–E8531–00	BAR, SHIFT FORK GUIDE 1	1					
10	90501–06800	SPRING, COMPRESSION	2					
11	1JD–E8511–00	FORK, SHIFT 1	1					
12	1JD–E8512–00	FORK, SHIFT 2	1					

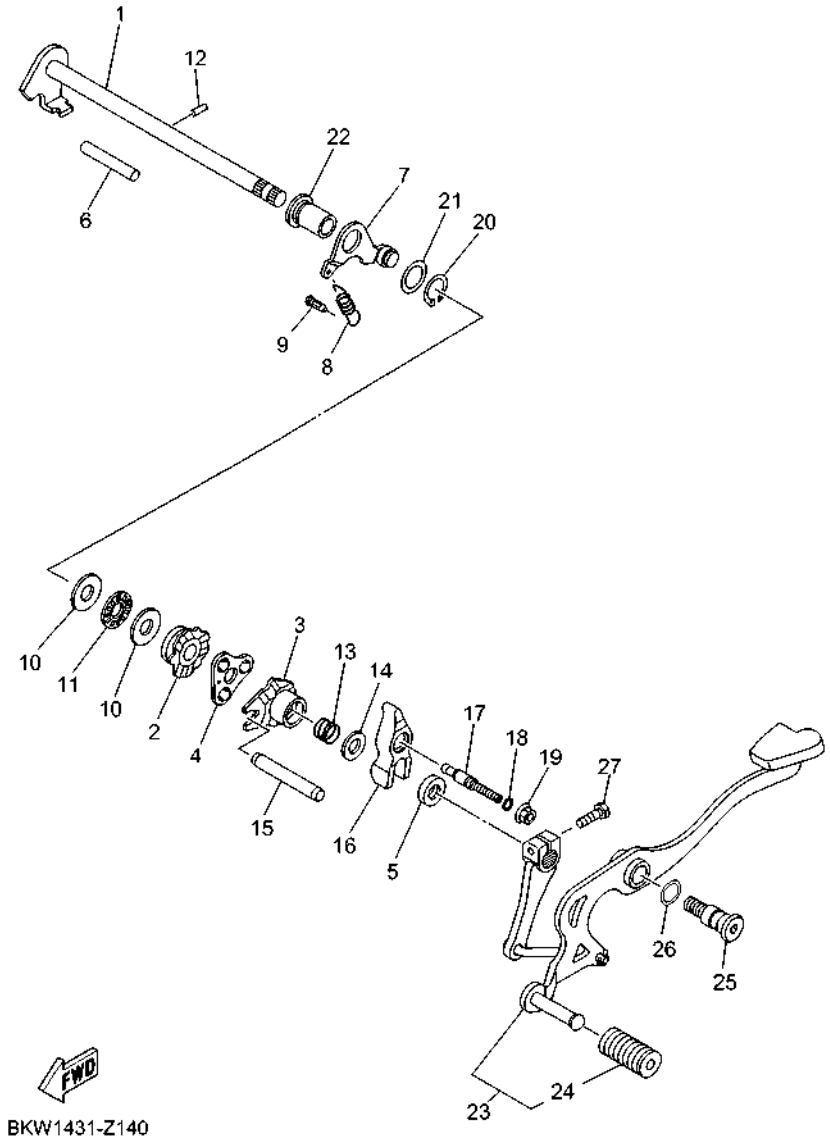

FIG. 14 SHIFT SHAFT

REF. NO.	PART NO.	DESCRIPTION	BNT2					REMARKS
1	1FP–E8101–00	SHIFT SHAFT ASSY	1					
2	1FP–E8179–01	GUIDE	1					
3	1FP–E8172–01	GUIDE, SHIFT	1					
4	1FP–E8181–00	HOLDER, PAWL	1					
5	93102–12808	OIL SEAL	1					
6	93608–50149	PIN, DOWEL	1					
7	BBK–E8140–00	STOPPER LEVER ASSY	1					
8	1FC–E8337–00	SPRING	1					
9	5VT–E6346–00	HOOK, SPRING	1					
10	90201–127F4	WASHER, PLATE	2					
11	93340–212Y2	BEARING	1					
12	93604–10801	PIN, DOWEL	1					
13	90501–125E9	SPRING, COMPRESSION	1					
14	90201–12824	WASHER, PLATE	1					
15	5VT–E8173–00	PIN, SHIFT	1					
16	1FD–E817A–00	ARM, SHIFT 3	1					
17	5D9–E8186–00	SCREW, ADJUSTING	1					
18	93210–06807	O-RING	1					
19	95702–06500	NUT, FLANGE	1					
20	99009–17400	CIRCLIP	1					
21	90201–178D3	WASHER, PLATE	1					
22	1FC–E8699–00	BOSS 1	1					
23	BKW–E8110–00	SHIFT PEDAL ASSY	1					
24	5HU–E8113–00	.COVER, SHIFT PEDAL	1					
25	BKW–F7261–00	SHAFT	1					
26	90206–14001	WASHER, WAVE	1					
27	97012–06020	BOLT	1					

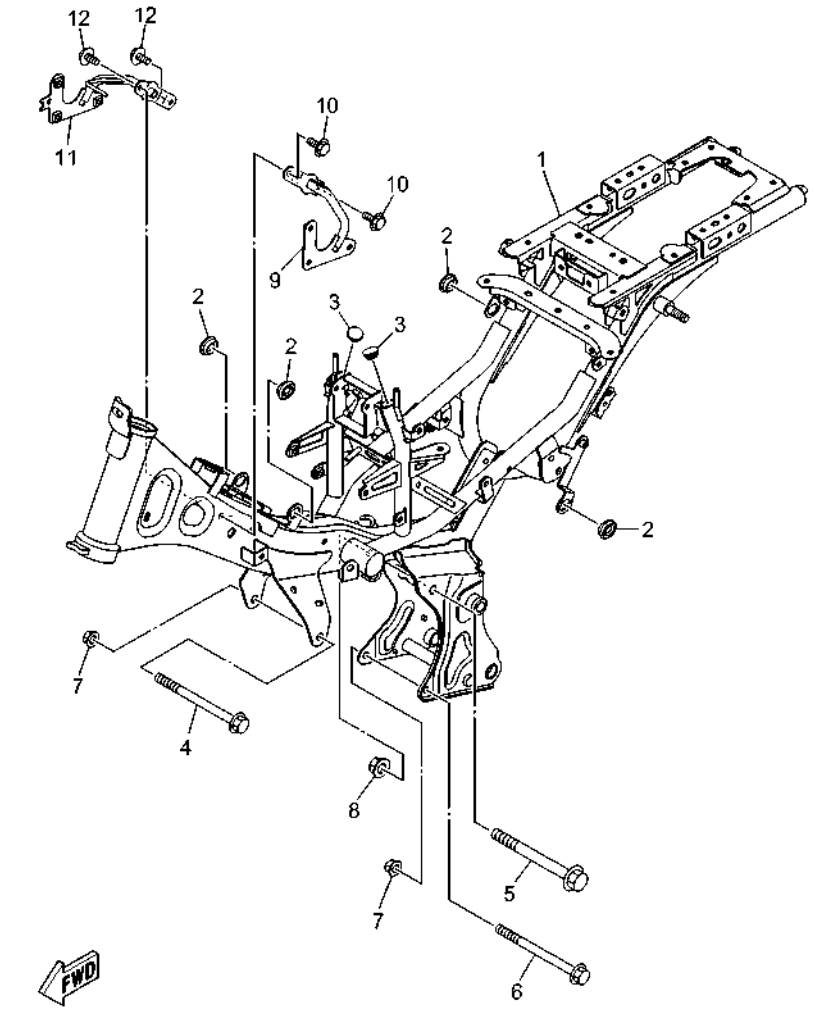

BKW1431-Z150

FIG. 15 FRAME

REF. NO.	PART NO.	DESCRIPTION	BNT2					REMARKS
1	BKW–F1110–00	FRAME COMP.	1					
2	90480–01558	GROMMET	4					
3	90338–15821	PLUG	2					
4	90105–088E0	BOLT, FLANGE	1					
5	95D32–10120	BOLT, FLANGE DEEP RECESS	1					
6	90105–088D9	BOLT, FLANGE	1					
7	90179–08818	NUT	2					
8	90179–10805	NUT	1					
9	BKW–F8321–00	STAY 1	1					
10	95D32–06012	BOLT, FLANGE DEEP RECESS	2					
11	BKW–F8322–00	STAY 2	1					
12	95D32–06012	BOLT, FLANGE DEEP RECESS	2					

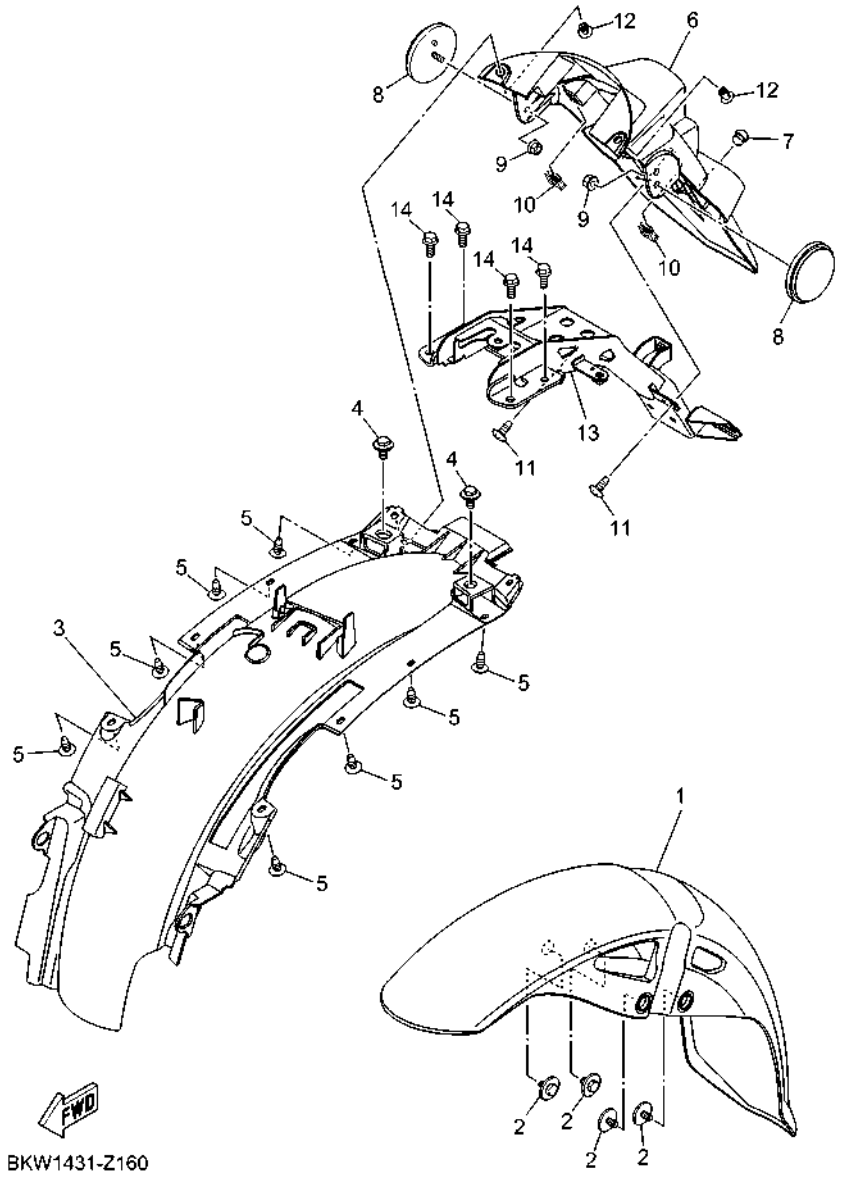

FIG. 16 FENDER

REF. NO.	PART NO.	DESCRIPTION	BNT2					REMARKS
1	BKW–F1511–00–P6	FENDER, FRONT	1					UR FOR MNBM9
	BKW–F1511–00–PA	FENDER, FRONT	1					UR FOR SMX
2	90119–06885	BOLT, WITH WASHER	4					
3	BKW–F1611–00	FENDER, REAR	1					
4	90109–068B5	BOLT	2					
5	97707–50012	SCREW, TRUSS HEAD TAPPING	8					
6	BKW–F1629–00	GUARD, MUD	1					
7	BAX–F1717–00	DAMPER	1					UR
	B5V–F1717–00	DAMPER	1					UR
8	2FC–H5111–00	REFLECTOR, 1	2					UR
	BSM–H5111–00	REFLECTOR, 1	2					UR
9	90185–05803	NUT, SELF-LOCKING	2					
10	90183–05807	NUT, SPRING	2					
11	97702–50012	SCREW,TAPPING	2					
12	90269–06816	RIVET	2					
13	BKW–F164F–00	STAY 1	1					
14	95D32–06016	BOLT, FLANGE DEEP RECESS	4					

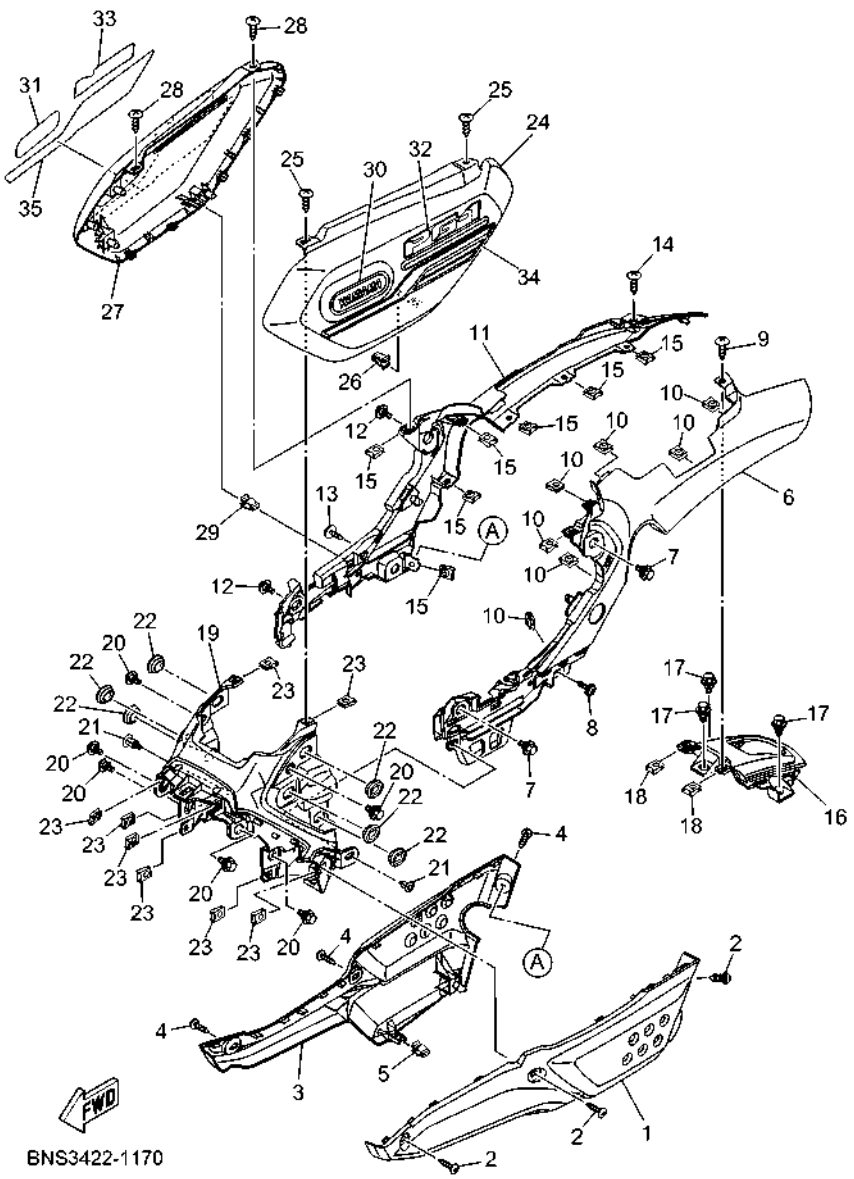

FIG. 17 SIDE COVER

REF. NO.	PART NO.	DESCRIPTION	BNT2					REMARKS
1	BKW–F1711–00	COVER, SIDE 1	1					
2	97707–50012	SCREW, TRUSS HEAD TAPPING	3					
3	BKW–F1721–00	COVER, SIDE 2	1					
4	97707–50012	SCREW, TRUSS HEAD TAPPING	3					
5	90464–07018	CLAMP	1					
6	BKW–F1731–00–P0	COVER, SIDE 3	1					MDNM6
7	90109–068B5	BOLT	2					
8	90159–06838	SCREW, WITH WASHER	1					
9	97707–50012	SCREW, TRUSS HEAD TAPPING	1					
10	90183–05807	NUT, SPRING	7					
11	BKW–F1741–00–P0	COVER, SIDE 4	1					MDNM6
12	90109–068B5	BOLT	2					
13	90159–06838	SCREW, WITH WASHER	1					
14	97707–50012	SCREW, TRUSS HEAD TAPPING	1					
15	90183–05807	NUT, SPRING	7					
16	BKW–F171E–00–P0	COVER, SIDE 5	1					MDNM6
17	90109–068B5	BOLT	3					
18	90183–05807	NUT, SPRING	2					
19	BKW–F171A–00	COVER, TOP	1					
20	90109–068B5	BOLT	6					
21	90269–06816	RIVET	2					
22	90480–01559	GROMMET	6					
23	90183–05807	NUT, SPRING	8					
24	BKW–F1716–00–P6	LID, SIDE COVER	1					UR FOR MNBM9
	BKW–F1716–00–PA	LID, SIDE COVER	1					UR FOR SMX
25	97707–50012	SCREW, TRUSS HEAD TAPPING	2					
26	90464–07018	CLAMP	1					

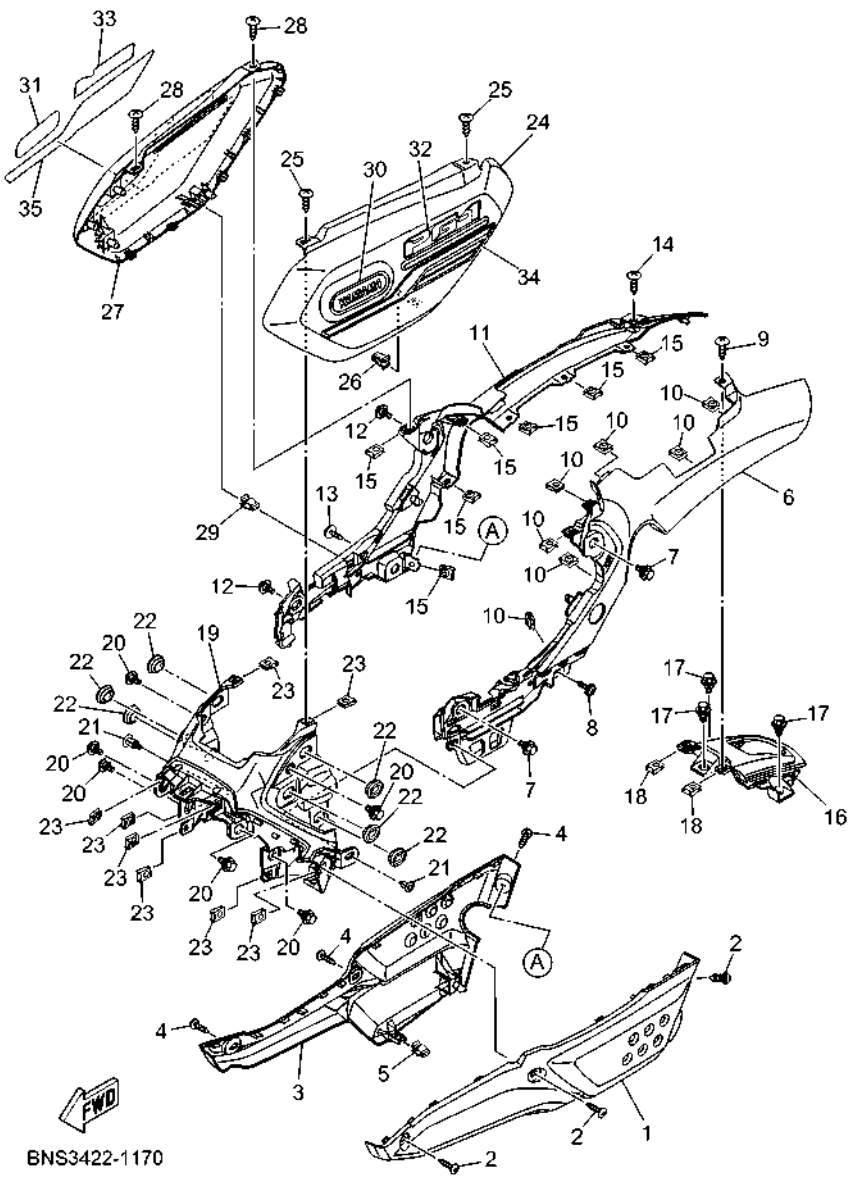

FIG. 17 SIDE COVER

REF. NO.	PART NO.	DESCRIPTION	BNT2					REMARKS
27	BKW–F1726–00–P6	LID, SIDE COVER 2	1					UR FOR MNBM9
	BKW–F1726–00–PA	LID, SIDE COVER 2	1					UR FOR SMX
28	97707–50012	SCREW, TRUSS HEAD TAPPING	2					
29	90464–07018	CLAMP	1					
30	BKW–F8368–00	EMBLEM	1					
31	BKW–F8368–00	EMBLEM	1					
32	BNS–F174G–00	GRAPHIC 3	1					UR FOR MNBM9
	BNS–F174G–30	GRAPHIC 3	1					UR FOR SMX
33	BNS–F174G–00	GRAPHIC 3	1					UR FOR MNBM9
	BNS–F174G–30	GRAPHIC 3	1					UR FOR SMX
34	BNS–F173X–00	GRAPHIC 7	1					UR FOR MNBM9
	BNS–F173X–30	GRAPHIC 7	1					UR FOR SMX
35	BNS–F173Y–00	GRAPHIC 8	1					UR FOR MNBM9
	BNS–F173Y–30	GRAPHIC 8	1					UR FOR SMX

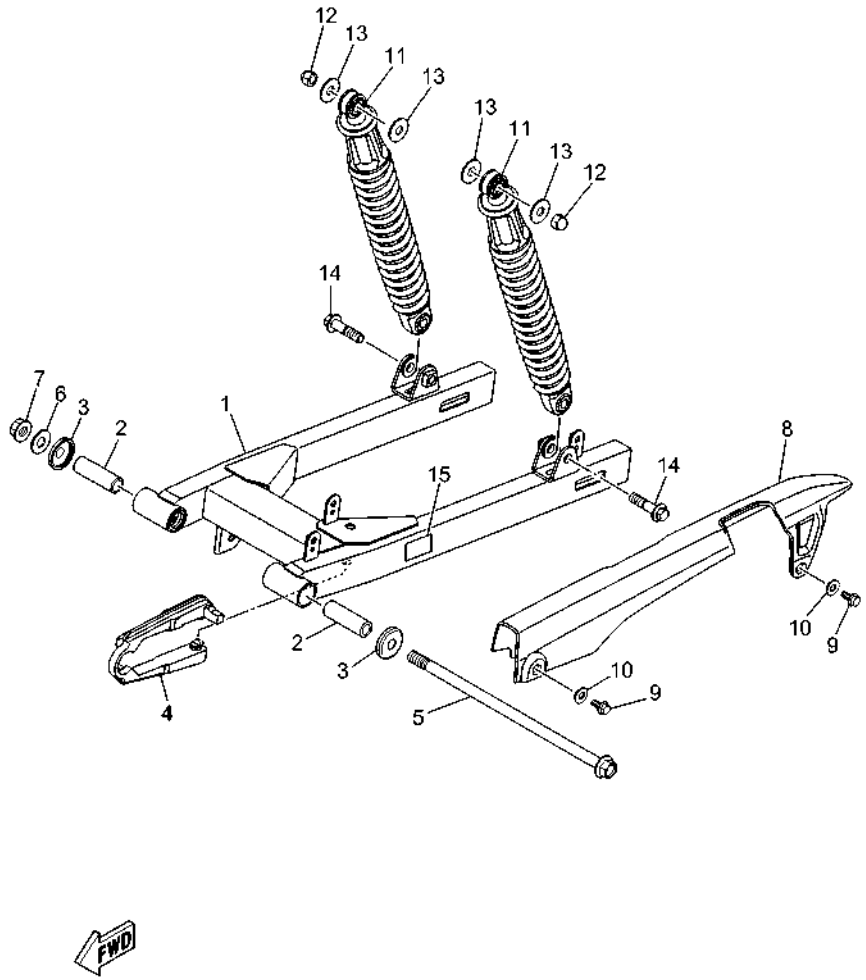

BKW1431-Z180

FIG. 18 REAR ARM & SUSPENSION

REF. NO.	PART NO.	DESCRIPTION	BNT2					REMARKS
1	BNT–F2100–00	REAR ARM ASSY	1					
2	90387–12874	COLLAR	2					
3	5BP–F2129–02	COVER, THRUST 2	2					
4	BKW–F2151–00	SEAL, GUARD	1					
5	BKW–F2141–00	SHAFT, PIVOT	1					
6	90201–12190	WASHER, PLATE	1					
7	95602–12200	NUT, SELF-LOCKING	1					
8	BKW–F2311–00	CASE, CHAIN	1					
9	95D32–06014	BOLT, FLANGE DEEP RECESS	2					
10	90387–068S1	COLLAR	2					
11	BKW–F2210–00	SHOCK ABSORBER ASSY, REAR	2					
12	95307–10800	NUT	2					
13	90201–10141	WASHER, PLATE	4					
14	90105–10878	BOLT, FLANGE	2					
15	BNT–F1668–00	LABEL, TIRE	1					

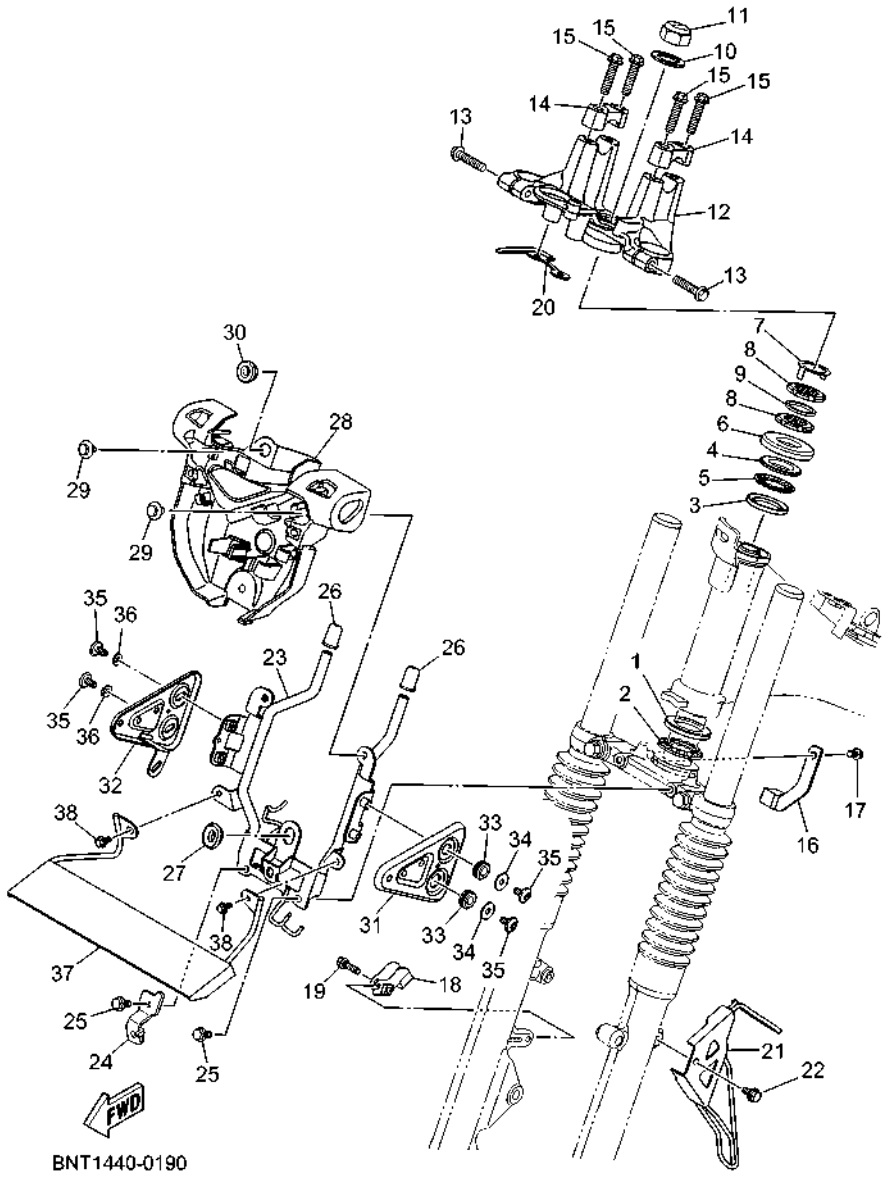

FIG. 19 STEERING

REF. NO.	PART NO.	DESCRIPTION	BNT2					REMARKS
1	1KL–F3412–10	RACE, BALL 2	1					
2	5VL–F341E–10	RETAINER, BALL BEARING	1					
3	4RT–F3412–10	RACE, BALL 2	1					
4	4RT–F3411–10	RACE, BALL 1	1					
5	1P6–F341E–10	RETAINER, BALL BEARING	1					
6	5P1–F3416–01	COVER, BALL RACE 2	1					
7	1SK–F3418–00	WASHER, SPECIAL	1					
8	90179–25615	NUT	2					
9	90202–26142	WASHER, PLATE	1					
10	90201–220T0	WASHER, PLATE	1					
11	90176–22081	NUT, CAP	1					
12	BKW–F3435–00	CROWN, HANDLE	1					
13	90105–088K3	BOLT, FLANGE	2					
14	BKW–F3441–00	HOLDER, HANDLE UPPER	2					
15	90105–088J8	BOLT, FLANGE	4					
16	BKW–F5875–00	HOLDER, BRAKE HOSE 1	1					
17	95E32–06010	BOLT, FLANGE DEEP RECESS	1					
18	BKW–F5876–00	HOLDER, BRAKE HOSE 2	1					
19	95E32–06020	BOLT, FLANGE DEEP RECESS	1					
20	BKW–F3874–01	HOLDER, WIRE	1					
21	BKW–F3317–00	HOLDER, CABLE	1					
22	95D37–06012	BOLT, FLANGE DEEP RECESS	1					
23	BNT–F3174–00	STAY, HEADLIGHT	1					
24	BKW–F3377–00	BRACKET, HORN	1					
25	95D37–06014	BOLT, FLANGE DEEP RECESS	2					
26	BKW–F317J–00	DAMPER 1	2					
27	90480–01558	GROMMET	1					

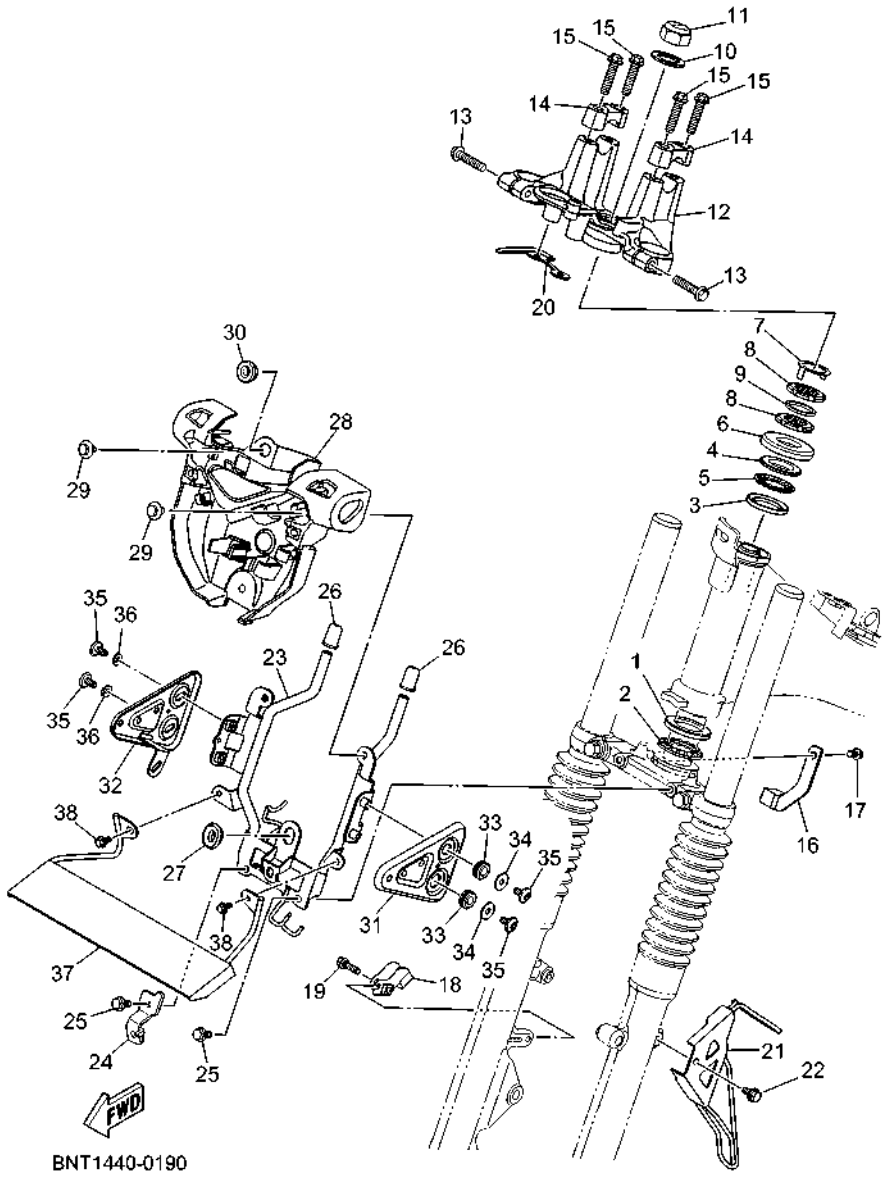

FIG. 19 STEERING

REF. NO.	PART NO.	DESCRIPTION	BNT2					REMARKS
28	BKW–F3123–00	COVER, UNDER 1	1					
29	90109–068B4	BOLT	2					
30	90480–13567	GROMMET	1					
31	BKW–F3121–00	COVER, UPPER 1	1					
32	BKW–F3131–01	COVER, UPPER 2	1					
33	90480–13815	GROMMET	2					
34	90201–06557	WASHER, PLATE	2					
35	90111–06119	BOLT, HEXAGON SOCKET BUTTON	4					
36	90201–06557	WASHER, PLATE	2					
37	BNT–F3487–00	STAY, PLATE	1					
38	95D37–06010	BOLT, FLANGE DEEP RECESS	2					

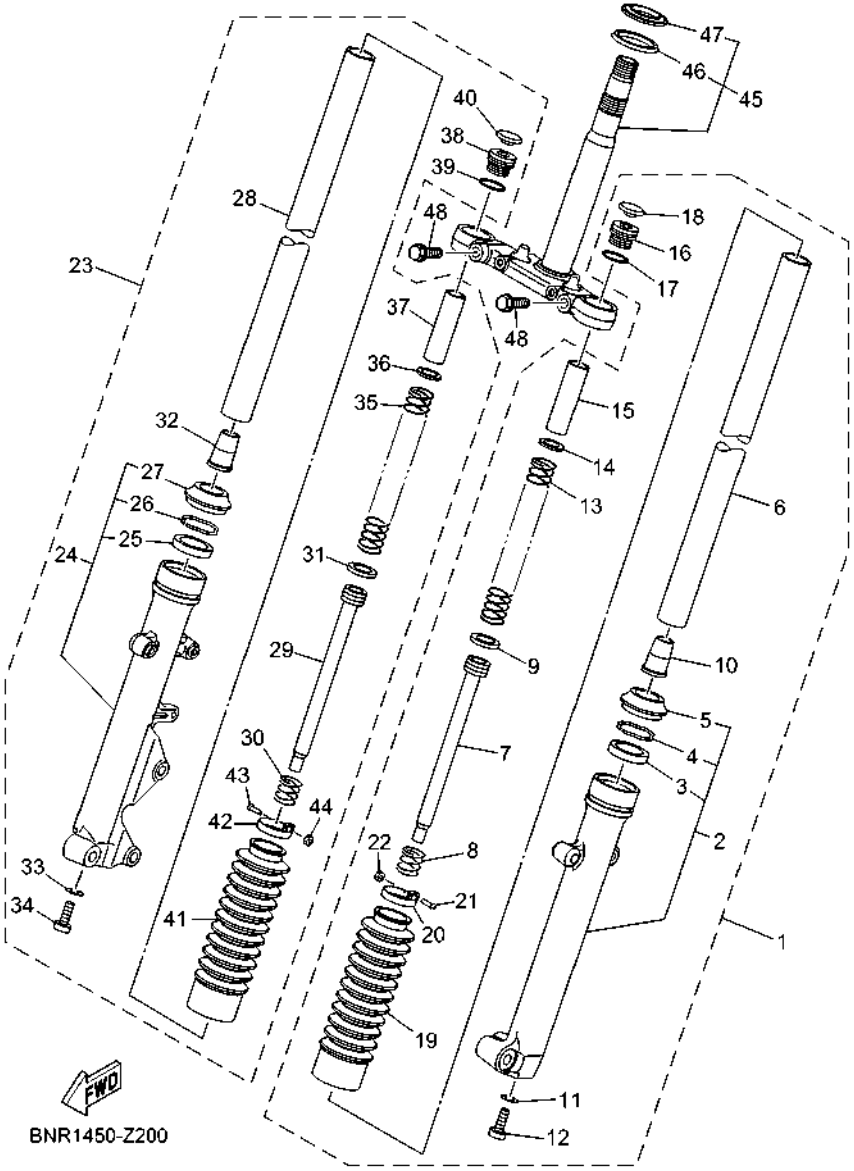

FIG. 20 FRONT FORK

REF. NO.	PART NO.	DESCRIPTION	BNT2					REMARKS
1	BNT–F3102–00	FRONT FORK ASSY (L.H)	1					
2	BNT–F3126–00	.TUBE, OUTER (L.H)	1					
3	2FS–F3145–00	..OIL SEAL	1					
4	3V3–F3156–00	..RING, SNAP	1					
5	2FS–F3144–00	..SEAL, DUST	1					
6	BNT–F3110–00	.INNER TUBE COMP.1	1					
7	BNT–F3170–00	.CYLINDER COMP., FRONT FORK	1					
8	BNT–F3152–00	.SPRING, SUB	1					
9	BNT–F3157–00	.RING, PISTON	1					
10	BNT–F3173–00	.SPINDLE, TAPER	1					
11	509–F3158–L0	.GASKET	1					
12	31D–F3181–50	.BOLT, HEXAGON SOCKET HEAD	1					
13	BNT–F3141–00	.SPRING, FRONT FORK	1					
14	3XL–F3146–10	.WASHER, OIL SEAL	1					
15	BNT–F3118–00	.SPACER	1					
16	3XX–F3111–00	.BOLT, CAP	1					
17	3XX–F3114–00	.GASKET	1					
18	3XX–F3168–00	.CAP, FRONT FORK	1					
19	BKW–F3191–00	.BOOT	1					
20	BKW–F3192–00	.BAND	1					
21	BKW–F3194–00	.SCREW, BOOT BAND	1					
22	BKW–F3357–00	.NUT	1					
23	BNT–F3103–00	FRONT FORK ASSY (R.H)	1					
24	BNT–F3136–00	.TUBE, OUTER 2	1					
25	2FS–F3145–00	..OIL SEAL	1					
26	3V3–F3156–00	..RING, SNAP	1					
27	2FS–F3144–00	..SEAL, DUST	1					

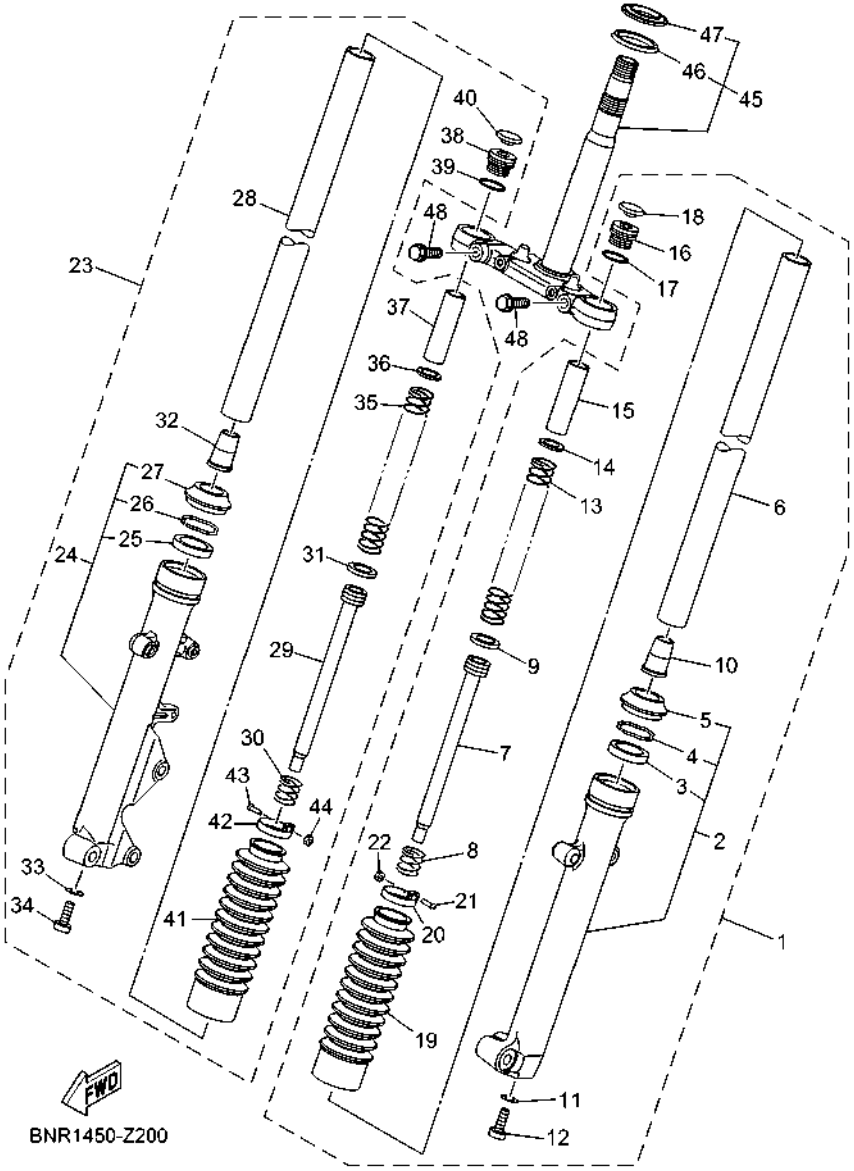

FIG. 20 FRONT FORK

REF. NO.	PART NO.	DESCRIPTION	BNT2					REMARKS
28	BNT–F3110–00	.INNER TUBE COMP.1	1					
29	BNT–F3170–00	.CYLINDER COMP., FRONT FORK	1					
30	BNT–F3152–00	.SPRING, SUB	1					
31	BNT–F3157–00	.RING, PISTON	1					
32	BNT–F3173–00	.SPINDLE, TAPER	1					
33	509–F3158–L0	.GASKET	1					
34	31D–F3181–50	.BOLT, HEXAGON SOCKET HEAD	1					
35	BNT–F3141–00	.SPRING, FRONT FORK	1					
36	3XL–F3146–10	.WASHER, OIL SEAL	1					
37	BNT–F3118–00	.SPACER	1					
38	3XX–F3111–00	.BOLT, CAP	1					
39	3XX–F3114–00	.GASKET	1					
40	3XX–F3168–00	.CAP, FRONT FORK	1					
41	BKW–F3191–00	.BOOT	1					
42	BKW–F3192–00	.BAND	1					
43	BKW–F3194–00	.SCREW, BOOT BAND	1					
44	BKW–F3357–00	.NUT	1					
45	BNT–F334M–00	UNDER BRACKET ASSY.	1					
46	5YY–F3462–00	.SEAL, DUST	1					
47	4FP–F3411–10	.RACE, BALL 1	1					
48	5HH–F3346–00	BOLT 1	2					

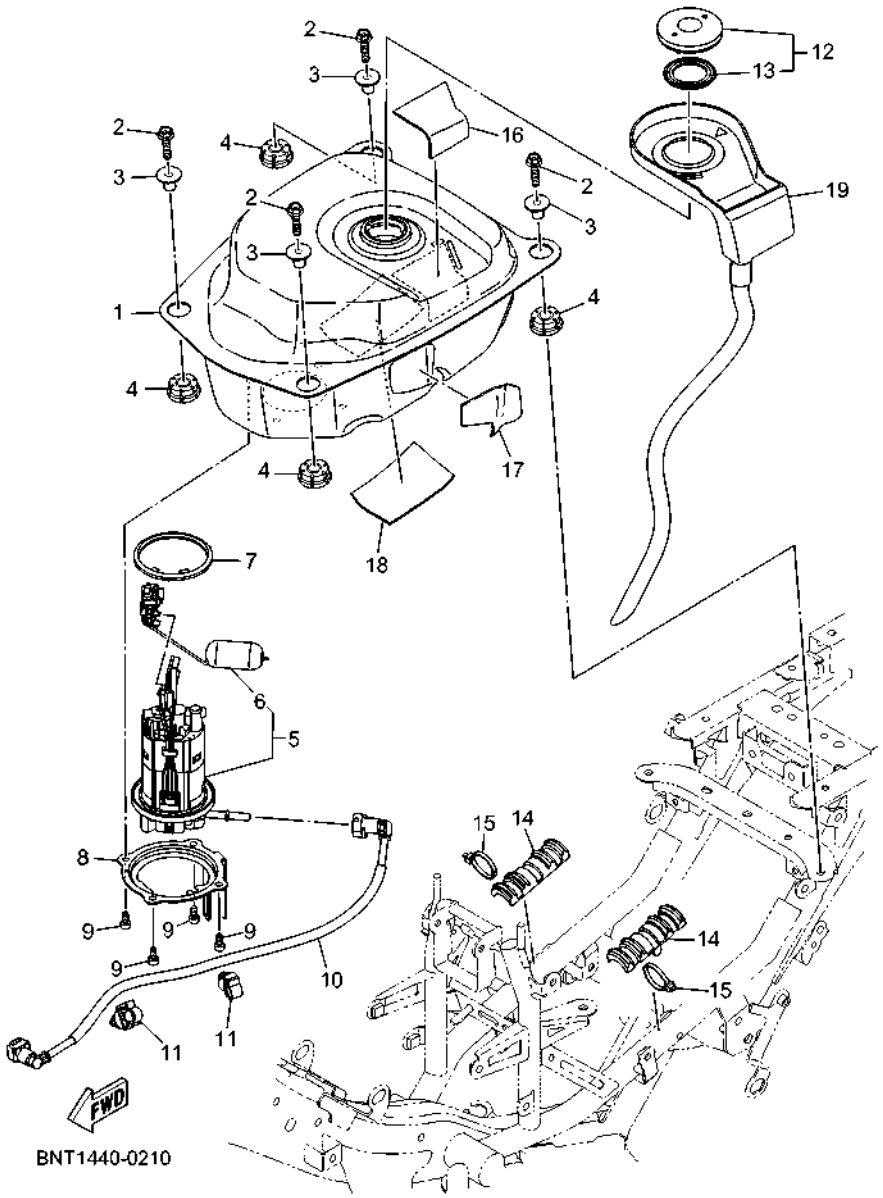

FIG. 21 FUEL TANK

REF. NO.	PART NO.	DESCRIPTION	BNT2					REMARKS
1	BKW–F4110–00	FUEL TANK COMP.	1					
2	95D32–06025	BOLT, FLANGE DEEP RECESS	4					
3	1FC–F412G–00	COLLAR	4					
4	1FC–F4339–00	GROMMET	4					
5	BKW–E3907–00	FUEL PUMP COMP.	1					
6	BKW–H5752–00	.SENDER	1					
7	1DB–F414G–01	SEAL	1					
8	BKW–F4491–00	BRACKET, FUEL PUMP	1					
9	91332–05010	BOLT	4					
10	BKW–E3971–00	PIPE, FUEL 1	1					
11	90464–10008	CLAMP	2					
12	4YY–F4610–00	CAP ASSY	1					
13	4YY–F4612–00	.PACKING, CAP	1					
14	BKW–F4181–00	DAMPER, LOCATING 1	2					
15	90464–36800	CLAMP	2					
16	BKW–F414H–00	DAMPER, PLATE 1	1					
17	BKW–F414J–00	DAMPER, PLATE 2	1					
18	90520–02803	DAMPER, PLATE	1					
19	BKW–F41B1–00	COVER, TANK	1					

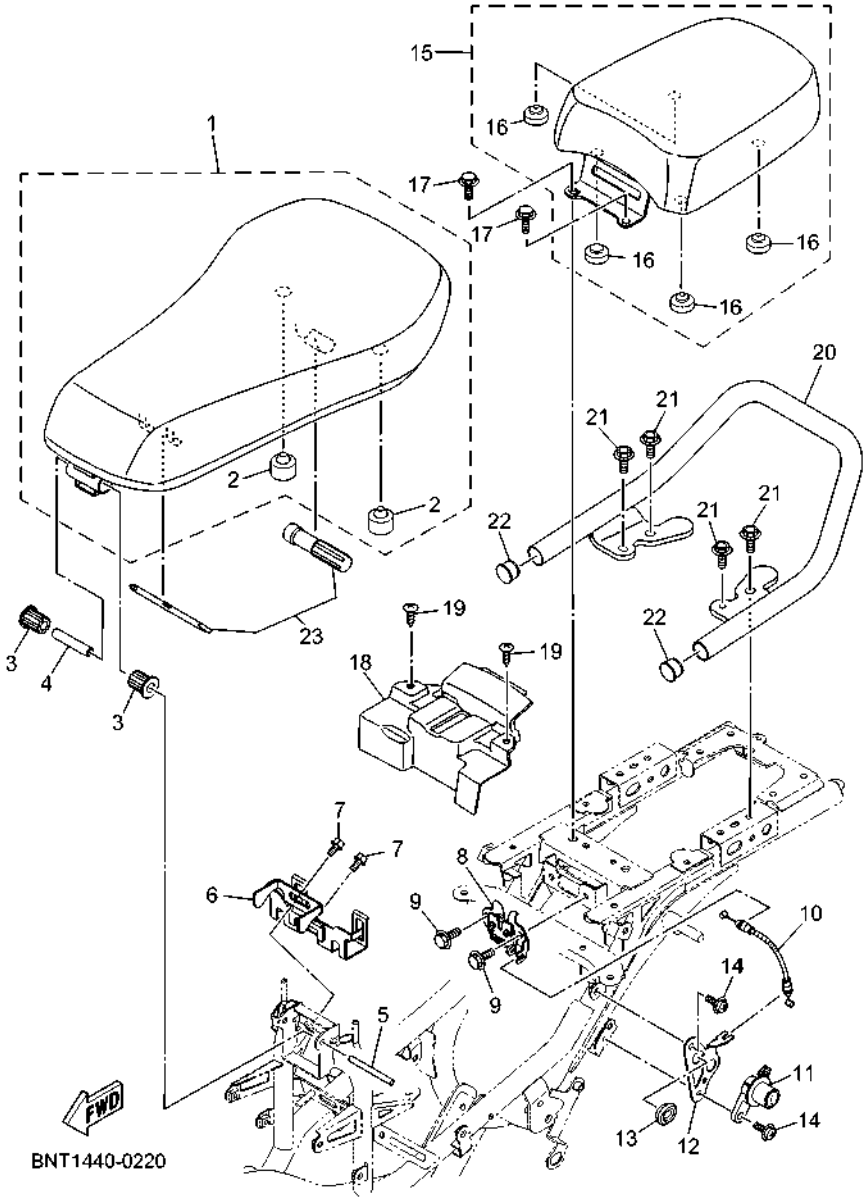

FIG. 22 SEAT

REF. NO.	PART NO.	DESCRIPTION	BNT2					REMARKS
1	BKW–F4710–00	SINGLE SEAT ASSY	1					
2	BKW–F4741–00	.PAD, SEAT	2					
3	BKW–F4723–00	DAMPER, SEAT	2					
4	BKW–F476F–00	PIN, GUIDE	1					
5	BKW–F4727–00	PIN, SEAT FITTING	1					
6	BKW–F4662–00	STAY	1					
7	95D02–06012	BOLT, FLANGE DEEP RECESS	2					
8	B5V–F4780–10	SEAT LOCK ASSY	1					
9	95022–06012	BOLT, FLANGE	2					
10	BKW–F478E–00	CABLE, SEAT LOCK	1					
11	BKW–F4799–00	ROTOR ASSY	1					
12	BKW–F117K–00	STAY, LOCK	1					
13	90480–01558	GROMMET	1					
14	90159–06855	SCREW, WITH WASHER	2					
15	BKW–F4750–00	TANDEM SEAT ASSY	1					
16	16S–F4741–10	.PAD, SEAT	4					
17	95022–08014	BOLT, FLANGE	2					
18	BKW–F472T–00	COVER, SEAT LOCK	1					
19	97707–50012	SCREW, TRUSS HEAD TAPPING	2					
20	BKW–F4773–00	HANDLE, SEAT	1					
21	95D32–06016	BOLT, FLANGE DEEP RECESS	4					
22	90338–18122	PLUG	2					
23	BNT–F8100–00	TOOL KIT	1					

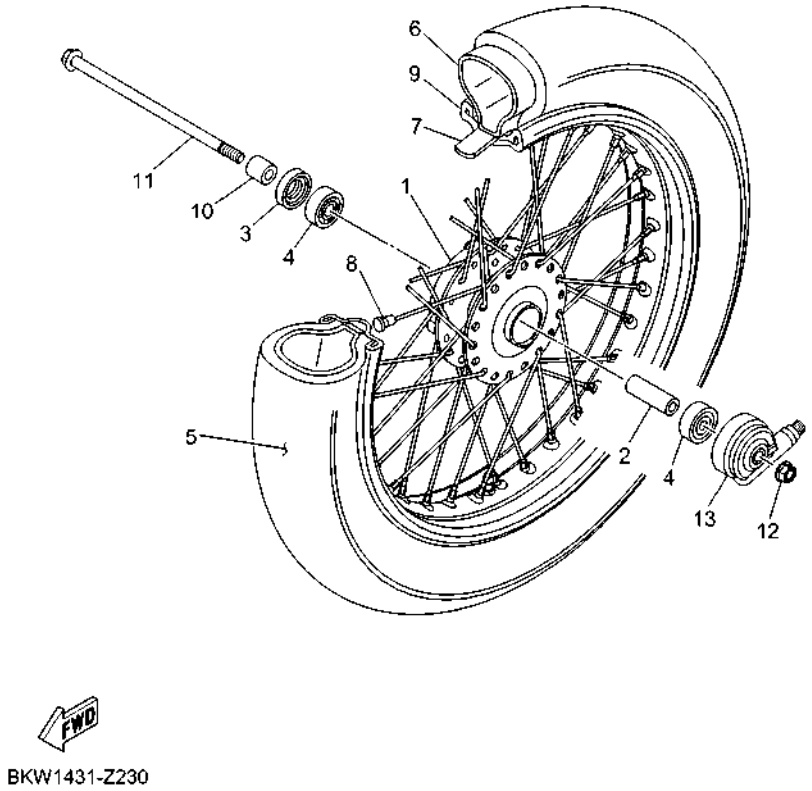

FIG. 23 FRONT WHEEL

REF. NO.	PART NO.	DESCRIPTION	BNT2					REMARKS
1	1FC–F5111–00–WN	HUB, FRONT	1					CIS FOR MNBM9,SMX
2	90560–10292	SPACER	1					
3	93106–20808	OIL SEAL	1					
4	93306–300X9	BEARING	2					
5	94109–16800	TIRE (90/100-16M/C 51P)	1					INOUE
6	94209–16800	TUBE (2.75/3.00-16 TR4)	1					INOUE
7	94309–16800	BAND, RIM	1					
8	BKW–F5104–00	SPOKE SET, FRONT	1					
9	94421–16801	RIM (2.15-16)	1					
10	90387–10835	COLLAR	1					
11	BJ7–F5181–00	AXLE, WHEEL	1					
12	95602–10200	NUT, SELF-LOCKING	1					
13	BKW–F5190–00	GEAR UNIT ASSY	1					

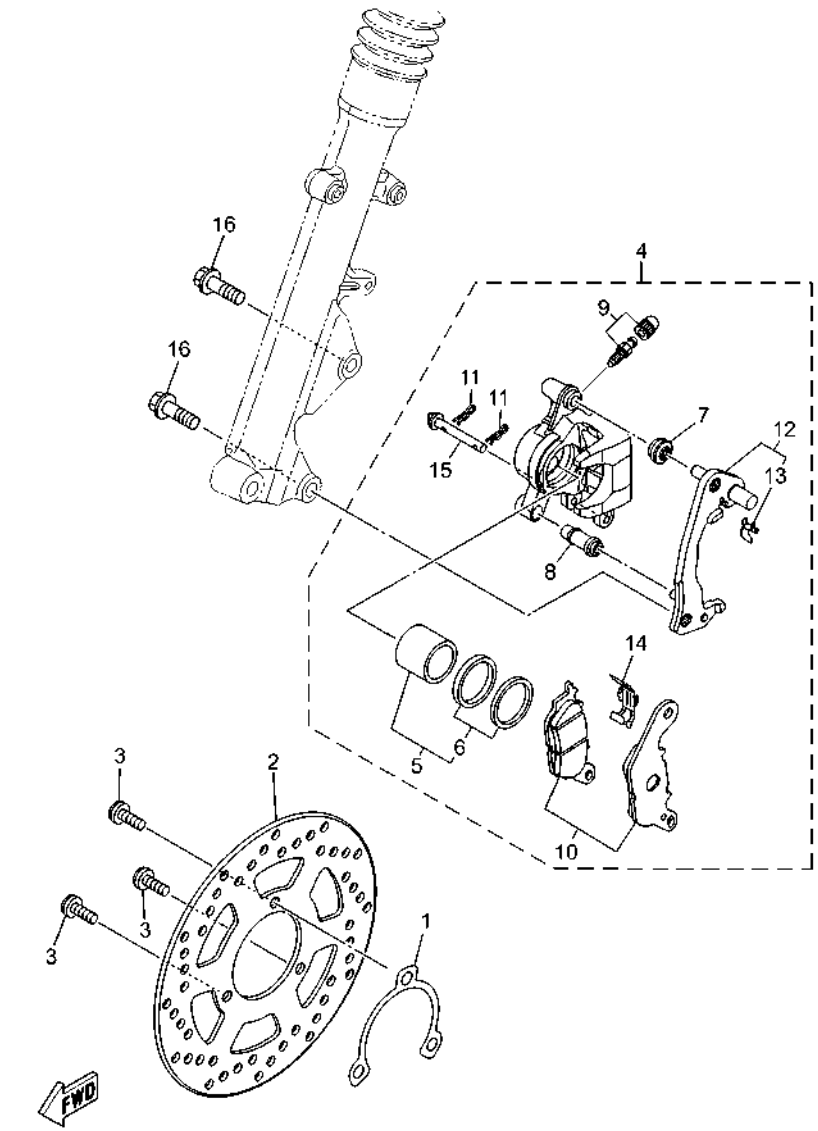

BNT1440-0240

FIG. 24 FRONT BRAKE CALIPER

REF. NO.	PART NO.	DESCRIPTION	BNT2					REMARKS
1	1FC–F518A–00	PLATE, FITTING	1					
2	1FC–F582U–11	DISK, BRAKE (RIGHT)	1					
3	90111–08815	BOLT, HEXAGON SOCKET BUTTON	3					
4	2PH–F580U–01	CALIPER ASSY (RIGHT)	1					
5	2BM–F5802–00	.PISTON ASSY, CALIPER	1					
6	5YP–F5803–50	..CALIPER SEAL KIT	1					
7	2BM–F5917–00	.BOOT, CALIPER	1					
8	5YP–F5937–00	.BOOT 2	1					
9	4C9–W0048–00	.BLEED SCREW KIT	1					
10	2BM–F5805–00	.BRAKE PAD KIT	1					
11	5YP–F5925–01	.CLIP	2					
12	2BM–F5920–00	.SUPPORT BRACKET ASSY	1					
13	2BM–F5939–00	..CLIP, PAD	1					
14	2BM–F5919–00	.SUPPORT, PAD	1					
15	5YP–F5924–00	.PIN, PAD	1					
16	90105–10831	BOLT, FLANGE	2					

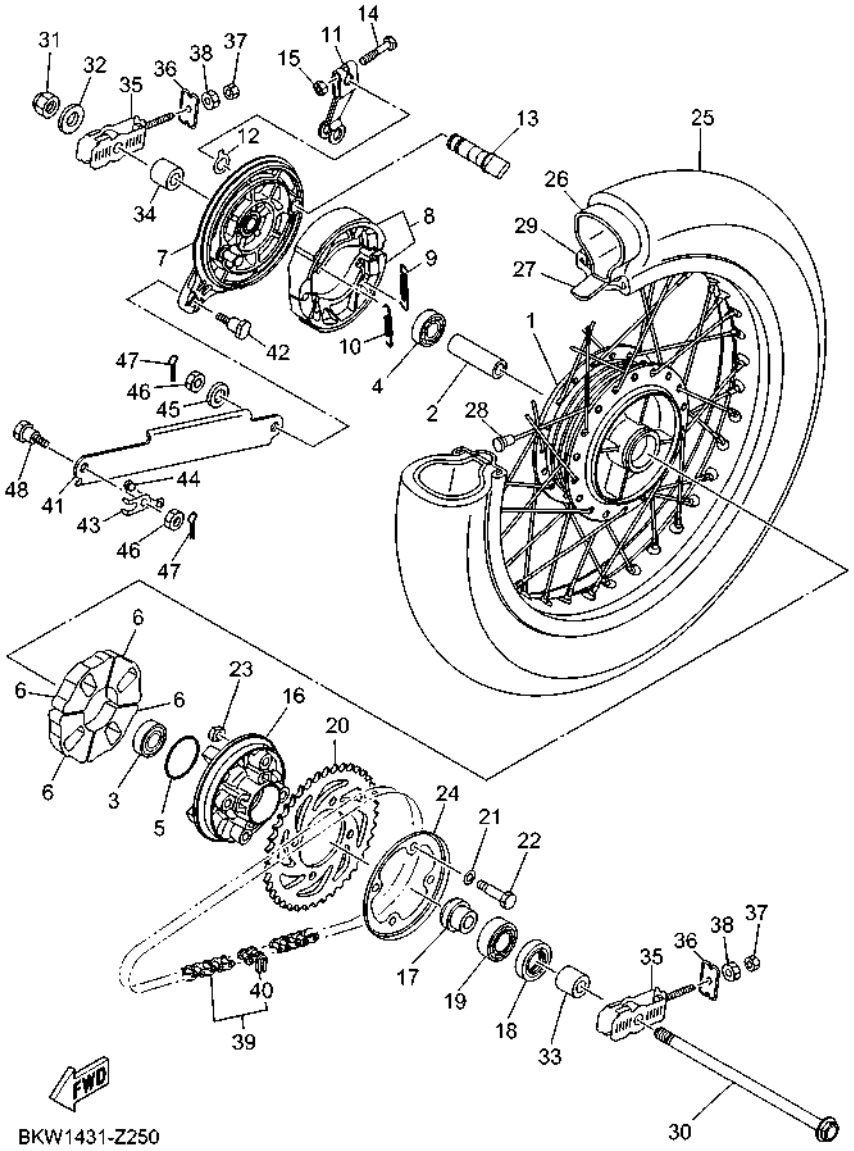

FIG. 25 REAR WHEEL

REF. NO.	PART NO.	DESCRIPTION	BNT2					REMARKS
1	1S9–F5311–00–WN	HUB, REAR	1					CIS FOR MNBM9,SMX
2	90387–12860	COLLAR	1					
3	93306–301YR	BEARING	1					
4	93306–301YP	BEARING	1					
5	93210–41041	O-RING	1					
6	1FC–F5364–00	DAMPER	4					
7	1S9–F5321–00–WN	PLATE, BRAKE SHOE	1					CIS FOR MNBM9,SMX
8	1S9–F530K–00	BRAKE SHOE SET	1					
9	90506–12001	SPRING, TENSION	1					
10	90506–15001	SPRING, TENSION	1					
11	BKW–F5355–00	LEVER, CAMSHAFT	1					
12	16S–F533A–00	PLATE, INDICATOR	1					
13	1S9–F5351–00	CAMSHAFT	1					
14	90101–06046	BOLT	1					
15	95302–06600	NUT, HEXAGON	1					
16	16S–F5366–00	CLUTCH, HUB	1					
17	90387–12868	COLLAR	1					
18	93106–26823	OIL SEAL	1					
19	93306–054YK	BEARING	1					
20	1FC–F5440–00	SPROCKET, DRIVEN (40T)	1					
21	90201–08057	WASHER, PLATE	4					
22	90101–08848	BOLT	4					
23	90179–08826	NUT	4					
24	1FC–F5414–00	SPACER	1					
25	94109–16800	TIRE (90/100-16M/C 51P)	1					INOUE
26	94209–16800	TUBE (2.75/3.00-16 TR4)	1					INOUE
27	94309–16800	BAND, RIM	1					

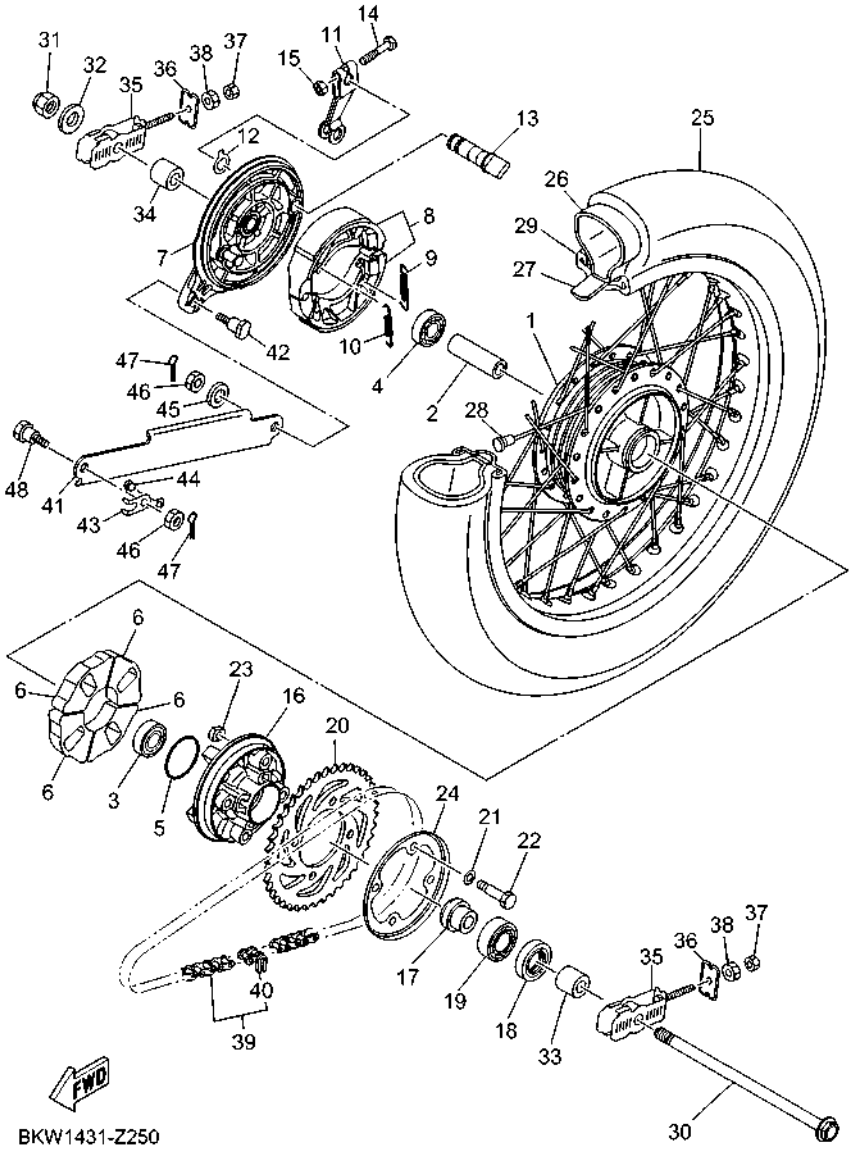

FIG. 25 REAR WHEEL

REF. NO.	PART NO.	DESCRIPTION	BNT2					REMARKS
28	BKW–F5304–00	SPOKE SET, REAR	1					
29	94421–16802	RIM (2.15-16)	1					
30	1S9–F5381–10	AXLE, WHEEL	1					
31	90185–12804	NUT, SELF-LOCKING	1					
32	90201–12833	WASHER, PLATE	1					
33	16S–F5383–00	COLLAR, WHEEL	1					
34	1FC–F5377–00	COLLAR, WHEEL	1					
35	5TF–F5389–00	PULLER, CHAIN 2	2					
36	5TF–F539F–00	PLATE 1	2					
37	95302–06600	NUT, HEXAGON	2					
38	90170–06809	NUT	2					
39	94A40–23110	SET, CHAIN (RK 420EL1 110L)	1					
40	94668–L9001	.JOINT, CHAIN (RK 420EL1)	1					
41	BKW–F5371–00	BAR, TENSION	1					
42	90109–08816	BOLT	1					
43	BKW–F5365–00	PLATE, DAMPER FITTING	1					
44	B5V–F1717–00	DAMPER	1					UR
	BAX–F1717–00	DAMPER	1					UR
45	92902–08200	WASHER	1					
46	95302–08600	NUT, HEXAGON	2					
47	91402–20012	PIN, COTTER	2					
48	90109–08223	BOLT	1					

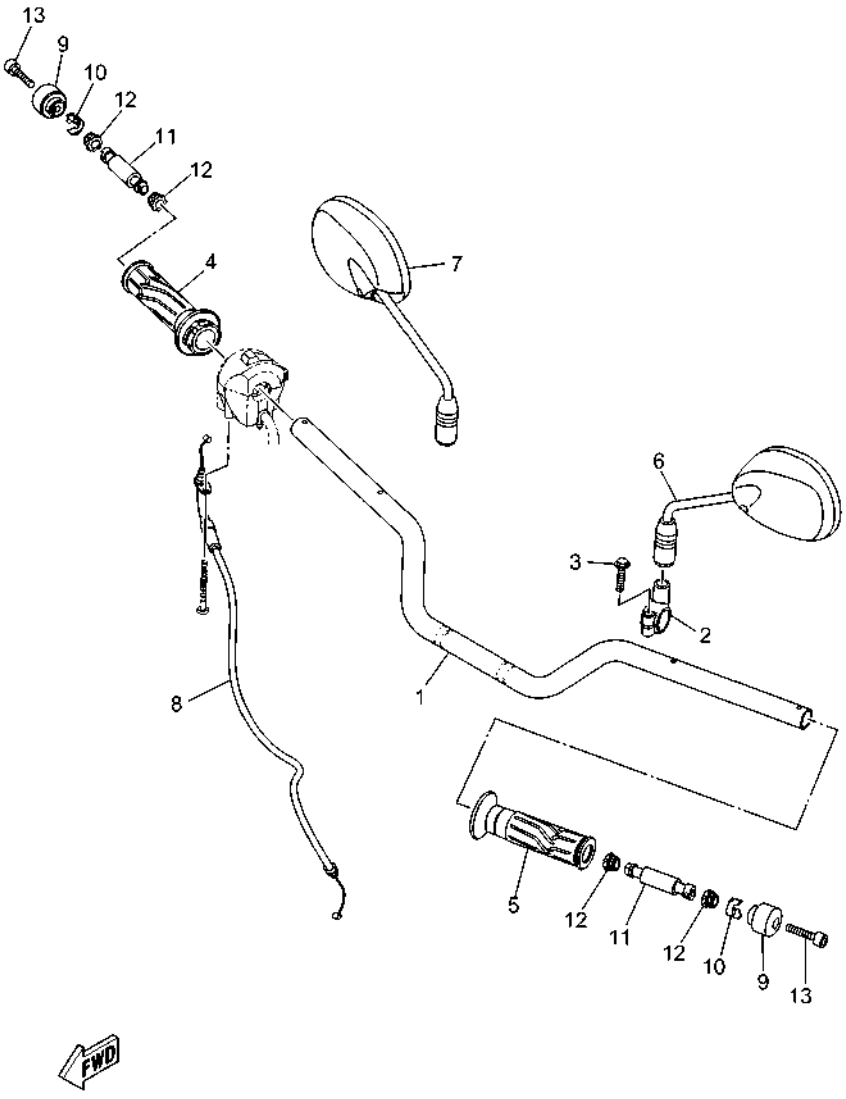

BKW1431-Z260

FIG. 26 STEERING HANDLE & CABLE

REF. NO.	PART NO.	DESCRIPTION	BNT2					REMARKS
1	BKW–F6111–00	HANDLEBAR	1					
2	BKW–F629N–10	BRACKET, MIRROR 1	1					
3	95027–06025	BOLT, FLANGE	1					
4	BKW–F6240–00	GRIP ASSY	1					
5	BKW–F6241–00	GRIP	1					
6	BKW–F6280–00	REAR VIEW MIRROR ASSY (LEFT)	1					
7	BKW–F6290–00	REAR VIEW MIRROR ASSY (RIGHT)	1					
8	BKW–F6301–00	THROTTLE CABLE ASSY	1					
9	BKW–F6246–00	END, GRIP	2					
10	B5V–F6257–00	STOPPER	2					
11	BKW–F622H–00	WEIGHT	2					
12	1S8–F622F–00	DAMPER, LOCATING 1	4					
13	91317–06030	BOLT, HEXAGON SOCKET HEAD	2					

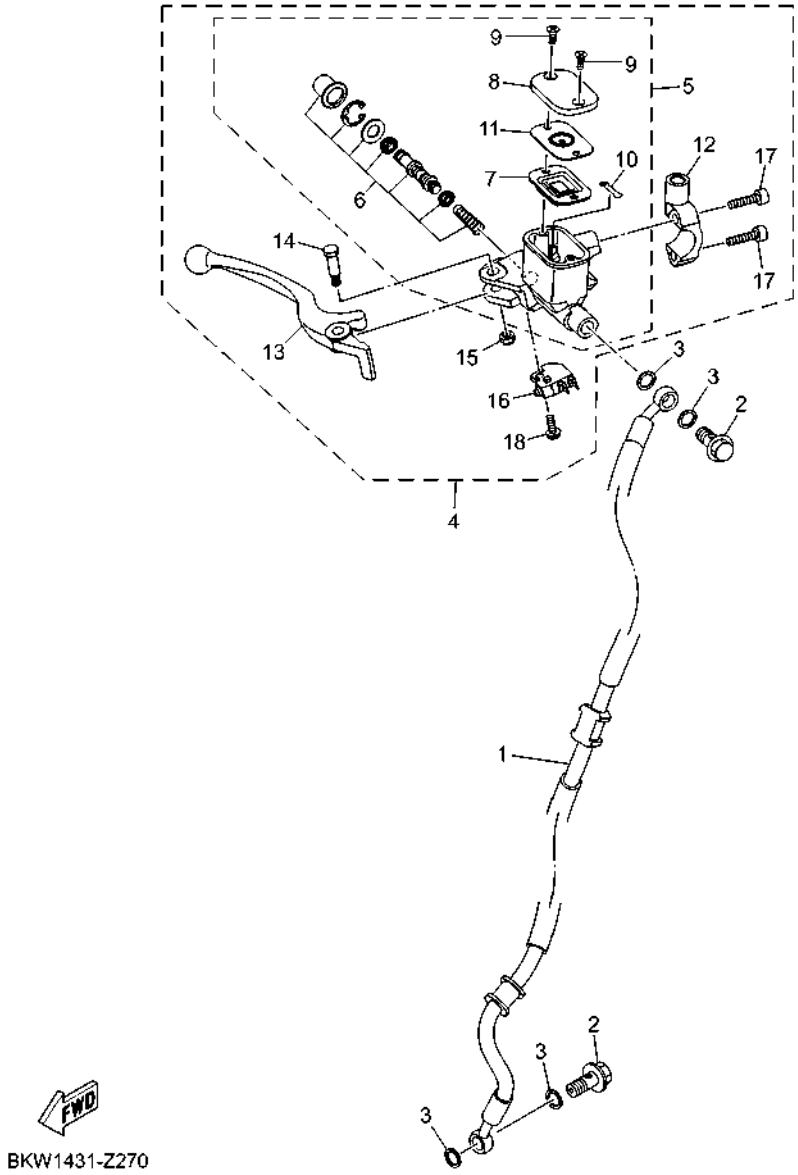

FIG. 27 FRONT MASTER CYLINDER

REF. NO.	PART NO.	DESCRIPTION	BNT2					REMARKS
1	BKW–F5872–00	HOSE, BRAKE 1	1					
2	90401–10812	BOLT, UNION	2					
3	90201–10118	WASHER, PLATE	4					
4	2ND–F583T–03	MASTER CYLINDER ASSY	1					
5	2ND–F5870–00	.MASTER CYLINDER SUB ASSY	1					
6	5P0–F580A–00	..CYLINDER KIT, MASTER	1					
7	2ND–F5854–00	..DIAPHRAGM, RESERVOIR	1					
8	2ND–F5852–00	..CAP, RESERVOIR	1					
9	36Y–2589H–00	..SCREW	2					
10	3RW–25889–00	..SEPARATOR	1					
11	2ND–F5855–00	..BUSH,DIAPHRAGM	1					
12	5TL–F5867–11	.BRACKET,MASTER CYLINDER(BLACK)	1					
13	2ND–H3922–00	.LEVER 2	1					
14	90109–06577	.BOLT	1					
15	95602–06100	.NUT, SELF-LOCKING	1					
16	2DP–H3980–01	.FRONT STOP SWITCH ASSY	1					
17	91317–06025	.BOLT, HEXAGON SOCKET HEAD	2					
18	97602–04312	.SCREW, PAN HEAD WITH WASHER	1					

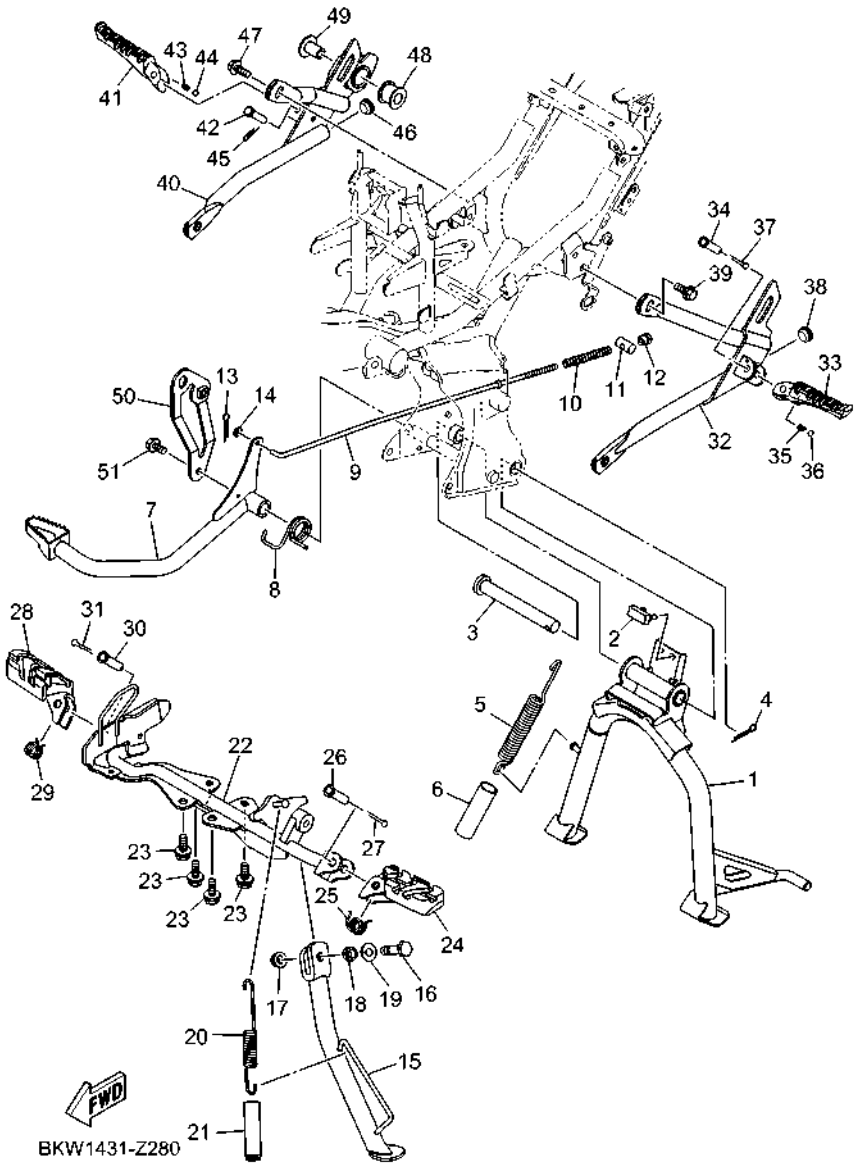

FIG. 28 STAND & FOOTREST

REF. NO.	PART NO.	DESCRIPTION	BNT2					REMARKS
1	BKW–F7111–00	STAND, MAIN	1					
2	1FC–F7114–11	STOPPER, MAIN STAND	1					
3	1FC–F7112–00	SHAFT, MAIN STAND	1					
4	91401–30030	PIN, COTTER	1					
5	90506–35806	SPRING, TENSION	1					
6	90445–22800	HOSE	1					
7	BKW–F7211–00	PEDAL, BRAKE	1					
8	BKW–F7426–00	SPRING, RETURN	1					
9	BKW–F7231–00	ROD, BRAKE	1					
10	90501–10245	SPRING, COMPRESSION	1					
11	90249–12008	PIN	1					
12	90179–06835	NUT	1					
13	91402–20012	PIN, COTTER	1					
14	92902–06600	WASHER, PLATE	1					
15	BKW–F7311–00	STAND, SIDE	1					
16	90101–10812	BOLT	1					
17	95602–10200	NUT, SELF-LOCKING	1					
18	90387–10003	COLLAR	1					
19	90201–10035	WASHER, PLATE	1					
20	90506–26814	SPRING, TENSION	1					
21	90445–18806	HOSE	1					
22	BKW–F7411–00	FOOTREST 1	1					
23	95D32–08016	BOLT, FLANGE DEEP RECESS	4					
24	BKW–F7451–00	FOOTREST 3	1					
25	BKW–F7116–00	SPRING, MAIN STAND	1					
26	90240–10800	PIN, CLEVIS	1					
27	91402–25015	PIN, COTTER	1					

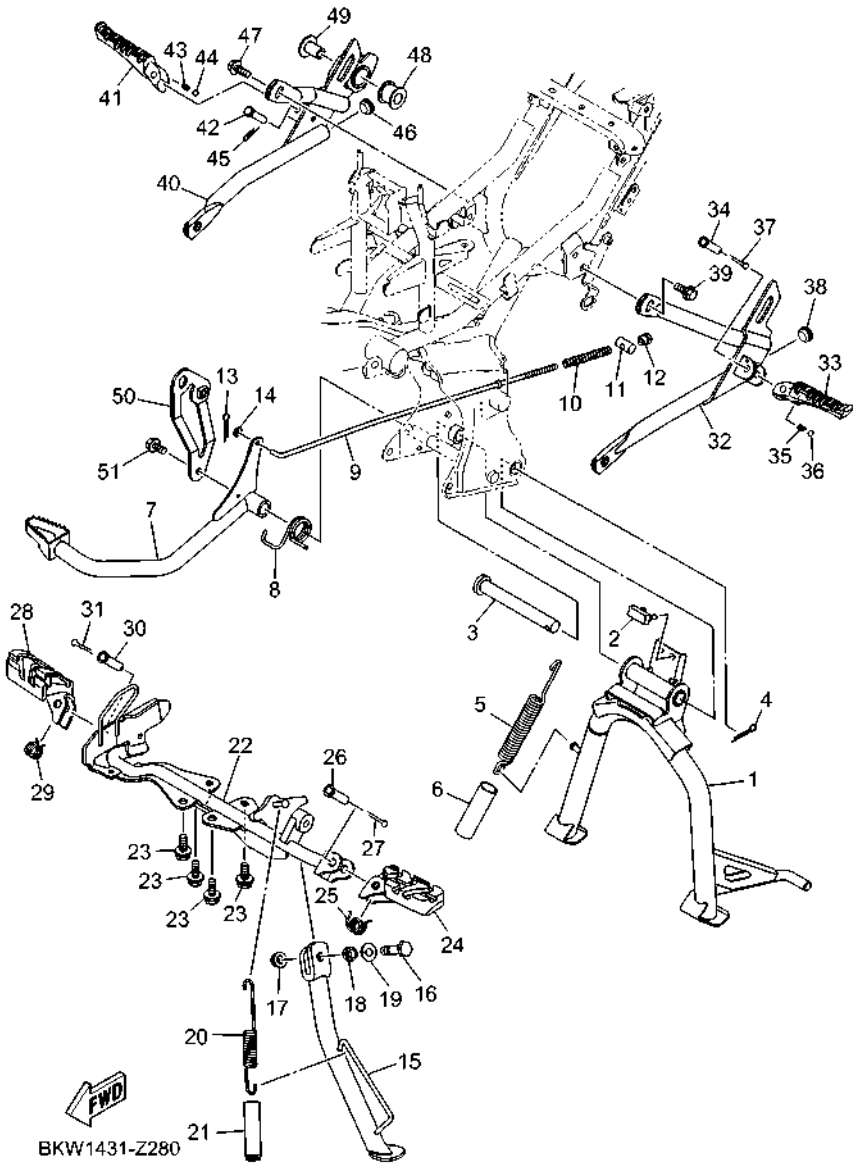

FIG. 28 STAND & FOOTREST

REF. NO.	PART NO.	DESCRIPTION	BNT2					REMARKS
28	BKW–F7461–00	FOOTREST 4	1					
29	BKW–F7316–00	SPRING, SIDE STAND	1					
30	90240–10800	PIN, CLEVIS	1					
31	91402–25015	PIN, COTTER	1					
32	BKW–F7432–00	BRACKET 1	1					
33	BSM–F7431–00	FOOTREST, REAR 1	1					
34	91702–08035	PIN, CLEVIS	1					
35	90501–12743	SPRING, COMPRESSION	1					
36	93501–04823	BALL	1					
37	91401–25015	PIN, COTTER	1					
38	90338–15821	PLUG	1					
39	95D37–08020	BOLT, FLANGE DEEP RECESS	1					
40	BKW–F7442–00	BRACKET 2	1					
41	BSM–F7441–00	FOOTREST, REAR 2	1					
42	91702–08035	PIN, CLEVIS	1					
43	90501–12743	SPRING, COMPRESSION	1					
44	93501–04823	BALL	1					
45	91401–25015	PIN, COTTER	1					
46	90338–15821	PLUG	1					
47	95D37–08020	BOLT, FLANGE DEEP RECESS	1					
48	29B–E4747–00	DAMPER, MUFFLER	1					
49	90387–08812	COLLAR	1					
50	BKW–F194J–00	STAY, MUFFLER	1					
51	95D32–08016	BOLT, FLANGE DEEP RECESS	1					

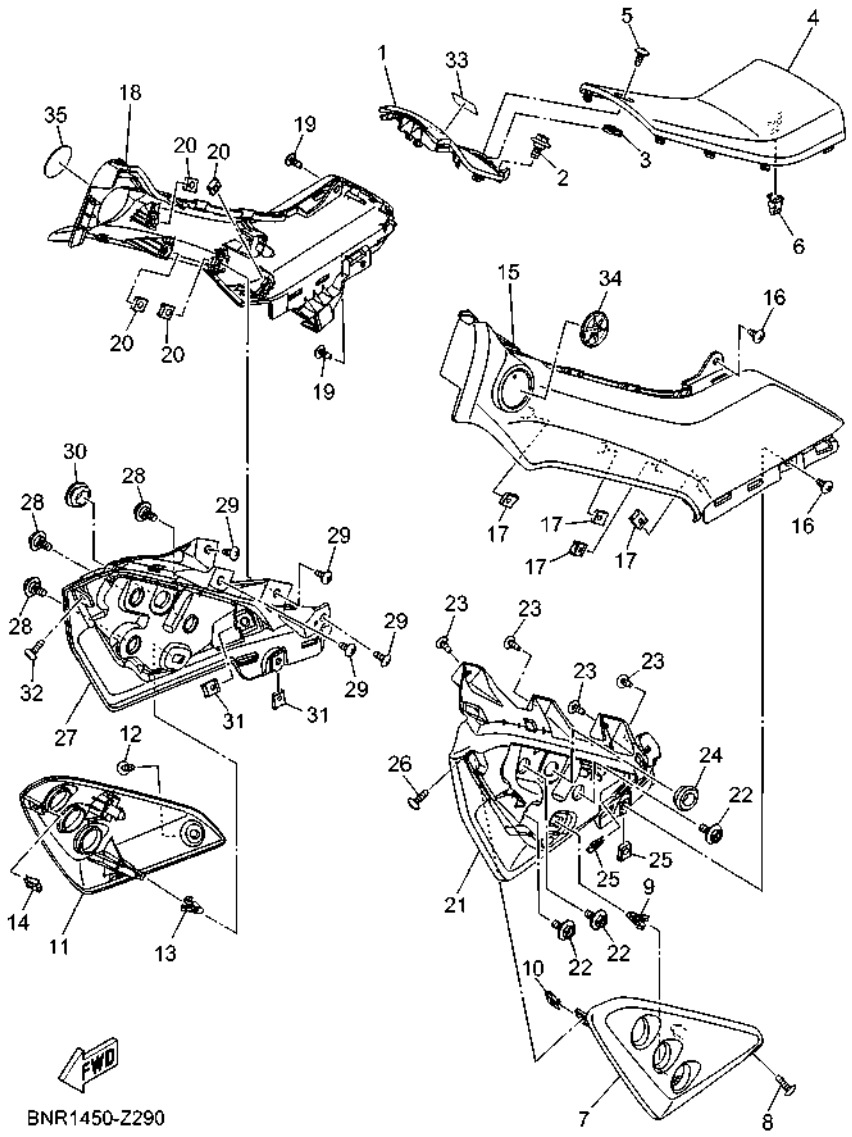

FIG. 29 LEG SHIELD

REF. NO.	PART NO.	DESCRIPTION	BNT2					REMARKS
1	BKW–F8365–00–P6	COVER	1					UR FOR MNBM9
	BKW–F8365–00–P8	COVER	1					UR FOR SMX
2	90109–068B5	BOLT	1					
3	90183–05807	NUT, SPRING	1					
4	BKW–F8378–00	PAD	1					
5	90160–05808	SCREW, ROUND TAPPING	1					
6	90464–07018	CLAMP	1					
7	BKW–F835U–00–P0	PANEL 1	1					MS1
8	90160–05814	SCREW, ROUND TAPPING	1					
9	90464–07018	CLAMP	1					
10	90183–05807	NUT, SPRING	1					
11	BKW–F835V–00–P0	PANEL 2	1					MS1
12	90160–05814	SCREW, ROUND TAPPING	1					
13	90464–07018	CLAMP	1					
14	90183–05807	NUT, SPRING	1					
15	BKW–F837L–00–P6	PANEL, CONSOLE 1	1					UR FOR MNBM9
	BKW–F837L–00–P8	PANEL, CONSOLE 1	1					UR FOR SMX
16	97707–50012	SCREW, TRUSS HEAD TAPPING	2					
17	90183–05807	NUT, SPRING	4					
18	BKW–F837M–00–P6	PANEL, CONSOLE 2	1					UR FOR MNBM9
	BKW–F837M–00–P8	PANEL, CONSOLE 2	1					UR FOR SMX
19	97707–50012	SCREW, TRUSS HEAD TAPPING	2					
20	90183–05807	NUT, SPRING	4					
21	BKW–F836K–00	PANEL, INNER 1	1					
22	90109–068B5	BOLT	3					
23	97702–50012	SCREW,TAPPING	4					
24	90480–01559	GROMMET	1					

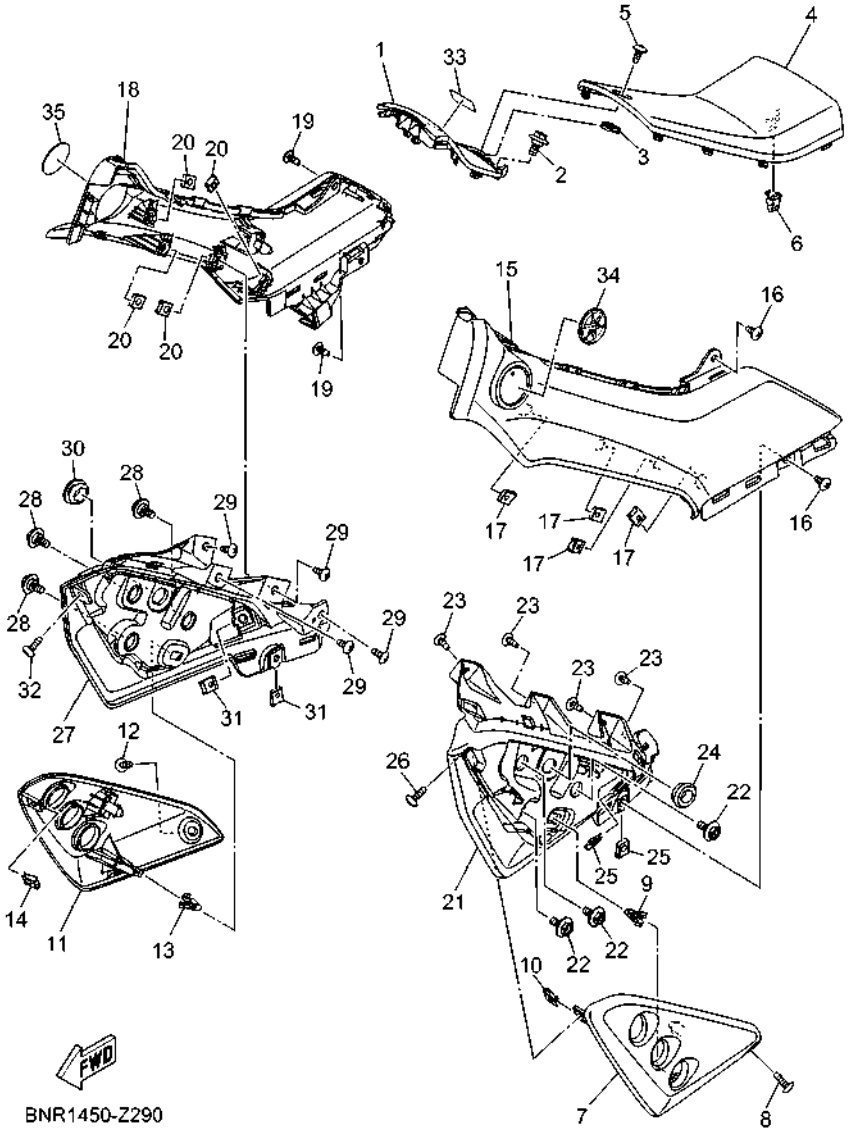

FIG. 29 LEG SHIELD

REF. NO.	PART NO.	DESCRIPTION	BNT2					REMARKS
25	90183–05807	NUT, SPRING	2					
26	90160–05814	SCREW, ROUND TAPPING	1					
27	BKW–F836L–00	PANEL, INNER 2	1					
28	90109–068B5	BOLT	3					
29	97702–50012	SCREW,TAPPING	4					
30	90480–01559	GROMMET	1					
31	90183–05807	NUT, SPRING	2					
32	90160–05814	SCREW, ROUND TAPPING	1					
33	B17–F1568–00	LABEL, WARNING	1					
34	BKW–F175C–00	TUNING FORK MARK	1					
35	BKW–F175C–00	TUNING FORK MARK	1					

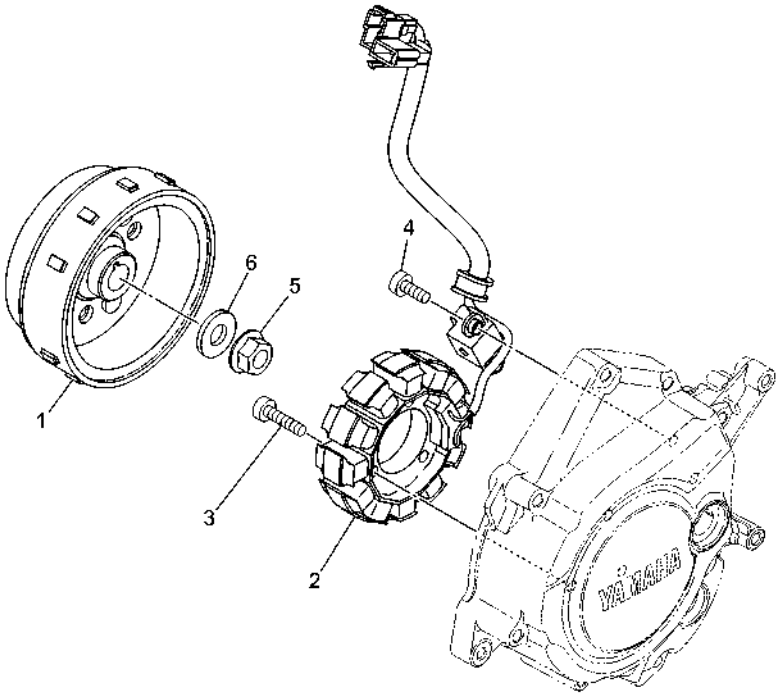

BKW1431-Z300

FIG. 30 GENERATOR

REF. NO.	PART NO.	DESCRIPTION	BNT2					REMARKS
1	B6F–H1450–11	ROTOR ASSY	1					
2	B6F–H1410–02	STATOR ASSY	1					
3	91332–06025	BOLT	3					
4	91332–06016	BOLT	2					
5	95702–12500	NUT, FLANGE	1					
6	90201–122H1	WASHER, PLATE	1					

FIG. 31 STARTING MOTOR

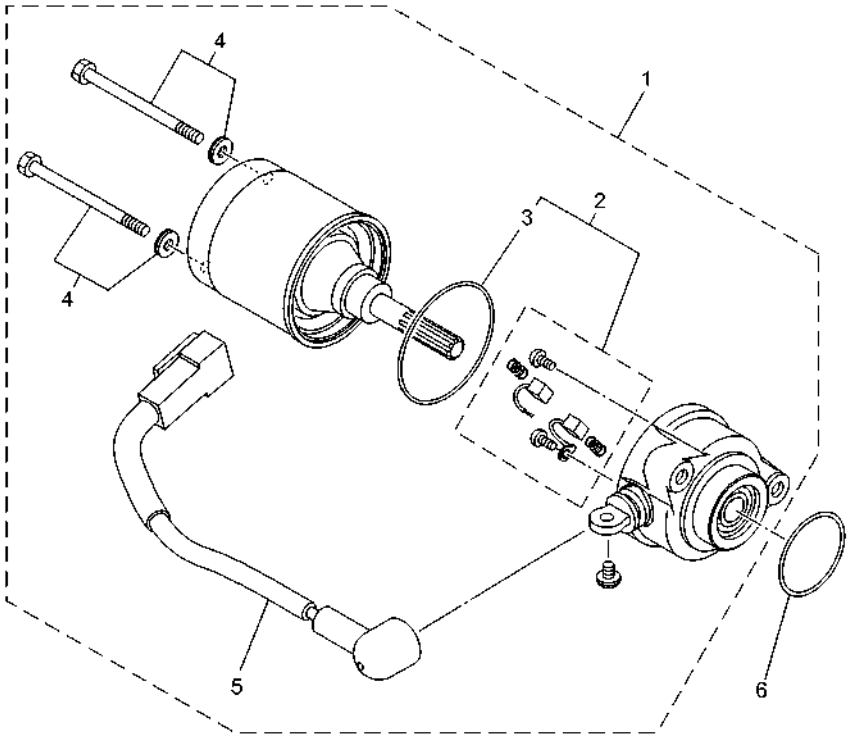

BKW1431-Z310

REF. NO.	PART NO.	DESCRIPTION	BNT2					REMARKS
1	BBK–H1800–12	STARTING MOTOR ASSY	1					
2	1PB–WH18E–00	.BRUSH REPAIR KIT.	1					
3	BBK–H1861–00	..GASKET	1					
4	5D9–H1828–00	.SCREW SET	1					
5	1FC–H183G–00	.CORD COMP.	1					
6	93210–29805	O-RING	1					UR
	93210–29803	O-RING	1					UR

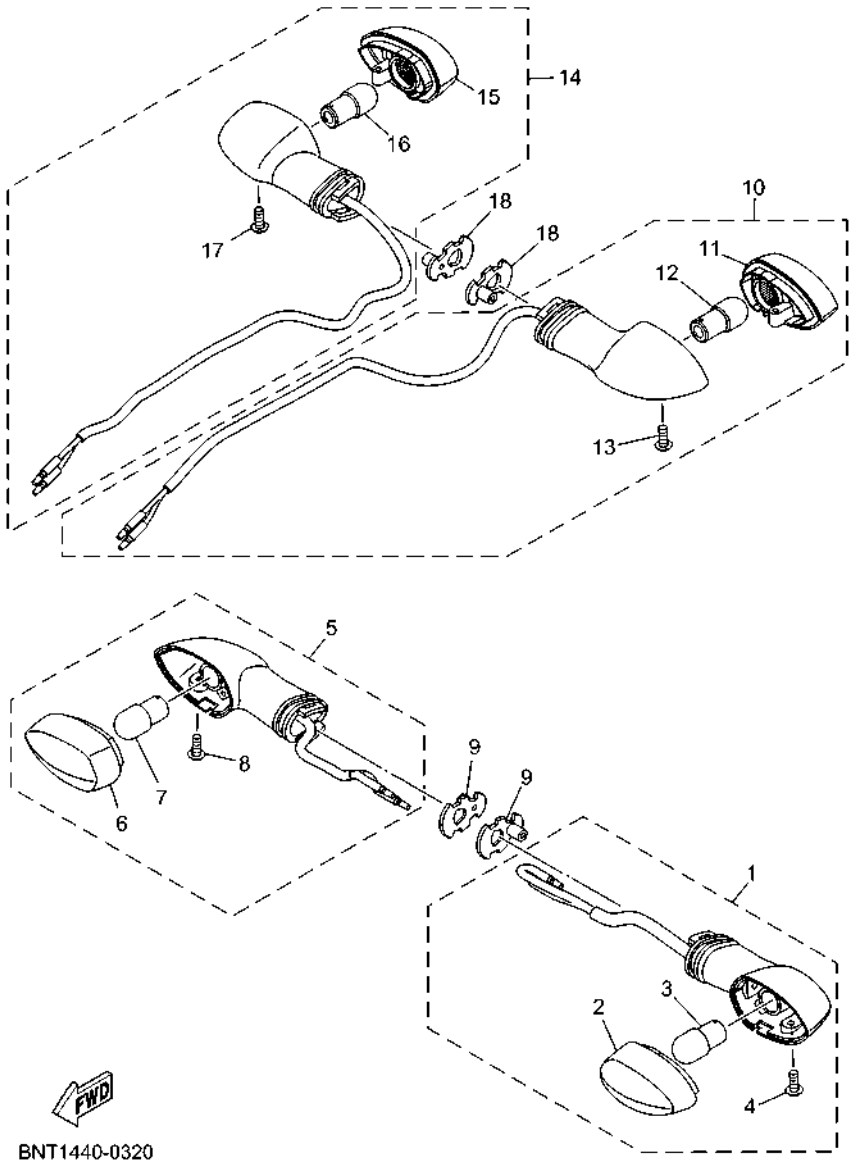

FIG. 32 FLASHER LIGHT

REF. NO.	PART NO.	DESCRIPTION	BNT2					REMARKS
1	BNT–H3310–00	FRONT FLASHER LIGHT ASSY 1	1					
2	1VP–H334A–00	.LENS COMP 2	1					
3	1VP–H3311–00	.BULB (12V-10W)	1					
4	1VP–H3333–00	.SCREW, LENS FITTING	1					
5	BNT–H3320–00	FRONT FLASHER LIGHT ASSY 2	1					
6	1VP–H333A–00	.LENS COMP 1	1					
7	1VP–H3311–00	.BULB (12V-10W)	1					
8	1VP–H3333–00	.SCREW, LENS FITTING	1					
9	1VP–H3318–00	STAY, FLASHER 1	2					
10	BNT–H3330–00	REAR FLASHER LIGHT ASSY 1	1					
11	1VP–H333A–00	.LENS COMP 1	1					
12	1VP–H3311–00	.BULB (12V-10W)	1					
13	1VP–H3333–00	.SCREW, LENS FITTING	1					
14	BNT–H3340–00	REAR FLASHER LIGHT ASSY 2	1					
15	1VP–H334A–00	.LENS COMP 2	1					
16	1VP–H3311–00	.BULB (12V-10W)	1					
17	1VP–H3333–00	.SCREW, LENS FITTING	1					
18	1VP–H3318–00	STAY, FLASHER 1	2					

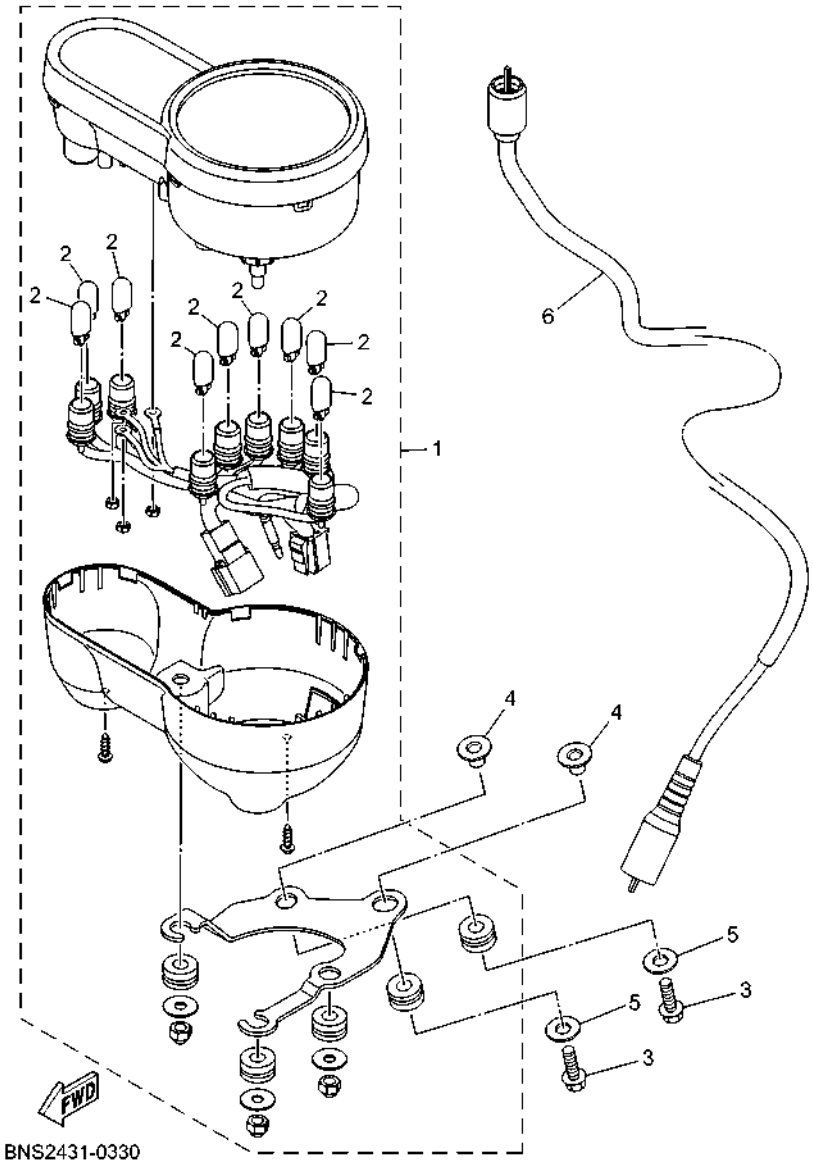

FIG. 33 METER

REF. NO.	PART NO.	DESCRIPTION	BNT2					REMARKS
1	BKW–H3510–00	SPEEDOMETER ASSY	1					
2	BKW–H3517–00	.BULB	9					
3	95E32–06020	BOLT, FLANGE DEEP RECESS	2					
4	90387–068P5	COLLAR	2					
5	90201–06856	WASHER, PLATE	2					
6	BKW–H3550–00	SPEEDOMETER CABLE ASSY	1					

FIG. 34 HEADLIGHT

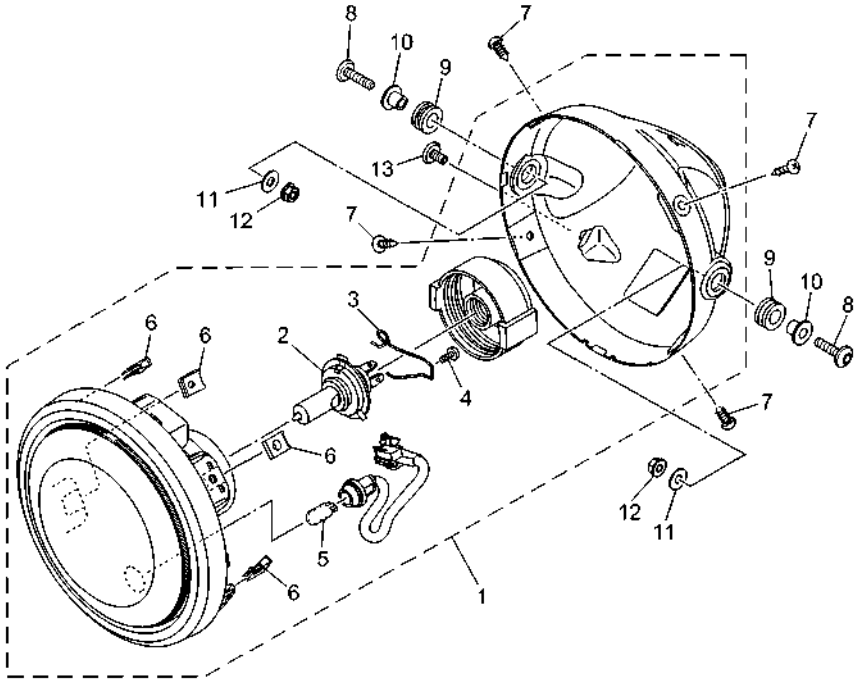

BKW1431-Z340

REF. NO.	PART NO.	DESCRIPTION	BNT2					REMARKS
1	BKW–H4310–00	HEADLIGHT UNIT ASSY	1					
2	2ND–H4314–00	.BULB, HEADLIGHT (12V-35/35W)	1					
3	1FC–H4393–10	.SPRING SUPPORT	1					
4	5B9–H4192–00	.SCREW, SPECIAL	1					
5	31B–H5353–00	.BULB (12V-5W)	1					
6	90183–05807	.NUT, SPRING	4					
7	97707–50016	SCREW, TRUSS HEAD TAPPING	4					
8	90111–06885	BOLT, HEXAGON SOCKET BUTTON	2					
9	90480–14825	GROMMET	2					
10	90387–068G3	COLLAR	2					
11	90201–06079	WASHER, PLATE	2					
12	95702–06500	NUT, FLANGE	2					
13	90111–06119	BOLT, HEXAGON SOCKET BUTTON	1					

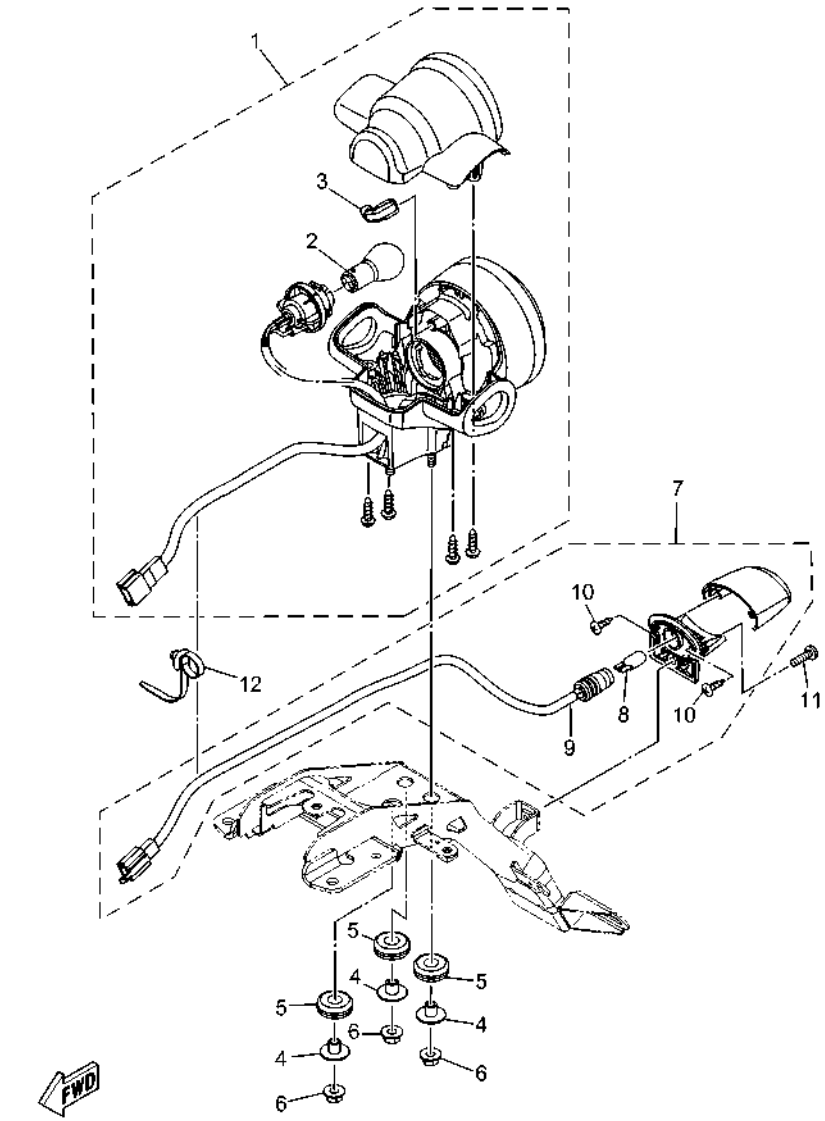

BKW1431-Z350

FIG. 35 TAILLIGHT

REF. NO.	PART NO.	DESCRIPTION	BNT2					REMARKS
1	BKW–H4710–00	TAILLIGHT UNIT ASSY	1					
2	4AC–H4714–00	.BULB (12V-21/5W)	1					
3	2BM–H411V–00	.CAP	1					
4	90387–05831	COLLAR	3					
5	90480–12826	GROMMET	3					
6	95702–05500	NUT, FLANGE	3					
7	BNT–H4740–00	LICENSE LIGHT ASSY	1					
8	B17–H4744–00	.BULB (12V-5W)	1					
9	BNT–H4547–00	.CORD, LICENSE LIGHT	1					
10	B17–H4726–00	.SCREW	2					
11	98907–04014	SCREW, BIND	1					
12	90464–36007	CLAMP	1					

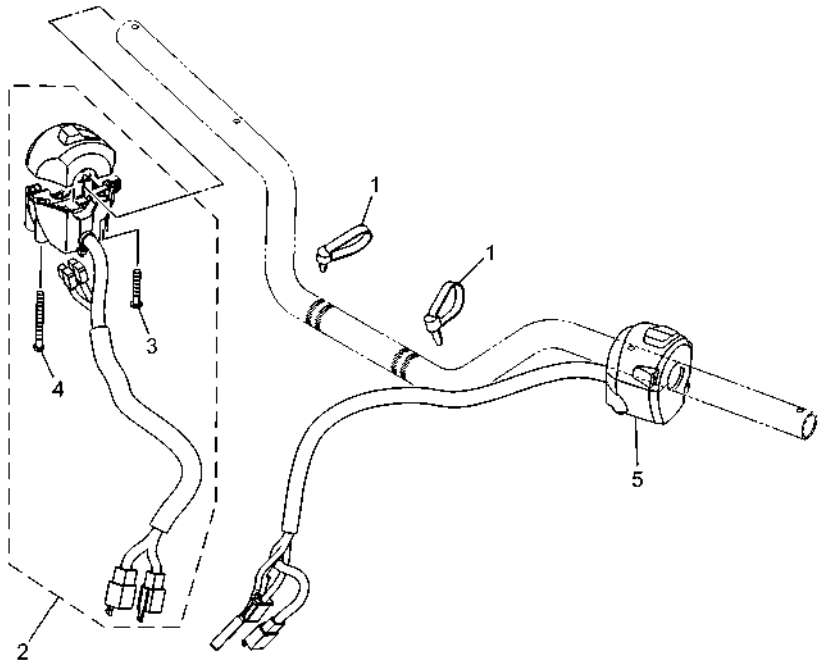

BKW1431-Z360

FIG. 36 HANDLE SWITCH & LEVER

REF. NO.	PART NO.	DESCRIPTION	BNT2					REMARKS
1	90464–25004	CLAMP	2					(101.0x7.0)
2	BKW–H3963–00	SWITCH, HANDLE 3	1					
3	45P–H2133–00	.SCREW, FITTING	1					
4	45P–H395W–00	.SCREW, SWITCH FITTING	1					
5	BKW–H3972–00	SWITCH, HANDLE 4	1					

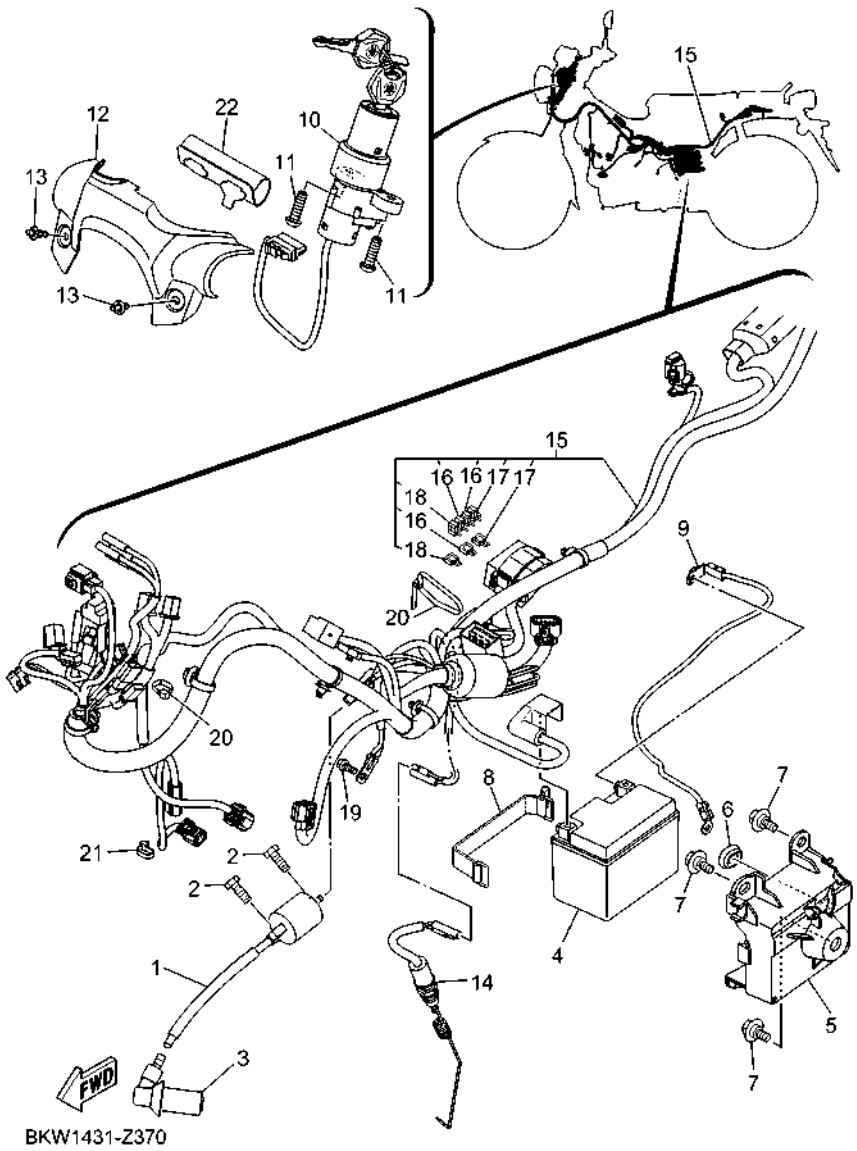

FIG. 37 ELECTRICAL 1

REF. NO.	PART NO.	DESCRIPTION	BNT2					REMARKS
1	B5V–H2310–01	IGNITION COIL ASSY	1					
2	95E32–06016	BOLT, FLANGE DEEP RECESS	2					
3	2PH–H2370–10	PLUG CAP ASSY	1					
4	2CB–H2100–01	BATTERY ASSY (YUASA YTZ4V)	1					UR
	55D–H2100–00	BATTERY ASSY (PINACO PTZ5S)	1					UR
5	BKW–H212B–00	BOX, BATTERY 1	1					
6	90480–01559	GROMMET	1					
7	90109–068B5	BOLT	3					
8	BKW–H2131–00	BAND, BATTERY	1					
9	BKW–H2116–00	WIRE, MINUS LEAD	1					
10	BKW–H2501–00	MAIN SWITCH STEERING LOCK	1					
11	90111–06162	BOLT, HEXAGON SOCKET BUTTON	2					
12	BKW–H2568–00	COVER, MAIN SWITCH	1					
13	90269–06816	RIVET	2					
14	1FC–H2530–01	STOP SWITCH ASSY	1					
15	BKW–H2590–00	WIRE HARNESS ASSY	1					
16	2BM–H2151–01	.FUSE (7.5A)	3					
17	B8A–H2151–11	.FUSE (15A)	2					
18	B5V–H2151–90	.FUSE (5A)	2					
19	95E32–06014	BOLT, FLANGE DEEP RECESS	1					
20	90464–36800	CLAMP	2					
21	90464–70800	CLAMP	1					
22	BKW–H1662–00	COVER, CONNECTER	1					

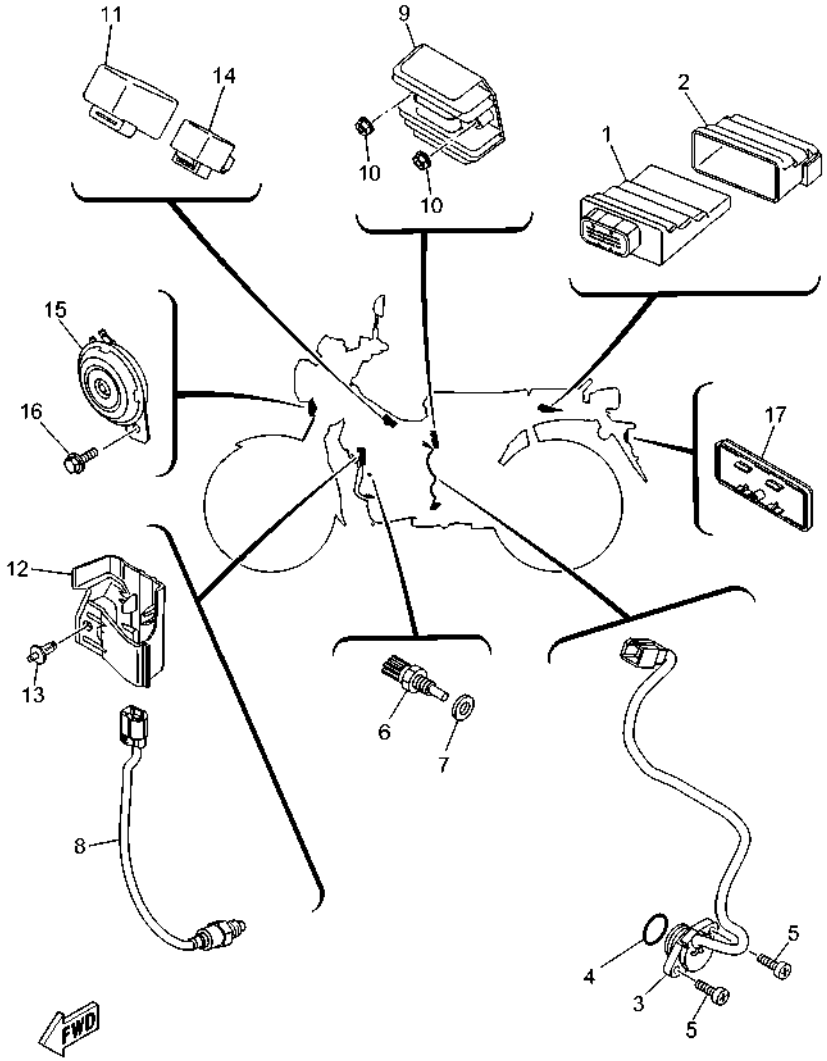

BKW1431-Z380

FIG. 38 ELECTRICAL 2

REF. NO.	PART NO.	DESCRIPTION	BNT2					REMARKS
1	BNT–H591A–00	ENGINE CONTROL UNIT ASSY	1					
2	BKW–H5546–00	BAND	1					
3	16S–H2540–00	NEUTRAL SWITCH ASSY	1					
4	93210–21802	O-RING	1					
5	98502–05016	SCREW,PAN HEAD	2					
6	B7J–H3591–00	THERMO UNIT	1					
7	90430–10806	GASKET	1					
8	2BM–H592A–20	SENSOR, OXYGEN	1					
9	2BL–H1960–10	RECTIFIER & REGULATOR ASSY	1					
10	95702–06500	NUT, FLANGE	2					
11	5TP–H1940–01	STARTER RELAY ASSY	1					
12	BKW–H246B–00	COVER 1	1					
13	90269–06816	RIVET	1					
14	B3F–H3350–10	FLASHER RELAY ASSY	1					
15	1ST–H3371–00	HORN	1					
16	95D32–06012	BOLT, FLANGE DEEP RECESS	1					
17	BE1–H5130–00	REAR REFLECTOR ASSY	1					UR
	55D–H5130–00	REAR REFLECTOR ASSY	1					UR

PART NO.	REF. NO.
1AA–12118–00	3 – 5
3RW–25889–00	27 – 10
36Y–2589H–00	27 – 9
1FC–E1102–10	1 – 1
1DB–E111F–00	4 – 5
1DR–E1133–10	1 – 2
1FC–E1166–10	8 – 3
1FC–E1173–00	1 – 9
1FC–E1181–00	1 – 13
1FC–E1191–00	1 – 7
1FD–E1193–00	1 – 10
2VP–E1310–00	1 – 16
1FC–E1351–00	1 – 17
1DY–E1603–10	2 – 10
1PB–E1631–00	2 – 7
1FC–E1633–00	2 – 8
1FC–E1651–00	2 – 4
1DY–E1681–00	2 – 2
2BM–E2111–01	3 – 1
B7E–E2113–00	3 – 4
B63–E2117–01	3 – 6
5TL–E2118–00	3 – 5
1DB–E2119–00	3 – 3
BJ7–E2121–00	3 – 2
55P–E2126–00	3 – 7
1FC–E2146–00	3 – 12
2BM–E2151–02	3 – 8
33S–E2159–01	3 – 10
33S–E2159–10	3 – 10
BPC–E2170–00	4 – 1
44S–E2176–00	4 – 7
2ND–E2210–20	4 – 11
2VP–E2213–00	4 – 13
5MX–E2222–00	4 – 12
1DR–E2228–00	4 – 15
1FC–E2231–00	4 – 9
BBK–E2241–00	4 – 10
44D–E2662–00	3 – 11
16S–E3300–10	5 – 1
16S–E3324–00	5 – 7
4LS–E3411–00	5 – 5
38B–E3440–01	5 – 6
BKW–E3447–00	5 – 8
1FC–E3575–00	6 – 13
B7E–E3585–00	6 – 1
BPC–E3750–01	6 – 4
B7E–E3761–00	6 – 7
B7E–E3770–00	6 – 6

PART NO.	REF. NO.
BKW–E3907–00	21 – 5
2SU–E3938–00	6 – 10
BKW–E3971–00	21 – 10
1ST–E4137–00	6 – 11
2SU–E4147–00	6 – 8
B7E–E41A1–00	6 – 9
1FC–E4411–11	6 – 14
BKW–E4412–00	6 – 16
1FC–E4426–00	6 – 25
5HU–E443E–01	6 – 21
16S–E443G–00	6 – 23
1FC–E4450–01	6 – 15
1FC–E4452–00	6 – 19
1FC–E4453–10	6 – 17
1FC–E4462–00	6 – 18
1GC–E4613–00	7 – 10
4D1–E4613–00	7 – 10
BKW–E4711–00	7 – 1
BKW–E4718–00	7 – 2
29B–E4747–00	28 – 48
BKW–E4757–00	7 – 4
31C–E5113–00	9 – 9
1FC–E5150–00	8 – 1
16S–E5155–00	8 – 5
16S–E5362–10	9 – 19
5VT–E5371–00	8 – 2
16S–E5377–01	9 – 12
BKW–E5411–00	9 – 1
BKW–E5418–00	9 – 10
BKW–E5421–00	9 – 13
1FC–E5451–10	9 – 2
1FC–E5461–10	9 – 14
2P2–E5512–00	10 – 1
1FC–E5524–00	10 – 3
5C6–E5580–01	10 – 6
1FC–E6116–00	11 – 1
1FP–E6135–00	11 – 23
1FP–E6150–01	11 – 13
1FP–E6320–10	11 – 17
1FP–E6321–10	11 – 16
1FP–E6324–00	11 – 15
1FP–E6333–00	11 – 20
5VT–E6346–00	14 – 9
1FP–E6351–10	11 – 19
16S–E6356–00	11 – 26
1FC–E6357–00	11 – 25
1FP–E6371–10	11 – 14
1FP–E6383–20	11 – 18

PART NO.	REF. NO.
B6A–E6512–00	11 – 6
5D9–E6586–00	11 – 7
B6A–E6586–00	11 – 7
1FP–E6611–11	11 – 2
1FP–E6620–01	11 – 3
1FP–E6626–00	11 – 4
1S9–E6628–00	11 – 22
1FP–E6777–20	11 – 21
1FC–E7121–10	12 – 6
1FC–E7131–00	12 – 2
1FC–E7141–00	12 – 3
1FC–E7211–10	12 – 18
1FC–E7231–00	12 – 17
1FC–E7241–00	12 – 16
1FC–E7402–10	12 – 13
1FC–E7411–10	12 – 1
1PB–E7456–00	12 – 28
16S–E7471–00	12 – 11
1FP–E8101–00	14 – 1
BKW–E8110–00	14 – 23
5HU–E8113–00	14 – 24
1FC–E8120–00	13 – 7
BBK–E8140–00	14 – 7
1FP–E8172–01	14 – 3
5VT–E8173–00	14 – 15
1FP–E8179–01	14 – 2
1FD–E817A–00	14 – 16
1FP–E8181–00	14 – 4
2SU–E8185–00	13 – 2
5D9–E8186–00	14 – 17
1FC–E8337–00	14 – 8
1JD–E8511–00	13 – 11
1JD–E8512–00	13 – 12
5VT–E8531–00	13 – 9
2VP–E8540–00	13 – 1
1FC–E8542–00	13 – 5
1DY–E8545–00	12 – 21
1FC–E8561–00	12 – 22
16S–E8563–00	12 – 30
1FC–E8699–00	14 – 22
BKW–F1110–00	15 – 1
BKW–F117K–00	22 – 12
BKW–F1511–00–P6	16 – 1
BKW–F1511–00–PA	16 – 1
B17–F1568–00	29 – 33
BKW–F1611–00	16 – 3
BKW–F1629–00	16 – 6
BKW–F164F–00	16 – 13

PART NO.	REF. NO.
BNT–F1668–00	18 – 15
BKW–F1711–00	17 – 1
BKW–F1716–00–P6	17 – 24
BKW–F1716–00–PA	17 – 24
B5V–F1717–00	16 – 7
	25 – 44
BAX–F1717–00	16 – 7
	25 – 44
BKW–F171A–00	17 – 19
BKW–F171E–00–P0	17 – 16
BKW–F1721–00	17 – 3
BKW–F1726–00–P6	17 – 27
BKW–F1726–00–PA	17 – 27
BKW–F1731–00–P0	17 – 6
BNS–F173X–00	17 – 34
BNS–F173X–30	17 – 34
BNS–F173Y–00	17 – 35
BNS–F173Y–30	17 – 35
BKW–F1741–00–P0	17 – 11
BNS–F174G–00	17 – 32
	17 – 33
BNS–F174G–30	17 – 32
	17 – 33
BKW–F175C–00	29 – 34
	29 – 35
BKW–F194J–00	28 – 50
BNT–F2100–00	18 – 1
5BP–F2129–02	18 – 3
BKW–F2141–00	18 – 5
BKW–F2151–00	18 – 4
BKW–F2210–00	18 – 11
BKW–F2311–00	18 – 8
BNT–F3102–00	20 – 1
BNT–F3103–00	20 – 23
BNT–F3110–00	20 – 6
	20 – 28
3XX–F3111–00	20 – 16
	20 – 38
3XX–F3114–00	20 – 17
	20 – 39
BNT–F3118–00	20 – 15
	20 – 37
BKW–F3121–00	19 – 31
BKW–F3123–00	19 – 28
BNT–F3126–00	20 – 2
BKW–F3131–01	19 – 32
BNT–F3136–00	20 – 24
BNT–F3141–00	20 – 13

PART NO.	REF. NO.
BNT–F3141–00	20 – 35
2FS–F3144–00	20 – 5
	20 – 27
2FS–F3145–00	20 – 3
	20 – 25
3XL–F3146–10	20 – 14
	20 – 36
BNT–F3152–00	20 – 8
	20 – 30
3V3–F3156–00	20 – 4
	20 – 26
BNT–F3157–00	20 – 9
	20 – 31
509–F3158–L0	20 – 11
	20 – 33
3XX–F3168–00	20 – 18
	20 – 40
BNT–F3170–00	20 – 7
	20 – 29
BNT–F3173–00	20 – 10
	20 – 32
BNT–F3174–00	19 – 23
BKW–F317J–00	19 – 26
31D–F3181–50	20 – 12
	20 – 34
BKW–F3191–00	20 – 19
	20 – 41
BKW–F3192–00	20 – 20
	20 – 42
BKW–F3194–00	20 – 21
	20 – 43
BKW–F3317–00	19 – 21
5HH–F3346–00	20 – 48
BNT–F334M–00	20 – 45
BKW–F3357–00	20 – 22
	20 – 44
BKW–F3377–00	19 – 24
4FP–F3411–10	20 – 47
4RT–F3411–10	19 – 4
1KL–F3412–10	19 – 1
4RT–F3412–10	19 – 3
5P1–F3416–01	19 – 6
1SK–F3418–00	19 – 7
1P6–F341E–10	19 – 5
5VL–F341E–10	19 – 2
BKW–F3435–00	19 – 12
BKW–F3441–00	19 – 14
5YY–F3462–00	20 – 46

PART NO.	REF. NO.
BNT–F3487–00	19 – 37
BKW–F3874–01	19 – 20
BKW–F4110–00	21 – 1
1FC–F412G–00	21 – 3
1DB–F414G–01	21 – 7
BKW–F414H–00	21 – 16
BKW–F414J–00	21 – 17
BKW–F4181–00	21 – 14
BKW–F41B1–00	21 – 19
1FC–F4339–00	21 – 4
BKW–F4491–00	21 – 8
4YY–F4610–00	21 – 12
4YY–F4612–00	21 – 13
BKW–F4662–00	22 – 6
BKW–F4710–00	22 – 1
BKW–F4723–00	22 – 3
BKW–F4727–00	22 – 5
BKW–F472T–00	22 – 18
BKW–F4741–00	22 – 2
16S–F4741–10	22 – 16
BKW–F4750–00	22 – 15
BKW–F476F–00	22 – 4
BKW–F4773–00	22 – 20
B5V–F4780–10	22 – 8
BKW–F478E–00	22 – 10
BKW–F4799–00	22 – 11
BKW–F5104–00	23 – 8
1FC–F5111–00–WN	23 – 1
BJ7–F5181–00	23 – 11
1FC–F518A–00	24 – 1
BKW–F5190–00	23 – 13
BKW–F5304–00	25 – 28
1S9–F530K–00	25 – 8
1S9–F5311–00–WN	25 – 1
1S9–F5321–00–WN	25 – 7
16S–F533A–00	25 – 12
1S9–F5351–00	25 – 13
BKW–F5355–00	25 – 11
1FC–F5364–00	25 – 6
BKW–F5365–00	25 – 43
16S–F5366–00	25 – 16
BKW–F5371–00	25 – 41
1FC–F5377–00	25 – 34
1S9–F5381–10	25 – 30
16S–F5383–00	25 – 33
5TF–F5389–00	25 – 35
5TF–F539F–00	25 – 36
1FC–F5414–00	25 – 24

PART NO.	REF. NO.
1FC–F5440–00	25 – 20
2BM–F5802–00	24 – 5
5YP–F5803–50	24 – 6
2BM–F5805–00	24 – 10
5P0–F580A–00	27 – 6
2PH–F580U–01	24 – 4
1FC–F582U–11	24 – 2
2ND–F583T–03	27 – 4
2ND–F5852–00	27 – 8
2ND–F5854–00	27 – 7
2ND–F5855–00	27 – 11
5TL–F5867–11	27 – 12
2ND–F5870–00	27 – 5
BKW–F5872–00	27 – 1
BKW–F5875–00	19 – 16
BKW–F5876–00	19 – 18
2BM–F5917–00	24 – 7
2BM–F5919–00	24 – 14
2BM–F5920–00	24 – 12
5YP–F5924–00	24 – 15
5YP–F5925–01	24 – 11
5YP–F5937–00	24 – 8
2BM–F5939–00	24 – 13
BKW–F6111–00	26 – 1
1S8–F622F–00	26 – 12
BKW–F622H–00	26 – 11
BKW–F6240–00	26 – 4
BKW–F6241–00	26 – 5
BKW–F6246–00	26 – 9
B5V–F6257–00	26 – 10
BKW–F6280–00	26 – 6
BKW–F6290–00	26 – 7
BKW–F629N–10	26 – 2
BKW–F6301–00	26 – 8
BKW–F7111–00	28 – 1
1FC–F7112–00	28 – 3
1FC–F7114–11	28 – 2
BKW–F7116–00	28 – 25
BKW–F7211–00	28 – 7
BKW–F7231–00	28 – 9
BKW–F7261–00	14 – 25
BKW–F7311–00	28 – 15
BKW–F7316–00	28 – 29
BKW–F7411–00	28 – 22
BKW–F7426–00	28 – 8
BSM–F7431–00	28 – 33
BKW–F7432–00	28 – 32
BSM–F7441–00	28 – 41
BKW–F7442–00	28 – 40
BKW–F7451–00	28 – 24
BKW–F7461–00	28 – 28
BNT–F8100–00	22 – 23
BKW–F8321–00	15 – 9
BKW–F8322–00	15 – 11
BKW–F835U–00–P0	29 – 7
BKW–F835V–00–P0	29 – 11
BKW–F8365–00–P6	29 – 1
BKW–F8365–00–P8	29 – 1
BKW–F8368–00	17 – 30
	17 – 31
BKW–F836K–00	29 – 21
BKW–F836L–00	29 – 27
BKW–F8378–00	29 – 4
BKW–F837L–00–P6	29 – 15
BKW–F837L–00–P8	29 – 15
BKW–F837M–00–P6	29 – 18
BKW–F837M–00–P8	29 – 18
B6F–H1410–02	30 – 2
B6F–H1450–11	30 – 1
BKW–H1662–00	37 – 22
BBK–H1800–12	31 – 1
5D9–H1828–00	31 – 4
1FC–H183G–00	31 – 5
BBK–H1861–00	31 – 3
5TP–H1940–01	38 – 11
2BL–H1960–10	38 – 9
55D–H2100–00	37 – 4
2CB–H2100–01	37 – 4
BKW–H2116–00	37 – 9
BKW–H212B–00	37 – 5
BKW–H2131–00	37 – 8
45P–H2133–00	36 – 3
2BM–H2151–01	37 – 16
B8A–H2151–11	37 – 17
B5V–H2151–90	37 – 18
B5V–H2310–01	37 – 1
2PH–H2370–10	37 – 3
BKW–H246B–00	38 – 12
BKW–H2501–00	37 – 10
1FC–H2530–01	37 – 14
16S–H2540–00	38 – 3
BKW–H2568–00	37 – 12
BKW–H2590–00	37 – 15
BNT–H3310–00	32 – 1
1VP–H3311–00	32 – 3
	32 – 7
1VP–H3311–00	32 – 12
	32 – 16
1VP–H3318–00	32 – 9
	32 – 18
BNT–H3320–00	32 – 5
BNT–H3330–00	32 – 10
1VP–H3333–00	32 – 4
	32 – 8
	32 – 13
	32 – 17
1VP–H333A–00	32 – 6
	32 – 11
BNT–H3340–00	32 – 14
1VP–H334A–00	32 – 2
	32 – 15
B3F–H3350–10	38 – 14
1ST–H3371–00	38 – 15
BKW–H3510–00	33 – 1
BKW–H3517–00	33 – 2
BKW–H3550–00	33 – 6
B7J–H3591–00	38 – 6
2ND–H3922–00	27 – 13
45P–H395W–00	36 – 4
BKW–H3963–00	36 – 2
BKW–H3972–00	36 – 5
2DP–H3980–01	27 – 16
2BM–H411V–00	35 – 3
5B9–H4192–00	34 – 4
BKW–H4310–00	34 – 1
2ND–H4314–00	34 – 2
1FC–H4393–10	34 – 3
BNT–H4547–00	35 – 9
BKW–H4710–00	35 – 1
4AC–H4714–00	35 – 2
B17–H4726–00	35 – 10
BNT–H4740–00	35 – 7
B17–H4744–00	35 – 8
2FC–H5111–00	16 – 8
BSM–H5111–00	16 – 8
55D–H5130–00	38 – 17
BE1–H5130–00	38 – 17
31B–H5353–00	34 – 5
BKW–H5546–00	38 – 2
BKW–H5752–00	21 – 6
BNT–H591A–00	38 – 1
2BM–H592A–20	38 – 8
4C9–W0048–00	24 – 9
1FC–WE140–50	2 – 1
1PB–WH18E–00	31 – 2
90101–06046	25 – 14
90101–08848	25 – 22
90101–10812	28 – 16
90105–06893	9 – 4
90105–088D9	15 – 6
90105–088E0	15 – 4
90105–088E1	4 – 6
90105–088J8	19 – 15
90105–088K3	19 – 13
90105–10831	24 – 16
90105–10878	18 – 14
90109–06577	27 – 14
90109–068B4	19 – 29
90109–068B5	16 – 4
	17 – 7
	17 – 12
	17 – 17
	17 – 20
	29 – 2
	29 – 22
	29 – 28
	37 – 7
90109–08223	25 – 48
90109–08816	25 – 42
90110–05801	5 – 2
90110–06868	1 – 15
90111–06119	19 – 35
	34 – 13
90111–06162	37 – 11
90111–06807	7 – 3
90111–06885	34 – 8
90111–08815	24 – 3
90116–08850	8 – 10
90119–06810	6 – 27
90119–06885	16 – 2
90149–06159	13 – 3
90159–06838	17 – 8
	17 – 13
90159–06855	22 – 14
90160–05808	29 – 5
90160–05814	29 – 8
	29 – 12
	29 – 26
	29 – 32
90170–05803	3 – 9
90170–06809	25 – 38
90176–22081	19 – 11
90179–06835	28 – 12
90179–08518	1 – 11
90179–08818	15 – 7
90179–08826	25 – 23
90179–10805	15 – 8
90179–12802	11 – 11
90179–14001	11 – 24
90179–25615	19 – 8
90183–05807	16 – 10
	17 – 10
	17 – 15
	17 – 18
	17 – 23
	29 – 3
	29 – 10
	29 – 14
	29 – 17
	29 – 20
	29 – 25
	29 – 31
	34 – 6
90185–05803	16 – 9
90185–12804	25 – 31
90201–06079	34 – 11
90201–06557	19 – 34
	19 – 36
90201–06856	33 – 5
90201–08055	7 – 6
90201–08057	25 – 21
90201–08116	7 – 7
90201–10035	28 – 19
90201–10118	27 – 3
90201–10141	18 – 13
90201–12019	11 – 10
90201–12190	18 – 6
90201–122H1	30 – 6
90201–127F4	14 – 10
90201–12824	14 – 14
90201–12833	25 – 32
90201–15700	12 – 7
	12 – 19
90201–167P7	11 – 5
90201–178D3	14 – 21
90201–19801	10 – 5
90201–220T0	19 – 10
90202–26142	19 – 9
90206–14001	14 – 26
90209–17285	12 – 4
90209–18208	12 – 14
90240–10800	28 – 26
	28 – 30
90249–12008	28 – 11
90269–06816	16 – 12
	17 – 21
	37 – 13
	38 – 13
90280–03017	2 – 6
90338–15821	15 – 3
	28 – 38
	28 – 46
90338–18122	22 – 22
90338–26136	9 – 22
90340–12816	5 – 3
90340–14824	9 – 7
90387–05831	35 – 4
90387–06803	6 – 26
90387–068G3	34 – 10
90387–068P5	33 – 4
90387–068S1	18 – 10
90387–08812	28 – 49
90387–10003	28 – 18
90387–10835	23 – 10
90387–12860	25 – 2
90387–12868	25 – 17
90387–12874	18 – 2
90387–15817	12 – 23
90387–20810	11 – 12
90401–10812	27 – 2
90430–10806	38 – 7
90430–10807	1 – 5
90430–12803	5 – 4
90445–18806	28 – 21
90445–22800	28 – 6
90464–07018	17 – 5
	17 – 26
	17 – 29
	29 – 6
	29 – 9
	29 – 13
90464–10008	21 – 11
90464–25004	36 – 1
90464–36007	35 – 12
90464–36800	21 – 15
	37 – 20
90464–70800	37 – 21
90467–110A3	6 – 22

PART NO.	REF. NO.
90467–12802	6 – 24
90467–13807	6 – 28
	8 – 4
90480–01558	15 – 2
	19 – 27
	22 – 13
90480–01559	17 – 22
	29 – 24
	29 – 30
	37 – 6
90480–12826	35 – 5
90480–13567	19 – 30
90480–13815	19 – 33
90480–14825	34 – 9
90501–04805	11 – 9
90501–06022	13 – 6
90501–06800	13 – 10
90501–10245	28 – 10
90501–125E9	14 – 13
90501–12743	28 – 35
	28 – 43
90506–12001	25 – 9
90506–15001	25 – 10
90506–26814	28 – 20
90506–35806	28 – 5
90508–26815	13 – 8
90520–02803	21 – 18
90560–10292	23 – 2
91312–05010	12 – 29
91312–06012	10 – 7
91317–06025	27 – 17
91317–06030	26 – 13
91332–05010	21 – 9
91332–06012	12 – 12
91332–06016	30 – 4
91332–06020	6 – 3
91332–06025	30 – 3
91401–25015	28 – 37
	28 – 45
91401–30030	28 – 4
91402–20012	25 – 47
	28 – 13
91402–25015	28 – 27
	28 – 31
91702–08035	28 – 34
	28 – 42
91810–14808	1 – 14
	8 – 6
91810–14808	8 – 9
	9 – 3
	9 – 15
92902–06600	28 – 14
92902–08200	25 – 45
93101–10843	9 – 21
93102–12808	14 – 5
93102–20805	12 – 26
93106–20808	23 – 3
93106–26823	25 – 18
93210–06807	14 – 18
93210–12801	4 – 3
93210–14899	9 – 8
93210–19804	9 – 20
93210–198F9	9 – 20
93210–21802	38 – 4
93210–29803	31 – 6
93210–29805	31 – 6
93210–29809	6 – 2
93210–41041	25 – 5
93210–60801	5 – 11
93306–002XK	4 – 4
	12 – 24
93306–054XH	4 – 2
93306–054Y2	12 – 9
93306–054YK	25 – 19
93306–252XN	12 – 10
93306–254Y1	12 – 25
93306–300X9	23 – 4
93306–301YP	25 – 4
93306–301YR	25 – 3
93306–355Y2	2 – 5
93310–419X6	10 – 4
93310–528YX	2 – 3
93340–212Y2	14 – 11
93410–20809	12 – 5
93410–22039	12 – 15
93440–10153	1 – 3
93450–14088	2 – 9
93501–04823	28 – 36
	28 – 44
93503–16807	11 – 27
93604–10801	14 – 12
93604–12800	13 – 4
93606–10800	11 – 8
93608–34800	10 – 2
93608–50149	14 – 6
93812–13837	12 – 27
94109–16800	23 – 5
	25 – 25
94209–16800	23 – 6
	25 – 26
94309–16800	23 – 7
	25 – 27
94421–16801	23 – 9
94421–16802	25 – 29
94568–A6090	4 – 8
94668–L9001	25 – 40
94700–00372	1 – 12
94A40–23110	25 – 39
95022–06012	22 – 9
95022–08014	22 – 17
95027–06025	26 – 3
95302–06600	25 – 15
	25 – 37
95302–08600	25 – 46
95307–10800	18 – 12
95602–06100	27 – 15
95602–10200	23 – 12
	28 – 17
95602–12200	18 – 7
95612–08625	1 – 6
95702–05500	35 – 6
95702–06500	14 – 19
	34 – 12
	38 – 10
95702–08500	7 – 8
95702–12500	30 – 5
95D02–06012	22 – 7
95D02–06016	9 – 11
95D02–08020	7 – 5
95D32–06012	15 – 10
	15 – 12
	38 – 16
95D32–06014	18 – 9
95D32–06016	16 – 14
	22 – 21
95D32–06025	6 – 12
	21 – 2
95D32–06030	1 – 8
95D32–08016	28 – 23
	28 – 51
95D32–08040	7 – 9
95D32–10120	15 – 5
95D37–06010	19 – 38
95D37–06012	19 – 22
95D37–06014	19 – 25
95D37–08020	28 – 39
	28 – 47
95E32–06010	19 – 17
95E32–06014	37 – 19
95E32–06016	6 – 5
	37 – 2
95E32–06020	4 – 14
	5 – 9
	19 – 19
	33 – 3
95E32–06040	8 – 8
	9 – 16
95E32–06050	9 – 5
	9 – 18
95E32–06055	8 – 7
95E32–06060	9 – 6
95E32–06100	5 – 10
95E32–10014	1 – 4
95E37–06030	9 – 17
97012–06020	14 – 27
97602–04312	27 – 18
97702–50012	16 – 11
	29 – 23
	29 – 29
97702–50030	6 – 20
97707–50012	16 – 5
	17 – 2
	17 – 4
	17 – 9
	17 – 14
	17 – 25
	17 – 28
	22 – 19
	29 – 16
	29 – 19
97707–50016	34 – 7
98502–05016	38 – 5
98907–04014	35 – 11
99009–15400	12 – 8
	12 – 20
99009–17400	14 – 20

PG-1
YAMAHA