YAMAHA

PARTS CATALOGUE

MDRNP1

BNC2

XP560D (BYF1) MALAYSIA

YAMAHA GENUINE Parts & Accessories

30BYF-440E1

( )

XP560D
PARTS CATALOGUE
©2025 by Yamaha Motor Co., Ltd.
1st edition, April 2025
All rights reserved.
Any reprinting or unauthorized use
without the written permission of
Yamaha Motor Co., Ltd.
is expressly prohibited.
Printed in Japan.

FOREWORD

This Parts Catalogue is related to the parts for the model(s) on the cover page. When you are ordering replacement parts, please refer to this Parts Catalogue and quote both part numbers and part names correctly.

1. Modifications or additions which have been made after the issue of the Parts Catalogue will be announced in the Parts News.
   It is advisable that you make the necessary corrections to the Parts Catalogue according to the Parts News.

2. Abbreviations
   The following abbreviations are used in this Parts Catalogue.

   "UR" Use specified parts number.

   "UN" Use as many as needed.

   "AP" Alternate Parts

   "LM" Locally Made (Parts need to be ordered locally)

   "F#" Frame No. (Applicable machine No.)

   "O/S" Over Size

3. The number of components for assembly
   - Parts, which are to be supplied in an assembly, are listed with a dot (.) in front of the part name as shown below.
   - The numeral appearing to the right of each component part indicates the quantity of parts for each assembly unit.

PART NO.	DESCRIPTION	Q'TY	REMARKS
2F5–83310–60	FRONT FLASHER LIGHT ASSY	2	
115–83311–60	.BULB (6V–18W)	1	

4. Applicable colours of graphics are represented in the "REMARKS" as shown below.

PART NO.	DESCRIPTION	Q'TY	REMARKS
2N4–24110–00–X5	FUEL TANK COMP.	2	MXR
3J1–24240–10	.GRAPHIC, FUEL TANK	1	FOR MXR

5. Note that the illustrations for reference in finding parts numbers are not to be used for assembling. When assembling, please use the applicable service manual.

6. The asterisk (*) before a reference number indicates modified items after the first edition.

7. Applicable Serial No.

Frame Serial No.

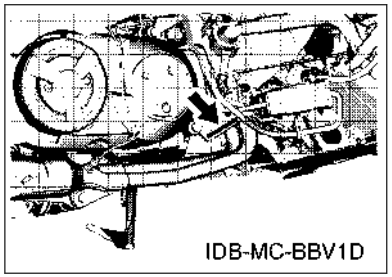

Engine Serial No.

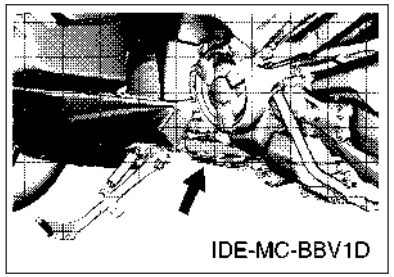

8. Applicable Colour Code (The (*) mark shows Model colour.)

Abbreviation	Colour Name	Colour Code
BNC2(*)	BLUISH GRAY COCKTAIL 2	1862
MBL2	MAT BLACK 2	0582
MDRNP1(*)	MAT DARK REDDISH GRAY PEARL 1	1892
SMX	BLACK METALLIC X	0903

9. Applicable Starting Serial No.

Frame Serial No.

Serial No.	Name Of Q'ty Column	Model Code

Engine Serial No.

Serial No.	Name Of Q'ty Column	Model Code

CONTENTS

PERIODIC MAINTENANCE PARTS..... 1
MAINTENANCE PARTS KIT..... 2

ENGINE

CYLINDER.....3
CRANKSHAFT & PISTON.....4
VALVE..... 6
CAMSHAFT & CHAIN..... 8
WATER PUMP..... 9
RADIATOR & HOSE.....10
OIL PUMP.....12
INTAKE.....13
INTAKE 2.....14
EXHAUST.....15
CRANKCASE..... 17
CRANKCASE COVER 1.....18
CRANKCASE COVER 2.....19
STARTER.....21
CLUTCH..... 22
CLUTCH 2..... 23
TRANSMISSION..... 25

CHASSIS

FRAME..... 26
FENDER.....28
SIDE COVER.....29
SIDE COVER 2.....32
REAR ARM & SUSPENSION.....33
STEERING..... 36
FRONT FORK..... 37
FUEL TANK.....39
SEAT..... 41
SEAT 2..... 42
FRONT WHEEL.....44
FRONT BRAKE CALIPER.....45
REAR WHEEL.....46
REAR BRAKE CALIPER..... 47
STEERING HANDLE & CABLE.....49
FRONT MASTER CYLINDER..... 50
STAND & FOOTREST.....52
STAND & FOOTREST 2.....54
LEG SHIELD.....56
WINDSHIELD..... 58
GENERATOR.....61
METER..... 62
HEADLIGHT..... 63
TAILLIGHT.....64
HANDLE SWITCH & LEVER.....65
ELECTRICAL 1.....66
ELECTRICAL 2.....69
ELECTRICAL 3.....70

INDEX

NUMERICAL INDEX.....71

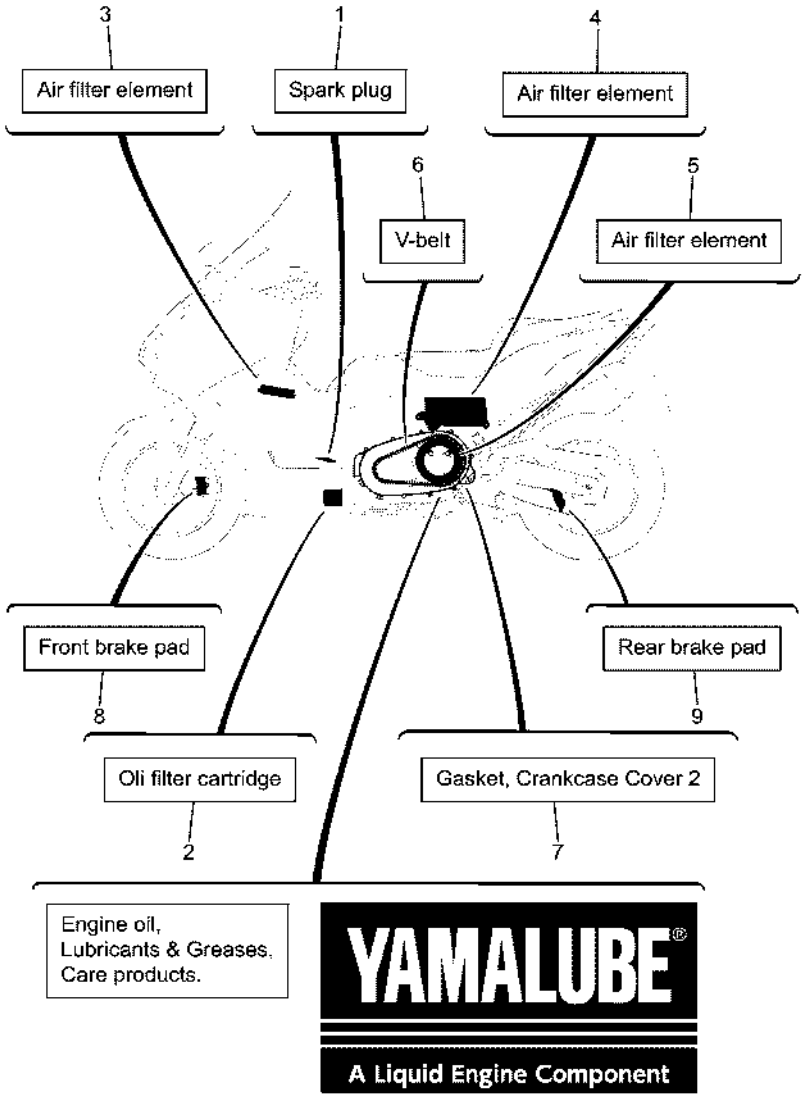

BSV1300D0010

FIG. 1 PERIODIC MAINTENANCE PARTS

REF. NO.	PART NO.	DESCRIPTION	BYF1					REMARKS
1	94701–00443	PLUG, SPARK (NGK LMAR7G)	1					
2	5GH–13440–90	ELEMENT ASSY, OIL CLEANER	1					
3	B7M–14451–01	ELEMENT, AIR CLEANER	1					
4	BBW–15407–00	ELEMENT 1	1					
5	59C–15408–00	ELEMENT 2	1					
6	B7M–17641–10	V-BELT	1					
7	59C–15461–01	GASKET, CRANKCASE COVER 2	1					
8	4B5–25805–00	BRAKE PAD KIT	2					
9	59C–25806–00	BRAKE PAD KIT 2	1					

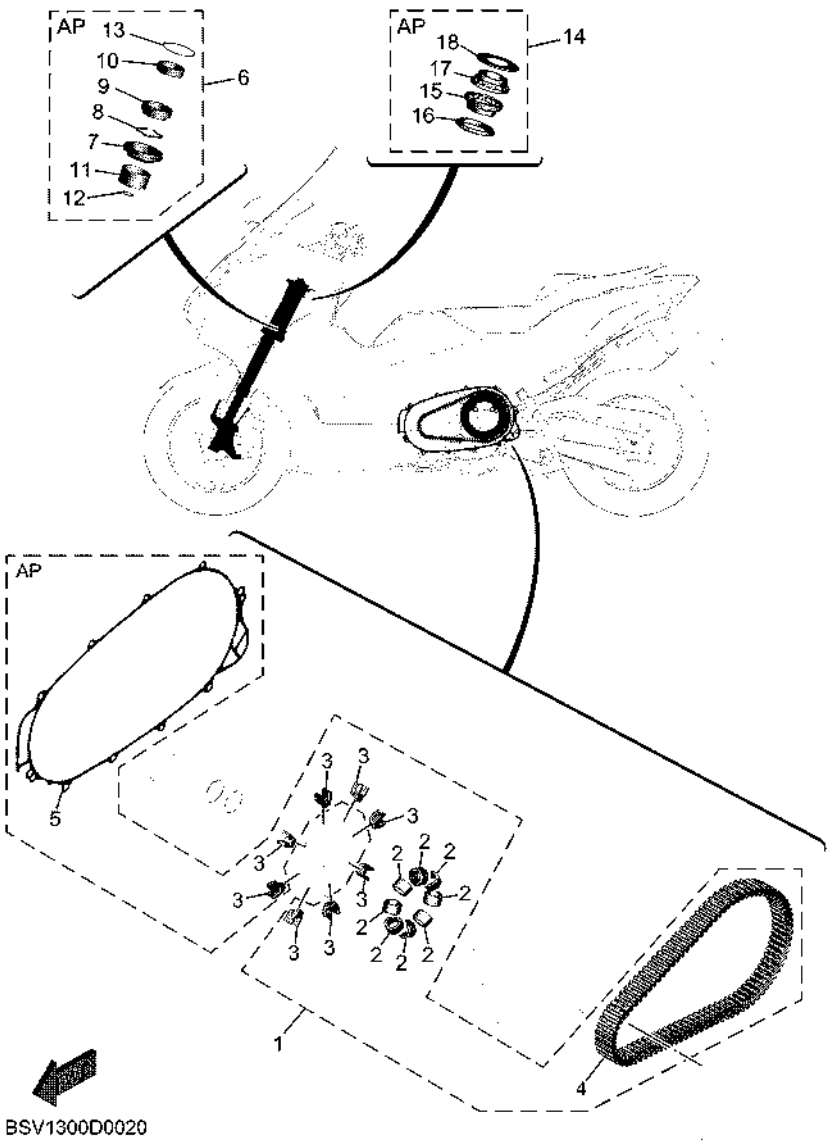

FIG. 2 MAINTENANCE PARTS KIT

REF. NO.	PART NO.	DESCRIPTION	BYF1					REMARKS
1	BBV–W000V–00	V-BELT KIT	1					AP
2	5VU–17632–10	.WEIGHT	8					
3	59C–17653–01	.SLIDER	8					
4	B7M–17641–10	.V-BELT	1					
5	59C–15461–01	.GASKET, CRANKCASE COVER 2	1					
6	BBV–W003B–00	FORK SEALS KIT	1					AP
7	4EB–23144–00	.SEAL, DUST	1					
8	26H–23156–00	.RING, SNAP	1					
9	4EB–23145–01	.OIL SEAL	1					
10	1RC–23125–00	.METAL, SLIDE 1	1					
11	4FM–23171–40	.METAL, SLIDE	1					
12	509–23158–L0	.GASKET	1					(KYB)
13	39P–23147–00	.O-RING	1					
14	BMP–W000B–00	STEERING BEARING KIT	1					AP
15	93399–99957	.BEARING	1					
16	3FV–23462–00	.SEAL, STEERING	1					
17	93399–99932	.BEARING	1					
18	4XV–23415–01	.COVER, BALL RACE 1	1					

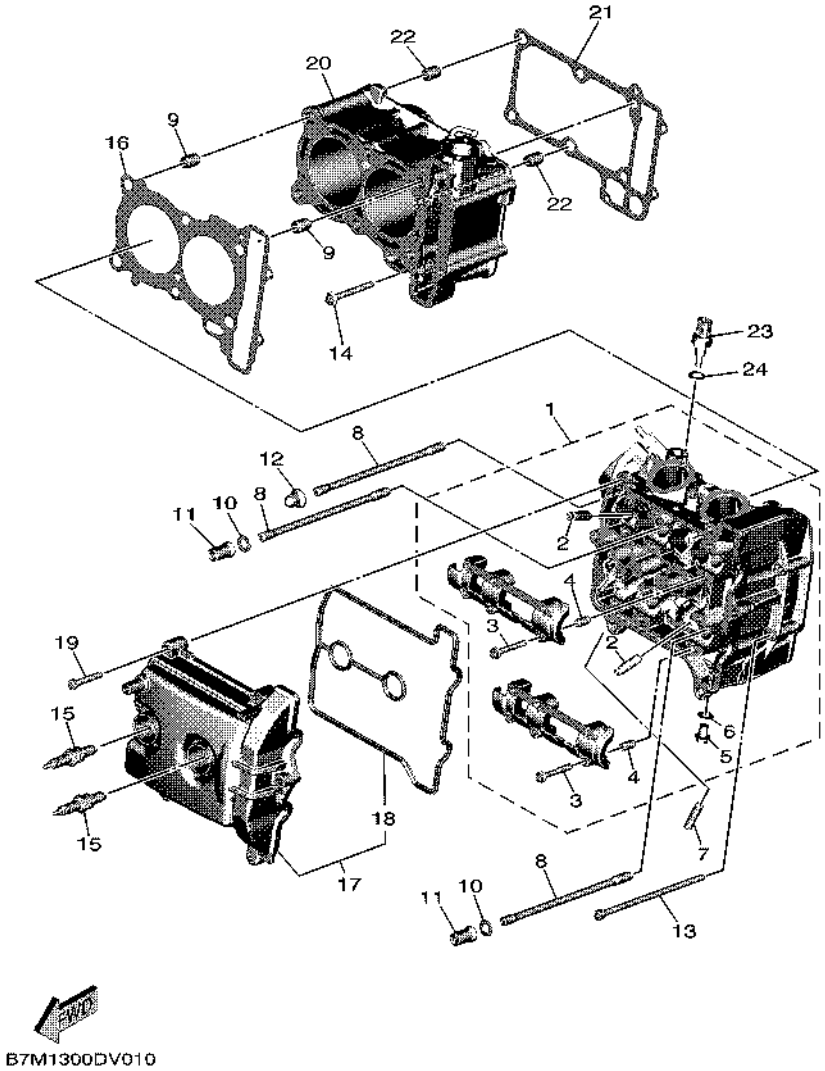

FIG. 3 CYLINDER

REF. NO.	PART NO.	DESCRIPTION	BYF1					REMARKS
1	B7M–11101–09	CYLINDER HEAD ASSY	1					
2	5NL–11133–10	.GUIDE, VALVE 1	8					
3	90105–06027	.BOLT, FLANGE	12					
4	91808–16023	.PIN, DOWEL	2					
5	95E32–08012	.BOLT, FLANGE DEEP RECESS	1					
6	90430–08119	.GASKET	1					
7	95612–08618	BOLT, STUD	4					
8	90116–09584	BOLT, STUD	6					
9	93612–16254	PIN, DOWEL	2					
10	90201–090P4	WASHER, PLATE	4					
11	90179–09612	NUT	4					
12	90176–09001	NUT, CAP	2					
13	90110–06021	BOLT, HEXAGON SOCKET HEAD	2					
14	90110–06379	BOLT, HEXAGON SOCKET HEAD	1					
15	94701–00443	PLUG, SPARK (NGK LMAR7G)	2					
16	B7M–11181–00	GASKET, CYLINDER HEAD 1	1					
17	B7M–11190–01	COVER, CYLINDER HEAD 1	1					
18	B7M–11193–00	.GASKET, HEAD COVER 1	1					
19	91312–06035	BOLT, HEXAGON SOCKET HEAD	6					
20	B7M–11310–09	CYLINDER	1					
21	59C–11351–01	GASKET, CYLINDER	1					
22	93612–16254	PIN, DOWEL	2					
23	4P9–83591–00	THERMO UNIT	1					
24	90430–10004	GASKET	1					

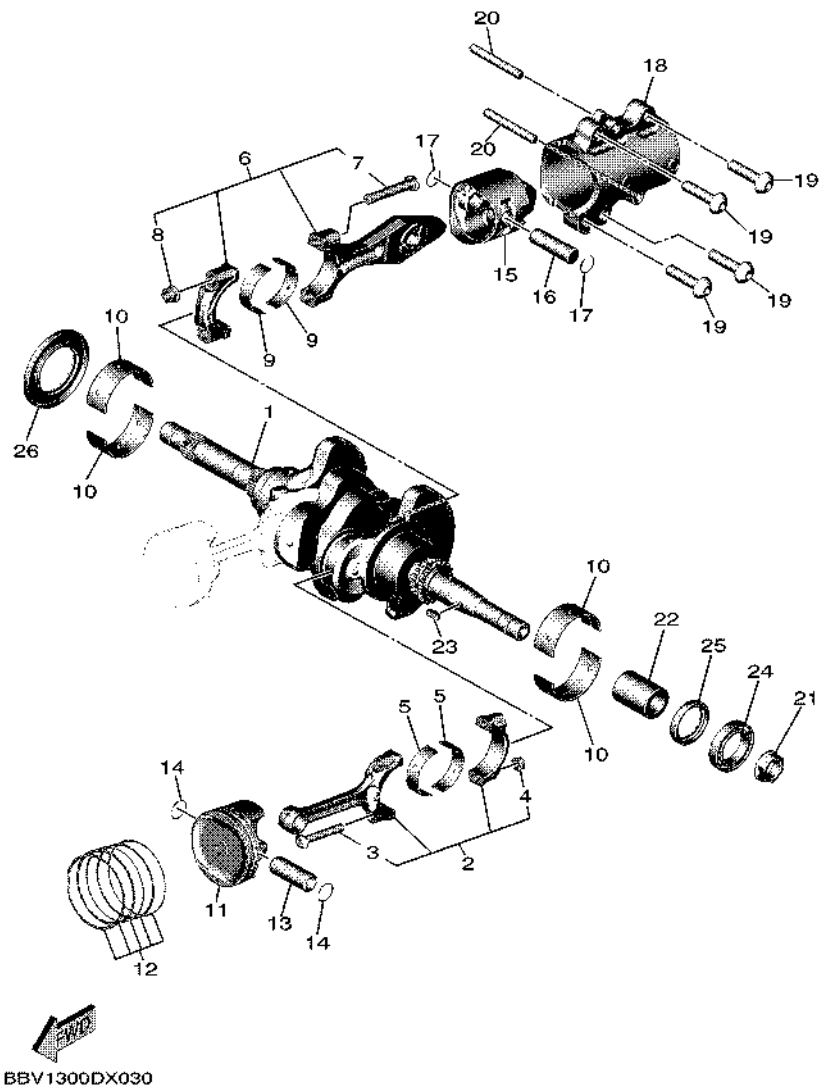

FIG. 4 CRANKSHAFT & PISTON

REF. NO.	PART NO.	DESCRIPTION	BYF1					REMARKS
1	B7M–11400–01	CRANKSHAFT ASSY	1					
2	B7M–11650–00	CONNECTING ROD ASSY	2					
3	5VU–11654–00	.BOLT, CONNECTING ROD	2					
4	90179–07652	.NUT	2					
5	BBW–11656–00	PLANE BEARING, CONNECTING ROD	4					UR BLUE
	BBW–11656–10	PLANE BEARING, CONNECTING ROD	4					UR BLACK
	BBW–11656–20	PLANE BEARING, CONNECTING ROD	4					UR BROWN
	BBW–11656–30	PLANE BEARING, CONNECTING ROD	4					UR GREEN
6	59C–11660–10	CONNECTING ROD ASSY	1					
7	4X7–11654–01	.BOLT, CONNECTING ROD	2					
8	90179–09379	.NUT	2					
9	BBW–11656–00	PLANE BEARING, CONNECTING ROD	2					UR BLUE
	BBW–11656–10	PLANE BEARING, CONNECTING ROD	2					UR BLACK
	BBW–11656–20	PLANE BEARING, CONNECTING ROD	2					UR BROWN
	BBW–11656–30	PLANE BEARING, CONNECTING ROD	2					UR GREEN
10	BBW–11416–01	PLANE BEARING, CRANKSHAFT 1	4					UR BLUE
	BBW–11416–11	PLANE BEARING, CRANKSHAFT 1	4					UR BLACK
	BBW–11416–21	PLANE BEARING, CRANKSHAFT 1	4					UR BROWN
	BBW–11416–31	PLANE BEARING, CRANKSHAFT 1	4					UR GREEN
	BBW–11416–41	PLANE BEARING, CRANKSHAFT 1	4					UR YELLOW
	BBW–11416–A1	PLANE BEARING, CRANKSHAFT 1	4					UR WHITE
11	B7M–11631–00	PISTON (STD)	2					
12	B7M–11603–01	PISTON RING SET (STD)	2					
13	B7M–11633–00	PIN, PISTON	2					
14	93450–18157	CIRCLIP	4					
15	BC3–11642–01–A0	PISTON 2 (STD)	1					
16	5GJ–11455–10	SHAFT 1	1					

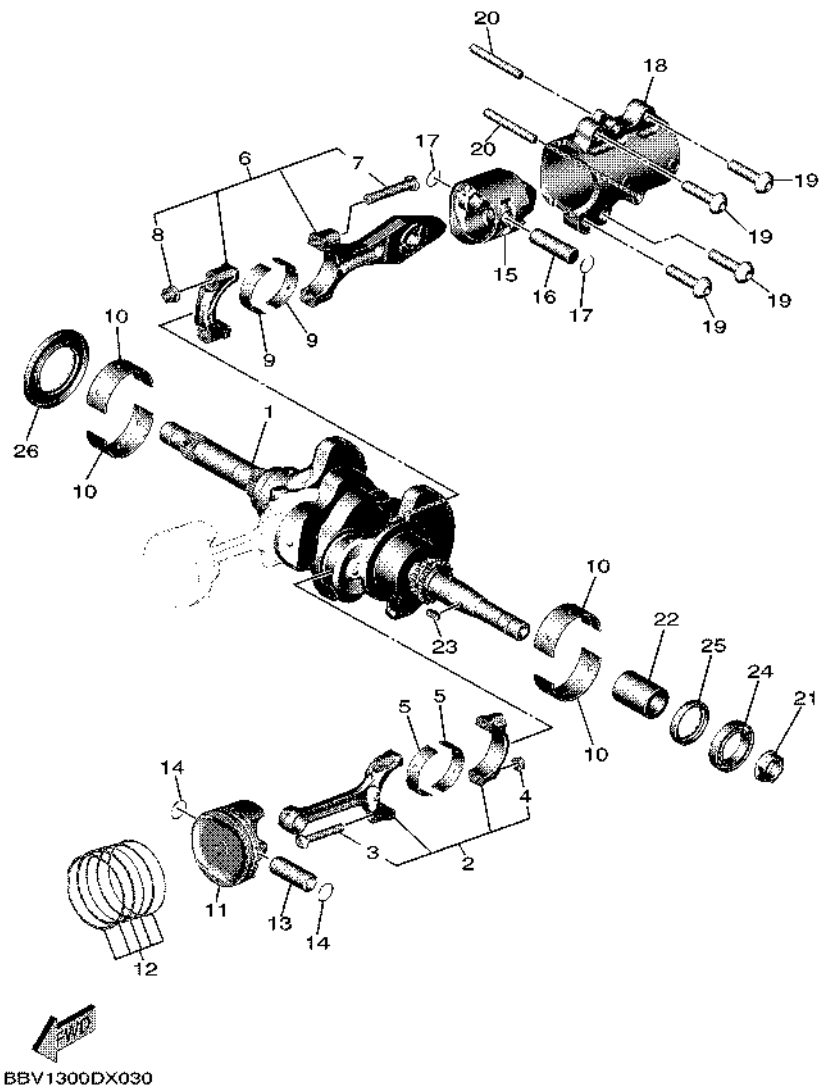

FIG. 4 CRANKSHAFT & PISTON

REF. NO.	PART NO.	DESCRIPTION	BYF1					REMARKS
17	93450–16068	CIRCLIP	2					
18	59C–11312–00	SLEEVE, CYLINDER	1					
19	90111–10026	BOLT, HEXAGON SOCKET BUTTON	4					
20	93608–60001	PIN, DOWEL	2					
21	BBW–13588–00	NUT	1					
22	BBW–11478–00	COLLAR	1					
23	90280–05048	KEY, WOODRUFF	1					
24	93306–90602	BEARING	1					
25	93101–30001	OIL SEAL	1					
26	93102–44008	OIL SEAL	1					

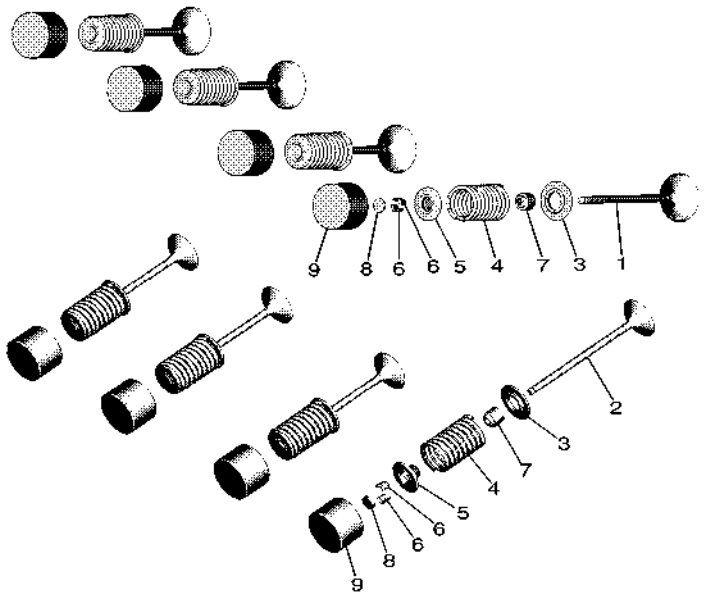

BC31300DS030

FIG. 5 VALVE

REF. NO.	PART NO.	DESCRIPTION	BYF1					REMARKS
1	B7M–12111–00	VALVE, INTAKE	4					
2	59C–12121–01	VALVE, EXHAUST	4					
3	8GC–12126–00	SEAT, VALVE SPRING 2	8					
4	59C–12113–00	SPRING, VALVE INNER	8					
5	3TJ–12117–00	RETAINER, VALVE SPRING	8					
6	1HX–12118–00	LOCK, VALVE SPRING RETAINER	16					
7	4TV–12119–00	SEAL, VALVE STEM	8					
8	1HX–12168–00	PAD, ADJUSTING 2 (1.20)	8					UR
	1HX–12168–20	PAD, ADJUSTING 2 (1.25)	8					UR
	1HX–12168–40	PAD, ADJUSTING 2 (1.30)	8					UR
	1HX–12168–60	PAD, ADJUSTING 2 (1.35)	8					UR
	1HX–12168–80	PAD, ADJUSTING 2 (1.40)	8					UR
	1HX–12168–A0	PAD, ADJUSTING 2 (1.45)	8					UR
	1HX–12168–F0	PAD, ADJUSTING 2 (1.50)	8					UR
	1HX–12168–H1	PAD, ADJUSTING 2 (1.55)	8					UR
	1HX–12168–K1	PAD, ADJUSTING 2 (1.60)	8					UR
	1HX–12168–M1	PAD, ADJUSTING 2 (1.65)	8					UR
	1HX–12168–R1	PAD, ADJUSTING 2 (1.70)	8					UR
	1HX–12168–U1	PAD, ADJUSTING 2 (1.75)	8					UR
	1HX–12168–W1	PAD, ADJUSTING 2 (1.80)	8					UR
	1HX–12168–Y1	PAD, ADJUSTING 2 (1.85)	8					UR
	1HX–12169–11	PAD, ADJUSTING 2 (1.90)	8					UR
	1HX–12169–31	PAD, ADJUSTING 2 (1.95)	8					UR
	1HX–12169–50	PAD, ADJUSTING 2 (2.00)	8					UR
	1HX–12169–70	PAD, ADJUSTING 2 (2.05)	8					UR
	1HX–12169–90	PAD, ADJUSTING 2 (2.10)	8					UR
	1HX–12169–E0	PAD, ADJUSTING 2 (2.15)	8					UR

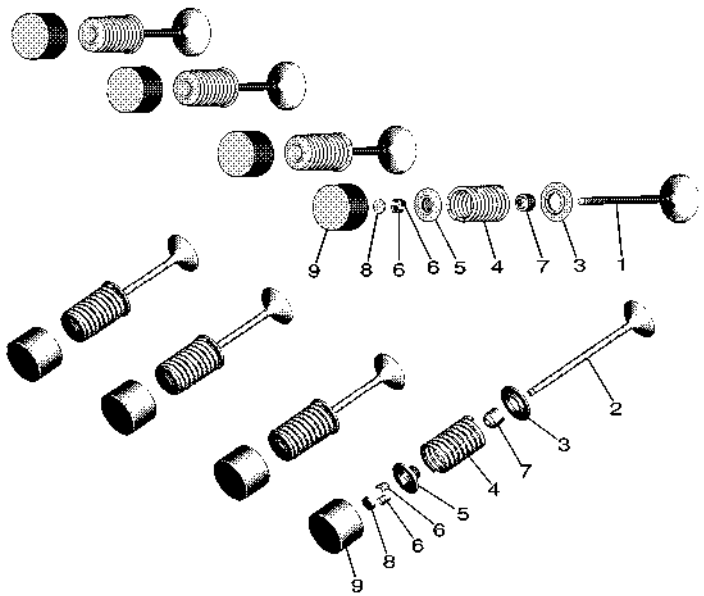

BC31300DS030

FIG. 5 VALVE

REF. NO.	PART NO.	DESCRIPTION	BYF1					REMARKS
8	1HX–12169–G0	PAD, ADJUSTING 2 (2.20)	8					UR
	1HX–12169–J0	PAD, ADJUSTING 2 (2.25)	8					UR
	1HX–12169–L0	PAD, ADJUSTING 2 (2.30)	8					UR
	1HX–12169–N0	PAD, ADJUSTING 2 (2.35)	8					UR
	1HX–12169–T0	PAD, ADJUSTING 2 (2.40)	8					UR
9	B7M–12153–10	LIFTER, VALVE	8					WHITE
	B7M–12153–09	LIFTER, VALVE (O/S)	8					AP ORANGE

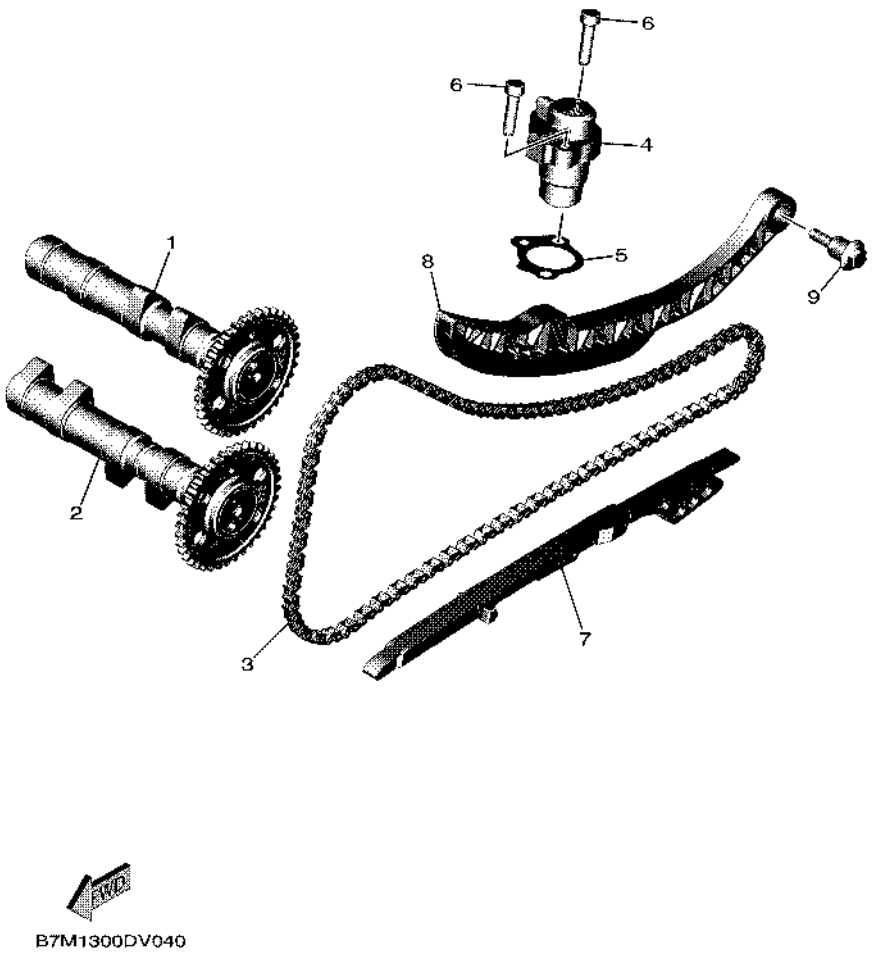

FIG. 6 CAMSHAFT & CHAIN

REF. NO.	PART NO.	DESCRIPTION	BYF1					REMARKS
1	B7M–12170–00	CAMSHAFT ASSY 1	1					
2	B7M–12180–00	CAMSHAFT ASSY 2	1					
3	94591–53134	CHAIN	1					
4	B7M–12210–01	TENSIONER ASSY, CAM CHAIN	1					
5	15B–12213–00	GASKET, TENSIONER CASE	1					
6	91312–06025	BOLT, HEXAGON SOCKET HEAD	2					
7	59C–12251–00	DAMPER, CHAIN 1	1					
8	B7M–12252–00	DAMPER, CHAIN 2	1					
9	90109–06295	BOLT	1					

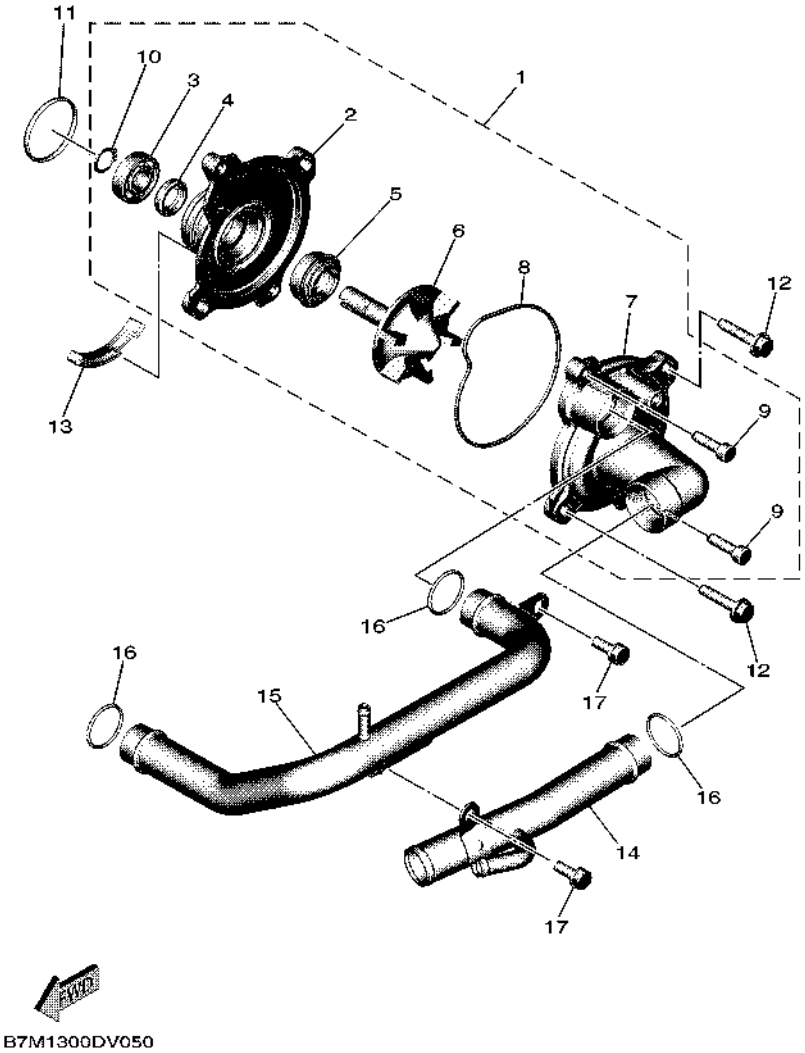

FIG. 7 WATER PUMP

REF. NO.	PART NO.	DESCRIPTION	BYF1					REMARKS
1	59C–12420–10	WATER PUMP ASSY	1					
2	5VU–12421–00	.HOUSING, WATER PUMP	1					
3	93306–00106	.BEARING	1					
4	93102–12442	.OIL SEAL	1					
5	5VK–12438–00	.SEAL, MECHANICAL	1					
6	20S–12450–00	.IMPELLER SHAFT ASSY	1					
7	5GJ–12422–02	.COVER, HOUSING	1					
8	1WG–12439–00	.O-RING	1					
9	91312–06020	.BOLT, HEXAGON SOCKET HEAD	2					
10	99009–12400	.CIRCLIP	1					
11	93210–33133	O-RING	1					
12	90119–06312	BOLT, WITH WASHER	2					
13	59C–12437–00	STOPPER	1					
14	B7M–12481–00	PIPE 1	1					
15	B7M–12482–00	PIPE 2	1					
16	93210–21190	O-RING	3					
17	90119–06270	BOLT, WITH WASHER	2					

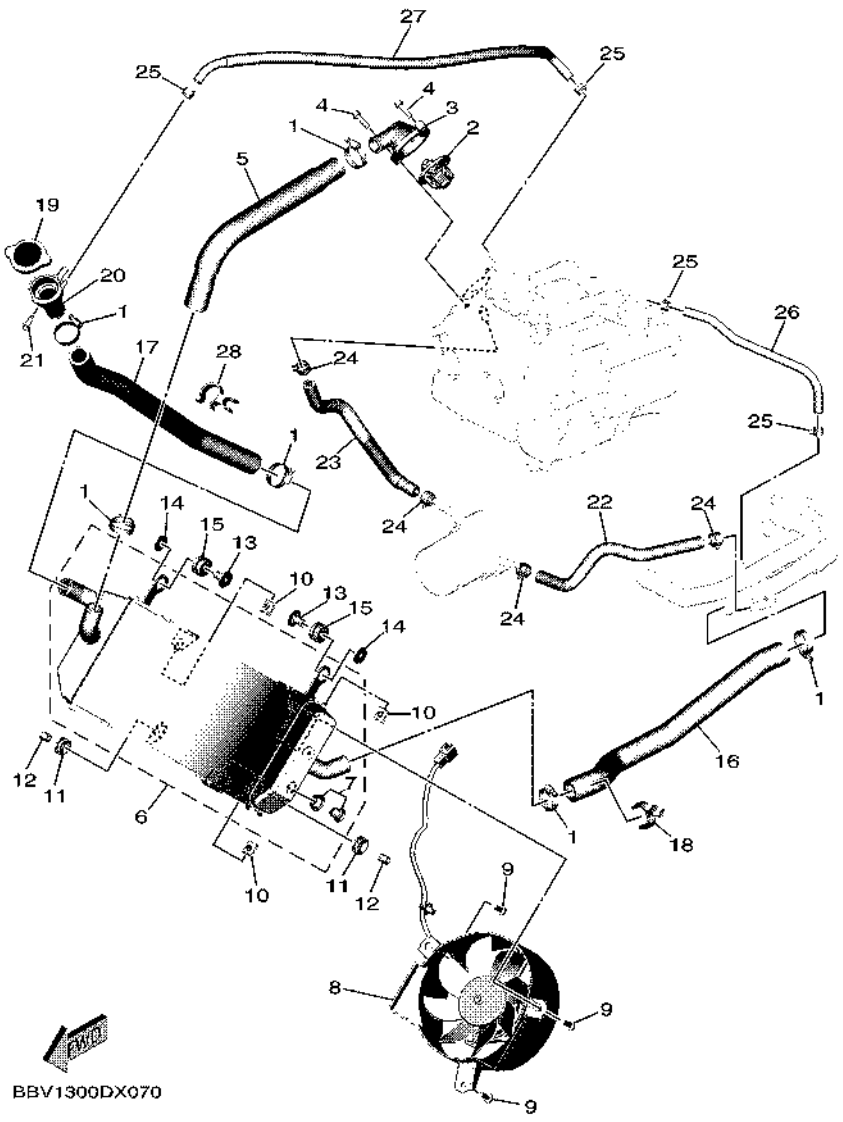

FIG. 8 RADIATOR & HOSE

REF. NO.	PART NO.	DESCRIPTION	BYF1					REMARKS
1	90450–32015	HOSE CLAMP ASSY	6					
2	1WS–12410–01	THERMOSTAT ASSY	1					
3	B7M–12413–00	COVER, THERMOSTAT	1					
4	95E32–06020	BOLT, FLANGE DEEP RECESS	2					
5	B7M–12483–00	PIPE 3	1					
6	BBW–12461–00	RADIATOR COMP	1					
7	5VU–12478–00	.COCK, DRAIN	1					
8	BBW–12405–00	BLOWER ASSY	1					
9	2S3–12675–00	BOLT, BLOWER HOLDING	3					
10	5SL–12671–00	NUT 1	3					
11	90480–16301	GROMMET	2					
12	90387–065L7	COLLAR	2					
13	90387–06065	COLLAR	2					
14	90201–06033	WASHER, PLATE	2					
15	90480–15363	GROMMET	2					
16	BC3–12476–00	PIPE 6	1					
17	BBW–12477–00	PIPE 7	1					
18	90464–28175	CLAMP	1					
19	5SL–12462–01	CAP, RADIATOR	1					
20	5GJ–12591–00	SUPT, FILLER NECK	1					
21	90269–07014	RIVET	1					
22	B7M–1243A–00	HOSE 1	1					
23	B7M–1243E–00	HOSE 2	1					
24	90467–15001	CLIP	4					
25	90467–10038	CLIP	4					
26	BC3–12589–00	HOSE 6	1					
27	BBW–12551–00	HOSE 7	1					

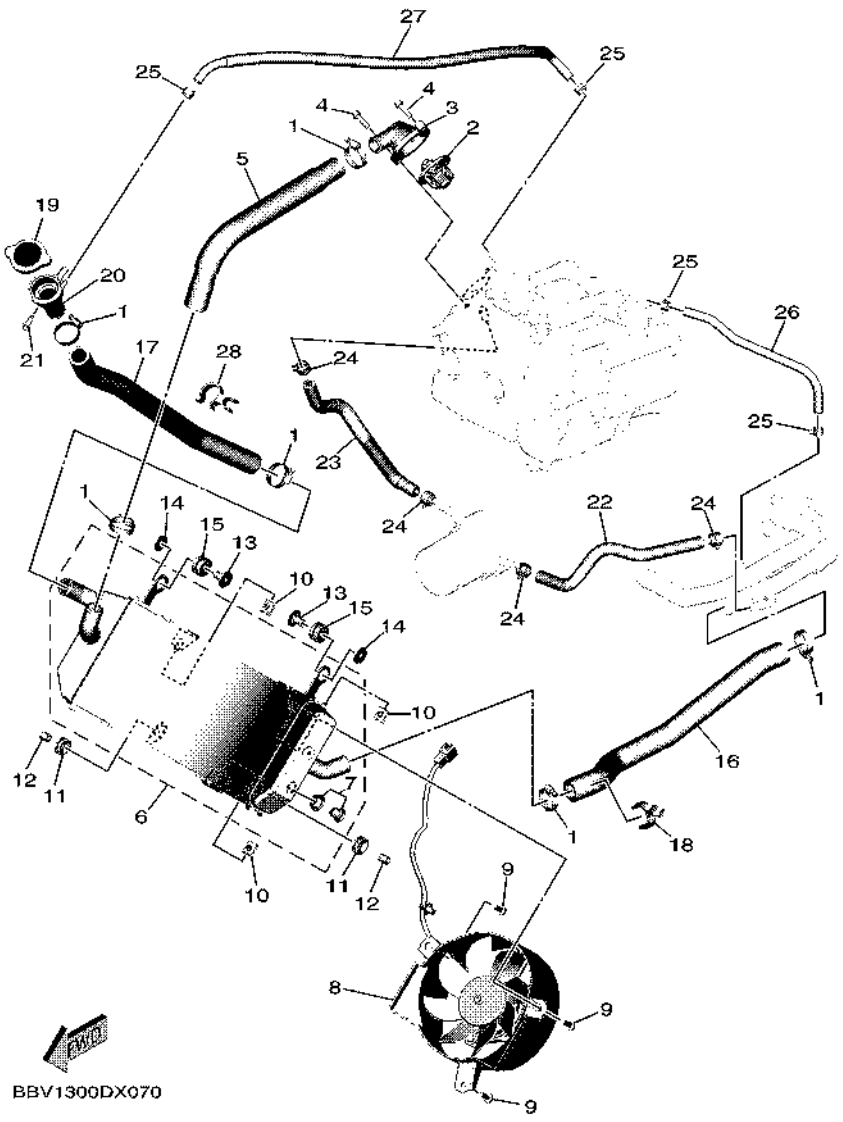

FIG. 8 RADIATOR & HOSE

REF. NO.	PART NO.	DESCRIPTION	BYF1					REMARKS
28	90464–23001	CLAMP	1					

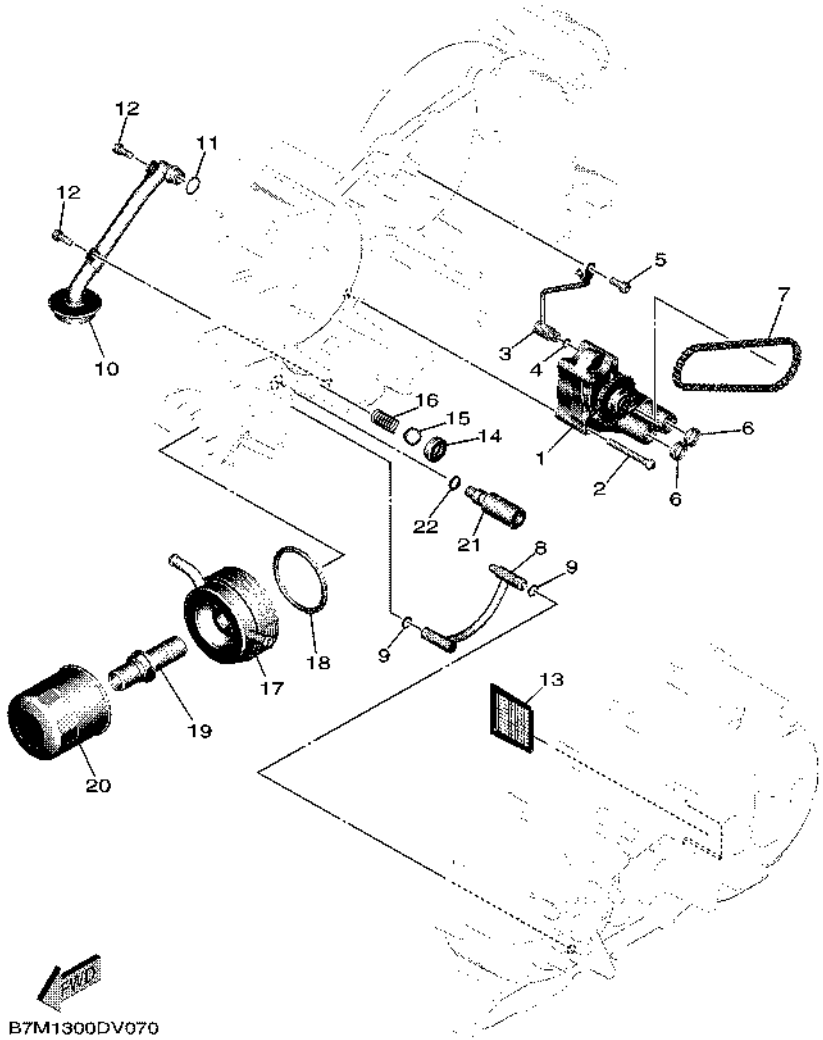

FIG. 9 OIL PUMP

REF. NO.	PART NO.	DESCRIPTION	BYF1					REMARKS
1	59C–13300–01	OIL PUMP ASSY	1					
2	92012–06050	BOLT, BUTTON HEAD	3					
3	5GJ–13161–00	PIPE, DELIVERY 1	1					
4	93210–06422	O-RING	1					
5	90110–06168	BOLT, HEXAGON SOCKET HEAD	1					
6	5GJ–13475–00	GASKET	2					
7	94580–25058	CHAIN (DID25 58L)	1					
8	BBW–13405–00	OIL PIPE COMP. 1	1					
9	93210–09525	O-RING	2					
10	5GJ–13410–00	STRAINER HOUSING ASSY	1					
11	93210–14579	O-RING	1					
12	90110–06168	BOLT, HEXAGON SOCKET HEAD	2					
13	22F–13411–01	STRAINER, OIL	1					
14	3LD–13113–00	SEAT, CHECK BALL	1					
15	93505–08030	BALL	1					
16	90501–104F9	SPRING, COMPRESSION	1					
17	B7M–13470–00	OIL COOLER ASSY	1					
18	1XD–13475–00	GASKET	1					
19	BBW–12858–00	BOLT, UNION	1					
20	5GH–13440–90	ELEMENT ASSY, OIL CLEANER	1					
21	4G0–13490–01	RELIEF VALVE ASSY	1					
22	93210–10096	O-RING	1					

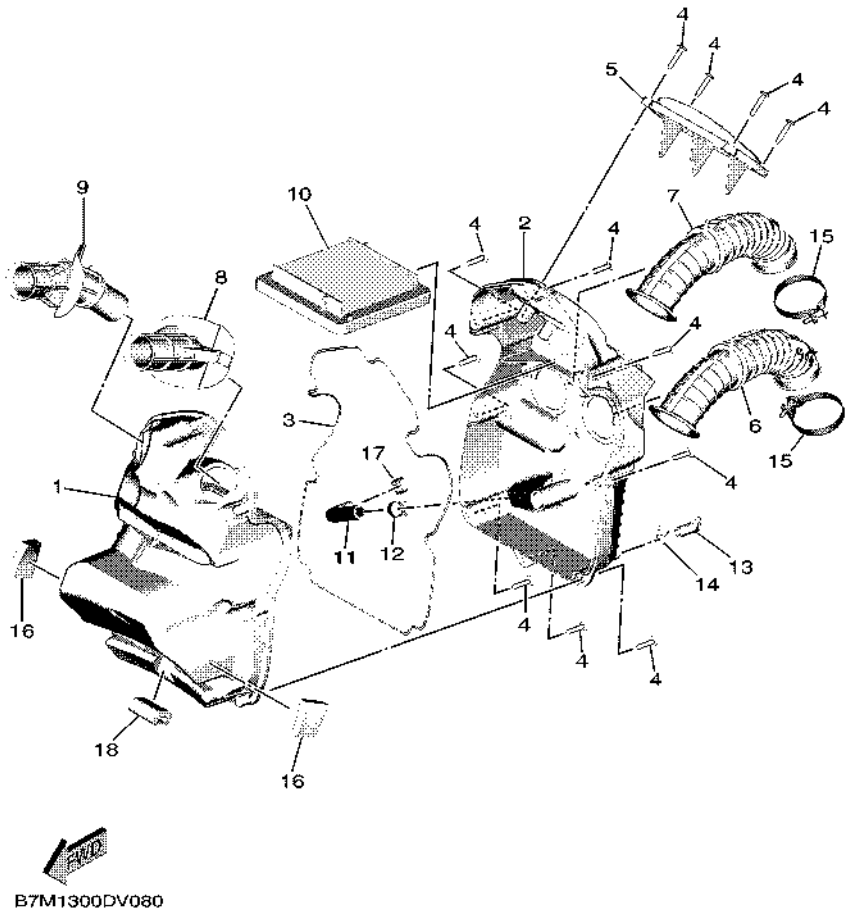

FIG. 10 INTAKE

REF. NO.	PART NO.	DESCRIPTION	BYF1					REMARKS
1	B7M–14411–01	CASE, AIR CLEANER 1	1					
2	B7M–14412–01	CAP, CLEANER CASE 1	1					
3	B7M–14452–00	SEAL	1					
4	90160–05013	SCREW, ROUND TAPPING	12					
5	BSW–1441A–00	COVER, CLEANER CASE 1	1					
6	BSW–14469–00	FUNNEL, AIR	1					
7	BSW–1446C–00	FUNNEL 2	1					
8	BC3–14437–01	DUCT	1					
9	BC3–1443A–01	DUCT	1					
10	B7M–14451–01	ELEMENT, AIR CLEANER	1					
11	B7M–11166–00	PIPE, BREATHER 1	1					
12	90467–15054	CLIP	1					
13	5XT–1443E–00	PIPE, DRAIN	1					
14	90467–11106	CLIP	1					
15	90450–46005	HOSE CLAMP ASSY	2					
16	90520–10036	DAMPER, PLATE	2					
17	90467–15001	CLIP	1					
18	B7M–14409–00	DAMPER	1					

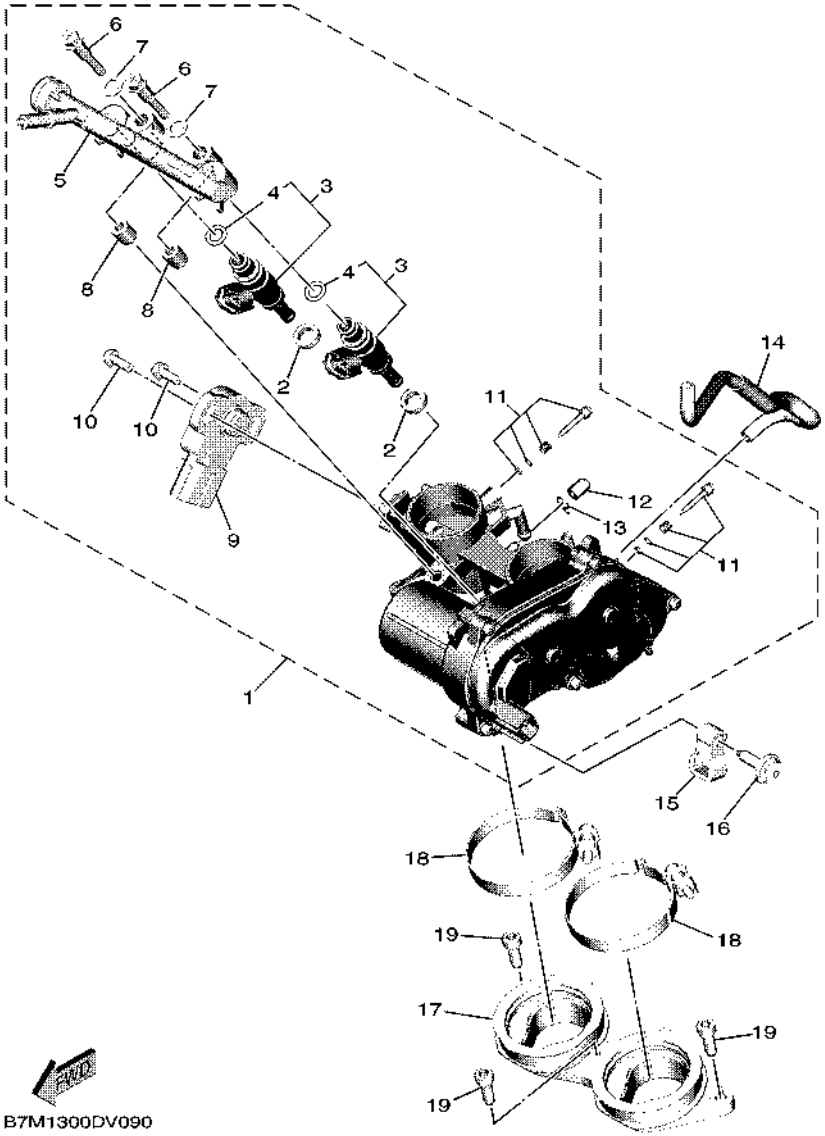

FIG. 11 INTAKE 2

REF. NO.	PART NO.	DESCRIPTION	BYF1					REMARKS
1	B7M–13750–04	THROTTLE BODY ASSY	1					
2	8FP–13556–00	.RUBBER, INJECTOR	2					
3	1WS–13761–00	.INJECTOR	2					
4	5PS–14147–00	..O-RING	1					
5	B7M–13938–00	.PIPE	1					
6	8HG–13573–00	.BOLT 1	2					
7	8GL–13571–00	.WASHER	2					
8	8HG–14534–00	.COLLAR	2					
9	B7M–85885–01	.THROTTLE SENSOR ASSY	1					
10	8CC–14216–10	.SCREW	2					
11	2C0–14105–00	.PILOT SCREW SET	2					
12	895–14169–00	.CAP	1					
13	8A7–14139–00	.CLIP, PIPE	1					
14	B7M–13542–00	HOSE, VACUUM SENSING 1	1					
15	B7M–14435–00	GROMMET	1					
16	90269–06010	RIVET	1					
17	B7M–13635–00	JOINT, INTAKE 1	1					
18	90450–56009	HOSE CLAMP ASSY	2					
19	91312–06016	BOLT, HEXAGON SOCKET HEAD	3					

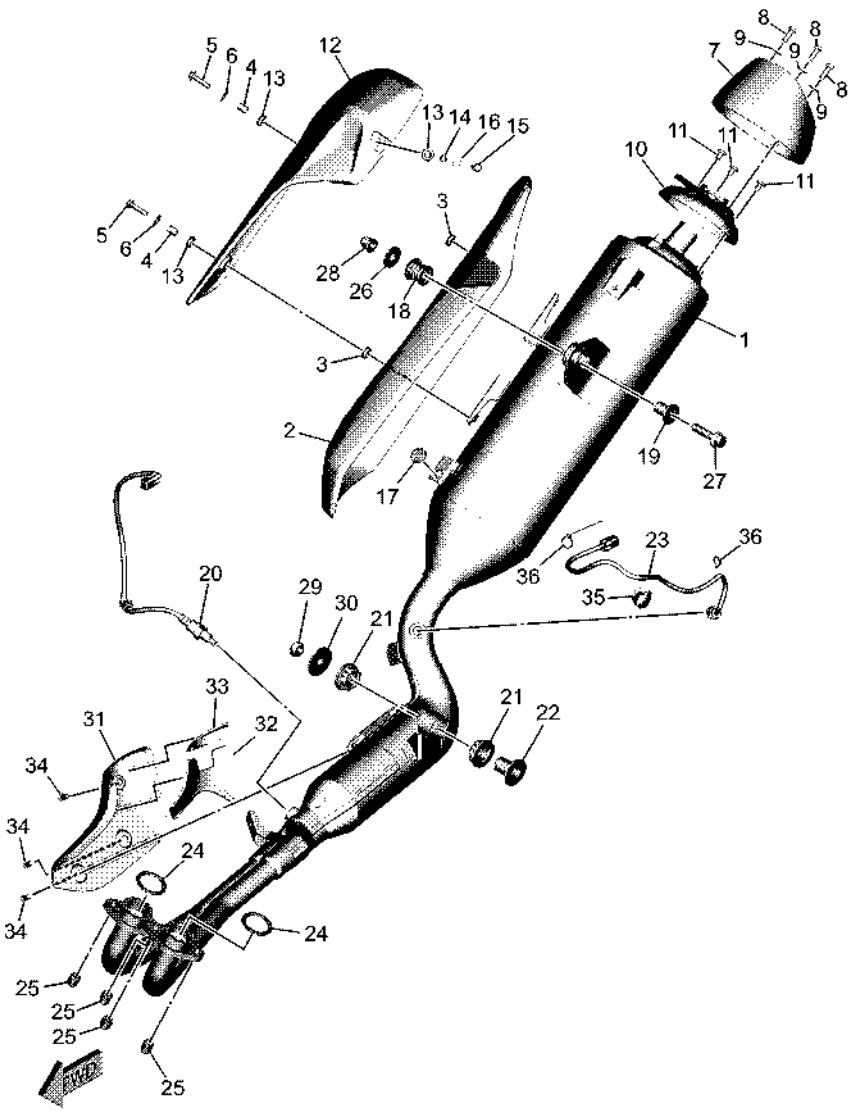

BSV1300D0120

FIG. 12 EXHAUST

REF. NO.	PART NO.	DESCRIPTION	BYF1					REMARKS
1	BSW–14703–00	MUFFLER COMP. 1	1					
2	B7M–1465T–10	PLATE, PROTECTOR 2	1					
3	90480–12581	GROMMET	2					
4	90387–06317	COLLAR	2					
5	92014–06025	BOLT, BUTTON HEAD	2					
6	90201–06079	WASHER, PLATE	2					
7	B7M–14799–00	CAP	1					
8	92014–06016	BOLT, BUTTON HEAD	3					
9	92902–06200	WASHER	3					
10	BC3–14629–00	STAY, PROTECTOR	1					
11	90110–06134	BOLT, HEXAGON SOCKET HEAD	3					
12	BC3–14718–00	PROTECTOR, MUFFLER 1	1					
13	90480–12581	GROMMET	3					
14	90387–06141	COLLAR	1					
15	92014–06016	BOLT, BUTTON HEAD	1					
16	90201–06079	WASHER, PLATE	1					
17	22W–24181–00	DAMPER, LOCATING 1	1					
18	36Y–27424–01	DAMPER, FOOTREST 2	1					
19	90387–10046	COLLAR	1					
20	BC3–8592A–10	SENSOR, OXYGEN	1					
21	B7M–27424–00	DAMPER, FOOTREST 2	2					
22	B7M–14648–00	COLLAR 2	1					
23	BSW–H592A–00	SENSOR, OXYGEN	1					
24	4BR–14613–00	GASKET, EXHAUST PIPE	2					
25	90179–08442	NUT	4					
26	90201–10669	WASHER, PLATE	1					
27	95D32–10045	BOLT, FLANGE DEEP RECESS	1					

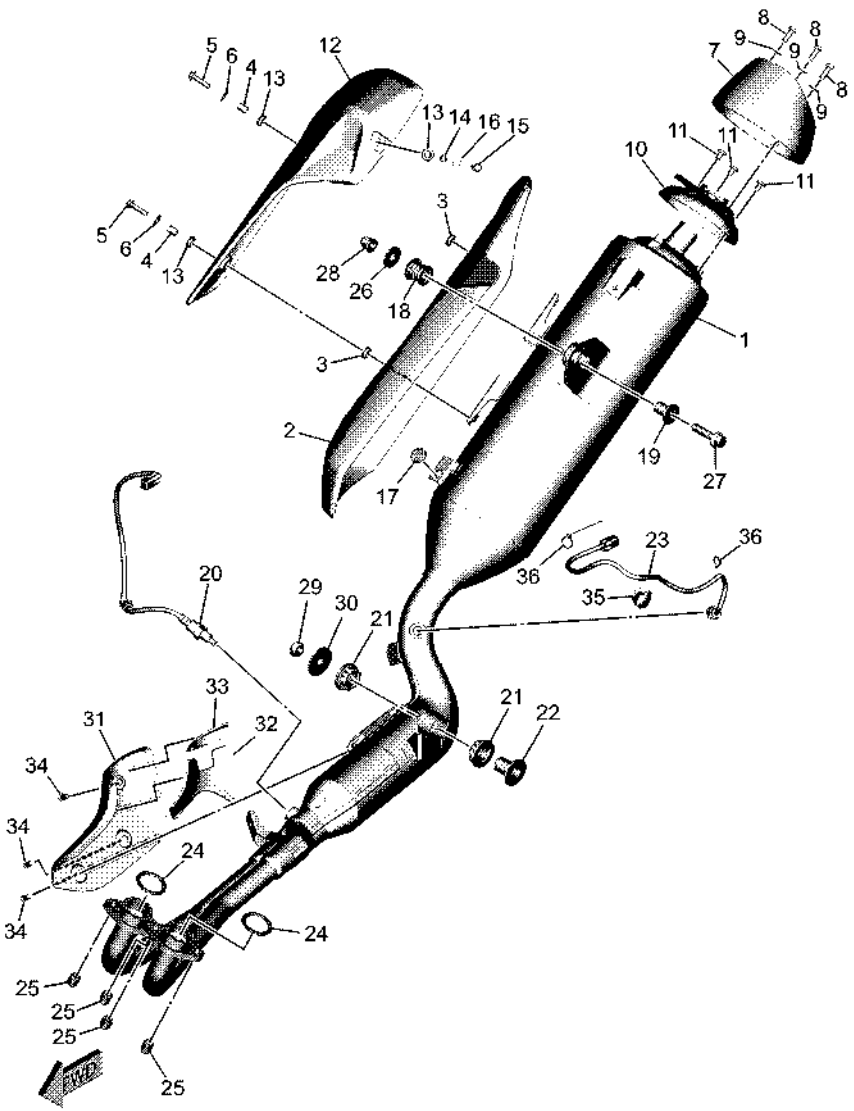

BSV1300D0120

FIG. 12 EXHAUST

REF. NO.	PART NO.	DESCRIPTION	BYF1					REMARKS
28	90176–10075	NUT, CAP	1					
29	90185–10022	NUT, SELF-LOCKING	1					
30	90201–10071	WASHER, PLATE	1					
31	BSW–14738–00	PROTECTOR, MUFFLER 3	1					
32	B7M–1475P–00	SEAT	1					
33	B7M–1476P–00	SEAT	1					
34	90111–06202	BOLT, HEXAGON SOCKET BUTTON	3					
35	90464–16003	CLAMP	1					
36	90465–10098	CLAMP	2					

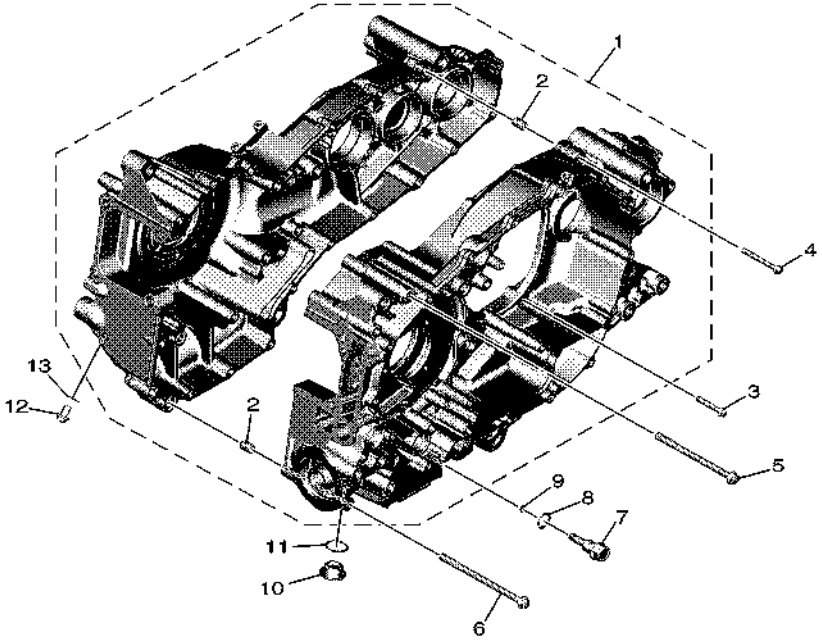

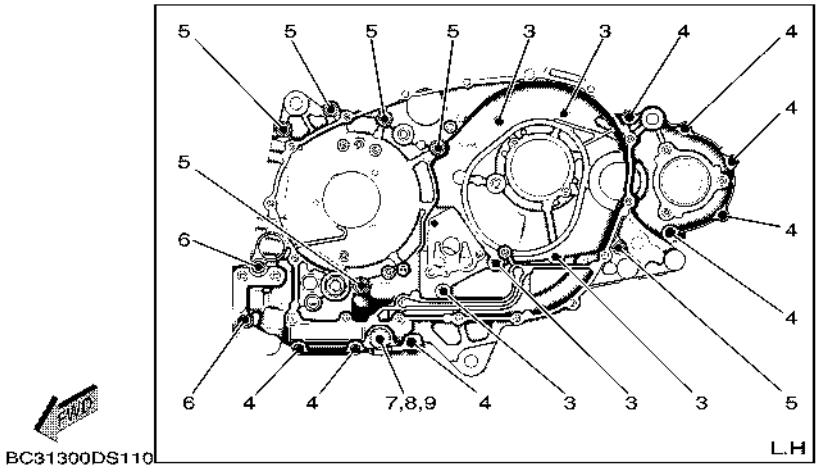

FIG. 13 CRANKCASE

REF. NO.	PART NO.	DESCRIPTION	BYF1					REMARKS
1	B7M–15100–08	CRANKCASE ASSY	1					
2	99530–10114	.PIN, DOWEL	2					
3	95E32–06035	BOLT, FLANGE DEEP RECESS	5					
4	95E32–06050	BOLT, FLANGE DEEP RECESS	8					
5	95022–08110	BOLT, FLANGE	6					
6	95022–08120	BOLT, FLANGE	2					
7	15B–15481–00	BOLT 1	1					
8	214–11198–01	GASKET	1					
9	93210–48364	O-RING	1					
10	BBW–15189–00	PLUG	1					
11	93210–22382	O-RING	1					
12	BBW–13455–00	PLUG	1					
13	90430–08119	GASKET	1					

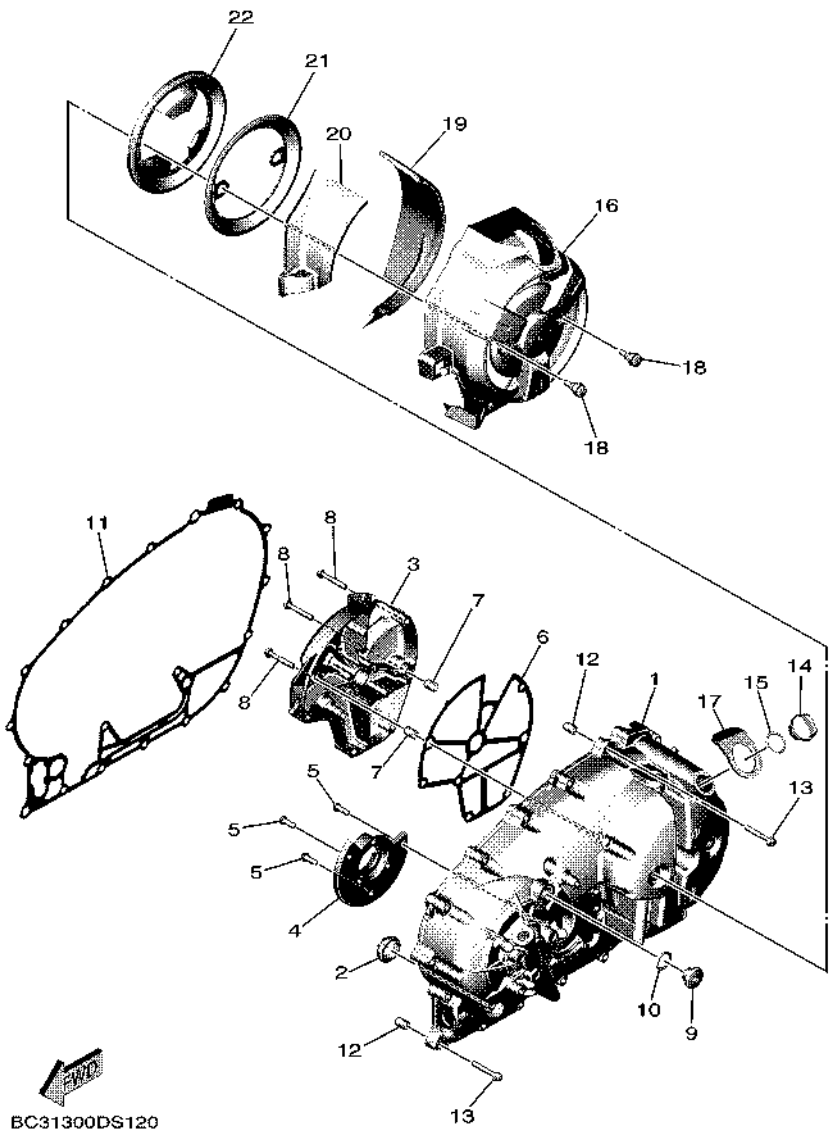

FIG. 14 CRANKCASE COVER 1

REF. NO.	PART NO.	DESCRIPTION	BYF1					REMARKS
1	BBW–15411–00	COVER, CRANKCASE 1	1					
2	2H7–15361–00	GAUGE, LEVEL	1					
3	59C–15414–00	COVER 1	1					
4	BBW–15417–00	COVER, CAP	1					
5	90149–06082	SCREW	3					
6	5GJ–15453–01	GASKET	1					
7	99530–10114	PIN, DOWEL	2					
8	95E32–06035	BOLT, FLANGE DEEP RECESS	7					
9	36Y–15189–01	PLUG	1					
10	93210–16325	O-RING	1					
11	B7M–15451–00	GASKET, CRANKCASE COVER 1	1					
12	99530–10114	PIN, DOWEL	2					
13	95E32–06035	BOLT, FLANGE DEEP RECESS	19					
14	5GJ–15363–10	PLUG, OIL	1					
15	93210–19123	O-RING	1					
16	BC3–15415–01	COVER, 1	1					
17	5GJ–15486–00	GROMMET	1					
18	2PW–15481–01	BOLT 1	2					
19	BC3–15316–00	DAMPER 1	1					
20	BC3–15335–00	DAMPER 3	1					
21	BC3–15499–00	PROTECTOR, COVER	1					
22	BC3–15789–00	DAMPER	1					

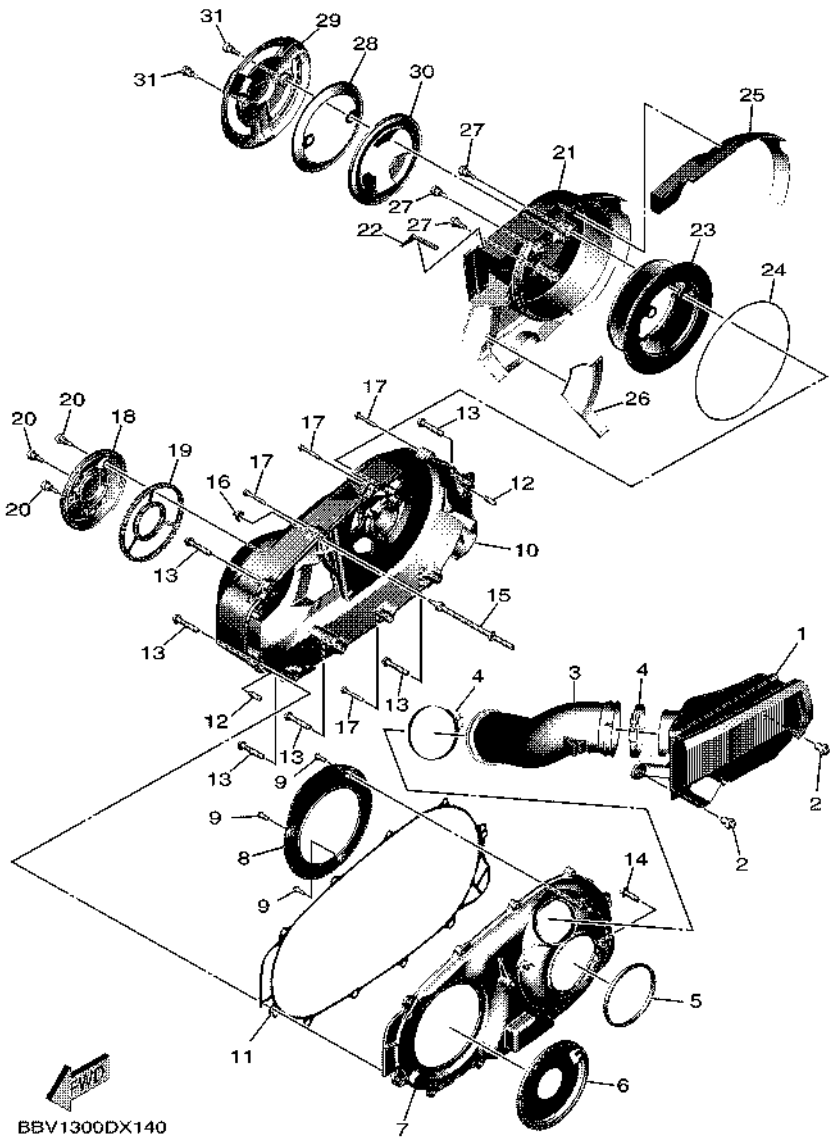

FIG. 15 CRANKCASE COVER 2

REF. NO.	PART NO.	DESCRIPTION	BYF1					REMARKS
1	BBW–15407–00	ELEMENT 1	1					
2	90269–08002	RIVET	2					
3	BBW–15473–00	DUCT, AIR	1					
4	90450–74001	HOSE CLAMP ASSY	2					
5	5GJ–15474–00	SEAL, AIR DUCT	1					
6	15B–15191–01	PLATE	1					
7	59C–15431–00	COVER, CRANKCASE 3	1					
8	5GJ–15113–01	PLATE	1					
9	92012–06014	BOLT, BUTTON HEAD	3					
10	59C–15421–10	COVER, CRANKCASE 2	1					
11	59C–15461–01	GASKET, CRANKCASE COVER 2	1					
12	99480–08020	PIN	2					
13	95E32–08040	BOLT, FLANGE DEEP RECESS	6					
14	95E32–08025	BOLT, FLANGE DEEP RECESS	1					
15	59C–15768–00	BOLT	1					
16	90176–06017	NUT, CAP	1					
17	95E32–06035	BOLT, FLANGE DEEP RECESS	4					
18	4B5–15492–00	COVER	1					
19	5GJ–1542A–00	DAMPER 1	1					
20	2PW–15481–01	BOLT 1	3					
21	BC3–15423–01	COVER 2	1					
22	90520–04016	DAMPER, PLATE	1					
23	59C–15408–00	ELEMENT 2	1					
24	48U–14452–00	SEAL	1					
25	59C–15326–11	DAMPER 2	1					
26	BC3–1542B–00	DAMPER 2	1					
27	2PW–15481–01	BOLT 1	3					

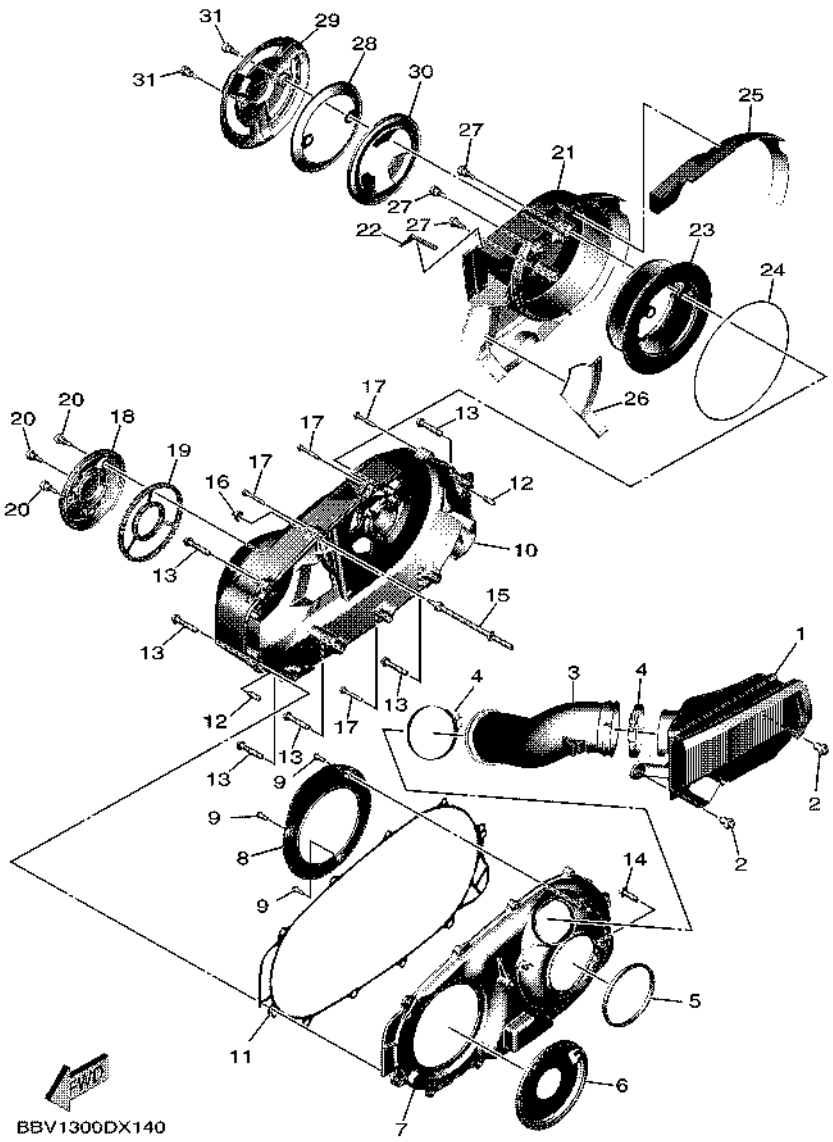

FIG. 15 CRANKCASE COVER 2

REF. NO.	PART NO.	DESCRIPTION	BYF1					REMARKS
28	BC3–15499–00	PROTECTOR, COVER	1					
29	BC3–1543A–01	COVER, ELEMENT	1					
30	BC3–15789–00	DAMPER	1					
31	2PW–15481–01	BOLT 1	2					

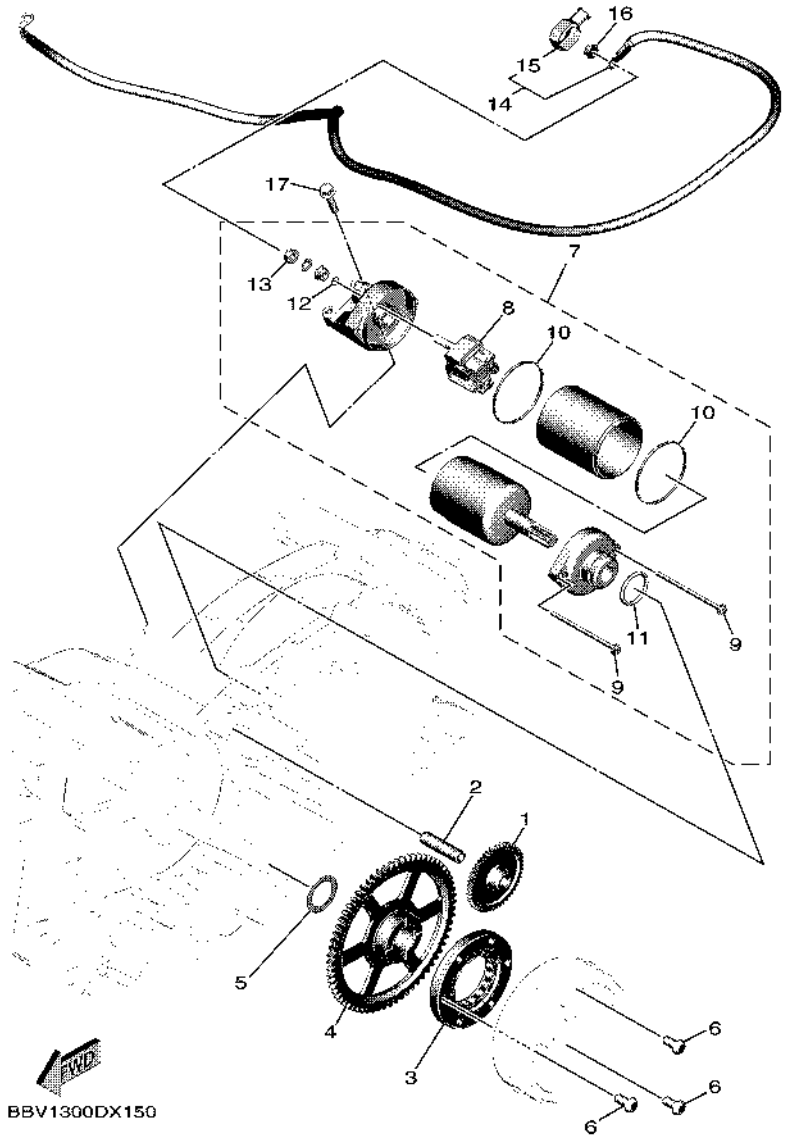

FIG. 16 STARTER

REF. NO.	PART NO.	DESCRIPTION	BYF1					REMARKS
1	B7M–15512–00	GEAR, IDLER 1	1					
2	36Y–15521–01	SHAFT 1	1					
3	1WS–15590–00	STARTER ONE-WAY ASSY	1					
4	BBW–15517–00	GEAR, IDLER 2	1					
5	90201–25290	WASHER, PLATE	1					
6	90149–08030	SCREW	3					
7	BC3–81890–00	MOTOR ASSY	1					
8	4B5–81840–00	.BRUSH HOLDER ASSY	1					
9	4B5–81826–00	.BOLT	2					
10	4B5–81844–00	.GASKET	2					
11	1FK–81847–00	.O-RING	1					
12	3TB–81847–00	.O-RING	1					
13	4XV–8182A–00	.NUT	1					
14	BBW–81815–00	CORD, STARTER MOTOR	1					
15	4B5–81871–00	.CAP	1					
16	4XV–8182A–00	NUT	1					
17	95D32–06025	BOLT, FLANGE DEEP RECESS	2					

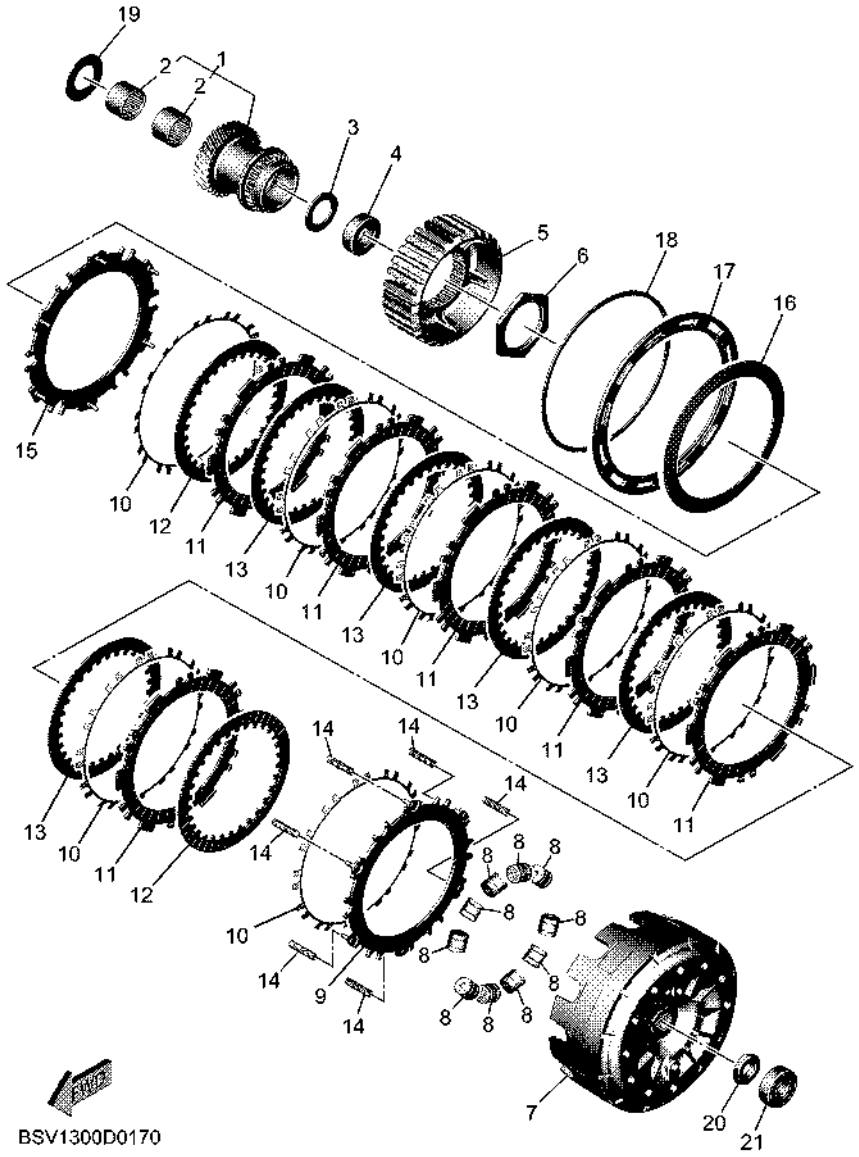

FIG. 17 CLUTCH

REF. NO.	PART NO.	DESCRIPTION	BYF1					REMARKS
1	B7M–16110–00	PRIMARY DRIVE GEAR ASSY	1					
2	93317–32493	.BEARING	2					
3	90201–244A9	WASHER, PLATE (2.05T)	1					
4	90387–20018	COLLAR	1					
5	B7M–16371–00	BOSS, CLUTCH	1					
6	90170–48003	NUT	1					
7	B7M–16511–00	HOUSING, CLUTCH	1					
8	5GJ–16540–00	ROLLER WEIGHT ASSY	10					
9	5GJ–16520–00	PLATE, THRUST WEIGHT	1					
10	5GJ–16533–00	SPRING, CLUTCH	7					
11	BSW–16321–00	PLATE, FRICTION	6					
12	B7M–16325–00	PLATE, CLUTCH 2	2					
13	B7M–16324–00	PLATE, CLUTCH 1	5					
14	BSW–16173–00	SPRING, COMPRESSION	6					
15	5GJ–16550–00	PRESSURE PLATE ASSY	1					
16	5GJ–16334–00	SPRING, CLUTCH 2	1					
17	5GJ–16537–00	PLATE, SPRING STOPPER	1					UR (HOLE 0)
	5GJ–16537–10	PLATE, SPRING STOPPER	1					UR (HOLE 1)
	5GJ–16537–20	PLATE, SPRING STOPPER	1					UR (HOLE 2)
	5GJ–16537–30	PLATE, SPRING STOPPER	1					UR (HOLE 3)
18	5GJ–16529–00	CLIP	1					
19	90201–24017	WASHER, PLATE	1					
20	90170–16326	NUT	1					
21	93306–30102	BEARING	1					

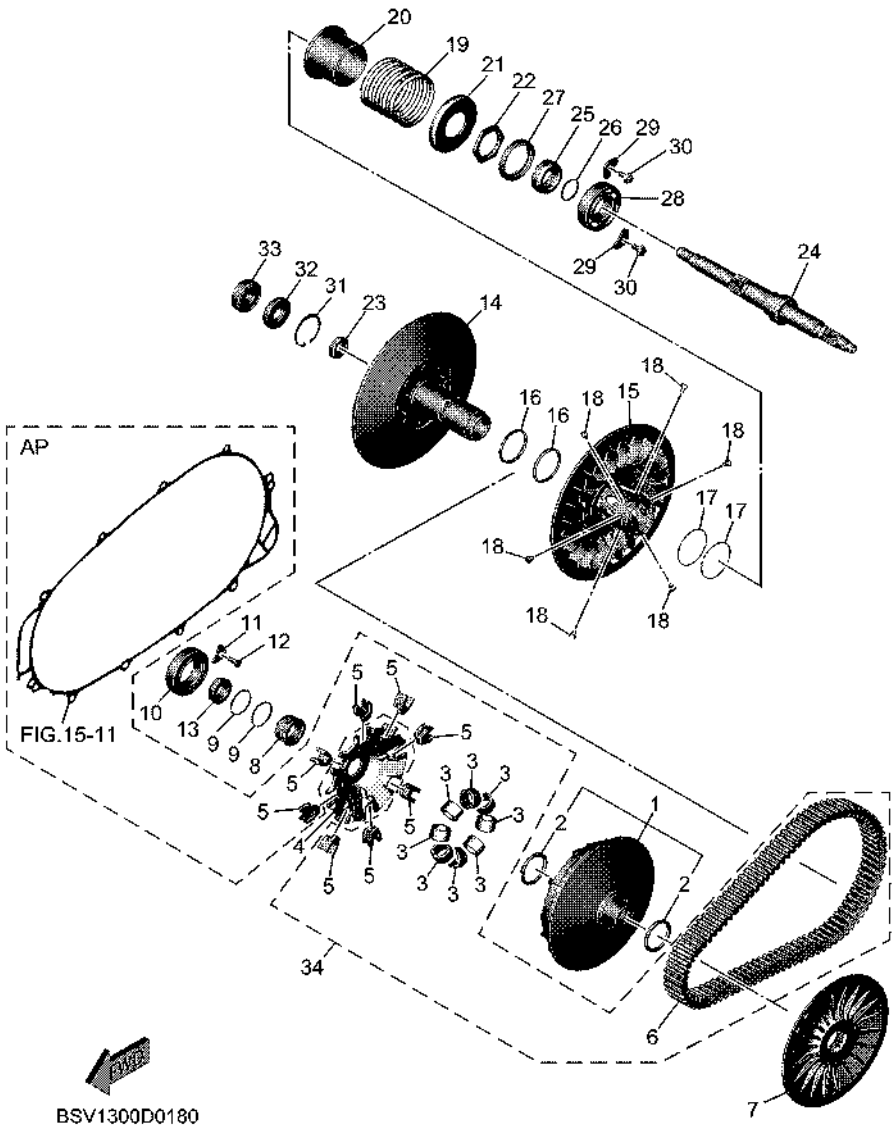

FIG. 18 CLUTCH 2

REF. NO.	PART NO.	DESCRIPTION	BYF1					REMARKS
1	B7M–17601–09	PRIMARY SHEAVE ASSY	1					
2	93101–35001	.OIL SEAL	2					
3	5VU–17632–10	WEIGHT	8					
4	BC3–17623–00	CAM	1					
5	59C–17653–01	SLIDER	8					
6	B7M–17641–10	V-BELT	1					
7	59C–17611–00	SHEAVE, PRIMARY FIXED	1					
8	59C–17649–01	SPACER	1					
9	93210–30611	O-RING	2					
10	93306–00713	BEARING	1					
11	4XM–15383–00	PLATE, BEARING COVER	1					
12	90151–06023	SCREW, COUNTERSUNK	1					
13	90179–20013	NUT	1					
14	59C–17660–00	SECONDARY FIXED SHEAVE COMP.	1					
15	59C–17670–00	SECONDARY SLIDING SHEAVE	1					
16	93104–41119	OIL SEAL	2					
17	93210–44545	O-RING	2					
18	4CW–17664–00	PIN, GUIDE	6					
19	90501–620A1	SPRING, COMPRESSION	1					
20	5GJ–17690–00	SPRING SEAT COMP.	1					
21	4WV–17644–00	SEAT,SPRING	1					
22	90170–36279	NUT	1					
23	90170–18221	NUT	1					
24	B7M–17681–00	SHAFT, SECONDARY	1					
25	90387–26001	COLLAR	1					
26	93210–26001	O-RING	1					
27	93102–42004	OIL SEAL	1					

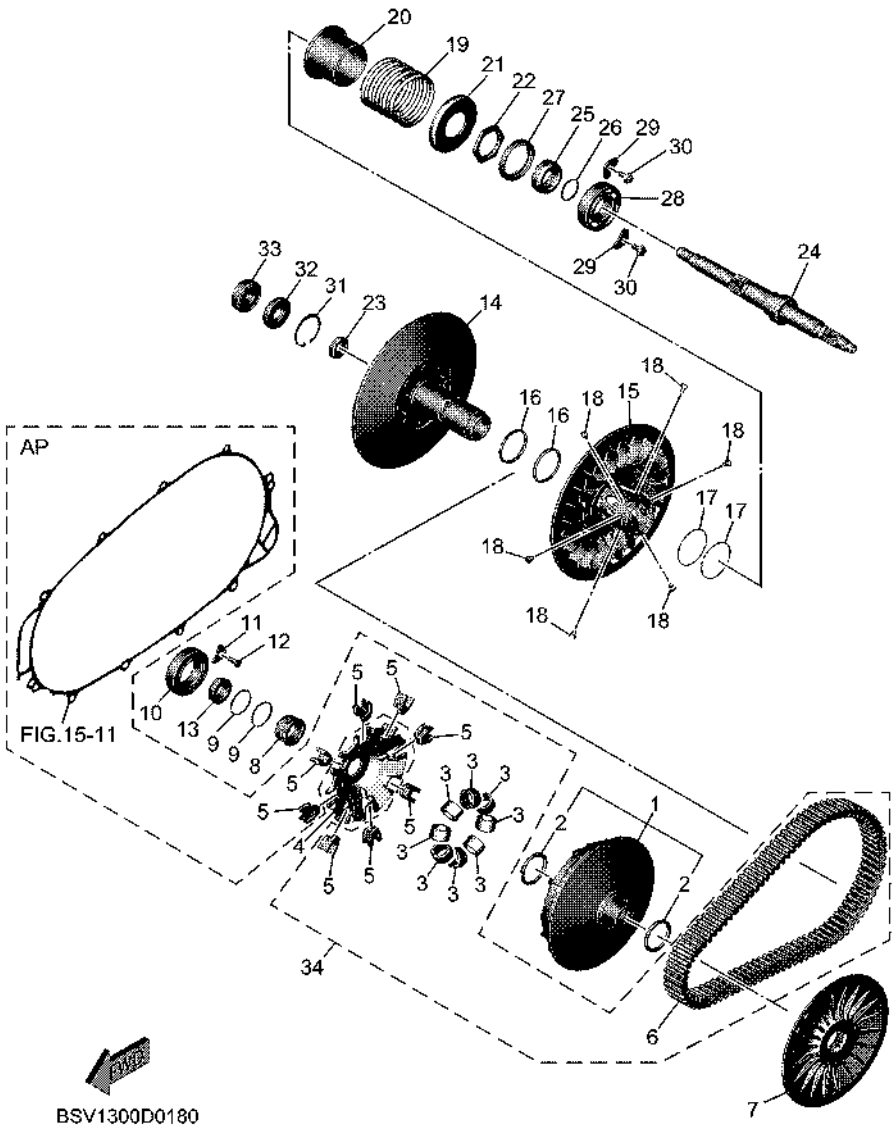

FIG. 18 CLUTCH 2

REF. NO.	PART NO.	DESCRIPTION	BYF1					REMARKS
28	93306–20651	BEARING	1					
29	5GJ–15383–00	PLATE, BEARING COVER	2					
30	90110–06036	BOLT, HEXAGON SOCKET HEAD	2					
31	99009–42500	CIRCLIP	1					
32	93102–15004	OIL SEAL	1					
33	93306–30217	BEARING	1					
34	BBV–W000V–00	V-BELT KIT	1					AP

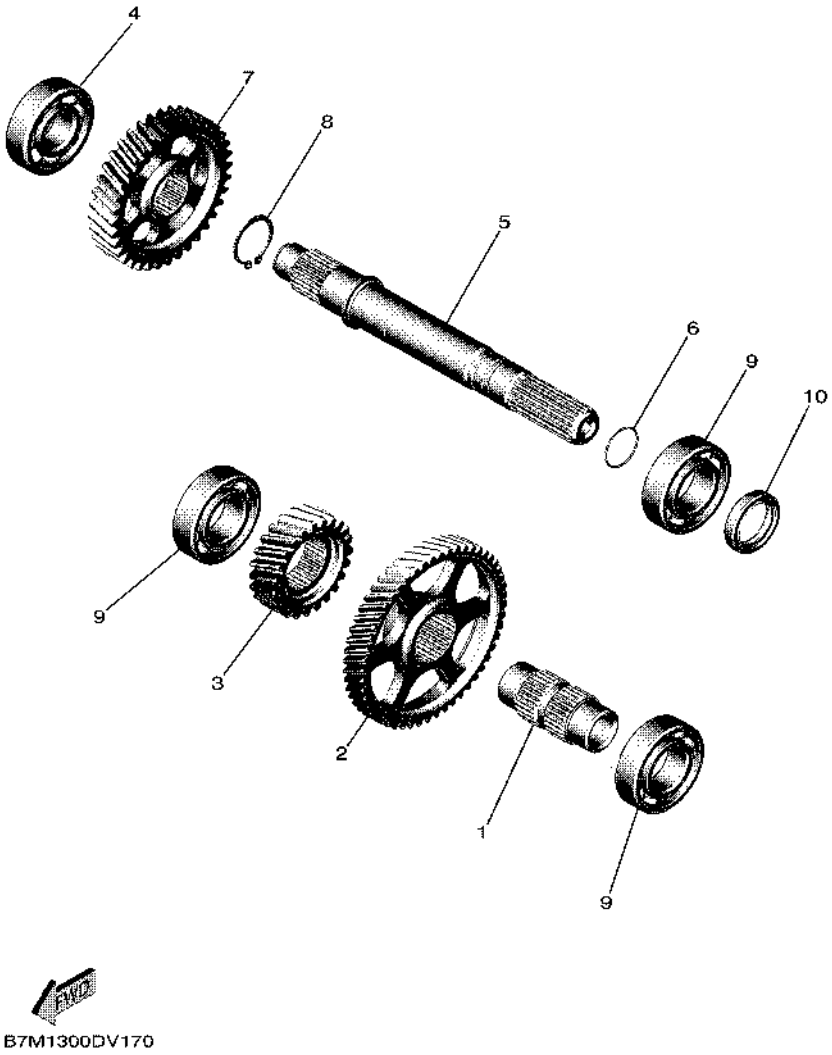

FIG. 19 TRANSMISSION

REF. NO.	PART NO.	DESCRIPTION	BYF1					REMARKS
1	59C–17411–10	AXLE, MAIN	1					
2	59C–16151–00	GEAR, PRIMARY DRIVEN (52T)	1					
3	BBW–17111–00	GEAR,1ST PINION (23T)	1					
4	93306–30427	BEARING	1					
5	B7M–17421–00	AXLE, DRIVE	1					
6	93210–21006	O-RING	1					
7	BBW–17211–00	GEAR, 1ST WHEEL (36T)	1					
8	99009–25400	CIRCLIP	1					
9	93306–205A8	BEARING	3					
10	93102–25064	OIL SEAL	1					

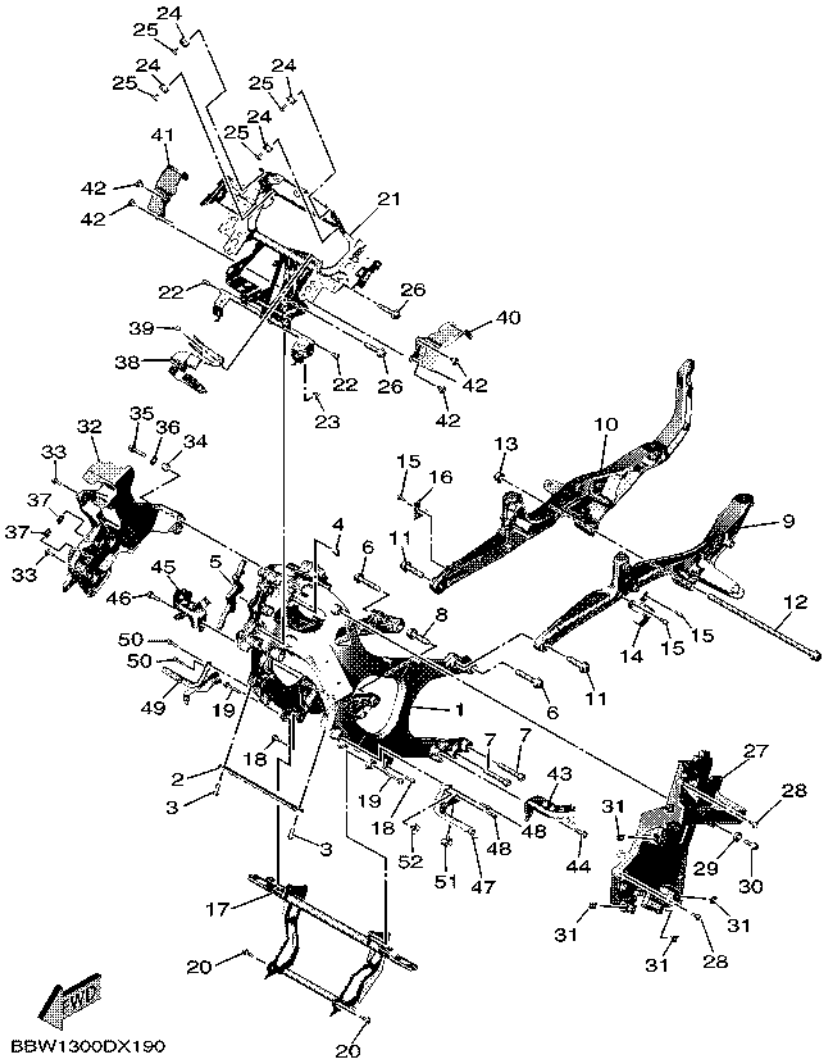

FIG. 20 FRAME

REF. NO.	PART NO.	DESCRIPTION	BYF1					REMARKS
1	B7M–21110–00	FRAME COMP.	1					
2	BC3–21236–00	REINFORCEMENT	1					
3	90149–08002	SCREW	2					
4	5VX–21279–10	PLUG, BLIND	1					
5	BBW–2113B–00	DAMPER	1					
6	BC3–21481–10	BOLT, ENGINE MOUNTING 1	2					
7	91312–10060	BOLT, HEXAGON SOCKET HEAD	2					
8	95812–12045	BOLT, FLANGE	1					
9	BBW–21195–00	SEAT, RAIL 1	1					
10	BBW–21185–01	SEAT, RAIL 2	1					
11	95812–12045	BOLT, FLANGE	2					
12	90105–12052	BOLT, FLANGE	1					
13	95602–12200	NUT, SELF-LOCKING	1					
14	BBW–21158–00	BRACKET	1					
15	95E32–06012	BOLT, FLANGE DEEP RECESS	3					
16	BBW–21183–00	PLATE	1					
17	BV1–2142K–00	BRACKET, RADIATOR	1					
18	95812–06016	BOLT, FLANGE	2					
19	95812–06040	BOLT, FLANGE	2					
20	95D32–06020	BOLT, FLANGE DEEP RECESS	2					
21	BSW–28356–00	STAY 1	1					
22	90338–08174	PLUG	2					
23	BBW–21399–00	CAP	1					
24	4XV–83513–00	DAMPER	4					
25	90164–05001	SCREW, TAPPING	4					
26	95812–10045	BOLT, FLANGE	2					
27	BSW–8212B–00	BOX, BATTERY 1	1					

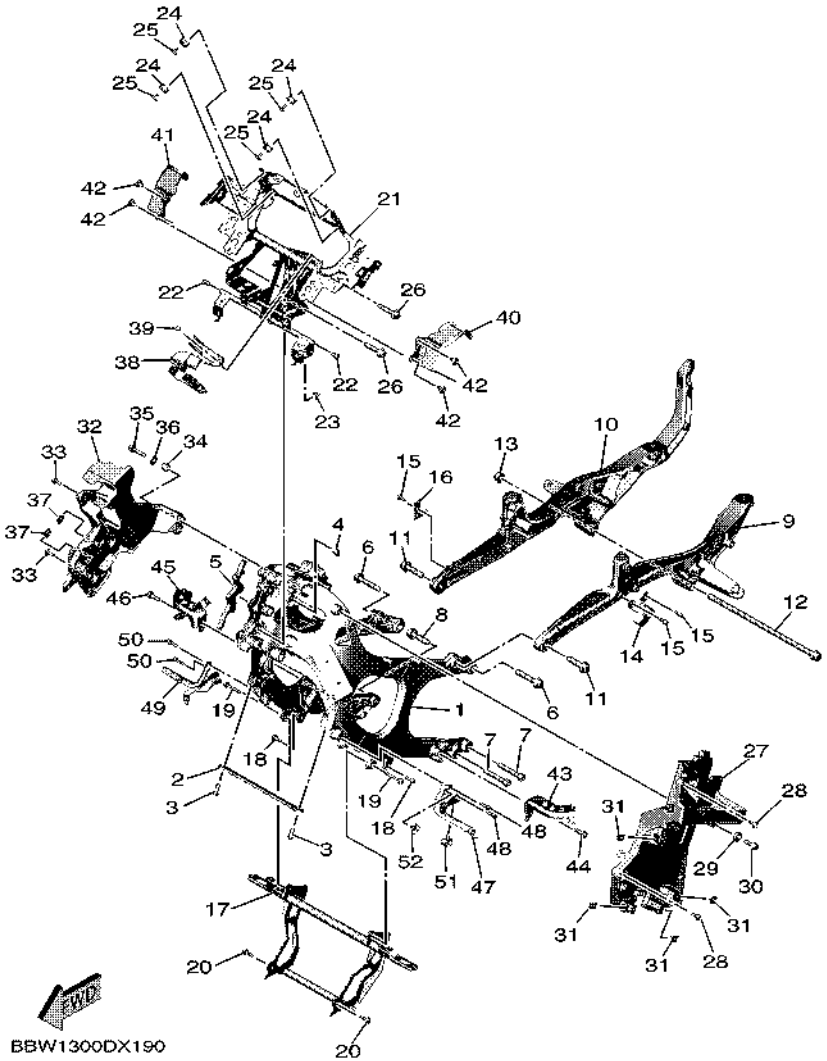

FIG. 20 FRAME

REF. NO.	PART NO.	DESCRIPTION	BYF1					REMARKS
28	95D37–06016	BOLT, FLANGE DEEP RECESS	2					
29	90387–10114	COLLAR	1					
30	90105–08129	BOLT, FLANGE	1					
31	90183–06069	NUT, SPRING	4					
32	BBW–8212C–00	BOX, BATTERY 2	1					
33	95D37–06016	BOLT, FLANGE DEEP RECESS	2					
34	90387–10100	COLLAR	1					
35	95D32–08035	BOLT, FLANGE DEEP RECESS	1					
36	90201–087F0	WASHER, PLATE	1					
37	90183–06069	NUT, SPRING	2					
38	BSW–2116M–00	BRACKET 10	1					
39	90269–06008	RIVET	1					
40	BC3–2117F–01	COVER	1					
41	BC3–2117M–01	COVER 2	1					
42	90269–07077	RIVET	4					
43	BV1–2141A–00	BRACKET 1	1					
44	90105–08M35	BOLT, FLANGE	1					
45	BBW–2141E–00	BRACKET 2	1					
46	90105–08M35	BOLT, FLANGE	1					
47	BC3–2144H–00	BRACKET, FOOTREST 3	1					
48	90105–06127	BOLT, FLANGE	2					
49	BC3–2145H–00	BRACKET, FOOTREST 4	1					
50	90105–06127	BOLT, FLANGE	2					
51	90464–09130	CLAMP	1					
52	90464–08126	CLAMP	1					

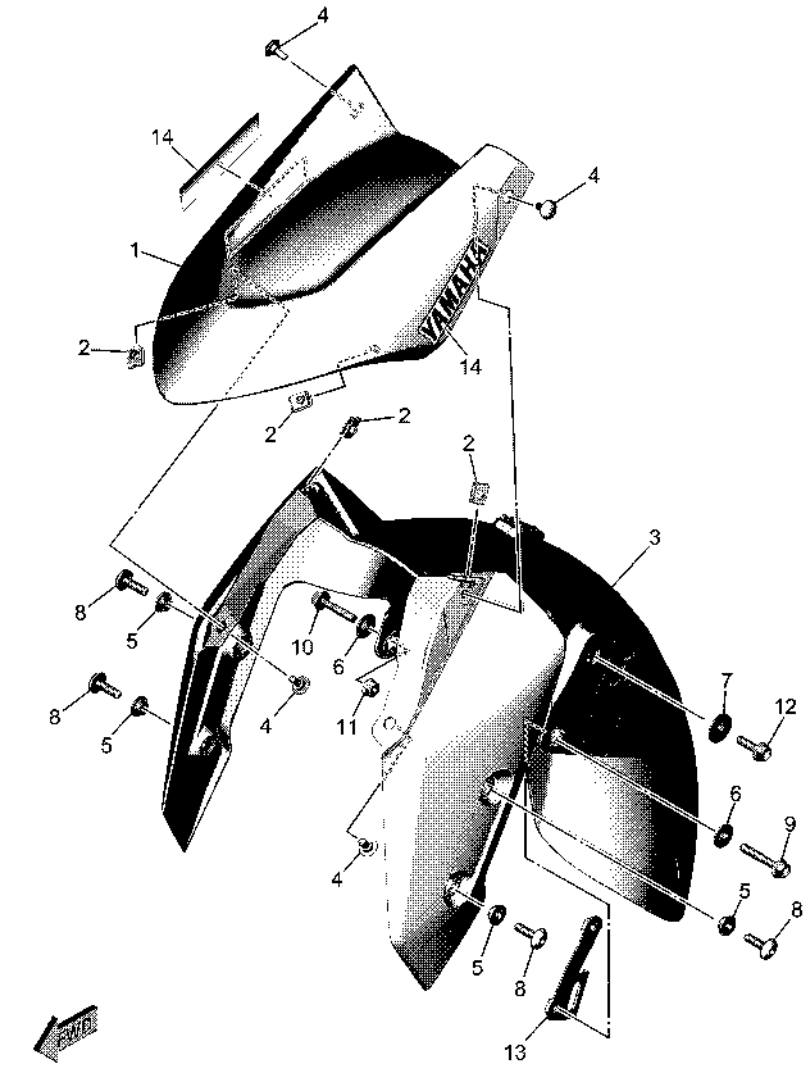

FIG. 21 FENDER

REF. NO.	PART NO.	DESCRIPTION	BYF1					REMARKS
1	BBW–21511–00–P8	FENDER, FRONT	1					UR FOR BNC2
	BBW–21511–00–P6	FENDER, FRONT	1					UR FOR MDRNP1
2	90183–05076	NUT, SPRING	4					
3	BBW–21556–00	FENDER, FRONT 2	1					
4	90111–05045	BOLT, HEXAGON SOCKET BUTTON	4					
5	90387–06107	COLLAR	4					
6	90387–06200	COLLAR	2					
7	90387–06364	COLLAR	1					
8	90111–06140	BOLT, HEXAGON SOCKET BUTTON	4					
9	95D32–06035	BOLT, FLANGE DEEP RECESS	1					
10	95D32–06030	BOLT, FLANGE DEEP RECESS	1					
11	95702–06500	NUT, FLANGE	1					
12	95D32–06020	BOLT, FLANGE DEEP RECESS	1					
13	BBW–2612K–00	BRKT 2	1					
14	3WF–2153E–41	EMBLEM, YAMAHA	2					UR FOR BNC2
	4B5–2153E–01	EMBLEM, YAMAHA	2					UR FOR MDRNP1

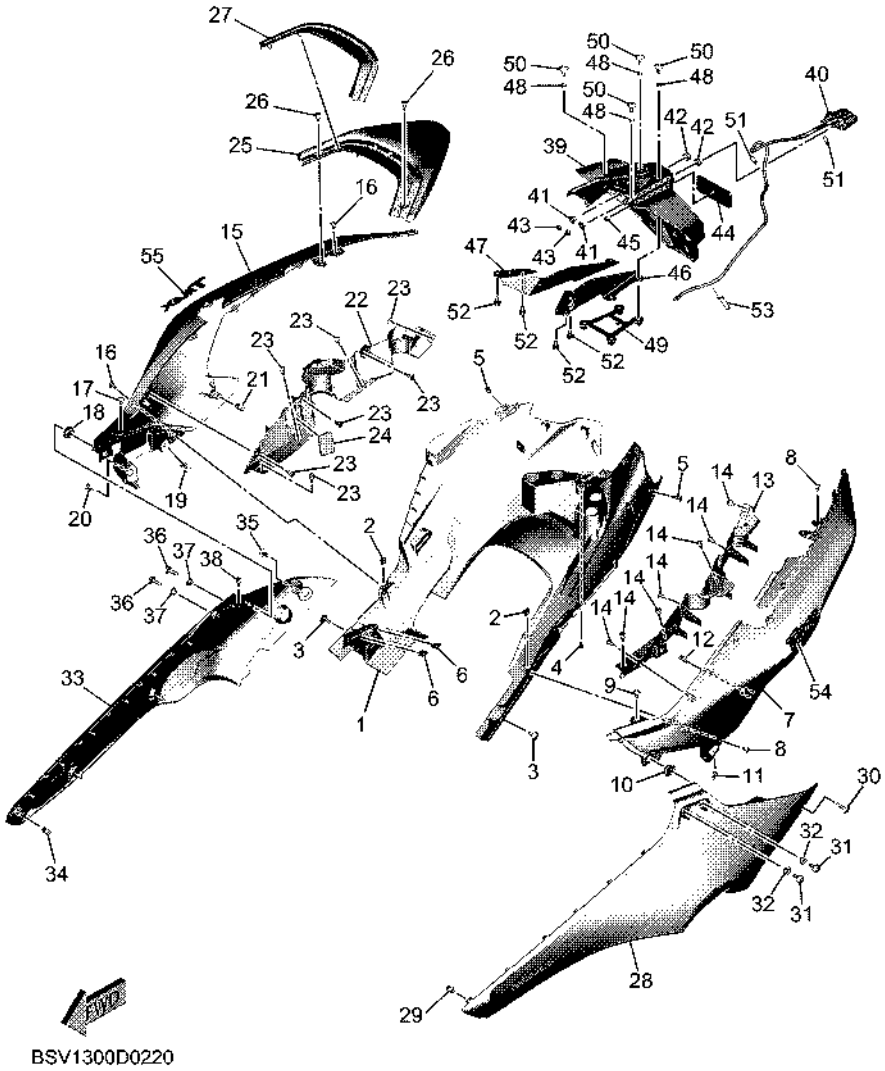

FIG. 22 SIDE COVER

REF. NO.	PART NO.	DESCRIPTION	BYF1					REMARKS
1	BBW–2171E–00	COVER, SIDE 5	1					
2	90183–05042	NUT, SPRING	2					
3	90111–06191	BOLT, HEXAGON SOCKET BUTTON	2					
4	97702–50012	SCREW, TAPPING	1					
5	90269–06008	RIVET	2					
6	90183–060A6	NUT, SPRING	2					
7	BBW–21711–00–P8	COVER, SIDE 1	1					UR FOR BNC2
	BBW–21711–00–P6	COVER, SIDE 1	1					UR FOR MDRNP1
8	97702–50012	SCREW, TAPPING	2					
9	90109–05022	BOLT	1					
10	90480–01559	GROMMET	1					
11	90183–060A6	NUT, SPRING	1					
12	90464–07018	CLAMP	1					
13	BBW–2172G–01	PANEL 3	1					
14	90269–06008	RIVET	7					
15	BBW–21721–00–P8	COVER, SIDE 2	1					UR FOR BNC2
	BBW–21721–00–P6	COVER, SIDE 2	1					UR FOR MDRNP1
16	97702–50012	SCREW, TAPPING	2					
17	90109–05022	BOLT	1					
18	90480–01559	GROMMET	1					
19	90183–060A6	NUT, SPRING	1					
20	90269–06008	RIVET	1					
21	90464–07018	CLAMP	1					
22	BBW–2172H–01	PANEL 4	1					
23	90269–06008	RIVET	7					
24	90338–36004	PLUG	1					
25	BBW–2171A–00–P8	COVER, TOP	1					UR FOR BNC2

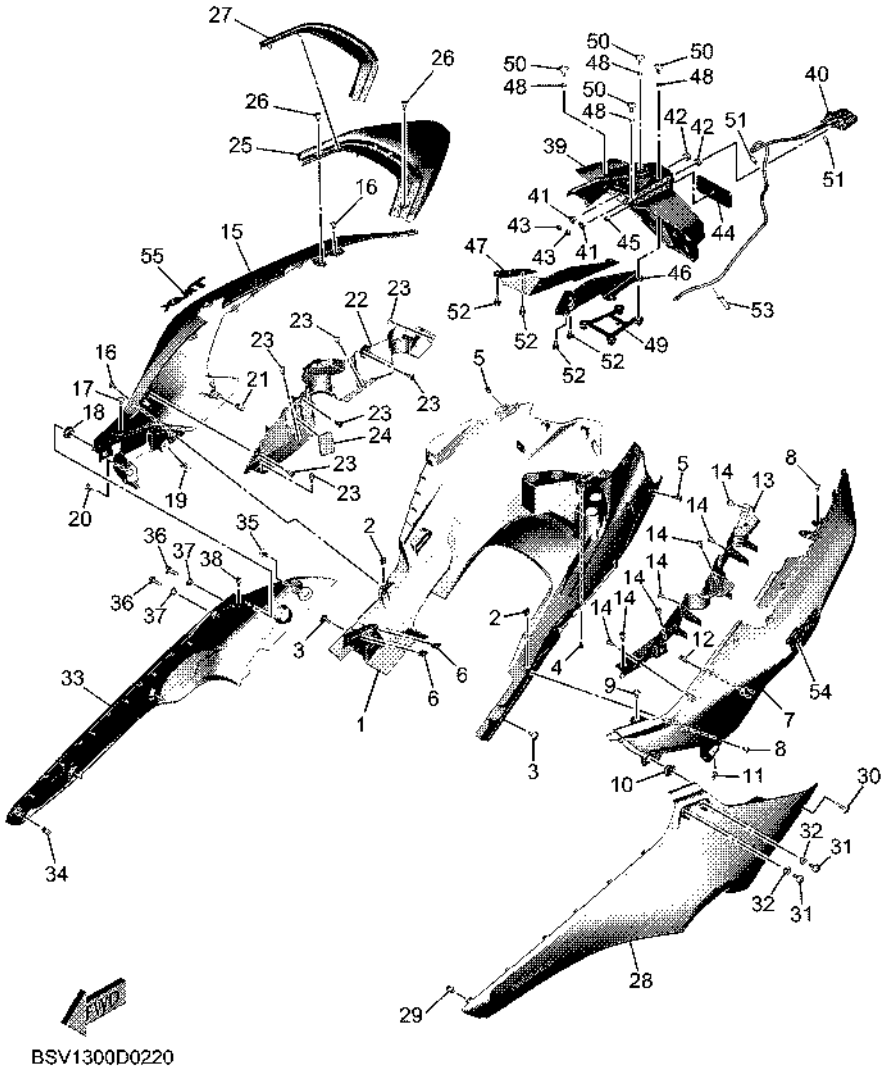

FIG. 22 SIDE COVER

REF. NO.	PART NO.	DESCRIPTION	BYF1					REMARKS
25	BBW–2171A–00–P6	COVER, TOP	1					UR FOR MDRNP1
26	90269–06008	RIVET	2					
27	BBW–2175N–00	COVER, FLANGE	1					
28	BBW–21731–00–P0	COVER, SIDE 3	1					UR MBL2 FOR BNC2
	BBW–21731–00–P2	COVER, SIDE 3	1					UR SMX FOR MDRNP1
29	90464–07018	CLAMP	1					
30	90149–06104	SCREW	1					
31	90149–06104	SCREW	2					
32	90387–06270	COLLAR	2					
33	BBW–21741–00–P0	COVER, SIDE 4	1					UR MBL2 FOR BNC2
	BBW–21741–00–P2	COVER, SIDE 4	1					UR SMX FOR MDRNP1
34	90464–07018	CLAMP	1					
35	90149–06104	SCREW	1					
36	90149–06104	SCREW	2					
37	90387–06270	COLLAR	2					
38	90269–06008	RIVET	1					
39	BBW–21629–00	GUARD, MUD	1					
40	BBW–H4740–00	LICENSE LIGHT ASSY	1					
41	90387–05003	COLLAR	2					
42	90480–11009	GROMMET	2					
43	95607–05200	NUT, S/L FLANGE	2					
44	3Y6–85130–02	REAR REFLECTOR ASSY	1					
45	95607–05200	NUT, S/L FLANGE	1					
46	BBW–2164F–00	STAY 1	1					
47	BBW–2164G–00	STAY 2	1					
48	90387–06372	COLLAR	4					
49	BBW–2161G–00	BRACKET 6	1					

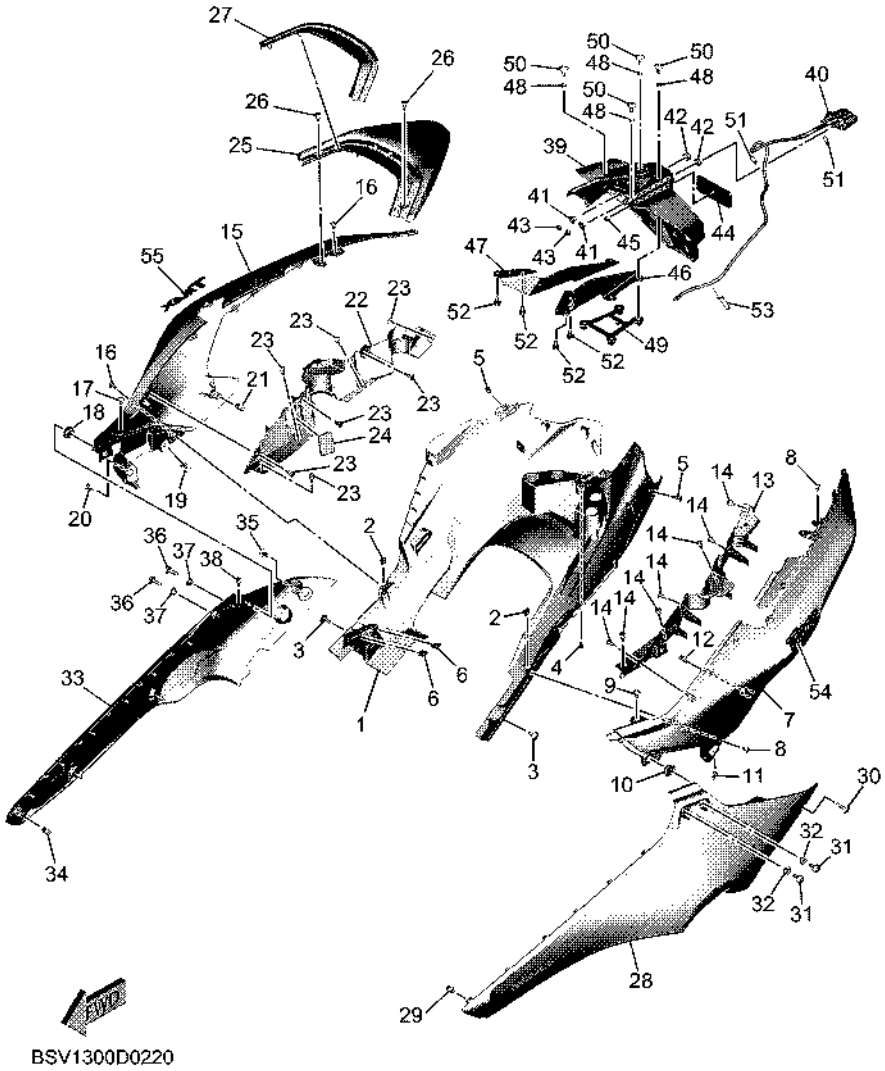

FIG. 22 SIDE COVER

REF. NO.	PART NO.	DESCRIPTION	BYF1					REMARKS
50	90111–06089	BOLT, HEXAGON SOCKET BUTTON	4					
51	90465–10098	CLAMP	2					
52	95812–06012	BOLT, FLANGE	4					
53	90465–10098	CLAMP	1					
54	BBW–2173B–30	EMBLEM 3D	1					
55	BBW–2173B–30	EMBLEM 3D	1					

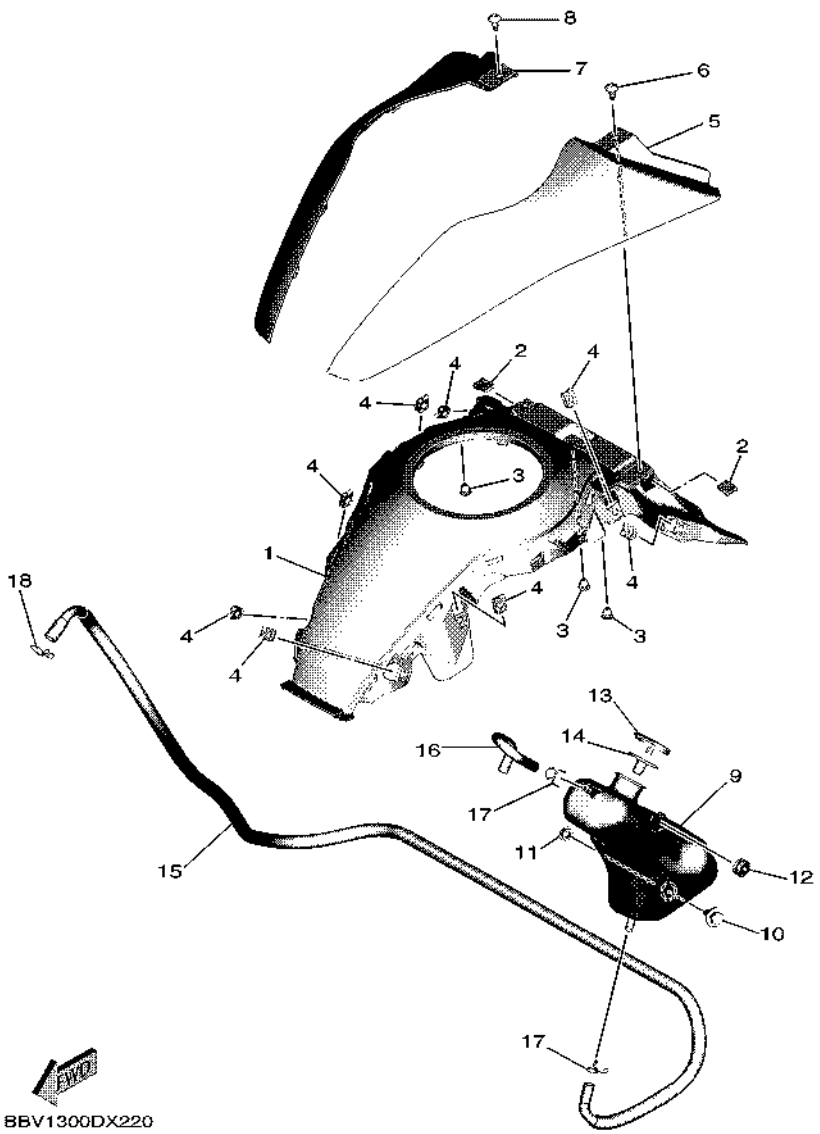

FIG. 23 SIDE COVER 2

REF. NO.	PART NO.	DESCRIPTION	BYF1					REMARKS
1	BBW–24765–00	LID, DOUBLE SEAT	1					
2	90183–05042	NUT, SPRING	2					
3	90338–06018	PLUG	3					
4	90183–05076	NUT, SPRING	8					
5	BBW–24129–00–P4	COVER, SIDE 1	1					UR MBL2 FOR BNC2
	BBW–24129–00–P2	COVER, SIDE 1	1					UR SMX FOR MDRNP1
6	90167–05079	SCREW, TAPPING	1					
7	BBW–24139–00–P4	COVER, SIDE 2	1					UR MBL2 FOR BNC2
	BBW–24139–00–P2	COVER, SIDE 2	1					UR SMX FOR MDRNP1
8	90167–05079	SCREW, TAPPING	1					
9	BBW–21871–00	TANK, RECOVERY	1					
10	90119–06209	BOLT, WITH WASHER	1					
11	90387–06173	COLLAR	1					
12	90480–10334	GROMMET	1					
13	1AA–21815–00	CAP	1					
14	1AA–21874–00	.GASKET	1					
15	BBW–21816–00	PIPE 1	1					
16	BC3–21817–00	PIPE 2	1					
17	90467–090A2	CLIP	2					
18	90467–10008	CLIP	1					

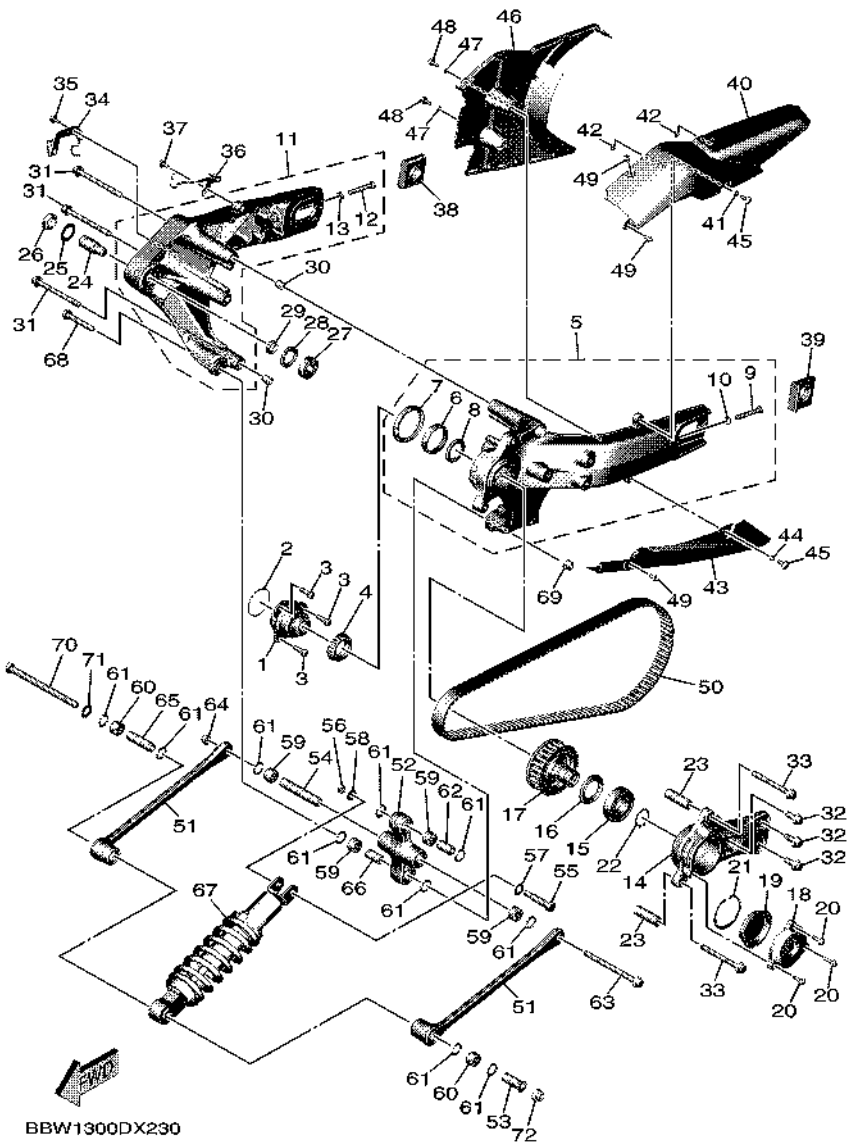

FIG. 24 REAR ARM & SUSPENSION

REF. NO.	PART NO.	DESCRIPTION	BYF1					REMARKS
1	15B–17524–00	HOLDER	1					
2	93210–50553	O-RING	1					
3	91312–08020	BOLT, HEXAGON SOCKET HEAD	3					
4	93332–00086	BEARING	1					
5	BC3–2210M–00	REAR ARM ASSY 1	1					
6	5GJ–17554–00	.RETAINER, BEARING	1					
7	93102–55004	.OIL SEAL	1					
8	93102–30284	.OIL SEAL	1					
9	90101–08013	.BOLT	1					
10	95302–08600	.NUT, HEXAGON	1					
11	BC3–2210N–01	REAR ARM ASSY 2	1					
12	90101–08013	.BOLT	1					
13	95302–08600	.NUT, HEXAGON	1					
14	BC3–22465–00	HOLDER	1					
15	93306–20662	BEARING	1					
16	93102–35023	OIL SEAL	1					
17	B7M–17651–00	PULLEY, BELT	1					
18	59C–2219X–00	COVER	1					
19	59C–2214F–00	DAMPER 1	1					
20	90110–06163	BOLT, HEXAGON SOCKET HEAD	3					
21	99009–62500	CIRCLIP	1					
22	99009–30400	CIRCLIP	1					
23	59C–46153–00	COLLAR, GUIDE	2					
24	15B–22141–00	SHAFT, PIVOT	1					
25	90201–22018	WASHER, PLATE	1					
26	1J7–22143–00	NUT	1					
27	93332–00010	BEARING	1					

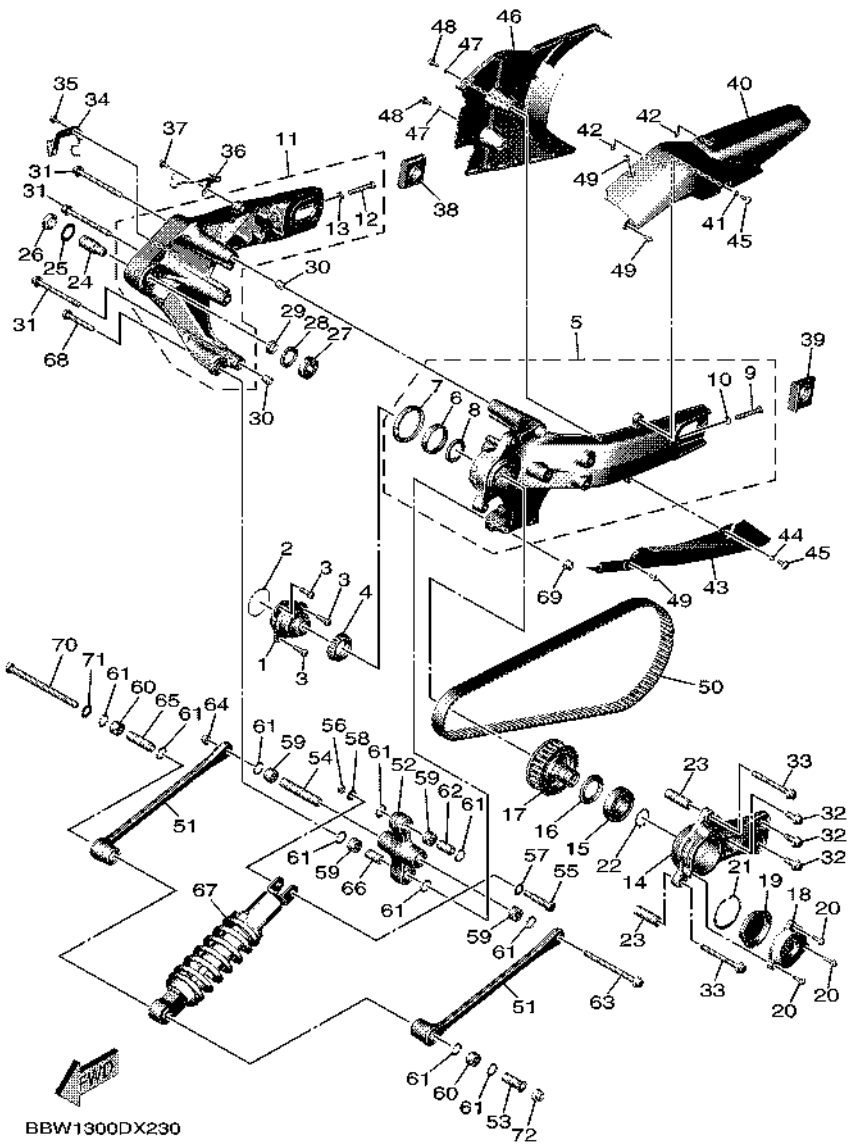

FIG. 24 REAR ARM & SUSPENSION

REF. NO.	PART NO.	DESCRIPTION	BYF1					REMARKS
28	93102–25017	OIL SEAL	1					
29	90387–17011	COLLAR	1					
30	99530–14016	PIN, DOWEL	2					
31	95D32–10100	BOLT, FLANGE DEEP RECESS	3					
32	95D32–10025	BOLT, FLANGE DEEP RECESS	3					
33	95D32–10090	BOLT, FLANGE DEEP RECESS	2					
34	BC3–21682–00	STAY, PLATE	1					
35	95D32–06012	BOLT, FLANGE DEEP RECESS	1					
36	BC3–2587A–00	HOLDER, BRAKE HOSE 4	1					
37	90105–06181	BOLT, FLANGE	1					
38	5VY–25388–00	PULLER, CHAIN 1	1					
39	5VY–25389–01	PULLER, CHAIN 2	1					
40	BC3–22311–01	CASE, CHAIN	1					
41	90387–06372	COLLAR	1					
42	90468–040A0	CLIP	2					
43	BC3–22312–01	CASE, CHAIN 2	1					
44	90387–06372	COLLAR	1					
45	90111–06116	BOLT, HEXAGON SOCKET BUTTON	2					
46	BC3–22381–01	COVER 1	1					
47	90387–06372	COLLAR	2					
48	95D32–06014	BOLT, FLANGE DEEP RECESS	2					
49	90269–06001	RIVET	3					
50	BC3–46241–01	BELT	1					
51	BC3–2217M–00	ARM 1	2					
52	BC3–2217A–00	ARM, RELAY	1					
53	BC3–2248B–00	COLLAR, ROD 1	1					
54	BC3–2248C–00	COLLAR, ROD 2	1					

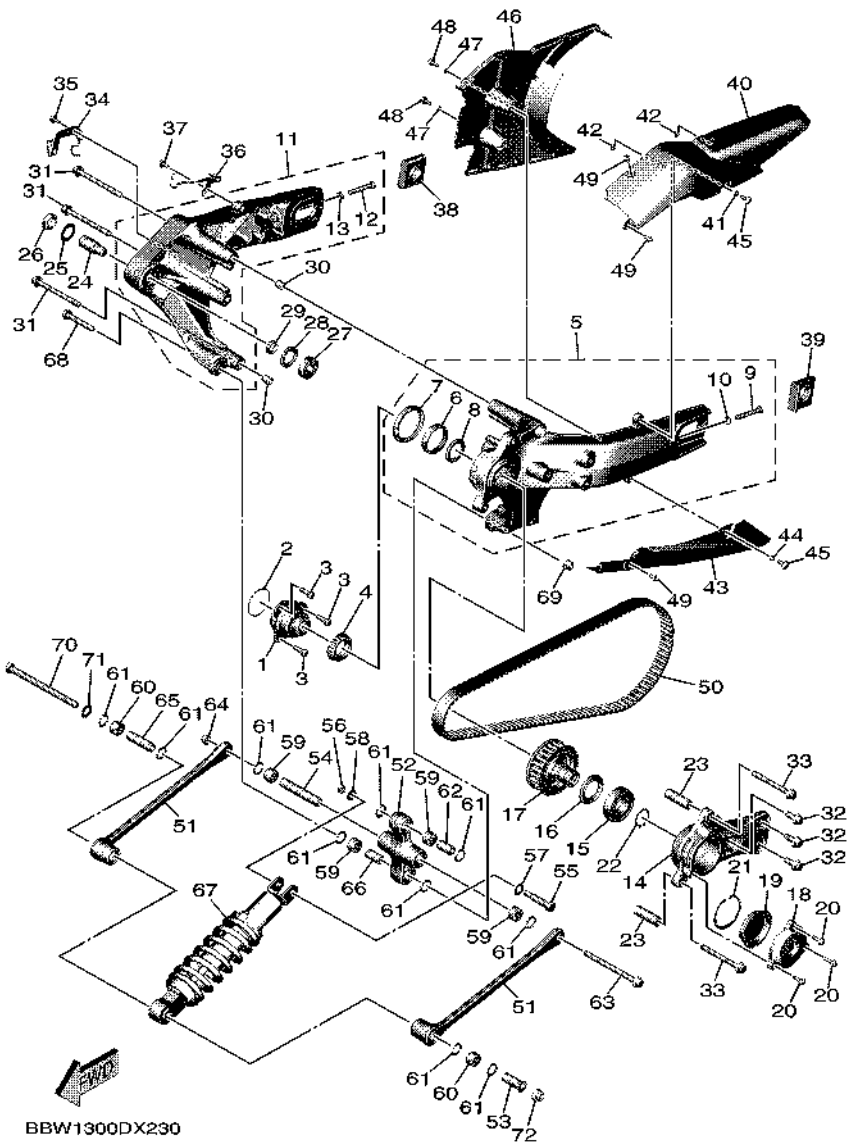

FIG. 24 REAR ARM & SUSPENSION

REF. NO.	PART NO.	DESCRIPTION	BYF1					REMARKS
55	90109–10027	BOLT	1					
56	95612–10100	NUT, U	1					
57	90201–13015	WASHER, PLATE	1					
58	90201–10035	WASHER, PLATE	1					
59	93315–31758	BEARING	4					
60	93315–41774	BEARING	2					
61	93109–17071	OIL SEAL	10					
62	90387–127W0	COLLAR	1					
63	90105–10220	BOLT, FLANGE	1					
64	95602–10200	NUT, SELF-LOCKING	1					
65	BC3–2248B–10	COLLAR, ROD 1	1					
66	BC3–22882–00	COLLAR, DISTANCE 1	1					
67	BBW–22210–00	SHOCK ABSORBER ASSY, REAR	1					
68	90105–10318	BOLT, FLANGE	1					
69	95602–10200	NUT, SELF-LOCKING	1					
70	90101–12060	BOLT	1					
71	90201–12034	WASHER, PLATE	1					
72	95602–12200	NUT, SELF-LOCKING	1					

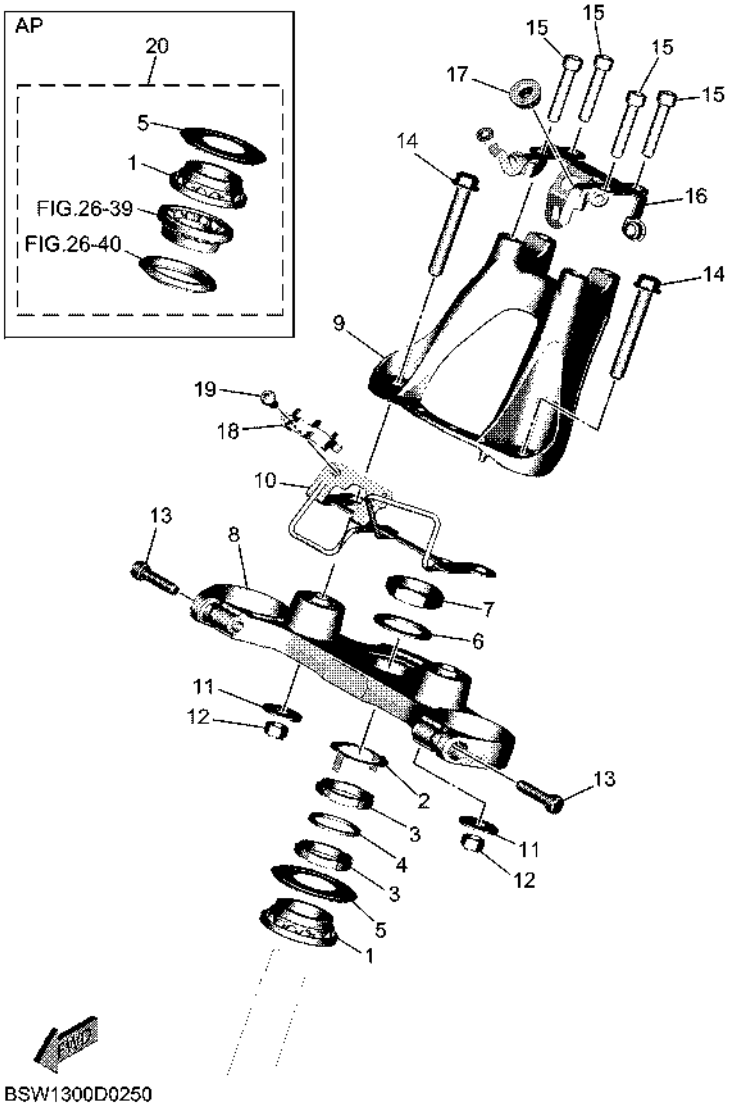

FIG. 25 STEERING

REF. NO.	PART NO.	DESCRIPTION	BYF1					REMARKS
1	93399–99932	BEARING	1					
2	4XV–23418–00	WASHER, SPECIAL	1					
3	90179–30006	NUT	2					
4	90202–30235	WASHER, PLATE	1					
5	4XV–23415–01	COVER, BALL RACE 1	1					
6	90201–28017	WASHER, PLATE	1					
7	90170–28419	NUT	1					
8	BC3–W2341–00	CROWN HANDLE	1					
9	BBW–23442–00	HOLDER, HANDLE LOWER	1					
10	BSW–2334H–00	BRACKET 2	1					
11	90201–10043	WASHER, PLATE	2					
12	95602–10100	NUT, U	2					
13	91312–08030	BOLT, HEXAGON SOCKET HEAD	2					
14	90105–10211	BOLT, FLANGE	2					
15	90110–08132	BOLT, HEXAGON SOCKET HEAD	4					
16	BBW–2334G–00	BRACKET 1	1					
17	90480–13567	GROMMET	1					
18	BC3–23857–00	HOLDER	1					
19	92012–06010	BOLT, BUTTON HEAD	1					
20	BMP–W000B–00	STEERING BEARING KIT	1					AP

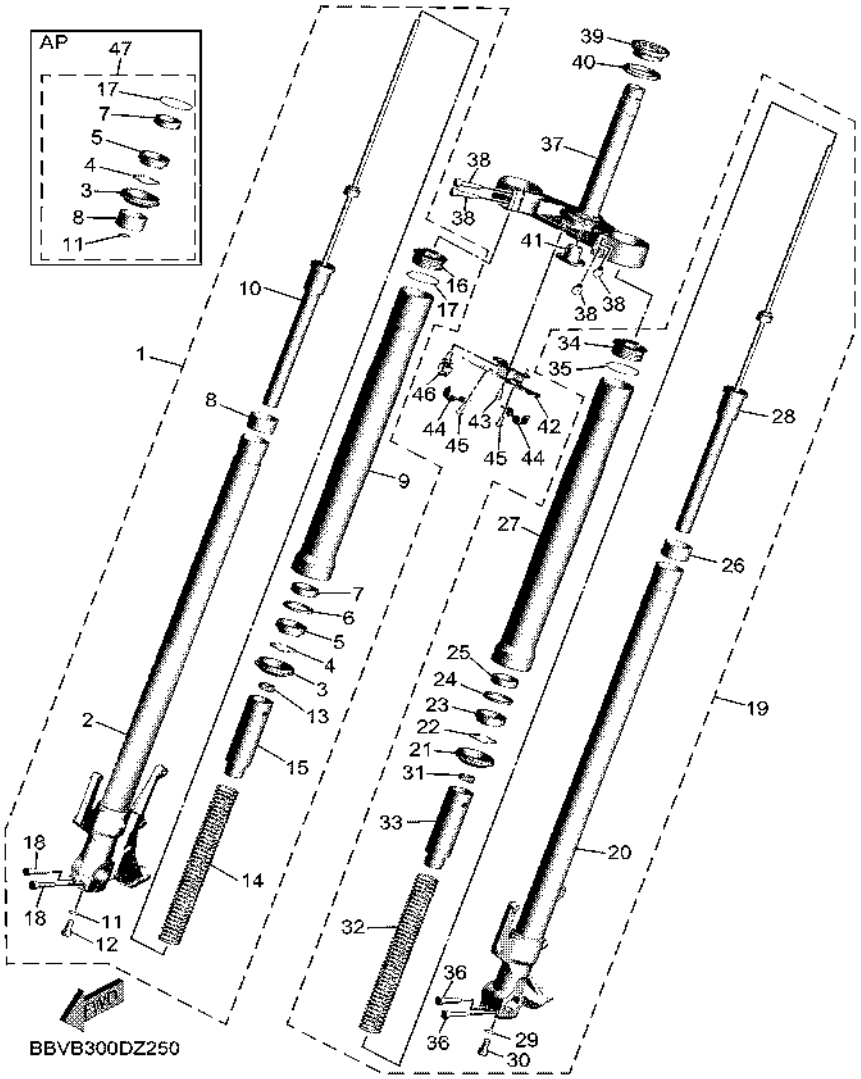

FIG. 26 FRONT FORK

REF. NO.	PART NO.	DESCRIPTION	BYF1					REMARKS
1	BBW–23103–00	FRONT FORK ASSY (R.H)	1					
2	BC3–23110–01	.INNER TUBE COMP.1	1					
3	4EB–23144–00	.SEAL, DUST	1					
4	26H–23156–00	.RING, SNAP	1					
5	4EB–23145–01	.OIL SEAL	1					
6	36Y–23146–10	.WASHER, OIL SEAL	1					
7	1RC–23125–00	.METAL, SLIDE 1	1					
8	4FM–23171–40	.METAL, SLIDE	1					
9	BC3–23126–00	.TUBE, OUTER (L.H)	1					
10	B7M–23170–10	.CYLINDER COMP., FRONT FORK	1					
11	509–23158–L0	.GASKET	1					(KYB)
12	278–23181–50	.BOLT, HEXAGON SOCKET HEAD	1					
13	3LC–23357–00	.NUT	1					
14	B7M–23141–00	.SPRING, FRONT FORK	1					
15	5VY–23118–00	.SPACER	1					
16	2PW–23111–00	.BOLT, CAP	1					
17	39P–23147–00	.O-RING	1					
18	91314–08040	.BOLT, HEXAGON SOCKET HEAD	2					
19	BBW–23102–00	FRONT FORK ASSY (L.H)	1					
20	BC3–23120–01	.INNER TUBE COMP.2	1					
21	4EB–23144–00	.SEAL, DUST	1					
22	26H–23156–00	.RING, SNAP	1					
23	4EB–23145–01	.OIL SEAL	1					
24	36Y–23146–10	.WASHER, OIL SEAL	1					
25	1RC–23125–00	.METAL, SLIDE 1	1					
26	4FM–23171–40	.METAL, SLIDE	1					
27	BC3–23126–00	.TUBE, OUTER (L.H)	1					

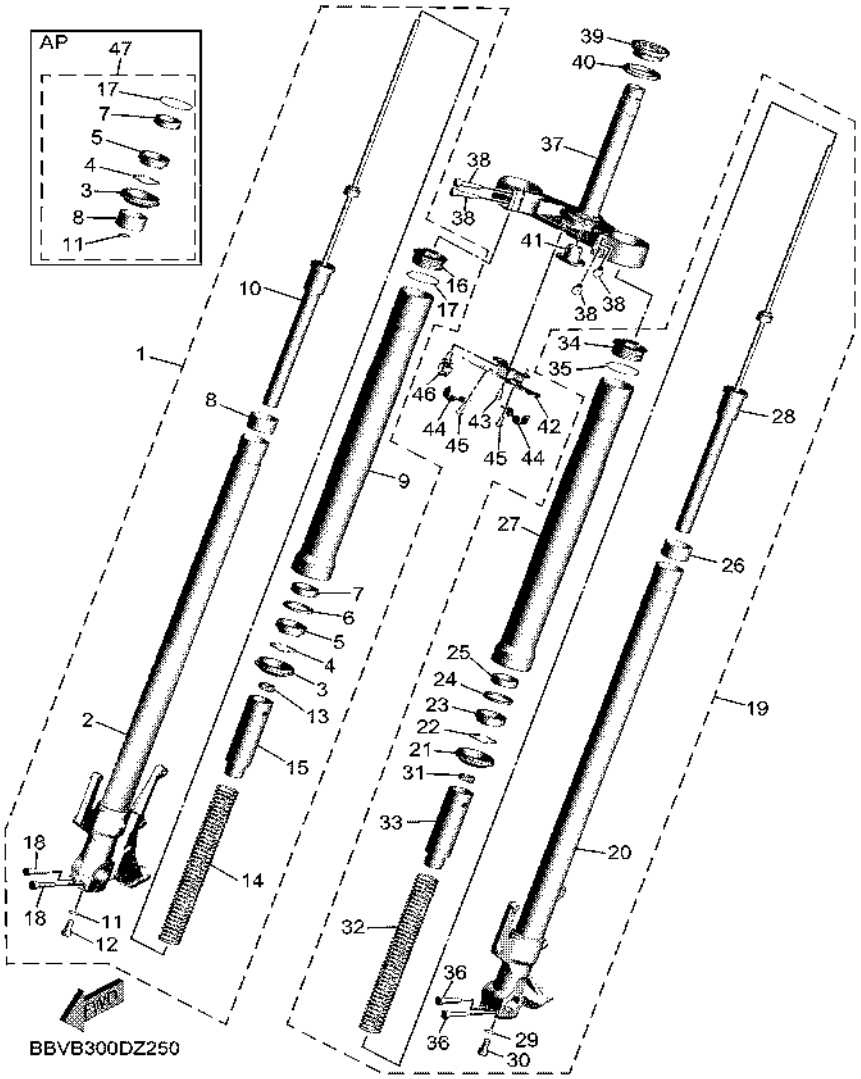

FIG. 26 FRONT FORK

REF. NO.	PART NO.	DESCRIPTION	BYF1					REMARKS
28	BBW–23170–00	.CYLINDER COMP., FRONT FORK	1					
29	509–23158–L0	.GASKET	1					(KYB)
30	278–23181–50	.BOLT, HEXAGON SOCKET HEAD	1					
31	3LC–23357–00	.NUT	1					
32	B7M–23141–00	.SPRING, FRONT FORK	1					
33	5VY–23118–00	.SPACER	1					
34	2PW–23111–00	.BOLT, CAP	1					
35	39P–23147–00	.O-RING	1					
36	91314–08040	.BOLT, HEXAGON SOCKET HEAD	2					
37	BC3–23340–00	UNDER BRACKET COMP.	1					
38	91312–08030	BOLT, HEXAGON SOCKET HEAD	4					
39	93399–99957	BEARING	1					
40	3FV–23462–00	SEAL, STEERING	1					
41	5PB–23123–00	COVER, UNDER 1	1					
42	BBW–2317E–00	STAY 1	1					
43	92017–06012	BOLT, BUTTON HEAD	1					
44	BBW–2317F–00	STAY 2	2					
45	92012–06012	BOLT, BUTTON HEAD	2					
46	90464–16012	CLAMP	1					
47	BBV–W003B–00	FORK SEALS KIT	1					AP

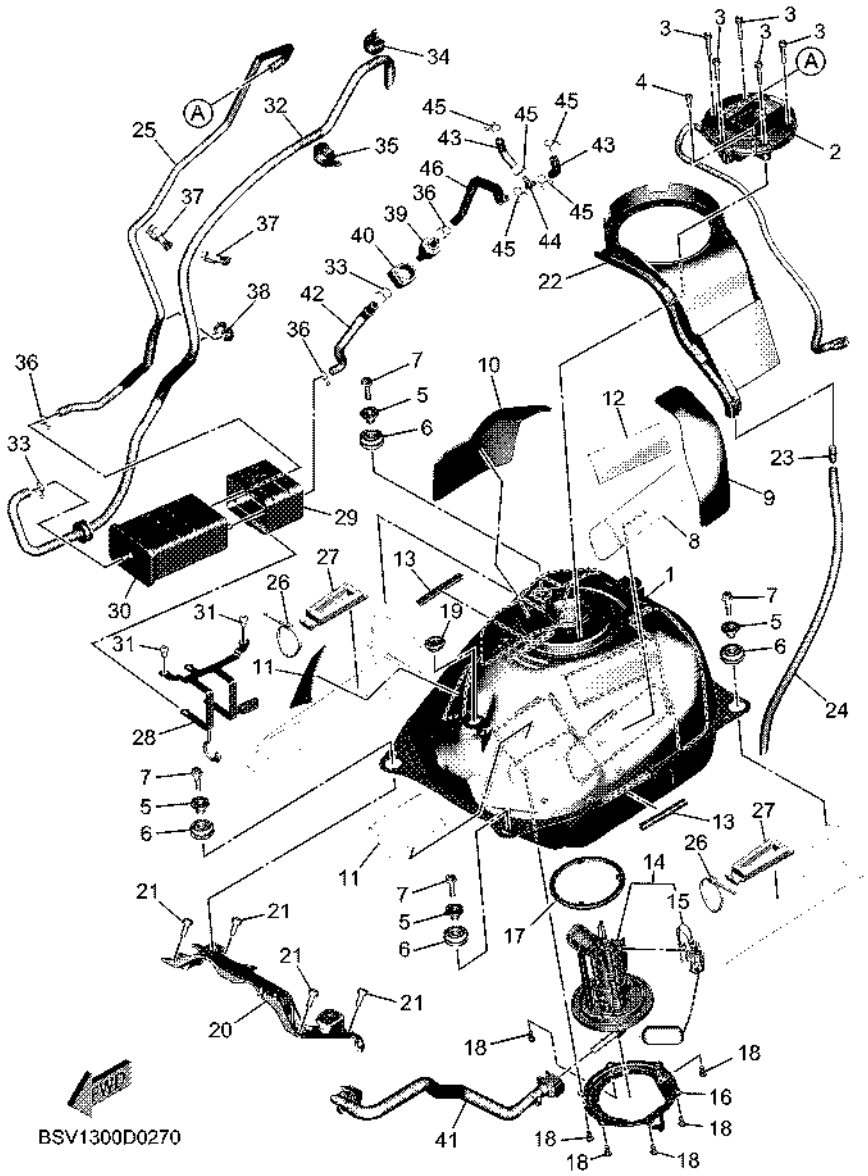

FIG. 27 FUEL TANK

REF. NO.	PART NO.	DESCRIPTION	BYF1					REMARKS
1	BBW–24110–00	FUEL TANK COMP.	1					
2	BBW–24610–04	CAP ASSY	1					
3	90110–05082	BOLT, HEXAGON SOCKET HEAD	5					
4	90110–05081	BOLT, HEXAGON SOCKET HEAD	1					
5	90387–062U9	COLLAR	4					
6	BBW–24339–00	GROMMET	4					
7	95D32–06025	BOLT, FLANGE DEEP RECESS	4					
8	BBW–2414H–00	DAMPER, PLATE 1	1					
9	BBW–2414J–00	DAMPER, PLATE 2	1					
10	BBW–2414K–00	DAMPER, PLATE 3	1					
11	90520–02016	DAMPER, PLATE	2					
12	3D8–2177M–00	DAMPER, LOCATING 3	1					
13	31A–24188–01	MOLD, FUEL TANK	2					
14	BBW–13907–00	FUEL PUMP COMP.	1					
15	BBW–85752–00	.SENDER	1					
16	BC3–24491–00	BRACKET, FUEL PUMP	1					
17	1S4–24486–00	O-RING	1					
18	91312–05010	BOLT, HEXAGON SOCKET HEAD	6					
19	90480–01558	GROMMET	1					
20	BSW–21345–00	BRACKET, TANK FITTING	1					
21	90110–06335	BOLT, HEXAGON SOCKET HEAD	4					
22	BBW–2414A–00	COVER, FILLER	1					
23	4JP–21753–00	BOSS, CONNECTOR	1					
24	BC3–24318–00	PIPE, OVERFLOW	1					
25	BBW–24313–00	PIPE 3	1					
26	1UA–82591–00	BAND	2					
27	BC3–24184–00	DAMPER, LOCATING 4	2					

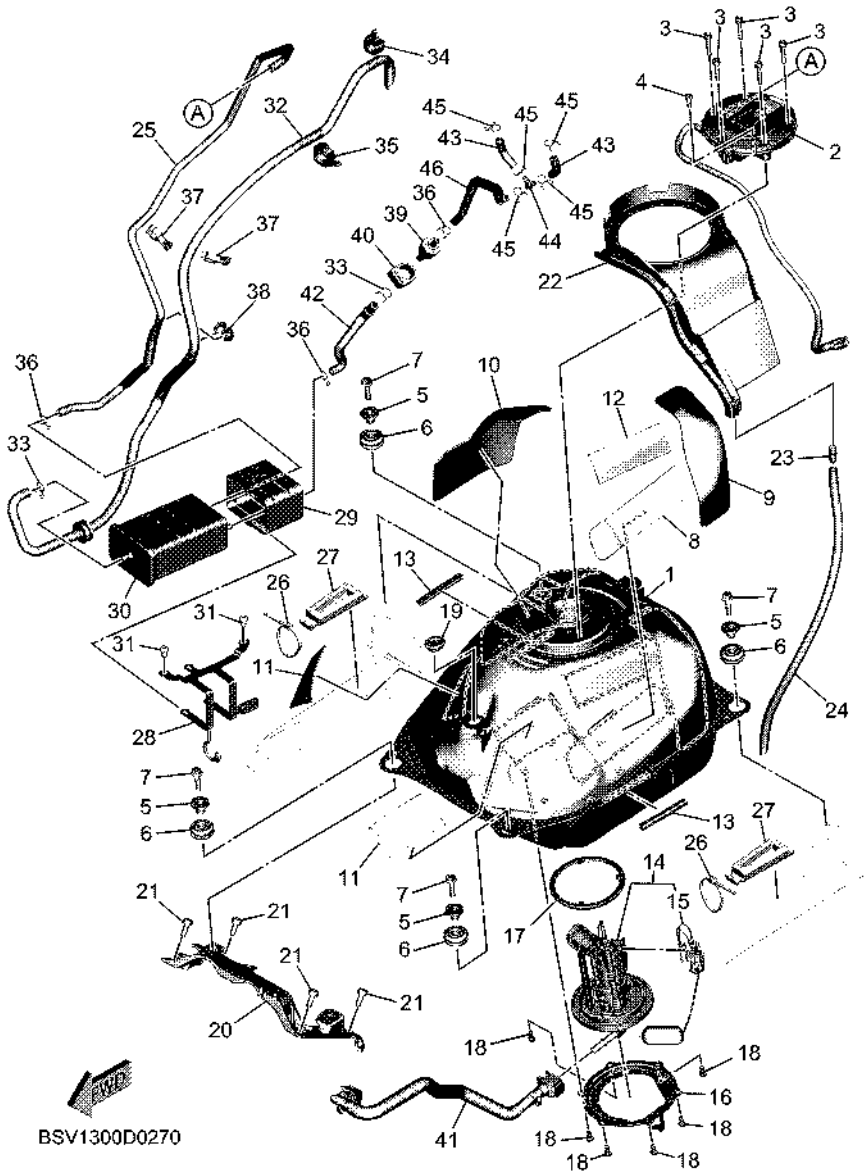

FIG. 27 FUEL TANK

REF. NO.	PART NO.	DESCRIPTION	BYF1					REMARKS
28	BBW–2419F–00	BRACKET, CANISTOR	1					
29	BC3–24183–00	DAMPER, LOCATING 3	1					
30	BC3–24170–00	CANISTER ASSY	1					
31	92012–06010	BOLT, BUTTON HEAD	2					
32	BBW–24316–00	PIPE 6	1					
33	90467–110A3	CLIP	2					
34	90464–12M58	CLAMP	1					
35	90464–14012	CLAMP	1					
36	90467–090A2	CLIP	3					
37	90464–20070	CLAMP	2					
38	90464–09M31	CLAMP	1					
39	B1X–F4421–00	VALVE, CHECK	1					
40	BBW–2419A–00	HOLDER	1					
41	BBW–13971–00	PIPE, FUEL 1	1					
42	BBW–24317–00	PIPE 7	1					
43	B7M–14465–00	PIPE	2					
44	90413–06031	WAY 3	1					
45	90467–09006	CLIP	5					
46	BBW–13758–00	PIPE, JOINT	1					

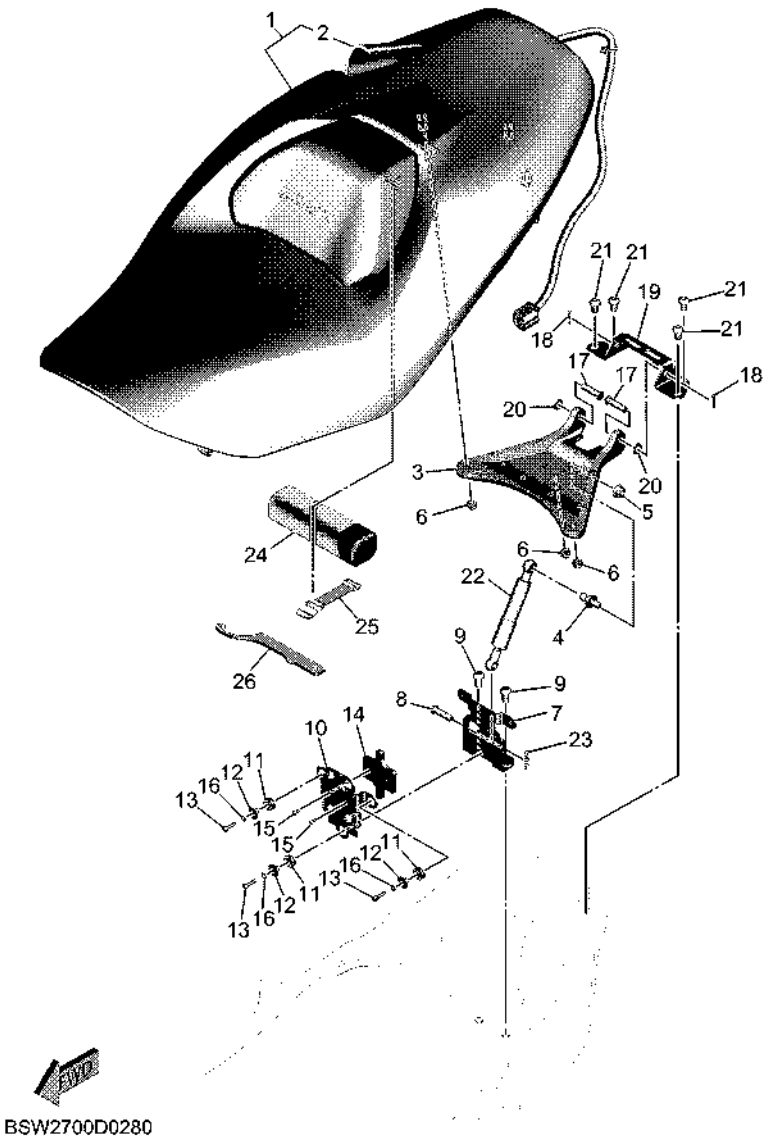

BSW2700D0280

FIG. 28 SEAT

REF. NO.	PART NO.	DESCRIPTION	BYF1					REMARKS
1	BBW–24730–20	DOUBLE SEAT ASSY	1					
2	BBW–24731–20	.COVER, SEAT	1					
3	BSW–24726–00	HINGE, SEAT	1					
4	4B5–2474E–00	ARM	1					
5	95602–08200	NUT, U FLANGE	1					
6	95602–06200	NUT, SELF-LOCKING	3					
7	BSW–24718–00	BRACKET, SEAT	1					
8	91702–08028	PIN, CLEVIS	1					
9	92012–08014	BOLT, BUTTON HEAD	2					
10	BSW–24752–00	PLATE	1					
11	BSW–24742–00	GROMMET	3					
12	B7N–83522–00	COLLAR	3					
13	91312–04016	BOLT, HEXAGON SOCKET HEAD	3					
14	BSW–24764–00	PLATE, BOTTOM	1					
15	98502–03008	SCREW, PAN HEAD	2					
16	92902–04600	WASHER, PLATE	3					
17	91702–08028	PIN, CLEVIS	2					
18	91402–25015	PIN, COTTER	2					
19	BBW–24769–01	HINGE, SEAT	1					
20	90201–080E2	WASHER, PLATE	2					
21	92012–08012	BOLT, BUTTON HEAD	4					
22	BBW–2478G–01	STOPPER	1					
23	90468–16001	CLIP	1					
24	BBW–28100–10	TOOL KIT	1					
25	21V–21376–00	BAND, TOOL	1					
26	1RC–28135–00	SPANNER, SPECIAL	1					

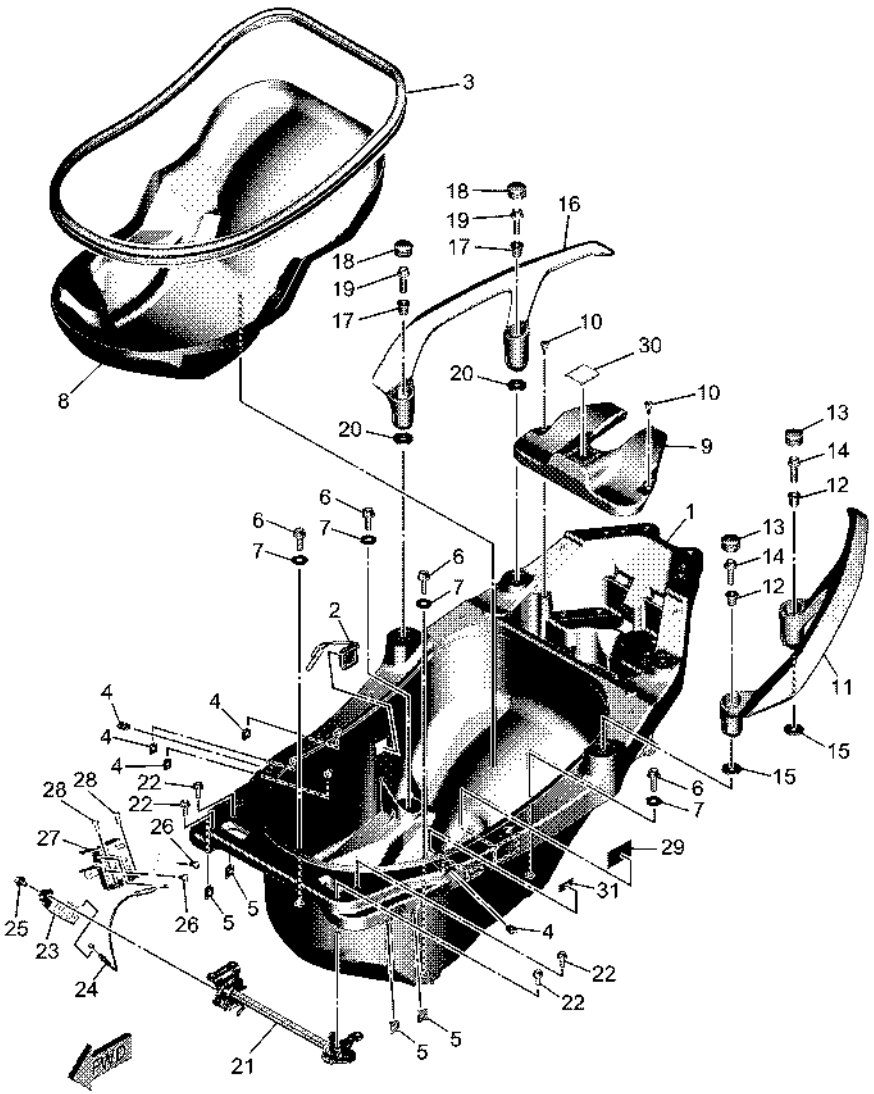

FIG. 29 SEAT 2

REF. NO.	PART NO.	DESCRIPTION	BYF1					REMARKS
1	BBW–2473R–00	BOX 1	1					
2	B74–H4770–00	LAMP, ACCESSORY	1					
3	BBW–2173M–01	SEAL 3	1					
4	90183–05076	NUT, SPRING	5					
5	90183–060A6	NUT, SPRING	4					
6	95D32–08025	BOLT, FLANGE DEEP RECESS	4					
7	90201–08103	WASHER, PLATE	4					
8	BBW–24747–00	DAMPER, SEAT	1					
9	BBW–2471P–00	PLATE, COVER	1					
10	90269–06008	RIVET	2					
11	BBW–2474A–00–P7	ASSIST, GRIP	1					UR FOR BNC2
	BBW–2474A–00–P5	ASSIST, GRIP	1					UR FOR MDRNP1
12	90387–08128	COLLAR	2					
13	4B5–2476U–00	PROTECTOR 1	2					
14	90105–08150	BOLT, FLANGE	2					
15	90201–08122	WASHER, PLATE	2					
16	BBW–2474W–00–P7	ASSIST,GRIP 2	1					UR FOR BNC2
	BBW–2474W–00–P5	ASSIST,GRIP 2	1					UR FOR MDRNP1
17	90387–08128	COLLAR	2					
18	4B5–2476U–00	PROTECTOR 1	2					
19	90105–08150	BOLT, FLANGE	2					
20	90201–08122	WASHER, PLATE	2					
21	BBW–24780–00	SEAT LOCK ASSY	1					
22	95D32–06016	BOLT, FLANGE DEEP RECESS	4					
23	BBW–24885–00	GUIDE, WIRE	1					
24	BBW–2479D–00	WIRE, SEAT LOCK 2	1					
25	95D32–06010	BOLT, FLANGE DEEP RECESS	1					

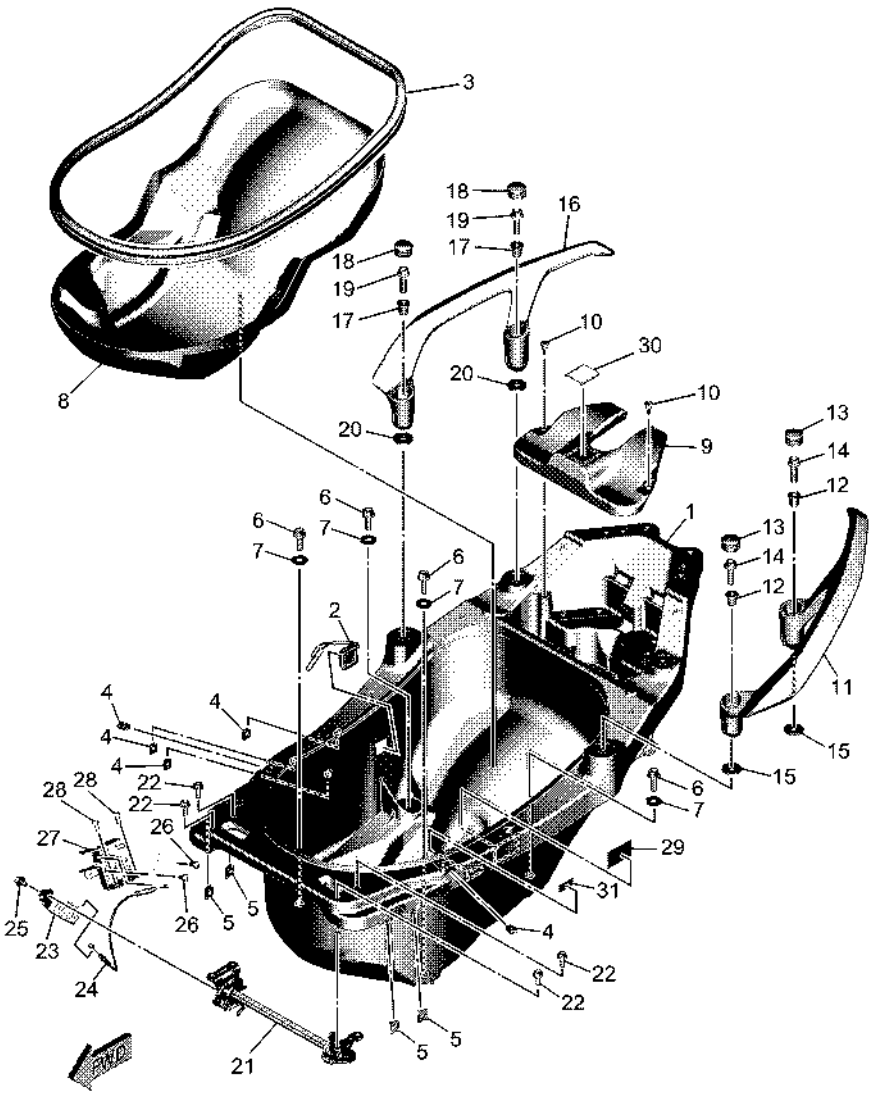

FIG. 29 SEAT 2

REF. NO.	PART NO.	DESCRIPTION	BYF1					REMARKS
26	92012–06012	BOLT, BUTTON HEAD	2					
27	BBW–2117K–00	STAY, LOCK	1					
28	92012–06012	BOLT, BUTTON HEAD	2					
29	BC3–21668–01	LABEL, TIRE	1					
30	B5Y–2815P–10	LABEL, NOTICE 1	1					
31	3LD–24877–A1	LABEL, CAUTION	1					ENGLISH

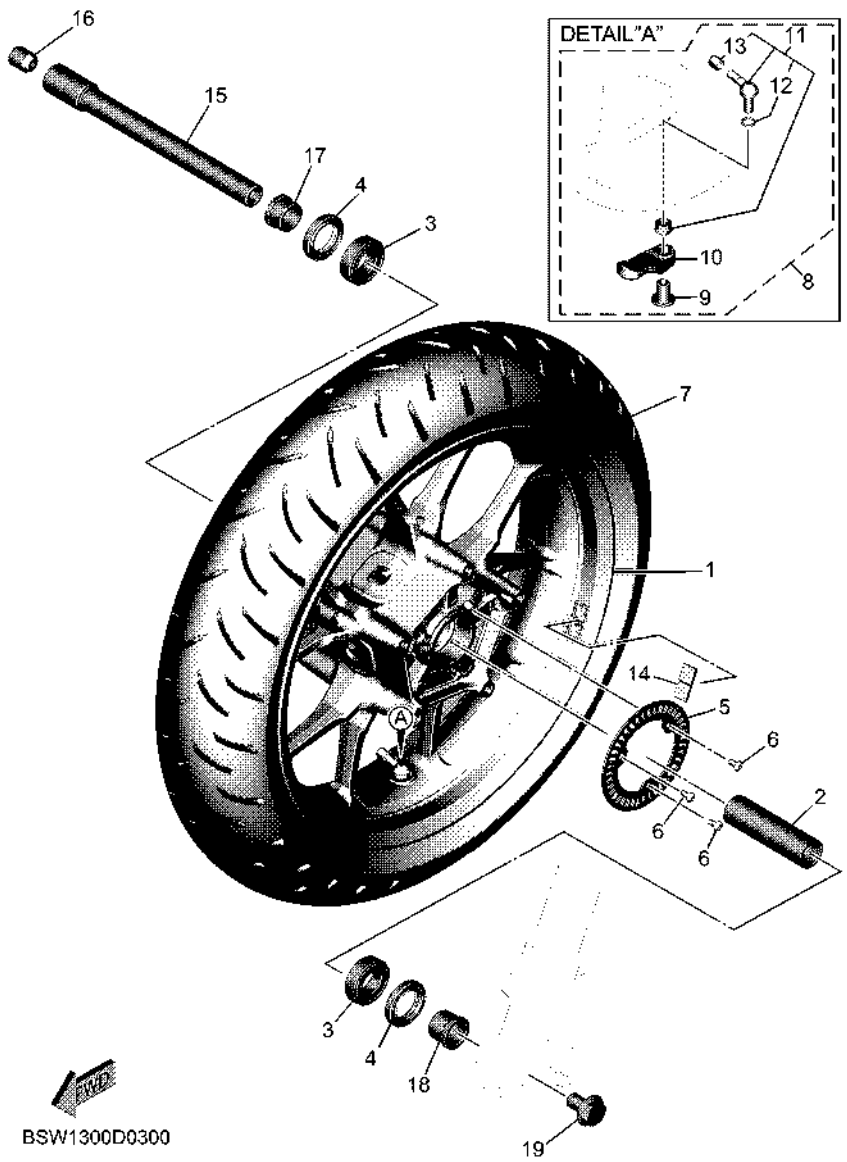

FIG. 30 FRONT WHEEL

REF. NO.	PART NO.	DESCRIPTION	BYF1					REMARKS
1	BSW–25168–01	CAST WHEEL, FRONT	1					
2	5EA–25117–00	SPACER, BEARING	1					
3	93306–07208	BEARING	2					
4	93106–28043	OIL SEAL	2					
5	2DR–2517G–00	ROTOR, SENSOR	1					
6	90149–05030	SCREW	3					
7	94112–15020	TIRE (120/70R15M/C 56H)	1					BRIDGESTONE
8	BSW–W8276–01	TIRE PRESSURE SENSOR KIT	1					
9	BSW–82114–00	.NUT	1					
10	BSW–W8598–00	.PRESSURE SENSOR KIT	1					
11	BSW–25170–00	.AIR VALVE ASSY	1					
12	BSW–251H4–00	..O-RING	1					
13	B5Y–25188–00	..CAP	1					
14	23P–25398–00	BALANCER, WHEEL	1					UN
15	BC3–25181–00	AXLE, WHEEL	1					
16	5PW–25188–00	CAP	1					
17	90387–22016	COLLAR	1					
18	90387–22030	COLLAR	1					
19	90105–14002	BOLT, FLANGE	1					

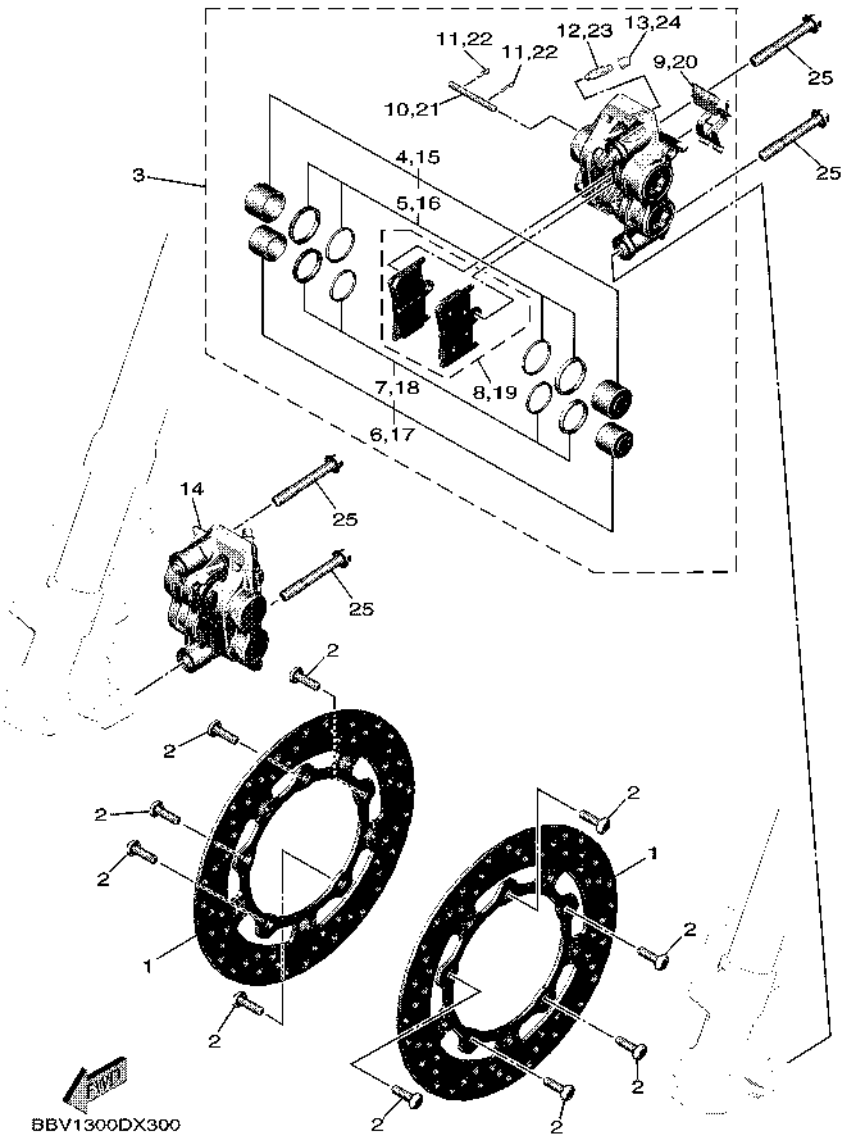

FIG. 31 FRONT BRAKE CALIPER

REF. NO.	PART NO.	DESCRIPTION	BYF1					REMARKS
1	BBW–2581T–00	DISK BRAKE ASSY	2					
2	90109–083G4	BOLT	10					
3	2PW–2580T–20	CALIPER ASSY (LEFT)	1					
4	4SV–25802–10	.PISTON ASSY, CALIPER	1					
5	3GM–25803–10	..CALIPER SEAL KIT	1					
6	4SV–25802–00	.PISTON ASSY, CALIPER	1					
7	3MA–25803–10	..CALIPER SEAL KIT	1					
8	4B5–25805–00	.BRAKE PAD KIT	1					
9	13S–25919–00	.SUPPORT, PAD	1					
10	4SV–25924–00	.PIN, PAD	1					
11	3GM–25925–00	.CLIP	2					
12	1J3–25824–00	.SCREW, BLEED	1					
13	306–25825–01	.CAP	1					
14	2PW–2580U–20	CALIPER ASSY (RIGHT)	1					
15	4SV–25802–10	.PISTON ASSY, CALIPER	1					
16	3GM–25803–10	..CALIPER SEAL KIT	1					
17	4SV–25802–00	.PISTON ASSY, CALIPER	1					
18	3MA–25803–10	..CALIPER SEAL KIT	1					
19	4B5–25805–00	.BRAKE PAD KIT	1					
20	13S–25919–00	.SUPPORT, PAD	1					
21	4SV–25924–00	.PIN, PAD	1					
22	3GM–25925–00	.CLIP	2					
23	1J3–25824–00	.SCREW, BLEED	1					
24	306–25825–01	.CAP	1					
25	90105–10440	BOLT, FLANGE	4					

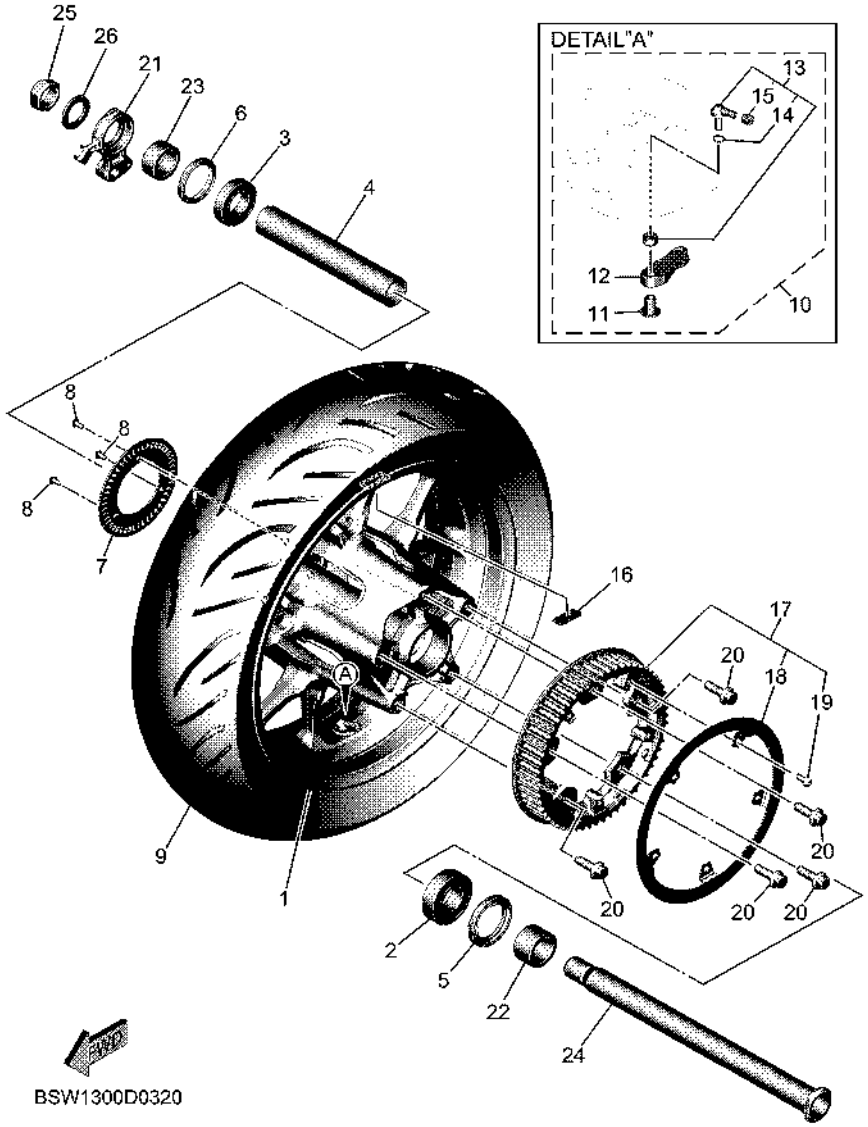

FIG. 32 REAR WHEEL

REF. NO.	PART NO.	DESCRIPTION	BYF1					REMARKS
1	BSW–25338–01	CAST WHEEL, REAR	1					
2	93306–205B5	BEARING	1					
3	93306–07809	BEARING	1					
4	59C–25317–01	SPACER, BEARING	1					
5	93106–40013	OIL SEAL	1					
6	93106–40027	OIL SEAL	1					
7	1XC–2517G–00	ROTOR, SENSOR	1					
8	90149–05030	SCREW	3					
9	94116–15024	TIRE (160/60R15M/C 67H)	1					BRIDGESTONE
10	BSW–W8276–01	TIRE PRESSURE SENSOR KIT	1					
11	BSW–82114–00	.NUT	1					
12	BSW–W8598–00	.PRESSURE SENSOR KIT	1					
13	BSW–25170–00	.AIR VALVE ASSY	1					
14	BSW–251H4–00	..O-RING	1					
15	B5Y–25188–00	..CAP	1					
16	23P–25398–00	BALANCER, WHEEL	1					
17	BC3–25470–00	SPROCKET, DRIVEN (59T)	1					
18	BC3–27883–00	.GEAR, RING	1					
19	90111–06064	.BOLT, HEXAGON SOCKET BUTTON	5					
20	90105–10237	BOLT, FLANGE	5					
21	2PW–2537A–00	HOUSING, SENSOR REAR	1					
22	BC3–25376–00	COLLAR, WHEEL	1					
23	2PW–25377–10	COLLAR, WHEEL	1					
24	BC3–25381–00	AXLE, WHEEL	1					
25	90185–24002	NUT, SELF-LOCKING	1					
26	90201–25020	WASHER, PLATE	1					

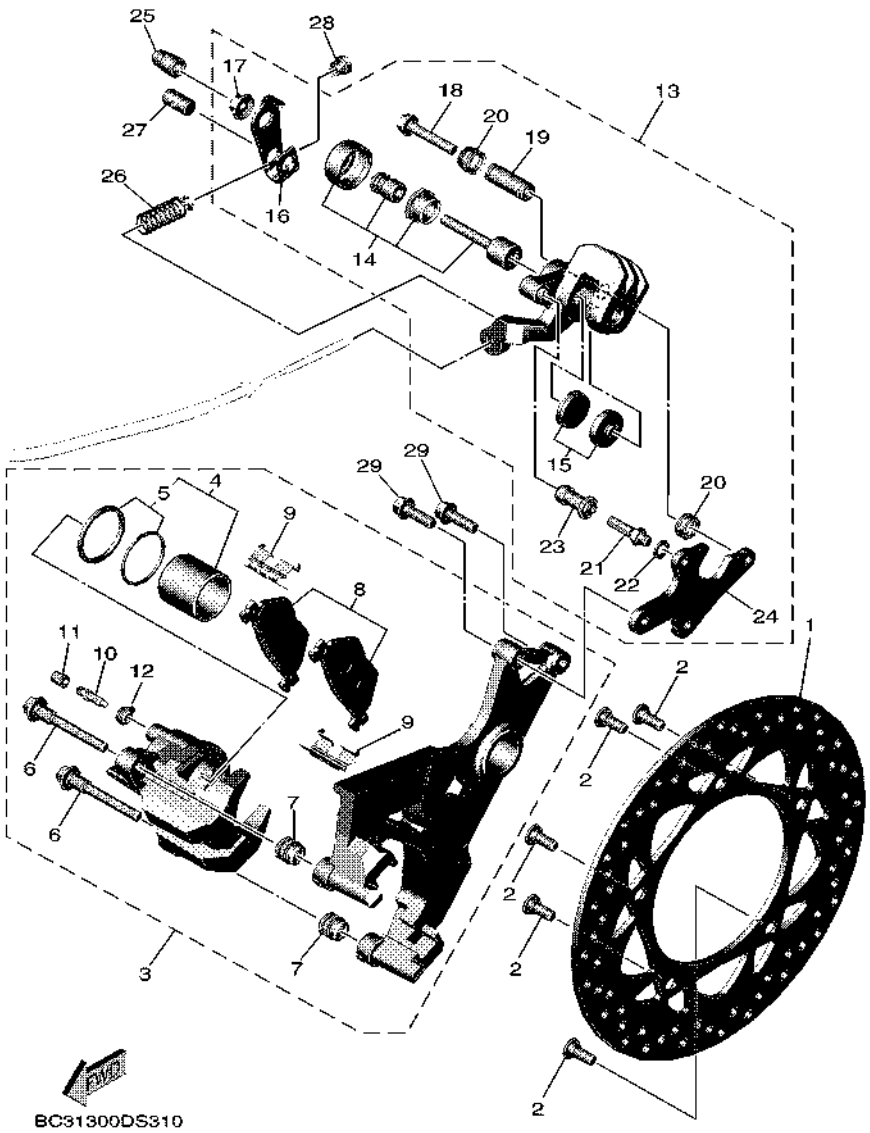

FIG. 33 REAR BRAKE CALIPER

REF. NO.	PART NO.	DESCRIPTION	BYF1					REMARKS
1	59C–2582W–00	DISK, REAR BRAKE 2	1					
2	90149–08009	SCREW	5					
3	59C–2580W–01	CALIPER ASSY, REAR 2	1					
4	59C–25802–00	.PISTON ASSY, CALIPER	1					
5	59C–25803–00	..CALIPER SEAL KIT	1					
6	59C–25914–00	.PIN, SLIDE	2					
7	4TT–25937–00	.BOOT 2	2					
8	59C–25806–00	.BRAKE PAD KIT 2	1					
9	5JW–25919–00	.SUPPORT, PAD	2					
10	5GM–25824–00	.SCREW, BLEED	1					
11	1D7–25825–00	.CAP	1					
12	5GM–25975–00	.RUBBER, BUSHING	1					
13	2PW–259A0–00	CALIPER ASSY 2	1					
14	59C–25802–50	.PISTON ASSY, CALIPER	1					
15	59C–25805–50	.BRAKE PAD KIT	1					
16	59C–259A3–00	.ARM	1					
17	59C–259A4–00	.NUT, ADJUSTING	1					
18	59C–25914–50	.PIN, SLIDE	1					
19	59C–25838–00	.SLEEVE, CALIPER	1					
20	1UY–25917–51	.BOOT, CALIPER	2					
21	1UY–25926–51	.BOLT	1					
22	1UY–25938–51	.WASHER, SPRING	1					
23	1UY–25937–51	.BOOT 2	1					
24	2PW–25921–50	.BRACKET, SUPPORT	1					
25	59C–25825–00	CAP	1					
26	59C–25333–01	SPRING, RETURN	1					
27	90249–12004	PIN	1					

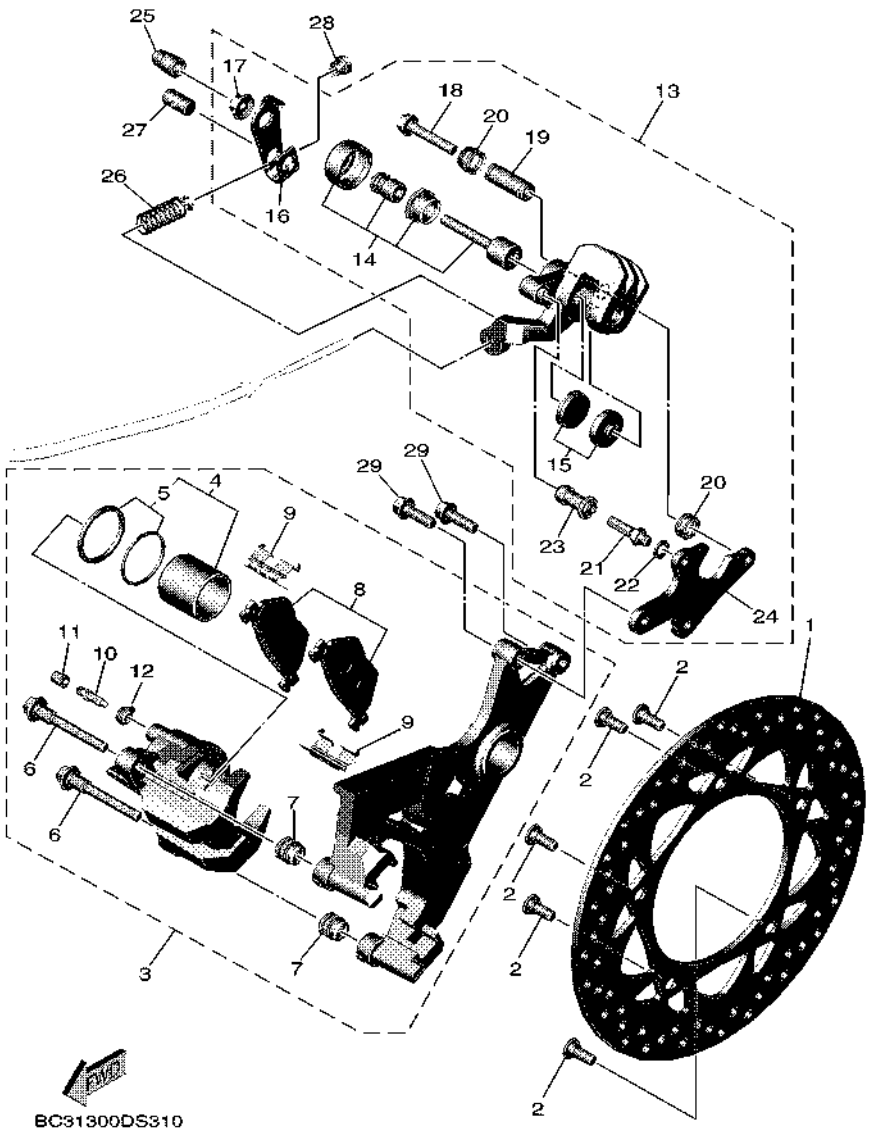

FIG. 33 REAR BRAKE CALIPER

REF. NO.	PART NO.	DESCRIPTION	BYF1					REMARKS
28	90179–06018	NUT	1					
29	90105–08182	BOLT, FLANGE	2					

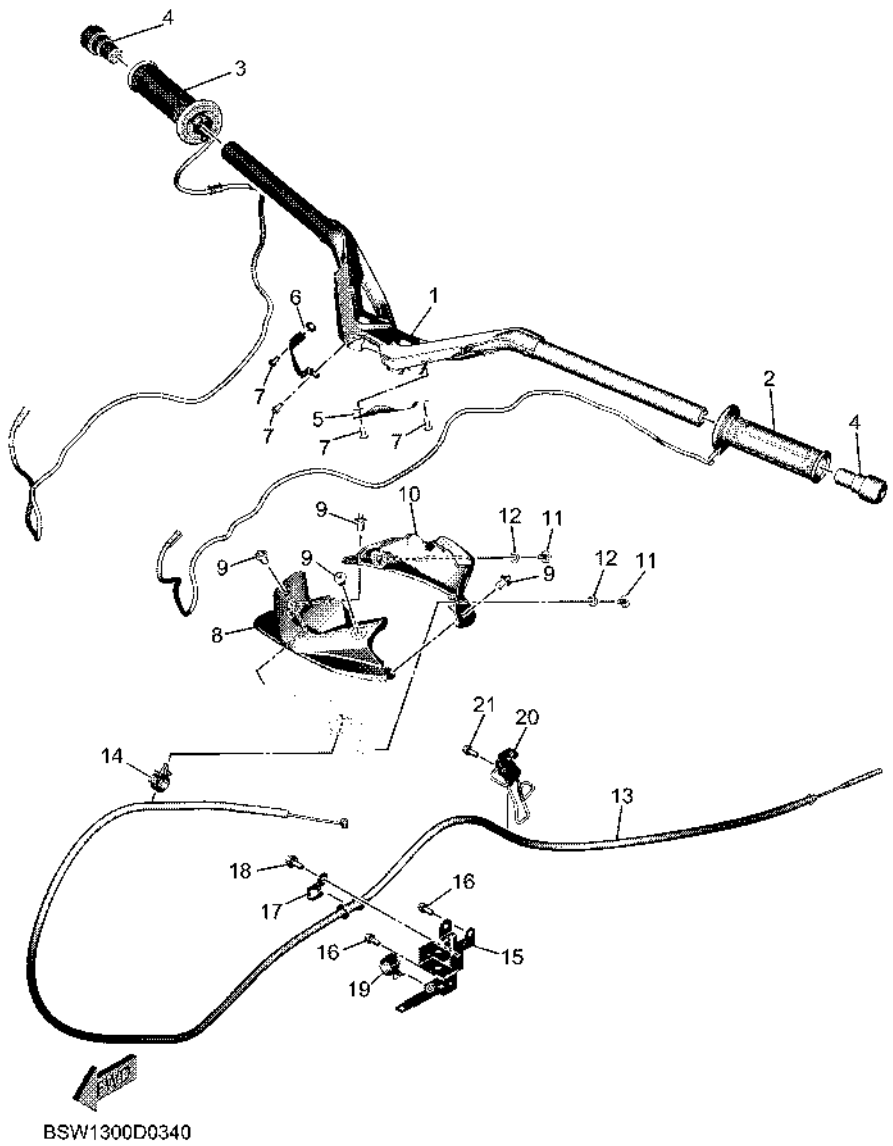

FIG. 34 STEERING HANDLE & CABLE

REF. NO.	PART NO.	DESCRIPTION	BYF1					REMARKS
1	BBW–26111–00	HANDLEBAR	1					
2	BSW–82963–00	GRIP, WARMER (LEFT)	1					
3	BSW–82960–00	GRIP, WARMER	1					
4	5EB–26246–00	END, GRIP	2					
5	BBW–26144–00	COVER, HANDLEBAR LOWER 1	1					
6	BBW–26146–00	COVER, HANDLEBAR LOWER 2	1					
7	98507–05010	SCREW, PAN HEAD	4					
8	BBW–26143–00	COVER, HANDLE UPPER 1	1					
9	90269–06019	RIVET	4					
10	BBW–26145–00	COVER, HANDLE 2	1					
11	90111–05002	BOLT, HEXAGON SOCKET BUTTON	2					
12	90387–05072	COLLAR	2					
13	BBW–2835X–00	WIRE	1					
14	90464–16006	CLAMP	1					
15	BBW–26279–00	GUIDE, CABLE	1					
16	95E32–06012	BOLT, FLANGE DEEP RECESS	2					
17	4B5–26131–00	GUIDE, CABLE 1	1					
18	95D32–06014	BOLT, FLANGE DEEP RECESS	1					
19	90464–16006	CLAMP	1					
20	BSW–27982–00	BRACKET, WIRE	1					
21	95E32–06012	BOLT, FLANGE DEEP RECESS	1					

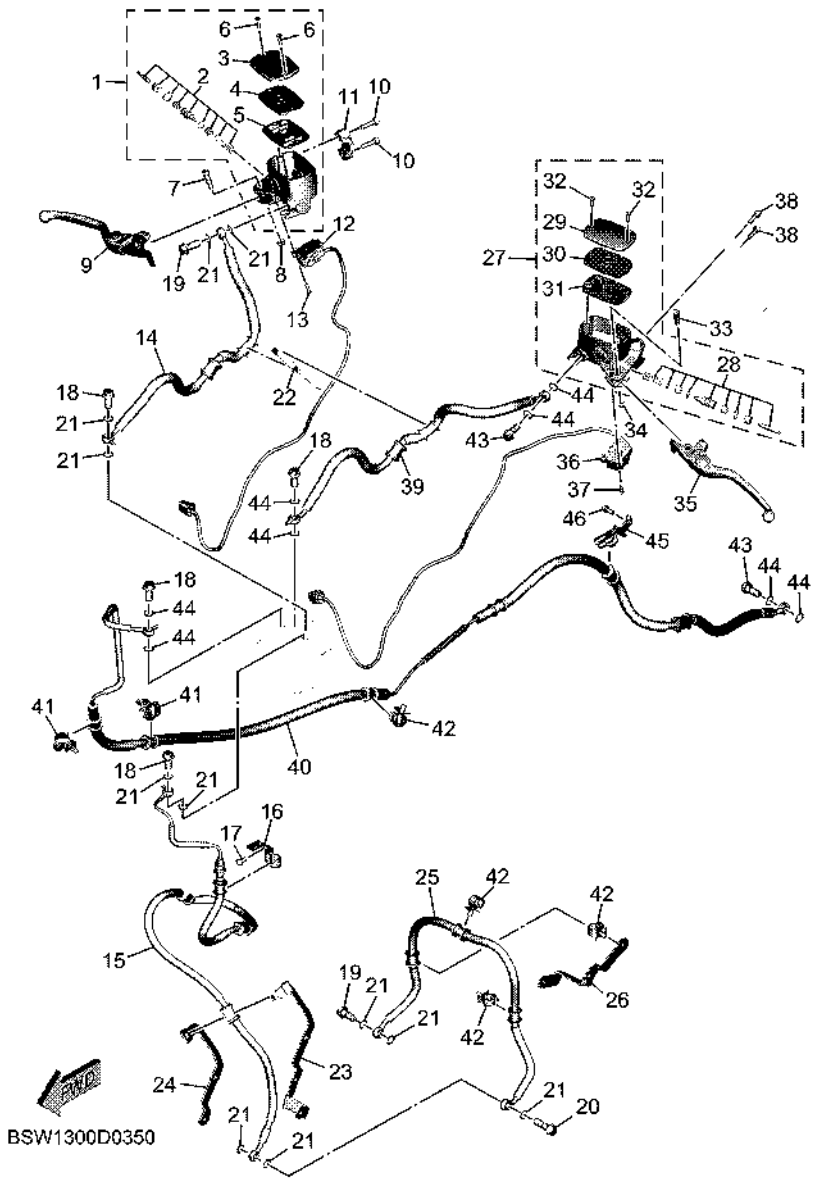

FIG. 35 FRONT MASTER CYLINDER

REF. NO.	PART NO.	DESCRIPTION	BYF1					REMARKS
1	BC3–2580A–00	MASTER CYLINDER SUB ASSY 2	1					
2	BC3–25807–00	.CYLINDER KIT, MASTER	1					
3	4B5–25852–00	.CAP, RESERVOIR	1					
4	4B5–25855–00	.BUSH,DIAPHRAGM	1					
5	4B5–25854–00	.DIAPHRAGM, RESERVOIR	1					
6	5VS–2589H–00	.SCREW	2					
7	5VS–2589F–00	BOLT, LEVER	1					
8	95617–06100	NUT, SELF-LOCKING	1					
9	2PW–83922–00	LEVER 2	1					
10	5VS–26332–00	BOLT	2					
11	5VS–25867–00	BRACKET, MASTER CYLINDER	1					
12	BSW–83980–00	FRONT STOP SWITCH ASSY	1					
13	97602–04214	SCREW, PAN HEAD WITH WASHER	1					
14	BBW–25874–01	HOSE, BRAKE 3	1					
15	BBW–25873–00	HOSE, BRAKE 2	1					
16	BBW–25887–00	HOLDER, BRAKE HOSE 3	1					
17	92012–06012	BOLT, BUTTON HEAD	1					
18	90401–10020	BOLT, UNION	4					
19	90401–10020	BOLT, UNION	2					
20	90401–10038	BOLT, UNION	1					
21	90430–10005	GASKET	11					
22	90460–15126	CLAMP, HOSE	1					
23	BBW–25875–00	HOLDER, BRAKE HOSE 1	1					
24	BBW–2612E–00	BRACKET	1					
25	BBW–2584D–00	HOSE, BRAKE	1					
26	BBW–25876–00	HOLDER, BRAKE HOSE 2	1					
27	BC3–2580A–10	MASTER CYLINDER SUB ASSY 2	1					

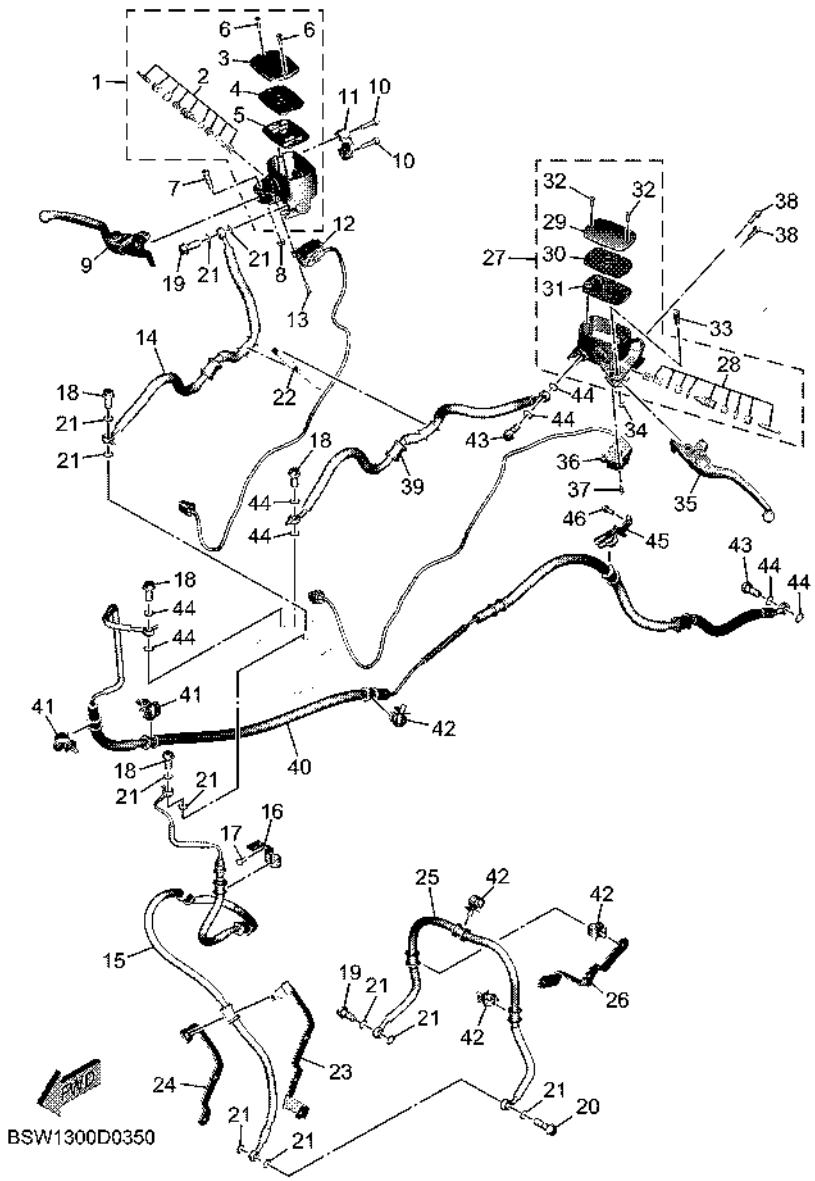

FIG. 35 FRONT MASTER CYLINDER

REF. NO.	PART NO.	DESCRIPTION	BYF1					REMARKS
28	BC3–25807–10	.CYLINDER KIT, MASTER	1					
29	4B5–25852–00	.CAP, RESERVOIR	1					
30	4B5–25855–00	.BUSH,DIAPHRAGM	1					
31	4B5–25854–00	.DIAPHRAGM, RESERVOIR	1					
32	5VS–2589H–00	.SCREW	2					
33	5VS–2589F–00	BOLT, LEVER	1					
34	95617–06100	NUT, SELF-LOCKING	1					
35	2PW–83912–00	LEVER 1	1					
36	BSW–82917–00	SWITCH	1					
37	97602–04214	SCREW, PAN HEAD WITH WASHER	1					
38	5VS–26332–00	BOLT	2					
39	BBW–2584B–01	HOSE, BRAKE	1					
40	BBW–2584C–00	HOSE, BRAKE	1					
41	90464–16012	CLAMP	2					
42	90464–14013	CLAMP	4					
43	90401–10020	BOLT, UNION	2					
44	90430–10005	GASKET	8					
45	BBW–25886–00	HOLDER, BRAKE HOSE	1					
46	95E32–06012	BOLT, FLANGE DEEP RECESS	1					

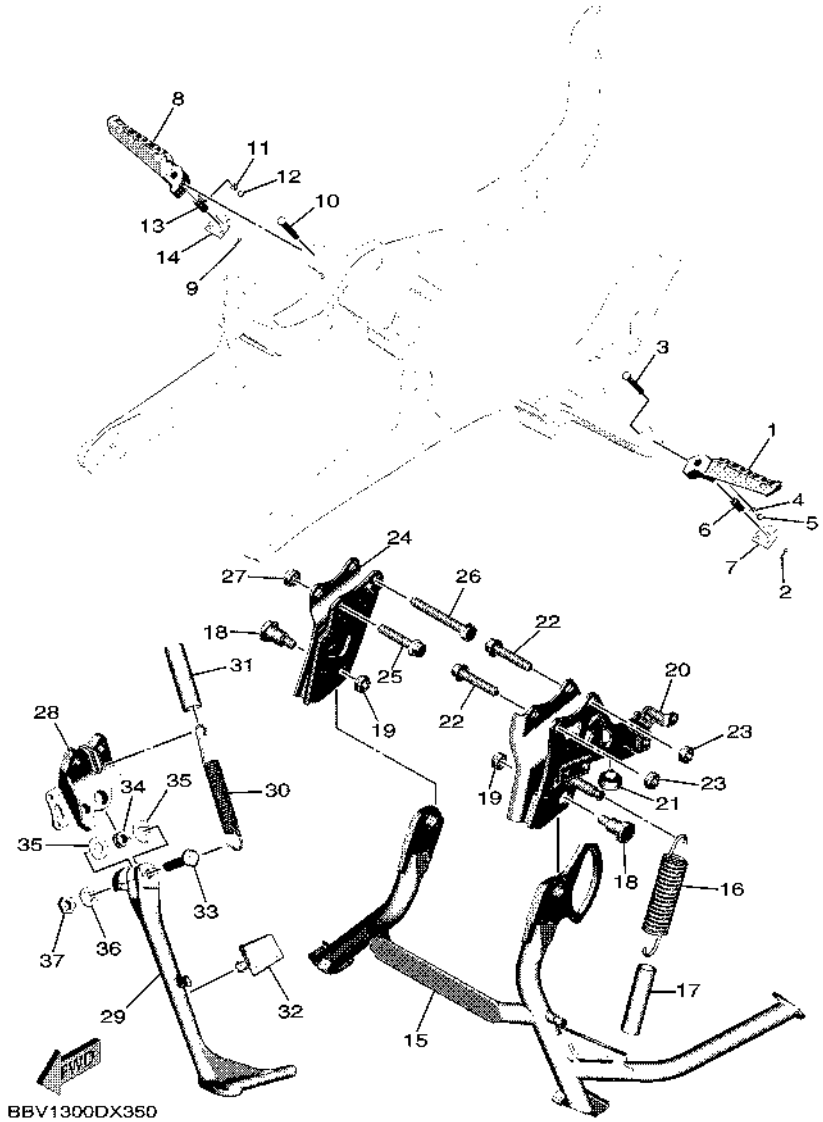

FIG. 36 STAND & FOOTREST

REF. NO.	PART NO.	DESCRIPTION	BYF1					REMARKS
1	B7M–27431–00	FOOTREST, REAR 1	1					
2	91402–20012	PIN, COTTER	1					
3	91702–06038	PIN, CLEVIS	1					
4	90501–15001	SPRING, COMPRESSION	1					
5	93501–04011	BALL	1					
6	90387–064H8	COLLAR	1					
7	4B5–27437–00	WASHER, SPECIAL	1					
8	B7M–27441–00	FOOTREST, REAR 2	1					
9	91402–20012	PIN, COTTER	1					
10	91702–06038	PIN, CLEVIS	1					
11	90501–15001	SPRING, COMPRESSION	1					
12	93501–04011	BALL	1					
13	90387–064H8	COLLAR	1					
14	4B5–27437–00	WASHER, SPECIAL	1					
15	B7M–27111–00	STAND, MAIN	1					
16	90506–40007	SPRING, TENSION	1					
17	BC3–2247A–00	HOSE 1	1					
18	90109–10067	BOLT	2					
19	90185–10060	NUT, SELF-LOCKING	2					
20	BC3–27151–00	BRACKET, MAIN STAND	1					
21	36C–27114–00	STOPPER, MAIN STAND	1					
22	90105–10283	BOLT, FLANGE	2					
23	90185–10022	NUT, SELF-LOCKING	2					
24	B7M–27152–00	BRACKET, MAIN STAND 2	1					
25	90105–10283	BOLT, FLANGE	1					
26	90101–10046	BOLT	1					
27	90185–10022	NUT, SELF-LOCKING	1					

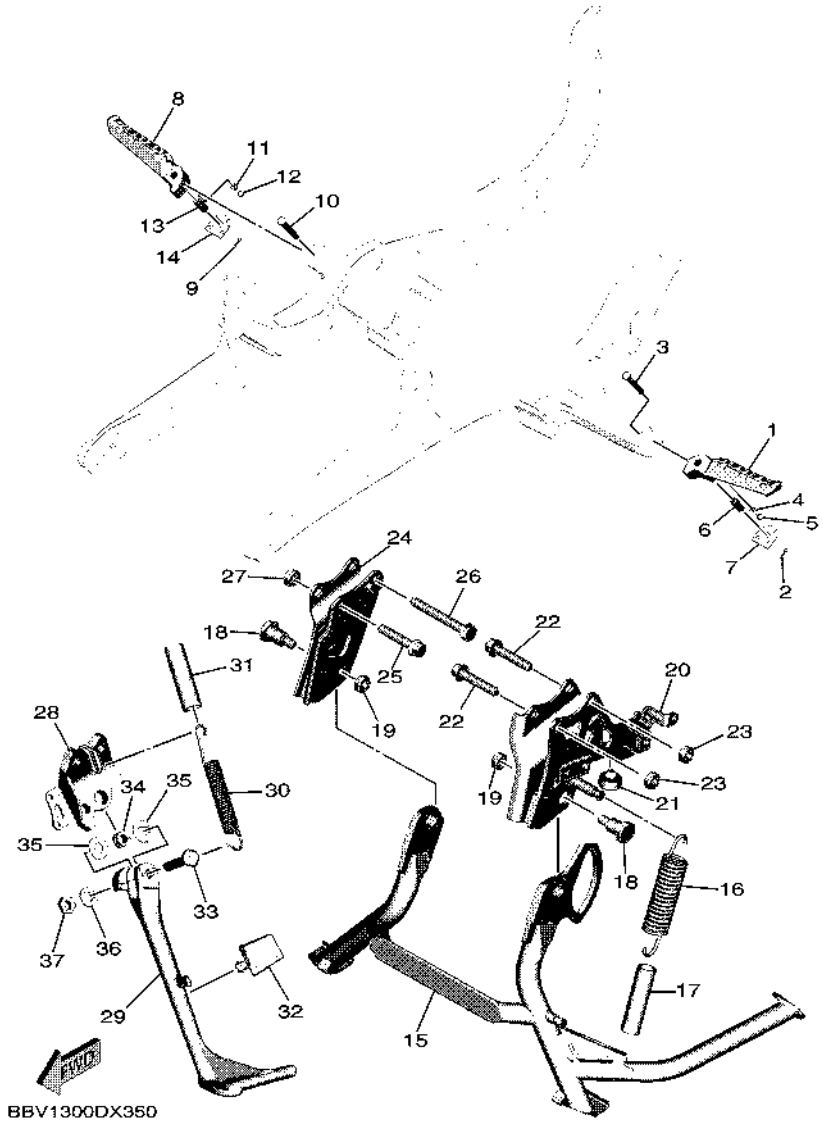

FIG. 36 STAND & FOOTREST

REF. NO.	PART NO.	DESCRIPTION	BYF1					REMARKS
28	BC3–27321–00	BRACKET, SIDE STAND	1					
29	59C–27311–00	STAND, SIDE	1					
30	90506–23014	SPRING, TENSION	1					
31	90445–217G3	HOSE (L70)	1					
32	BC3–27114–00	STOPPER, MAIN STAND	1					
33	90111–10007	BOLT, HEXAGON SOCKET BUTTON	1					
34	90387–10020	COLLAR	1					
35	90201–10051	WASHER, PLATE	2					
36	90201–10035	WASHER, PLATE	1					
37	90185–10012	NUT, SELF-LOCKING	1					

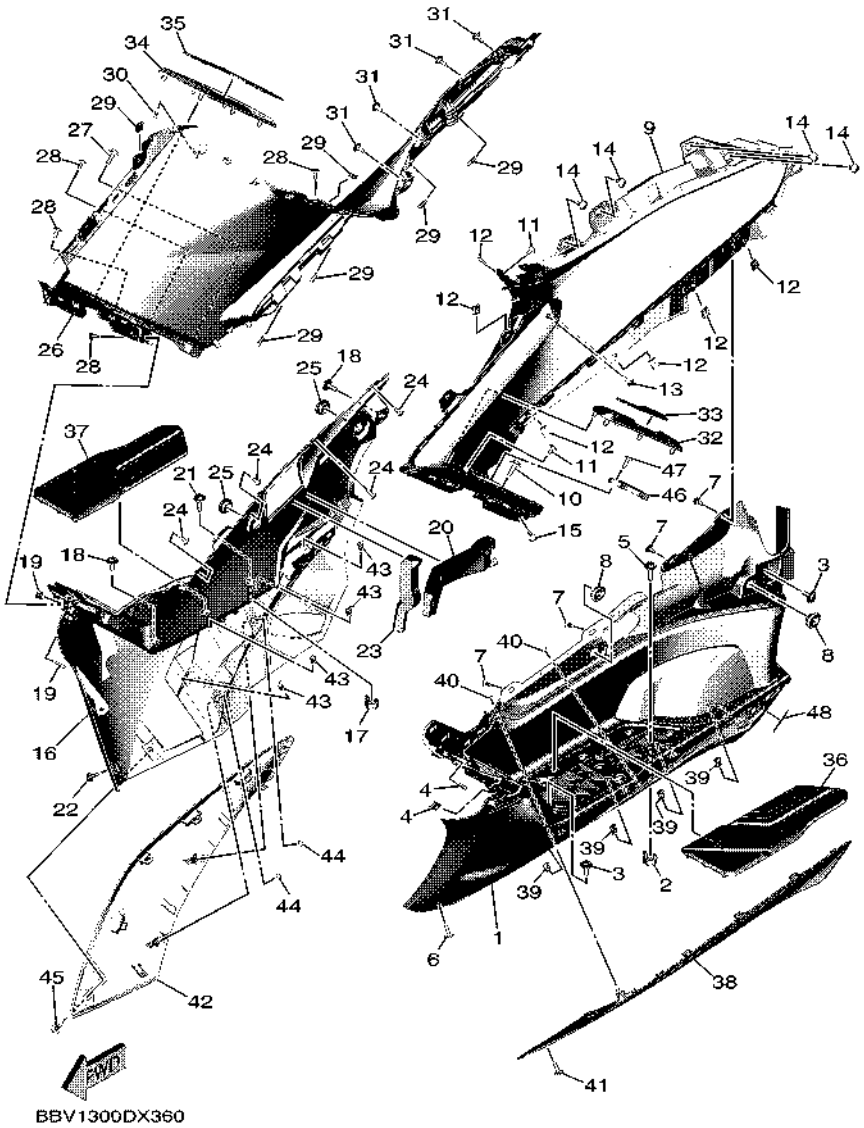

FIG. 37 STAND & FOOTREST 2

REF. NO.	PART NO.	DESCRIPTION	BYF1					REMARKS
1	BBW–27481–00	BOARD, FOOTREST	1					
2	BBW–27823–00	SPACER	1					
3	90119–06096	BOLT, WITH WASHER	2					
4	90183–05042	NUT, SPRING	2					
5	90119–06320	BOLT, WITH WASHER	1					
6	90111–05021	BOLT, HEXAGON SOCKET BUTTON	1					
7	97702–50012	SCREW, TAPPING	4					
8	90480–01559	GROMMET	2					
9	BBW–2837L–00	PANEL, CONSOLE 1	1					
10	90119–06096	BOLT, WITH WASHER	1					
11	97702–50012	SCREW, TAPPING	2					
12	90183–05042	NUT, SPRING	6					
13	90167–05079	SCREW, TAPPING	1					
14	90109–05022	BOLT	4					
15	97702–50016	SCREW,TAPPING	1					
16	BBW–27488–00	BOARD, FOOTREST 2	1					
17	BBW–27823–00	SPACER	1					
18	90119–06096	BOLT, WITH WASHER	2					
19	90183–05042	NUT, SPRING	2					
20	90520–20018	DAMPER, PLATE	1					
21	90119–06320	BOLT, WITH WASHER	1					
22	90111–05021	BOLT, HEXAGON SOCKET BUTTON	1					
23	90520–20019	DAMPER, PLATE	1					
24	97702–50012	SCREW, TAPPING	4					
25	90480–01559	GROMMET	2					
26	BBW–2837M–00	PANEL, CONSOLE 2	1					
27	90119–06096	BOLT, WITH WASHER	1					

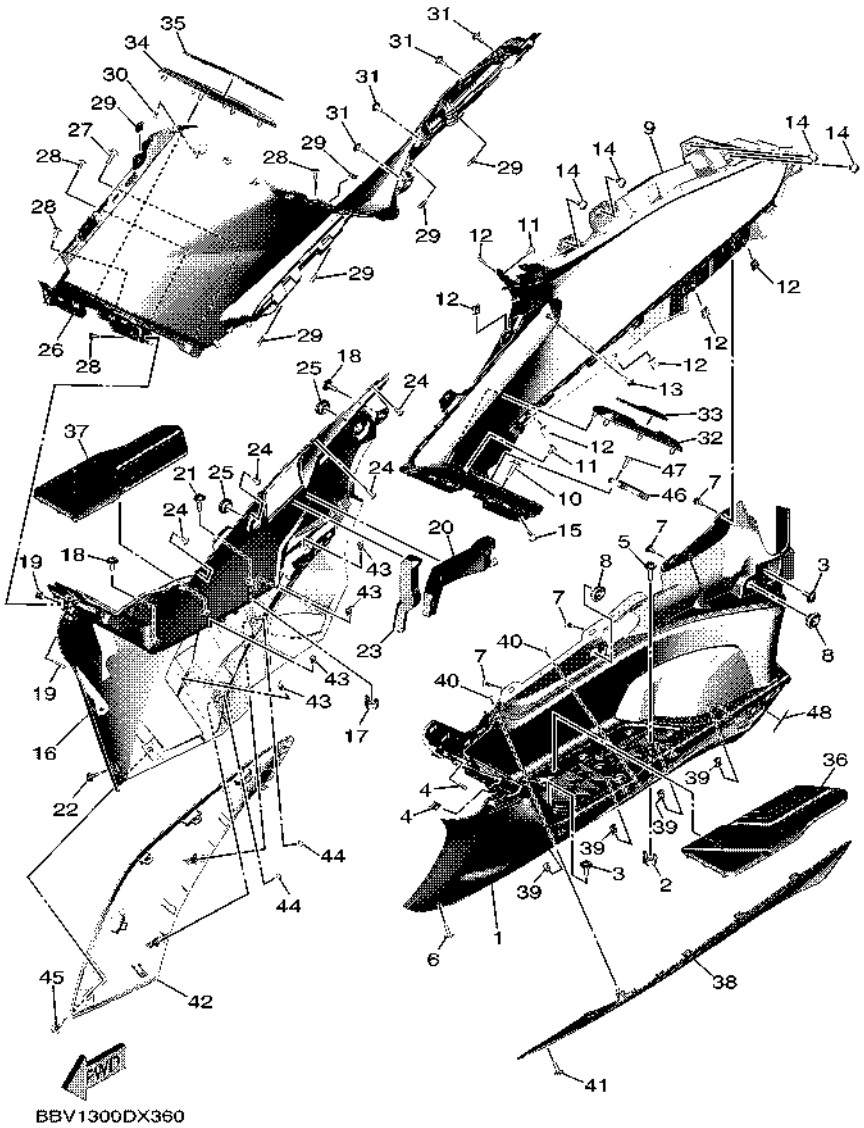

FIG. 37 STAND & FOOTREST 2

REF. NO.	PART NO.	DESCRIPTION	BYF1					REMARKS
28	97702–50012	SCREW, TAPPING	4					
29	90183–05042	NUT, SPRING	6					
30	90167–05079	SCREW, TAPPING	1					
31	90109–05022	BOLT	4					
32	BBW–27483–00	MAT 1	1					
33	BBW–27413–00	COVER, FOOTREST	1					
34	BBW–27484–00	MAT 2	1					
35	BBW–27423–00	COVER, FOOTREST	1					
36	BBW–27493–00	MAT 3	1					
37	BBW–27494–00	MAT 4	1					
38	BBW–2171L–00–P7	MOLE, SIDE COVER 1	1					UR FOR BNC2
	BBW–2171L–00–P5	MOLE, SIDE COVER 1	1					UR FOR MDRNP1
39	90464–04005	CLAMP	4					
40	90183–05M02	NUT, SPRING	2					
41	90111–05021	BOLT, HEXAGON SOCKET BUTTON	1					
42	BBW–2171M–00–P7	MOLE, SIDE COVER 2	1					UR FOR BNC2
	BBW–2171M–00–P5	MOLE, SIDE COVER 2	1					UR FOR MDRNP1
43	90464–04005	CLAMP	4					
44	90183–05M02	NUT, SPRING	2					
45	90111–05021	BOLT, HEXAGON SOCKET BUTTON	1					
46	59C–27463–01	COVER 2	1					
47	97702–50016	SCREW,TAPPING	1					
48	B5Y–1548B–00	OIL, LABEL	1					

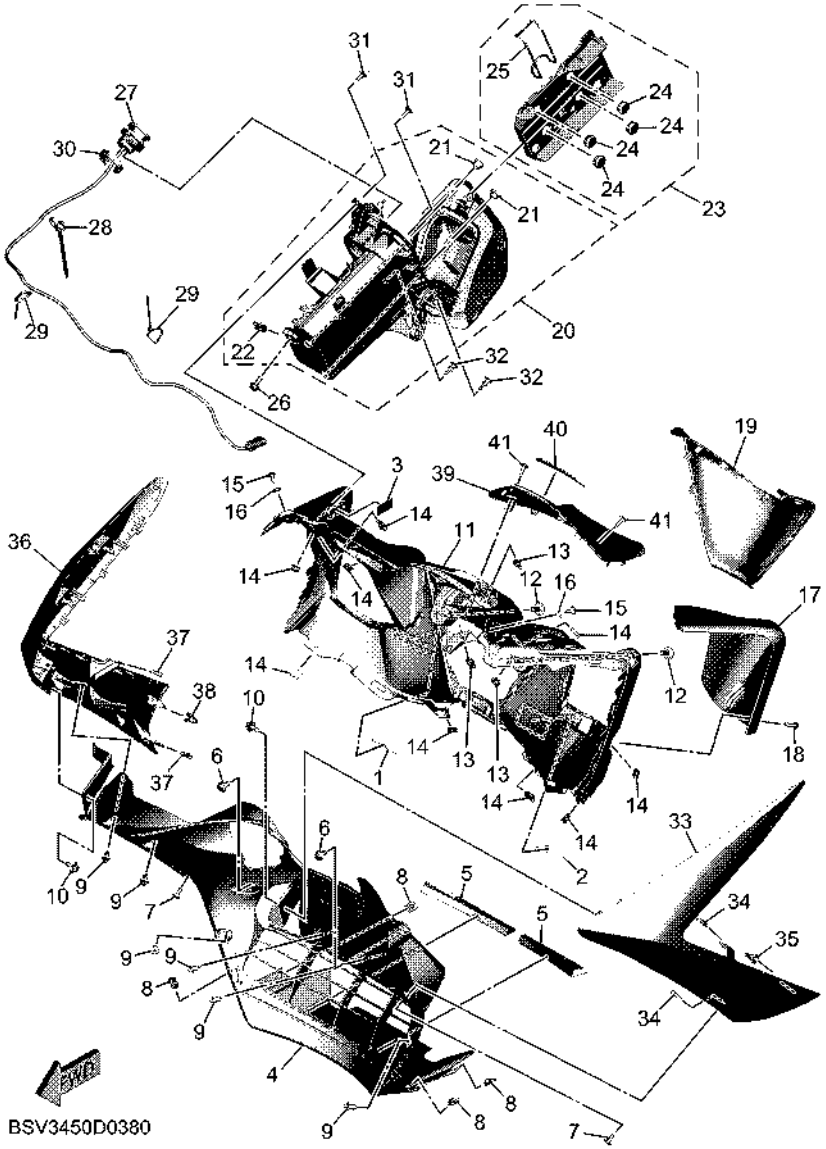

FIG. 38 LEG SHIELD

REF. NO.	PART NO.	DESCRIPTION	BYF1					REMARKS
1	2S3–2817K–11	LABEL, FUEL	1					
2	26P–21568–11	LABEL, WARNING	1					
3	4BR–24877–A1	LABEL, CAUTION	1					
4	BSW–21557–00	DUCT, AIR	1					
5	90520–10015	DAMPER, PLATE	2					
6	90109–06264	BOLT	2					
7	90167–05079	SCREW, TAPPING	2					
8	90183–05076	NUT, SPRING	4					
9	90269–06008	RIVET	6					
10	90269–06083	RIVET	2					
11	BBW–28311–00	LEG SHIELD 1	1					
12	90159–06021	SCREW, WITH WASHER	2					
13	90183–05076	NUT, SPRING	3					
14	90183–05042	NUT, SPRING	9					
15	97702–50012	SCREW, TAPPING	2					
16	90201–05045	WASHER, PLATE	2					
17	BBW–28313–00	LID	1					
18	90169–05001	SCREW, TRUSS HEAD TAPPING	1					
19	BBW–28312–00–P4	LEG SHIELD 2	1					UR MBL2 FOR BNC2
	BBW–28312–00–P5	LEG SHIELD 2	1					UR SMX FOR MDRNP1
20	BBW–2830R–00	BOX SUB ASSY	1					
21	90338–10132	.PLUG	2					
22	90183–060A6	.NUT, SPRING	1					
23	BBW–283J3–00	SMART PHONE HOLDER ASSY.	1					
24	90480–14100	.GROMMET	4					
25	93210–60426	.O-RING	1					
26	90159–06022	SCREW, WITH WASHER	1					

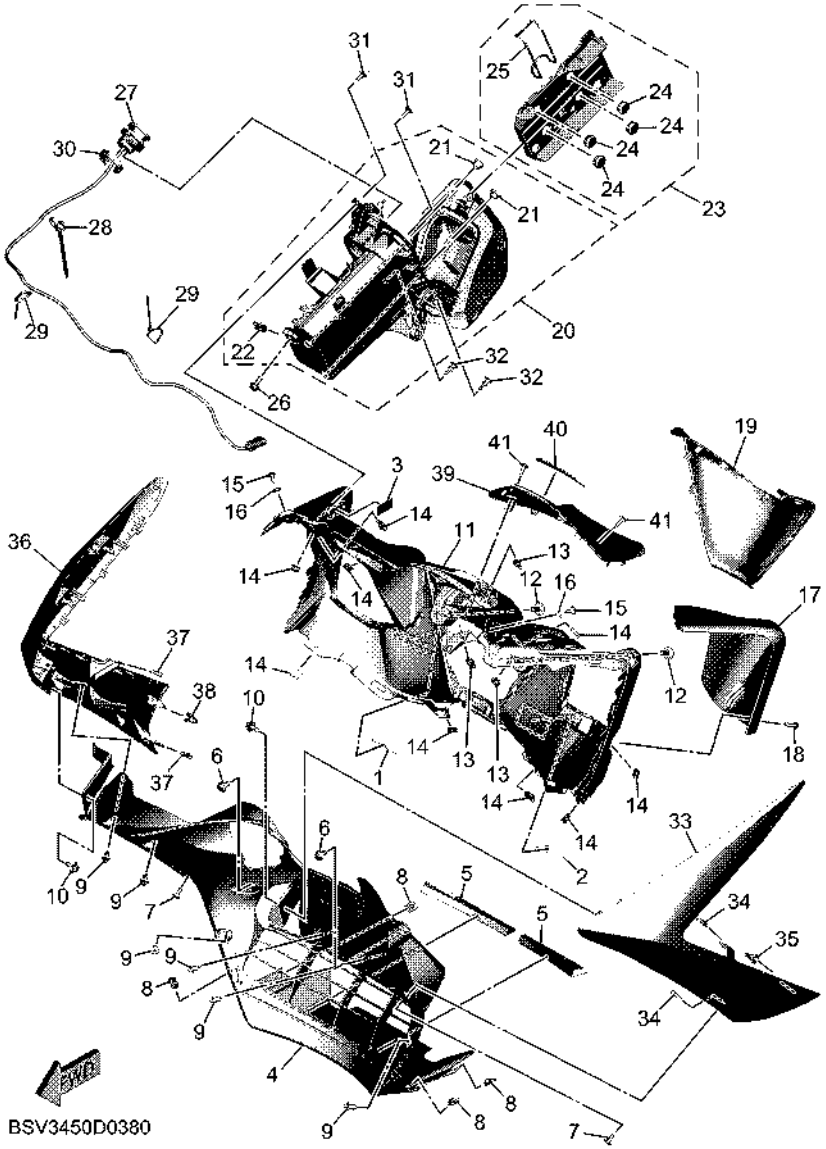

FIG. 38 LEG SHIELD

REF. NO.	PART NO.	DESCRIPTION	BYF1					REMARKS
27	BBW–821F1–00	LEAD, USB 1	1					
28	90464–30010	CLAMP	1					
29	90464–16061	CLAMP	2					
30	BBW–82114–00	NUT	1					
31	97702–50012	SCREW, TAPPING	2					
32	90269–06008	RIVET	2					
33	BSW–2835U–00–P0	PANEL 1	1					UR MBL2 FOR BNC2
	BSW–2835U–00–P1	PANEL 1	1					UR SMX FOR MDRNP1
34	90183–05042	NUT, SPRING	2					
35	90464–07018	CLAMP	1					
36	BSW–2835V–00–P0	PANEL 2	1					UR MBL2 FOR BNC2
	BSW–2835V–00–P1	PANEL 2	1					UR SMX FOR MDRNP1
37	90183–05042	NUT, SPRING	2					
38	90464–07018	CLAMP	1					
39	BBW–28365–00	COVER	1					
40	BBW–26031–00	EMBLEM, 3D	1					
41	90167–05079	SCREW, TAPPING	2					

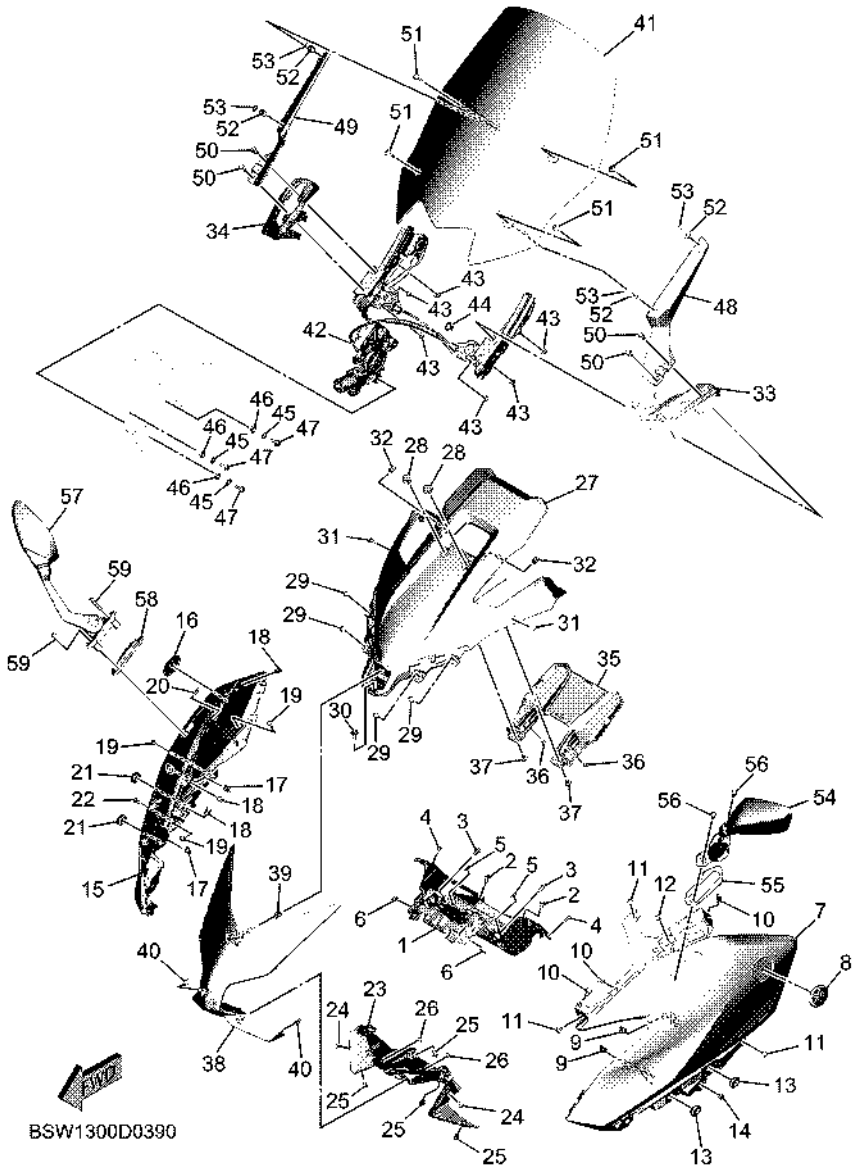

FIG. 39 WINDSHIELD

REF. NO.	PART NO.	DESCRIPTION	BYF1					REMARKS
1	BSW–2836K–00	PANEL, INNER 1	1					
2	90269–06008	RIVET	2					
3	90269–07014	RIVET	2					
4	97702–50012	SCREW, TAPPING	2					
5	1HX–27415–00	PLATE, DAMPER	2					
6	90183–05042	NUT, SPRING	2					
7	BSW–28351–00–P2	COWLING	1					UR FOR BNC2
	BSW–28351–00–P3	COWLING	1					UR FOR MDRNP1
8	1RC–2413B–02	EMBLEM	1					
9	90183–060A6	NUT, SPRING	2					
10	90183–05042	NUT, SPRING	3					
11	97702–50012	SCREW, TAPPING	3					
12	90183–05076	NUT, SPRING	1					
13	90480–01559	GROMMET	2					
14	90269–06008	RIVET	1					
15	BSW–28377–00–P2	COWLING	1					UR FOR BNC2
	BSW–28377–00–P3	COWLING	1					UR FOR MDRNP1
16	1RC–2413B–02	EMBLEM	1					
17	90183–060A6	NUT, SPRING	2					
18	90183–05042	NUT, SPRING	3					
19	97702–50012	SCREW, TAPPING	3					
20	90183–05076	NUT, SPRING	1					
21	90480–01559	GROMMET	2					
22	90269–06008	RIVET	1					
23	BSW–22863–00	COVER, UNDER	1					
24	97702–50012	SCREW, TAPPING	2					
25	90269–06008	RIVET	4					

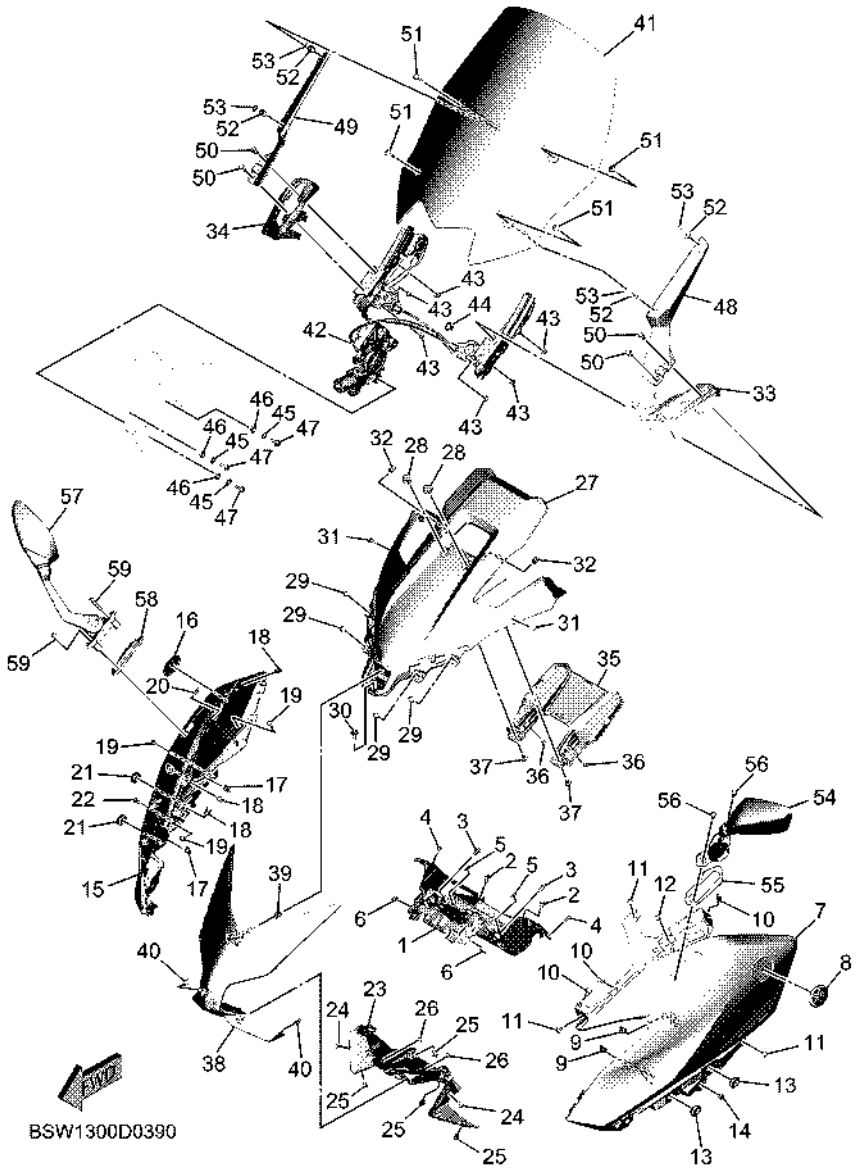

FIG. 39 WINDSHIELD

REF. NO.	PART NO.	DESCRIPTION	BYF1					REMARKS
26	90183–05M02	NUT, SPRING	2					
27	BSW–2836L–00	PANEL, INNER 2	1					
28	90269–08005	RIVET	2					
29	97702–50012	SCREW, TAPPING	4					
30	90110–06437	BOLT, HEXAGON SOCKET HEAD	1					
31	B7M–28331–00	BOLT, LEG SHIELD	2					
32	90183–05076	NUT, SPRING	2					
33	BSW–21521–00	FLAP, FRONT FENDER	1					
34	BSW–21561–00	FLAP 2	1					
35	BSW–83559–00	COVER, METER	1					
36	90338–06018	PLUG	2					
37	90111–05002	BOLT, HEXAGON SOCKET BUTTON	2					
38	BSW–22865–00–P2	COVER, FRONT	1					UR FOR BNC2
	BSW–22865–00–P3	COVER, FRONT	1					UR FOR MDRNP1
39	90464–07018	CLAMP	1					
40	90183–05042	NUT, SPRING	2					
41	BBW–2837U–00	SCREEN	1					
42	BBW–83306–00	DRIVE UNIT ASSY	1					
43	95702–06500	NUT, FLANGE	6					
44	90464–12001	CLAMP	1					
45	90201–06032	WASHER, PLATE	3					
46	90387–07006	COLLAR	3					
47	95D37–06016	BOLT, FLANGE DEEP RECESS	3					
48	BBW–2833C–00	LINK 1	1					
49	BBW–2833D–00	LINK 2	1					
50	95D32–06014	BOLT, FLANGE DEEP RECESS	4					
51	90111–05065	BOLT, HEXAGON SOCKET BUTTON	4					

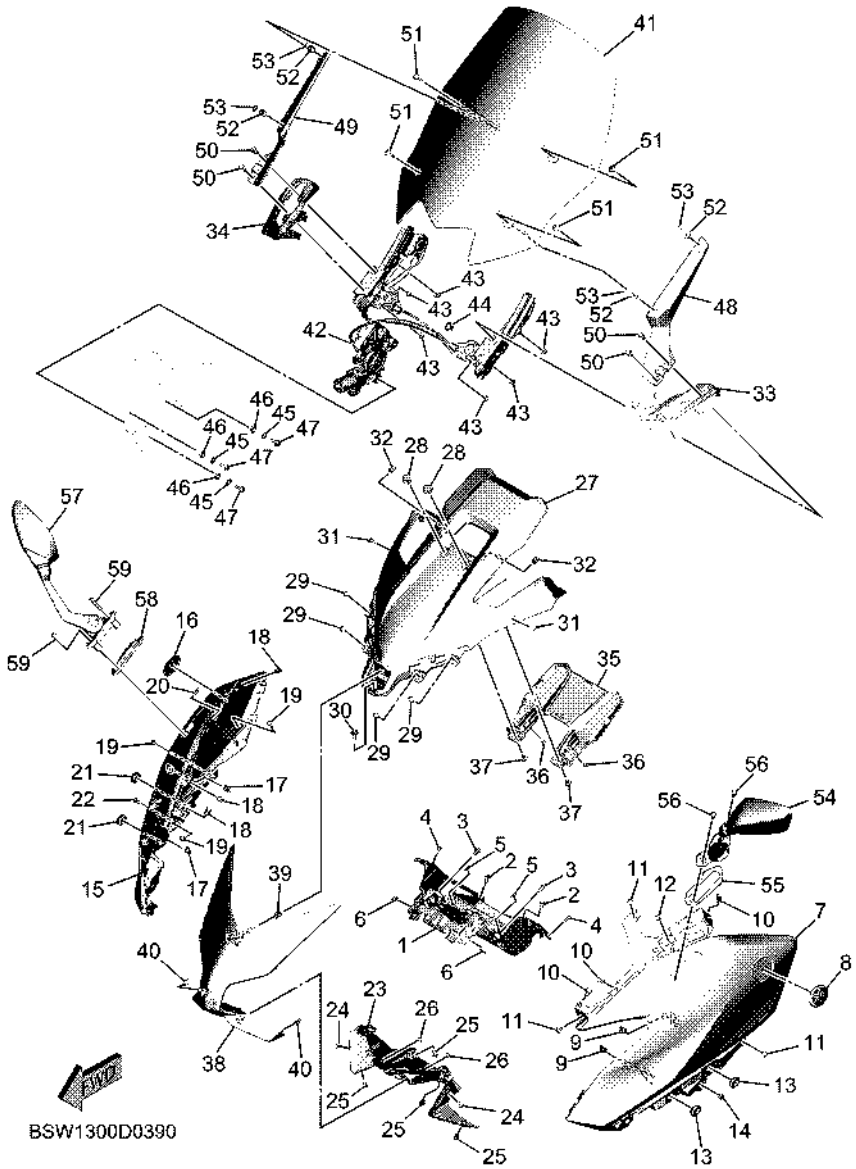

FIG. 39 WINDSHIELD

REF. NO.	PART NO.	DESCRIPTION	BYF1					REMARKS
52	90179–05003	NUT	4					
53	90202–05224	WASHER, PLATE	4					
54	BSW–F6280–00	REAR VIEW MIRROR ASSY (LEFT)	1					
55	BSW–2628N–00	BASE, MIRROR (LEFT)	1					
56	92014–06030	BOLT, BUTTON HEAD	2					
57	BSW–F6290–00	REAR VIEW MIRROR ASSY (RIGHT)	1					
58	BSW–2628R–00	BASE, MIRROR (RIGHT)	1					
59	92014–06030	BOLT, BUTTON HEAD	2					

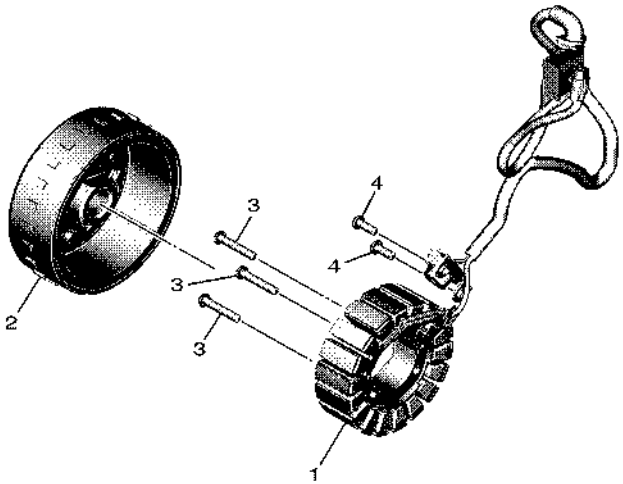

BBV1300DX390

FIG. 40 GENERATOR

REF. NO.	PART NO.	DESCRIPTION	BYF1					REMARKS
1	BBW–81410–02	STATOR ASSY	1					
2	B7M–81450–00	ROTOR ASSY	1					
3	90149–06093	SCREW	3					
4	90149–06082	SCREW	2					

FIG. 41 METER

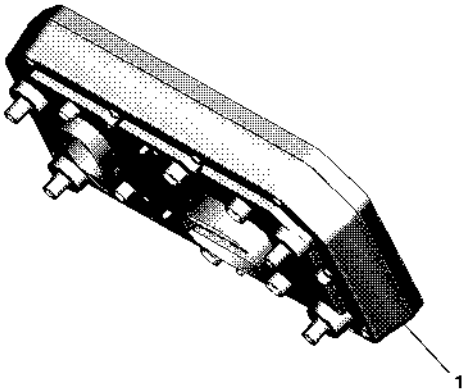

BBV1300DX400

REF. NO.	PART NO.	DESCRIPTION	BYF1					REMARKS
1	BSW–83500–00	METER ASSY	1					

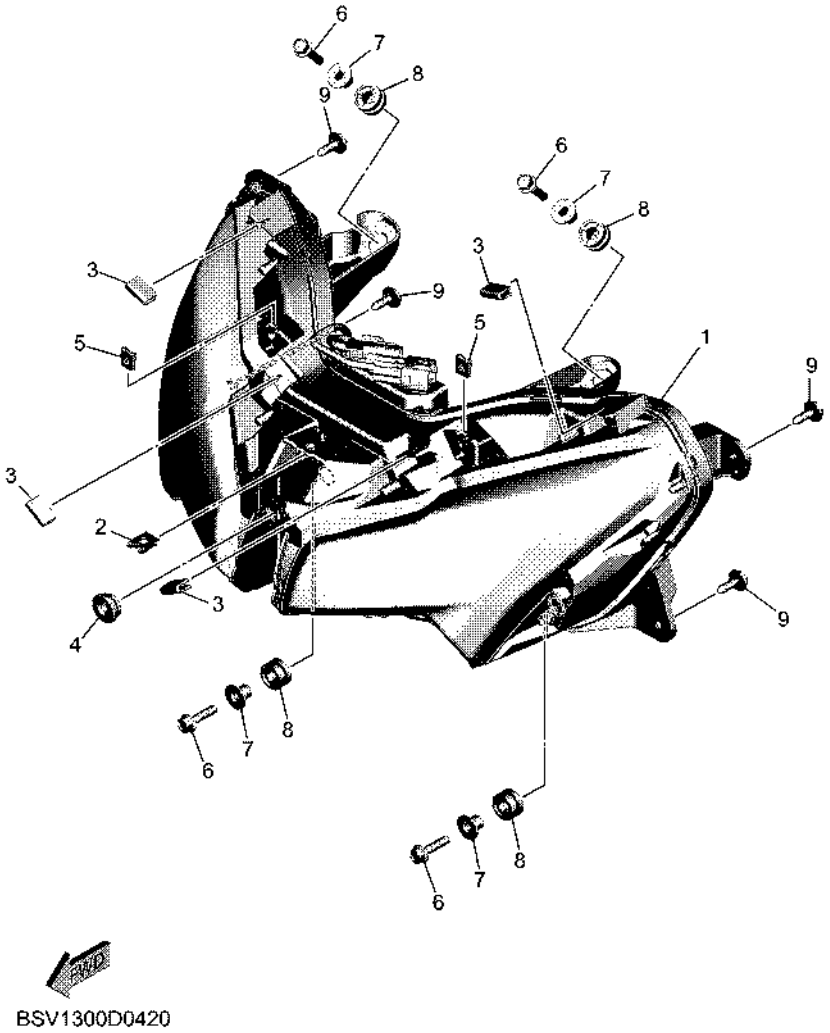

FIG. 42 HEADLIGHT

REF. NO.	PART NO.	DESCRIPTION	BYF1					REMARKS
1	BSW–84300–00	HEADLIGHT ASSY	1					
2	90183–060A6	NUT, SPRING	1					
3	BBW–24785–00	MOLE, SEAT	4					
4	90480–13398	GROMMET	1					
5	90183–05042	NUT, SPRING	2					
6	95812–06025	BOLT, FLANGE	4					
7	90387–06161	COLLAR	4					
8	5PS–83513–00	DAMPER	4					
9	90119–06156	BOLT, WITH WASHER	4					

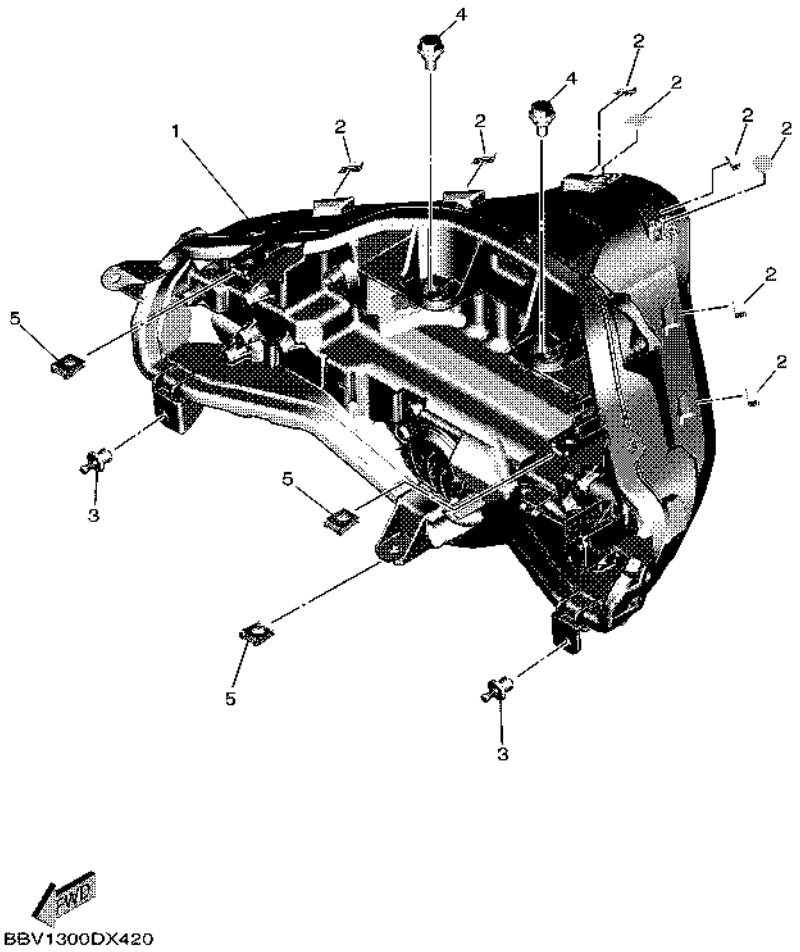

FIG. 43 TAILLIGHT

REF. NO.	PART NO.	DESCRIPTION	BYF1					REMARKS
1	BSW–84710–00	TAILLIGHT UNIT ASSY	1					
2	BBW–21669–00	SEAL	8					
3	90269–06008	RIVET	2					
4	90109–06212	BOLT	2					
5	90183–05042	NUT, SPRING	3					

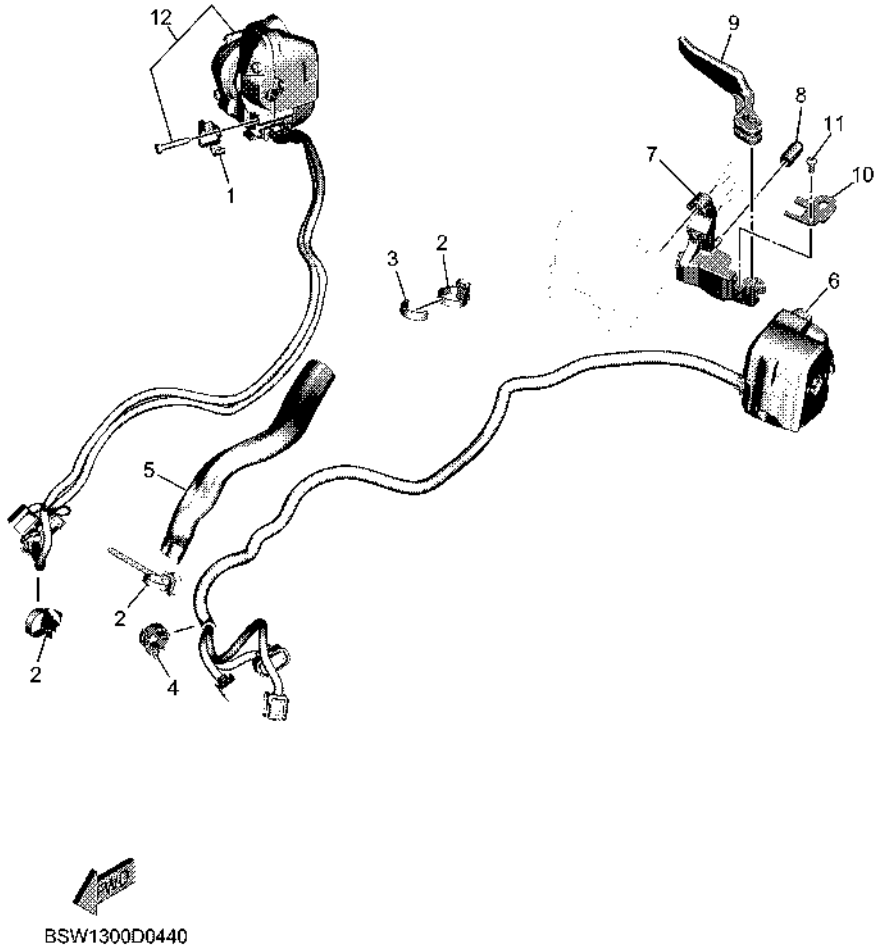

FIG. 44 HANDLE SWITCH & LEVER

REF. NO.	PART NO.	DESCRIPTION	BYF1					REMARKS
1	BBW–82361–00	CLAMP, CORD	1					
2	90464–25009	CLAMP	3					
3	90446–08002	HOSE	1					
4	90464–18246	CLAMP	1					
5	BMH–2622K–00	PROTECTOR 1	1					
6	BBW–83959–00	SWITCH, HANDLE6	1					
7	BBW–26396–00	HOLDER, ADJUSTING	1					
8	5RB–13569–00	PLUG, BLIND	1					
9	5VU–83930–00	LEVER LOCK ASSY	1					
10	BC3–25727–00	BRACKET, LEVER	1					
11	98507–05012	SCREW, PAN HEAD	1					
12	BBW–8291R–00	SW., HANDLE RH	1					

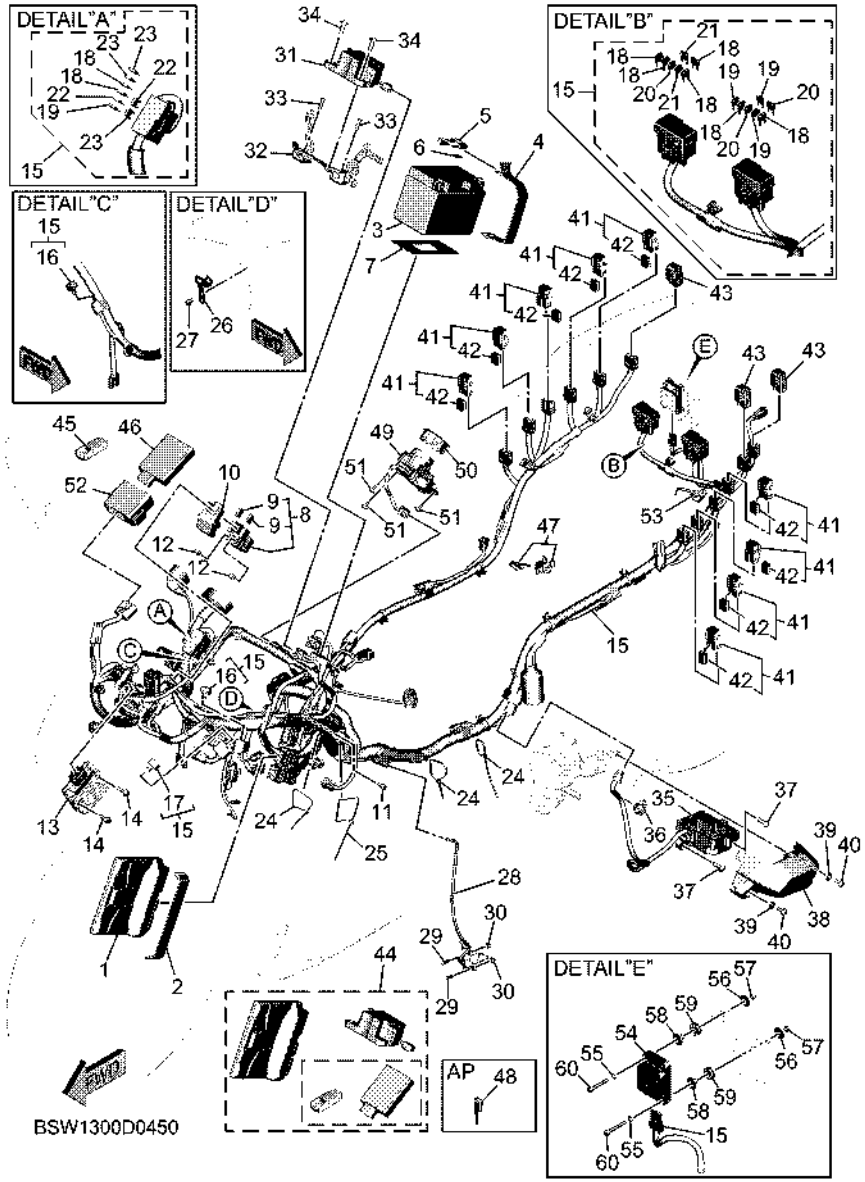

FIG. 45 ELECTRICAL 1

REF. NO.	PART NO.	DESCRIPTION	BYF1					REMARKS
1	BSW–8591A–20	ENGINE CONTROL UNIT ASSY	1					
2	137–82131–01	BAND, BATTERY	1					
3	23P–82100–02	BATTERY ASSY (GS YUASA YTZ12S)	1					
4	26H–82131–00	BAND, BATTERY	1					
5	BBW–82128–00	BRACKET, BATTERY	1					
6	BBW–21639–00	DAMPER 2	1					
7	BC3–82121–00	PAD, BATTERY	1					
8	BC3–81940–00	STARTER RELAY ASSY	1					
9	5EA–82151–00	.FUSE (40A-BL)	2					
10	5SL–82119–10	COVER, LEAD WIRE	1					
11	91380–06012	BOLT	1					
12	90105–06230	BOLT, FLANGE	2					
13	BBW–81960–01	RECTIFIER & REGULATOR ASSY	1					
14	95D32–06020	BOLT, FLANGE DEEP RECESS	2					
15	BSW–82590–00	WIRE HARNESS ASSY	1					
16	4WA–81980–00	.DIODE ASSY	2					
17	3WP–81980–00	.DIODE ASSY	1					
18	5JJ–82151–00	.FUSE (7.5A-BL)	8					
19	5JJ–82151–10	.FUSE (15A-BL)	4					
20	5JJ–82151–30	.FUSE (10A-BL)	3					
21	5JJ–82151–20	.FUSE (20A-BL)	2					
22	5JJ–82151–60	.FUSE (30A-BL)	2					
23	5JJ–82151–80	.FUSE (2A-BL)	3					
24	1UA–82591–00	BAND	3					
25	3MA–82591–00	BAND	1					
26	B7M–1244F–00	BRACKET 2	1					
27	95E32–06012	BOLT, FLANGE DEEP RECESS	1					

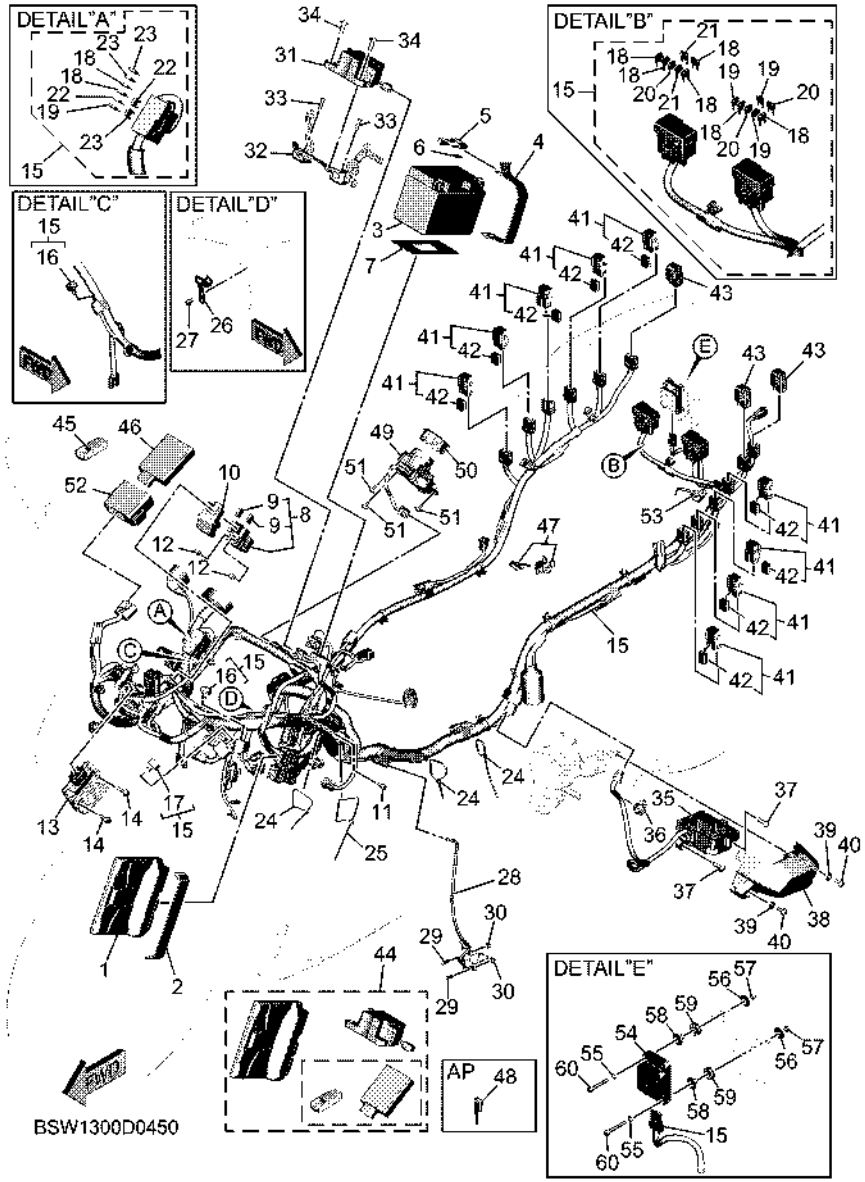

FIG. 45 ELECTRICAL 1

REF. NO.	PART NO.	DESCRIPTION	BYF1					REMARKS
28	BC3–82566–01	SWITCH, SIDE STAND	1					
29	92012–05020	BOLT, BUTTON HEAD	2					
30	95602–05200	NUT, SELF-LOCKING	2					
31	BBW–23480–00	STEERING LOCK ASSY	1					
32	BBW–2137F–00	STAY 1	1					
33	90109–06282	BOLT	2					
34	90109–08196	BOLT	2					
35	BC3–27180–01	LOCK ASSY	1					
36	90464–18246	CLAMP	1					
37	90109–08196	BOLT	2					
38	BC3–8252U–00	COVER	1					
39	90387–06130	COLLAR	2					
40	90111–06059	BOLT, HEXAGON SOCKET BUTTON	2					
41	1ST–81950–00	RELAY ASSY (1ST-00)	9					
42	5JJ–81952–00	.HOLDER, RELAY	1					
43	5JJ–81950–11	RELAY ASSY (G8HN-1C4T-DJ-Y51)	3					
44	BSW–W862A–50	REMOTE CONTROL UNIT KIT	1					
45	BMM–86261–00	XMTR. COMP.	1					
46	BSW–86265–00	RECEIVER COMPLETE	1					
47	2DF–82021–00	KEY SET	1					
48	2DF–82511–09	BLANK KEY	1					AP
49	BBW–8259E–00	SWITCH ASSY	1					
50	BBW–2845W–00	CAP,1	1					
51	90111–05058	BOLT, HEXAGON SOCKET BUTTON	3					
52	2PW–85546–00	BAND	1					
53	90464–25010	CLAMP	1					
54	BSW–8593A–00	INERTIAL MEASURE, UNIT ASSY	1					

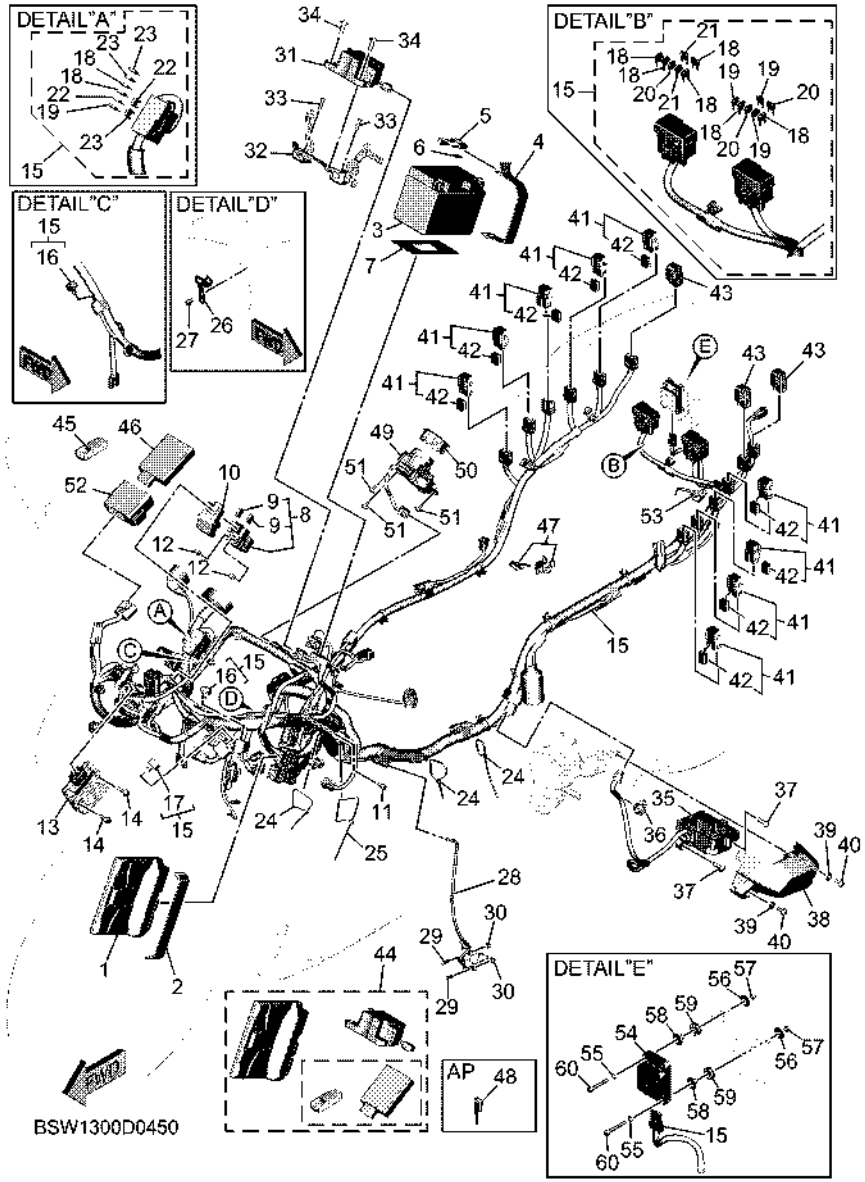

FIG. 45 ELECTRICAL 1

REF. NO.	PART NO.	DESCRIPTION	BYF1					REMARKS
55	92902–04600	WASHER, PLATE	4					
56	90201–04034	WASHER, PLATE	4					
57	95607–04100	NUT, U	4					
58	B7N–83522–00	COLLAR	4					
59	B7N–8A8D0–00	GROMMET	4					
60	91317–04030	BOLT, HEXAGON SOCKET HEAD	4					

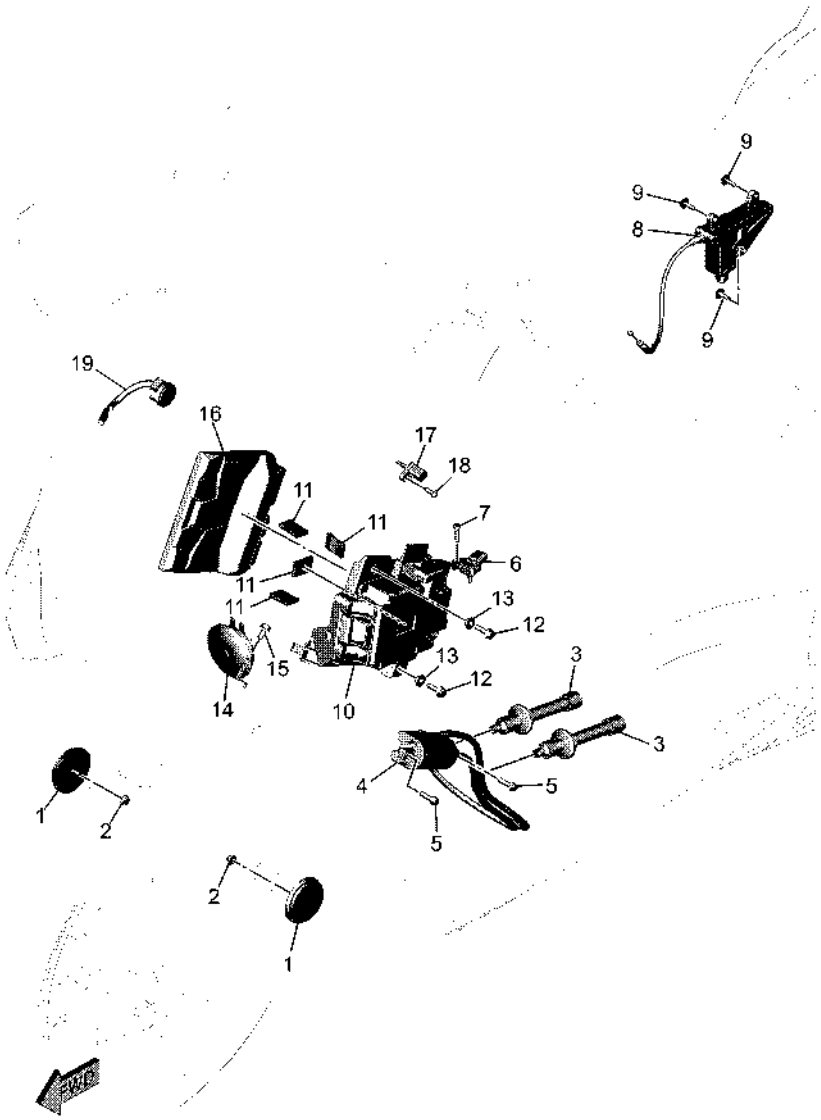

BSV1300D0460

FIG. 46 ELECTRICAL 2

REF. NO.	PART NO.	DESCRIPTION	BYF1					REMARKS
1	59C–85131–00	REFLECTOR, REAR 1	2					
2	95702–05500	NUT, FLANGE	2					
3	B7M–82370–00	PLUG CAP ASSY	2					
4	BBW–82310–00	IGNITION COIL ASSY	1					
5	95E32–06020	BOLT, FLANGE DEEP RECESS	2					
6	1WS–82380–00	SENSOR, PRESSURE	1					
7	91312–05020	BOLT, HEXAGON SOCKET HEAD	1					
8	BBW–8A310–00	MOTOR UNIT	1					
9	90149–05299	SCREW	3					
10	BSW–8252U–00	COVER	1					
11	18A–21778–00	DAMPER, LOCATING 1	4					
12	95827–06020	BOLT, FLANGE	2					
13	90387–06107	COLLAR	2					
14	BC3–83371–11	HORN	1					
15	95D32–06012	BOLT, FLANGE DEEP RECESS	1					
16	BSW–83210–00	COMMUNICATION CONTROL UNIT	1					
17	5YU–85886–00	SENSOR, AIR TEMPERATURE	1					
18	97702–50516	SCREW, TAPPING	1					
19	BSW–83383–00	BUZZER	1					

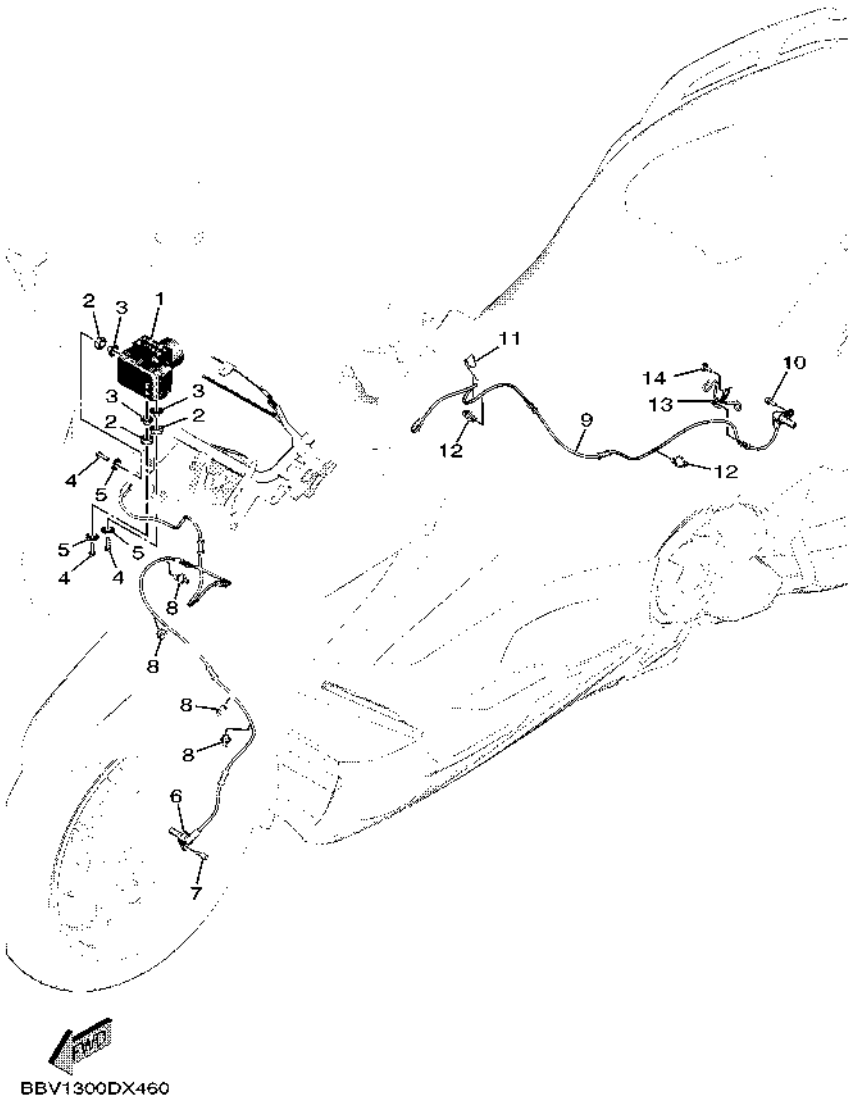

FIG. 47 ELECTRICAL 3

REF. NO.	PART NO.	DESCRIPTION	BYF1					REMARKS
1	BSW–85930–07	HYDRAULIC UNIT ASSY	1					
2	90480–15018	GROMMET	3					
3	90387–06150	COLLAR	3					
4	90105–06771	BOLT, FLANGE	3					
5	90201–06036	WASHER, PLATE	3					
6	BBW–85970–00	WHEEL SENSOR ASSY, FRONT	1					
7	95E32–06014	BOLT, FLANGE DEEP RECESS	1					
8	90464–12013	CLAMP	4					
9	BBW–85980–00	WHEEL SENSOR ASSY, REAR	1					
10	95E32–06014	BOLT, FLANGE DEEP RECESS	1					
11	90465–10098	CLAMP	1					
12	90464–14003	CLAMP	2					
13	BBW–8431U–00	HOLDER	1					
14	95D32–06012	BOLT, FLANGE DEEP RECESS	1					

PART NO.	REF. NO.
B7M–11101–09	3 – 1
5NL–11133–10	3 – 2
B7M–11166–00	10 – 11
B7M–11181–00	3 – 16
B7M–11190–01	3 – 17
B7M–11193–00	3 – 18
214–11198–01	13 – 8
B7M–11310–09	3 – 20
59C–11312–00	4 – 18
59C–11351–01	3 – 21
B7M–11400–01	4 – 1
BBW–11416–01	4 – 10
BBW–11416–11	4 – 10
BBW–11416–21	4 – 10
BBW–11416–31	4 – 10
BBW–11416–41	4 – 10
BBW–11416–A1	4 – 10
5GJ–11455–10	4 – 16
BBW–11478–00	4 – 22
B7M–11603–01	4 – 12
B7M–11631–00	4 – 11
B7M–11633–00	4 – 13
BC3–11642–01–A0	4 – 15
B7M–11650–00	4 – 2
5VU–11654–00	4 – 3
4X7–11654–01	4 – 7
BBW–11656–00	4 – 5
	4 – 9
BBW–11656–10	4 – 5
	4 – 9
BBW–11656–20	4 – 5
	4 – 9
BBW–11656–30	4 – 5
	4 – 9
59C–11660–10	4 – 6
B7M–12111–00	5 – 1
59C–12113–00	5 – 4
3TJ–12117–00	5 – 5
1HX–12118–00	5 – 6
4TV–12119–00	5 – 7
59C–12121–01	5 – 2
8GC–12126–00	5 – 3
B7M–12153–09	5 – 9
B7M–12153–10	5 – 9
1HX–12168–00	5 – 8
1HX–12168–20	5 – 8
1HX–12168–40	5 – 8
1HX–12168–60	5 – 8

PART NO.	REF. NO.
1HX–12168–80	5 – 8
1HX–12168–A0	5 – 8
1HX–12168–F0	5 – 8
1HX–12168–H1	5 – 8
1HX–12168–K1	5 – 8
1HX–12168–M1	5 – 8
1HX–12168–R1	5 – 8
1HX–12168–U1	5 – 8
1HX–12168–W1	5 – 8
1HX–12168–Y1	5 – 8
1HX–12169–11	5 – 8
1HX–12169–31	5 – 8
1HX–12169–50	5 – 8
1HX–12169–70	5 – 8
1HX–12169–90	5 – 8
1HX–12169–E0	5 – 8
1HX–12169–G0	5 – 8
1HX–12169–J0	5 – 8
1HX–12169–L0	5 – 8
1HX–12169–N0	5 – 8
1HX–12169–T0	5 – 8
B7M–12170–00	6 – 1
B7M–12180–00	6 – 2
B7M–12210–01	6 – 4
15B–12213–00	6 – 5
59C–12251–00	6 – 7
B7M–12252–00	6 – 8
BBW–12405–00	8 – 8
1WS–12410–01	8 – 2
B7M–12413–00	8 – 3
59C–12420–10	7 – 1
5VU–12421–00	7 – 2
5GJ–12422–02	7 – 7
59C–12437–00	7 – 13
5VK–12438–00	7 – 5
1WG–12439–00	7 – 8
B7M–1243A–00	8 – 22
B7M–1243E–00	8 – 23
B7M–1244F–00	45 – 26
20S–12450–00	7 – 6
BBW–12461–00	8 – 6
5SL–12462–01	8 – 19
BC3–12476–00	8 – 16
BBW–12477–00	8 – 17
5VU–12478–00	8 – 7
B7M–12481–00	7 – 14
B7M–12482–00	7 – 15
B7M–12483–00	8 – 5

PART NO.	REF. NO.
BBW–12551–00	8 – 27
BC3–12589–00	8 – 26
5GJ–12591–00	8 – 20
5SL–12671–00	8 – 10
2S3–12675–00	8 – 9
BBW–12858–00	9 – 19
3LD–13113–00	9 – 14
5GJ–13161–00	9 – 3
59C–13300–01	9 – 1
BBW–13405–00	9 – 8
5GJ–13410–00	9 – 10
22F–13411–01	9 – 13
5GH–13440–90	1 – 2
	9 – 20
BBW–13455–00	13 – 12
B7M–13470–00	9 – 17
1XD–13475–00	9 – 18
5GJ–13475–00	9 – 6
4G0–13490–01	9 – 21
B7M–13542–00	11 – 14
8FP–13556–00	11 – 2
5RB–13569–00	44 – 8
8GL–13571–00	11 – 7
8HG–13573–00	11 – 6
BBW–13588–00	4 – 21
B7M–13635–00	11 – 17
B7M–13750–04	11 – 1
BBW–13758–00	27 – 46
1WS–13761–00	11 – 3
BBW–13907–00	27 – 14
B7M–13938–00	11 – 5
BBW–13971–00	27 – 41
2C0–14105–00	11 – 11
8A7–14139–00	11 – 13
5PS–14147–00	11 – 4
895–14169–00	11 – 12
8CC–14216–10	11 – 10
B7M–14409–00	10 – 18
B7M–14411–01	10 – 1
B7M–14412–01	10 – 2
BSW–1441A–00	10 – 5
B7M–14435–00	11 – 15
BC3–14437–01	10 – 8
BC3–1443A–01	10 – 9
5XT–1443E–00	10 – 13
B7M–14451–01	1 – 3
	10 – 10
48U–14452–00	15 – 24

PART NO.	REF. NO.
B7M–14452–00	10 – 3
B7M–14465–00	27 – 43
BSW–14469–00	10 – 6
BSW–1446C–00	10 – 7
8HG–14534–00	11 – 8
4BR–14613–00	12 – 24
BC3–14629–00	12 – 10
B7M–14648–00	12 – 22
B7M–1465T–10	12 – 2
BSW–14703–00	12 – 1
BC3–14718–00	12 – 12
BSW–14738–00	12 – 31
B7M–1475P–00	12 – 32
B7M–1476P–00	12 – 33
B7M–14799–00	12 – 7
B7M–15100–08	13 – 1
5GJ–15113–01	15 – 8
BBW–15189–00	13 – 10
36Y–15189–01	14 – 9
15B–15191–01	15 – 6
BC3–15316–00	14 – 19
59C–15326–11	15 – 25
BC3–15335–00	14 – 20
2H7–15361–00	14 – 2
5GJ–15363–10	14 – 14
4XM–15383–00	18 – 11
5GJ–15383–00	18 – 29
BBW–15407–00	1 – 4
	15 – 1
59C–15408–00	1 – 5
	15 – 23
BBW–15411–00	14 – 1
59C–15414–00	14 – 3
BC3–15415–01	14 – 16
BBW–15417–00	14 – 4
59C–15421–10	15 – 10
BC3–15423–01	15 – 21
5GJ–1542A–00	15 – 19
BC3–1542B–00	15 – 26
59C–15431–00	15 – 7
BC3–1543A–01	15 – 29
B7M–15451–00	14 – 11
5GJ–15453–01	14 – 6
59C–15461–01	1 – 7
	2 – 5
	15 – 11
BBW–15473–00	15 – 3
5GJ–15474–00	15 – 5

PART NO.	REF. NO.
15B–15481–00	13 – 7
2PW–15481–01	14 – 18
	15 – 20
	15 – 27
	15 – 31
5GJ–15486–00	14 – 17
B5Y–1548B–00	37 – 48
4B5–15492–00	15 – 18
BC3–15499–00	14 – 21
	15 – 28
B7M–15512–00	16 – 1
BBW–15517–00	16 – 4
36Y–15521–01	16 – 2
1WS–15590–00	16 – 3
59C–15768–00	15 – 15
BC3–15789–00	14 – 22
	15 – 30
B7M–16110–00	17 – 1
59C–16151–00	19 – 2
BSW–16173–00	17 – 14
BSW–16321–00	17 – 11
B7M–16324–00	17 – 13
B7M–16325–00	17 – 12
5GJ–16334–00	17 – 16
B7M–16371–00	17 – 5
B7M–16511–00	17 – 7
5GJ–16520–00	17 – 9
5GJ–16529–00	17 – 18
5GJ–16533–00	17 – 10
5GJ–16537–00	17 – 17
5GJ–16537–10	17 – 17
5GJ–16537–20	17 – 17
5GJ–16537–30	17 – 17
5GJ–16540–00	17 – 8
5GJ–16550–00	17 – 15
BBW–17111–00	19 – 3
BBW–17211–00	19 – 7
59C–17411–10	19 – 1
B7M–17421–00	19 – 5
15B–17524–00	24 – 1
5GJ–17554–00	24 – 6
B7M–17601–09	18 – 1
59C–17611–00	18 – 7
BC3–17623–00	18 – 4
5VU–17632–10	2 – 2
	18 – 3
B7M–17641–10	1 – 6
	2 – 4

PART NO.	REF. NO.
B7M–17641–10	18 – 6
4WV–17644–00	18 – 21
59C–17649–01	18 – 8
B7M–17651–00	24 – 17
59C–17653–01	2 – 3
	18 – 5
59C–17660–00	18 – 14
4CW–17664–00	18 – 18
59C–17670–00	18 – 15
B7M–17681–00	18 – 24
5GJ–17690–00	18 – 20
B7M–21110–00	20 – 1
BBW–2113B–00	20 – 5
BBW–21158–00	20 – 14
BSW–2116M–00	20 – 38
BC3–2117F–01	20 – 40
BBW–2117K–00	29 – 27
BC3–2117M–01	20 – 41
BBW–21183–00	20 – 16
BBW–21185–01	20 – 10
BBW–21195–00	20 – 9
BC3–21236–00	20 – 2
5VX–21279–10	20 – 4
BSW–21345–00	27 – 20
21V–21376–00	28 – 25
BBW–2137F–00	45 – 32
BBW–21399–00	20 – 23
BV1–2141A–00	20 – 43
BBW–2141E–00	20 – 45
BV1–2142K–00	20 – 17
BC3–2144H–00	20 – 47
BC3–2145H–00	20 – 49
BC3–21481–10	20 – 6
BBW–21511–00–P6	21 – 1
BBW–21511–00–P8	21 – 1
BSW–21521–00	39 – 33
4B5–2153E–01	21 – 14
3WF–2153E–41	21 – 14
BBW–21556–00	21 – 3
BSW–21557–00	38 – 4
BSW–21561–00	39 – 34
26P–21568–11	38 – 2
BBW–2161G–00	22 – 49
BBW–21629–00	22 – 39
BBW–21639–00	45 – 6
BBW–2164F–00	22 – 46
BBW–2164G–00	22 – 47
BC3–21668–01	29 – 29

PART NO.	REF. NO.
BBW–21669–00	43 – 2
BC3–21682–00	24 – 34
BBW–21711–00–P6	22 – 7
BBW–21711–00–P8	22 – 7
BBW–2171A–00–P6	22 – 25
BBW–2171A–00–P8	22 – 25
BBW–2171E–00	22 – 1
BBW–2171L–00–P5	37 – 38
BBW–2171L–00–P7	37 – 38
BBW–2171M–00–P5	37 – 42
BBW–2171M–00–P7	37 – 42
BBW–21721–00–P6	22 – 15
BBW–21721–00–P8	22 – 15
BBW–2172G–01	22 – 13
BBW–2172H–01	22 – 22
BBW–21731–00–P0	22 – 28
BBW–21731–00–P2	22 – 28
BBW–2173B–30	22 – 54
	22 – 55
BBW–2173M–01	29 – 3
BBW–21741–00–P0	22 – 33
BBW–21741–00–P2	22 – 33
4JP–21753–00	27 – 23
BBW–2175N–00	22 – 27
18A–21778–00	46 – 11
3D8–2177M–00	27 – 12
1AA–21815–00	23 – 13
BBW–21816–00	23 – 15
BC3–21817–00	23 – 16
BBW–21871–00	23 – 9
1AA–21874–00	23 – 14
BC3–2210M–00	24 – 5
BC3–2210N–01	24 – 11
15B–22141–00	24 – 24
1J7–22143–00	24 – 26
59C–2214F–00	24 – 19
BC3–2217A–00	24 – 52
BC3–2217M–00	24 – 51
59C–2219X–00	24 – 18
BBW–22210–00	24 – 67
BC3–22311–01	24 – 40
BC3–22312–01	24 – 43
BC3–22381–01	24 – 46
BC3–22465–00	24 – 14
BC3–2247A–00	36 – 17
BC3–2248B–00	24 – 53
BC3–2248B–10	24 – 65
BC3–2248C–00	24 – 54

PART NO.	REF. NO.
BSW–22863–00	39 – 23
BSW–22865–00–P2	39 – 38
BSW–22865–00–P3	39 – 38
BC3–22882–00	24 – 66
BBW–23102–00	26 – 19
BBW–23103–00	26 – 1
BC3–23110–01	26 – 2
2PW–23111–00	26 – 16
	26 – 34
5VY–23118–00	26 – 15
	26 – 33
BC3–23120–01	26 – 20
5PB–23123–00	26 – 41
1RC–23125–00	2 – 10
	26 – 7
	26 – 25
BC3–23126–00	26 – 9
	26 – 27
B7M–23141–00	26 – 14
	26 – 32
4EB–23144–00	2 – 7
	26 – 3
	26 – 21
4EB–23145–01	2 – 9
	26 – 5
	26 – 23
36Y–23146–10	26 – 6
	26 – 24
39P–23147–00	2 – 13
	26 – 17
	26 – 35
26H–23156–00	2 – 8
	26 – 4
	26 – 22
509–23158–L0	2 – 12
	26 – 11
	26 – 29
BBW–23170–00	26 – 28
B7M–23170–10	26 – 10
4FM–23171–40	2 – 11
	26 – 8
	26 – 26
BBW–2317E–00	26 – 42
BBW–2317F–00	26 – 44
278–23181–50	26 – 12
	26 – 30
BC3–23340–00	26 – 37
BBW–2334G–00	25 – 16

PART NO.	REF. NO.
BSW–2334H–00	25 – 10
3LC–23357–00	26 – 13
	26 – 31
4XV–23415–01	2 – 18
	25 – 5
4XV–23418–00	25 – 2
BBW–23442–00	25 – 9
3FV–23462–00	2 – 16
	26 – 40
BBW–23480–00	45 – 31
BC3–23857–00	25 – 18
BBW–24110–00	27 – 1
BBW–24129–00–P2	23 – 5
BBW–24129–00–P4	23 – 5
BBW–24139–00–P2	23 – 7
BBW–24139–00–P4	23 – 7
1RC–2413B–02	39 – 8
	39 – 16
BBW–2414A–00	27 – 22
BBW–2414H–00	27 – 8
BBW–2414J–00	27 – 9
BBW–2414K–00	27 – 10
BC3–24170–00	27 – 30
22W–24181–00	12 – 17
BC3–24183–00	27 – 29
BC3–24184–00	27 – 27
31A–24188–01	27 – 13
BBW–2419A–00	27 – 40
BBW–2419F–00	27 – 28
BBW–24313–00	27 – 25
BBW–24316–00	27 – 32
BBW–24317–00	27 – 42
BC3–24318–00	27 – 24
BBW–24339–00	27 – 6
1S4–24486–00	27 – 17
BC3–24491–00	27 – 16
BBW–24610–04	27 – 2
BSW–24718–00	28 – 7
BBW–2471P–00	29 – 9
BSW–24726–00	28 – 3
BBW–24730–20	28 – 1
BBW–24731–20	28 – 2
BBW–2473R–00	29 – 1
BSW–24742–00	28 – 11
BBW–24747–00	29 – 8
BBW–2474A–00–P5	29 – 11
BBW–2474A–00–P7	29 – 11
4B5–2474E–00	28 – 4

PART NO.	REF. NO.
BBW–2474W–00–P5	29 – 16
BBW–2474W–00–P7	29 – 16
BSW–24752–00	28 – 10
BSW–24764–00	28 – 14
BBW–24765–00	23 – 1
BBW–24769–01	28 – 19
4B5–2476U–00	29 – 13
	29 – 18
BBW–24780–00	29 – 21
BBW–24785–00	42 – 3
BBW–2478G–01	28 – 22
BBW–2479D–00	29 – 24
3LD–24877–A1	29 – 31
4BR–24877–A1	38 – 3
BBW–24885–00	29 – 23
5EA–25117–00	30 – 2
BSW–25168–01	30 – 1
BSW–25170–00	30 – 11
	32 – 13
1XC–2517G–00	32 – 7
2DR–2517G–00	30 – 5
BC3–25181–00	30 – 15
5PW–25188–00	30 – 16
B5Y–25188–00	30 – 13
	32 – 15
BSW–251H4–00	30 – 12
	32 – 14
59C–25317–01	32 – 4
59C–25333–01	33 – 26
BSW–25338–01	32 – 1
BC3–25376–00	32 – 22
2PW–25377–10	32 – 23
2PW–2537A–00	32 – 21
BC3–25381–00	32 – 24
5VY–25388–00	24 – 38
5VY–25389–01	24 – 39
23P–25398–00	30 – 14
	32 – 16
BC3–25470–00	32 – 17
BC3–25727–00	44 – 10
4SV–25802–00	31 – 6
	31 – 17
59C–25802–00	33 – 4
4SV–25802–10	31 – 4
	31 – 15
59C–25802–50	33 – 14
59C–25803–00	33 – 5
3GM–25803–10	31 – 5

PART NO.	REF. NO.
3GM–25803–10	31 – 16
3MA–25803–10	31 – 7
	31 – 18
4B5–25805–00	1 – 8
	31 – 8
	31 – 19
59C–25805–50	33 – 15
59C–25806–00	1 – 9
	33 – 8
BC3–25807–00	35 – 2
BC3–25807–10	35 – 28
BC3–2580A–00	35 – 1
BC3–2580A–10	35 – 27
2PW–2580T–20	31 – 3
2PW–2580U–20	31 – 14
59C–2580W–01	33 – 3
BBW–2581T–00	31 – 1
1J3–25824–00	31 – 12
	31 – 23
5GM–25824–00	33 – 10
1D7–25825–00	33 – 11
59C–25825–00	33 – 25
306–25825–01	31 – 13
	31 – 24
59C–2582W–00	33 – 1
59C–25838–00	33 – 19
BBW–2584B–01	35 – 39
BBW–2584C–00	35 – 40
BBW–2584D–00	35 – 25
4B5–25852–00	35 – 3
	35 – 29
4B5–25854–00	35 – 5
	35 – 31
4B5–25855–00	35 – 4
	35 – 30
5VS–25867–00	35 – 11
BBW–25873–00	35 – 15
BBW–25874–01	35 – 14
BBW–25875–00	35 – 23
BBW–25876–00	35 – 26
BC3–2587A–00	24 – 36
BBW–25886–00	35 – 45
BBW–25887–00	35 – 16
5VS–2589F–00	35 – 7
	35 – 33
5VS–2589H–00	35 – 6
	35 – 32
59C–25914–00	33 – 6

PART NO.	REF. NO.
59C–25914–50	33 – 18
1UY–25917–51	33 – 20
13S–25919–00	31 – 9
	31 – 20
5JW–25919–00	33 – 9
2PW–25921–50	33 – 24
4SV–25924–00	31 – 10
	31 – 21
3GM–25925–00	31 – 11
	31 – 22
1UY–25926–51	33 – 21
4TT–25937–00	33 – 7
1UY–25937–51	33 – 23
1UY–25938–51	33 – 22
5GM–25975–00	33 – 12
2PW–259A0–00	33 – 13
59C–259A3–00	33 – 16
59C–259A4–00	33 – 17
BBW–26031–00	38 – 40
BBW–26111–00	34 – 1
BBW–2612E–00	35 – 24
BBW–2612K–00	21 – 13
4B5–26131–00	34 – 17
BBW–26143–00	34 – 8
BBW–26144–00	34 – 5
BBW–26145–00	34 – 10
BBW–26146–00	34 – 6
BMH–2622K–00	44 – 5
5EB–26246–00	34 – 4
BBW–26279–00	34 – 15
BSW–2628N–00	39 – 55
BSW–2628R–00	39 – 58
5VS–26332–00	35 – 10
	35 – 38
BBW–26396–00	44 – 7
B7M–27111–00	36 – 15
36C–27114–00	36 – 21
BC3–27114–00	36 – 32
BC3–27151–00	36 – 20
B7M–27152–00	36 – 24
BC3–27180–01	45 – 35
59C–27311–00	36 – 29
BC3–27321–00	36 – 28
BBW–27413–00	37 – 33
1HX–27415–00	39 – 5
BBW–27423–00	37 – 35
B7M–27424–00	12 – 21
36Y–27424–01	12 – 18

PART NO.	REF. NO.
B7M–27431–00	36 – 1
4B5–27437–00	36 – 7
	36 – 14
B7M–27441–00	36 – 8
59C–27463–01	37 – 46
BBW–27481–00	37 – 1
BBW–27483–00	37 – 32
BBW–27484–00	37 – 34
BBW–27488–00	37 – 16
BBW–27493–00	37 – 36
BBW–27494–00	37 – 37
BBW–27823–00	37 – 2
	37 – 17
BC3–27883–00	32 – 18
BSW–27982–00	34 – 20
BBW–28100–10	28 – 24
1RC–28135–00	28 – 26
B5Y–2815P–10	29 – 30
2S3–2817K–11	38 – 1
BBW–2830R–00	38 – 20
BBW–28311–00	38 – 11
BBW–28312–00–P4	38 – 19
BBW–28312–00–P5	38 – 19
BBW–28313–00	38 – 17
B7M–28331–00	39 – 31
BBW–2833C–00	39 – 48
BBW–2833D–00	39 – 49
BSW–28351–00–P2	39 – 7
BSW–28351–00–P3	39 – 7
BSW–28356–00	20 – 21
BSW–2835U–00–P0	38 – 33
BSW–2835U–00–P1	38 – 33
BSW–2835V–00–P0	38 – 36
BSW–2835V–00–P1	38 – 36
BBW–2835X–00	34 – 13
BBW–28365–00	38 – 39
BSW–2836K–00	39 – 1
BSW–2836L–00	39 – 27
BSW–28377–00–P2	39 – 15
BSW–28377–00–P3	39 – 15
BBW–2837L–00	37 – 9
BBW–2837M–00	37 – 26
BBW–2837U–00	39 – 41
BBW–283J3–00	38 – 23
BBW–2845W–00	45 – 50
59C–46153–00	24 – 23
BC3–46241–01	24 – 50
BBW–81410–02	40 – 1

PART NO.	REF. NO.
B7M–81450–00	40 – 2
BBW–81815–00	16 – 14
4B5–81826–00	16 – 9
4XV–8182A–00	16 – 13
	16 – 16
4B5–81840–00	16 – 8
4B5–81844–00	16 – 10
1FK–81847–00	16 – 11
3TB–81847–00	16 – 12
4B5–81871–00	16 – 15
BC3–81890–00	16 – 7
BC3–81940–00	45 – 8
1ST–81950–00	45 – 41
5JJ–81950–11	45 – 43
5JJ–81952–00	45 – 42
BBW–81960–01	45 – 13
3WP–81980–00	45 – 17
4WA–81980–00	45 – 16
2DF–82021–00	45 – 47
23P–82100–02	45 – 3
BBW–82114–00	38 – 30
BSW–82114–00	30 – 9
	32 – 11
5SL–82119–10	45 – 10
BC3–82121–00	45 – 7
BBW–82128–00	45 – 5
BSW–8212B–00	20 – 27
BBW–8212C–00	20 – 32
26H–82131–00	45 – 4
137–82131–01	45 – 2
5EA–82151–00	45 – 9
5JJ–82151–00	45 – 18
5JJ–82151–10	45 – 19
5JJ–82151–20	45 – 21
5JJ–82151–30	45 – 20
5JJ–82151–60	45 – 22
5JJ–82151–80	45 – 23
BBW–821F1–00	38 – 27
BBW–82310–00	46 – 4
BBW–82361–00	44 – 1
B7M–82370–00	46 – 3
1WS–82380–00	46 – 6
2DF–82511–09	45 – 48
BC3–8252U–00	45 – 38
BSW–8252U–00	46 – 10
BC3–82566–01	45 – 28
BSW–82590–00	45 – 15
1UA–82591–00	27 – 26

PART NO.	REF. NO.
1UA–82591–00	45 – 24
3MA–82591–00	45 – 25
BBW–8259E–00	45 – 49
BSW–82917–00	35 – 36
BBW–8291R–00	44 – 12
BSW–82960–00	34 – 3
BSW–82963–00	34 – 2
BSW–83210–00	46 – 16
BBW–83306–00	39 – 42
BC3–83371–11	46 – 14
BSW–83383–00	46 – 19
BSW–83500–00	41 – 1
4XV–83513–00	20 – 24
5PS–83513–00	42 – 8
B7N–83522–00	28 – 12
	45 – 58
BSW–83559–00	39 – 35
4P9–83591–00	3 – 23
2PW–83912–00	35 – 35
2PW–83922–00	35 – 9
5VU–83930–00	44 – 9
BBW–83959–00	44 – 6
BSW–83980–00	35 – 12
BSW–84300–00	42 – 1
BBW–8431U–00	47 – 13
BSW–84710–00	43 – 1
3Y6–85130–02	22 – 44
59C–85131–00	46 – 1
2PW–85546–00	45 – 52
BBW–85752–00	27 – 15
B7M–85885–01	11 – 9
5YU–85886–00	46 – 17
BSW–8591A–20	45 – 1
BC3–8592A–10	12 – 20
BSW–85930–07	47 – 1
BSW–8593A–00	45 – 54
BBW–85970–00	47 – 6
BBW–85980–00	47 – 9
BMM–86261–00	45 – 45
BSW–86265–00	45 – 46
BBW–8A310–00	46 – 8
B7N–8A8D0–00	45 – 59
B1X–F4421–00	27 – 39
BSW–F6280–00	39 – 54
BSW–F6290–00	39 – 57
BBW–H4740–00	22 – 40
B74–H4770–00	29 – 2
BSW–H592A–00	12 – 23

PART NO.	REF. NO.
BMP–W000B–00	2 – 14
	25 – 20
BBV–W000V–00	2 – 1
	18 – 34
BBV–W003B–00	2 – 6
	26 – 47
BC3–W2341–00	25 – 8
BSW–W8276–01	30 – 8
	32 – 10
BSW–W8598–00	30 – 10
	32 – 12
BSW–W862A–50	45 – 44
90101–08013	24 – 9
	24 – 12
90101–10046	36 – 26
90101–12060	24 – 70
90105–06027	3 – 3
90105–06127	20 – 48
	20 – 50
90105–06181	24 – 37
90105–06230	45 – 12
90105–06771	47 – 4
90105–08129	20 – 30
90105–08150	29 – 14
	29 – 19
90105–08182	33 – 29
90105–08M35	20 – 44
	20 – 46
90105–10211	25 – 14
90105–10220	24 – 63
90105–10237	32 – 20
90105–10283	36 – 22
	36 – 25
90105–10318	24 – 68
90105–10440	31 – 25
90105–12052	20 – 12
90105–14002	30 – 19
90109–05022	22 – 9
	22 – 17
	37 – 14
	37 – 31
90109–06212	43 – 4
90109–06264	38 – 6
90109–06282	45 – 33
90109–06295	6 – 9
90109–08196	45 – 34
	45 – 37
90109–083G4	31 – 2

PART NO.	REF. NO.
90109–10027	24 – 55
90109–10067	36 – 18
90110–05081	27 – 4
90110–05082	27 – 3
90110–06021	3 – 13
90110–06036	18 – 30
90110–06134	12 – 11
90110–06163	24 – 20
90110–06168	9 – 5
	9 – 12
90110–06335	27 – 21
90110–06379	3 – 14
90110–06437	39 – 30
90110–08132	25 – 15
90111–05002	34 – 11
	39 – 37
90111–05021	37 – 6
	37 – 22
	37 – 41
	37 – 45
90111–05045	21 – 4
90111–05058	45 – 51
90111–05065	39 – 51
90111–06059	45 – 40
90111–06064	32 – 19
90111–06089	22 – 50
90111–06116	24 – 45
90111–06140	21 – 8
90111–06191	22 – 3
90111–06202	12 – 34
90111–10007	36 – 33
90111–10026	4 – 19
90116–09584	3 – 8
90119–06096	37 – 3
	37 – 10
	37 – 18
	37 – 27
90119–06156	42 – 9
90119–06209	23 – 10
90119–06270	7 – 17
90119–06312	7 – 12
90119–06320	37 – 5
	37 – 21
90149–05030	30 – 6
	32 – 8
90149–05299	46 – 9
90149–06082	14 – 5
	40 – 4

PART NO.	REF. NO.
90149–06093	40 – 3
90149–06104	22 – 30
	22 – 31
	22 – 35
	22 – 36
90149–08002	20 – 3
90149–08009	33 – 2
90149–08030	16 – 6
90151–06023	18 – 12
90159–06021	38 – 12
90159–06022	38 – 26
90160–05013	10 – 4
90164–05001	20 – 25
90167–05079	23 – 6
	23 – 8
	37 – 13
	37 – 30
	38 – 7
	38 – 41
90169–05001	38 – 18
90170–16326	17 – 20
90170–18221	18 – 23
90170–28419	25 – 7
90170–36279	18 – 22
90170–48003	17 – 6
90176–06017	15 – 16
90176–09001	3 – 12
90176–10075	12 – 28
90179–05003	39 – 52
90179–06018	33 – 28
90179–07652	4 – 4
90179–08442	12 – 25
90179–09379	4 – 8
90179–09612	3 – 11
90179–20013	18 – 13
90179–30006	25 – 3
90183–05042	22 – 2
	23 – 2
	37 – 4
	37 – 12
	37 – 19
	37 – 29
	38 – 14
	38 – 34
	38 – 37
	39 – 6
	39 – 10
	39 – 18

PART NO.	REF. NO.
90183–05042	39 – 40
	42 – 5
	43 – 5
90183–05076	21 – 2
	23 – 4
	29 – 4
	38 – 8
	38 – 13
	39 – 12
	39 – 20
	39 – 32
90183–05M02	37 – 40
	37 – 44
	39 – 26
90183–06069	20 – 31
	20 – 37
90183–060A6	22 – 6
	22 – 11
	22 – 19
	29 – 5
	38 – 22
	39 – 9
	39 – 17
	42 – 2
90185–10012	36 – 37
90185–10022	12 – 29
	36 – 23
	36 – 27
90185–10060	36 – 19
90185–24002	32 – 25
90201–04034	45 – 56
90201–05045	38 – 16
90201–06032	39 – 45
90201–06033	8 – 14
90201–06036	47 – 5
90201–06079	12 – 6
	12 – 16
90201–080E2	28 – 20
90201–08103	29 – 7
90201–08122	29 – 15
	29 – 20
90201–087F0	20 – 36
90201–090P4	3 – 10
90201–10035	24 – 58
	36 – 36
90201–10043	25 – 11
90201–10051	36 – 35
90201–10071	12 – 30

PART NO.	REF. NO.
90201–10669	12 – 26
90201–12034	24 – 71
90201–13015	24 – 57
90201–22018	24 – 25
90201–24017	17 – 19
90201–244A9	17 – 3
90201–25020	32 – 26
90201–25290	16 – 5
90201–28017	25 – 6
90202–05224	39 – 53
90202–30235	25 – 4
90249–12004	33 – 27
90269–06001	24 – 49
90269–06008	20 – 39
	22 – 5
	22 – 14
	22 – 20
	22 – 23
	22 – 26
	22 – 38
	29 – 10
	38 – 9
	38 – 32
	39 – 2
	39 – 14
	39 – 22
	39 – 25
	43 – 3
90269–06010	11 – 16
90269–06019	34 – 9
90269–06083	38 – 10
90269–07014	8 – 21
	39 – 3
90269–07077	20 – 42
90269–08002	15 – 2
90269–08005	39 – 28
90280–05048	4 – 23
90338–06018	23 – 3
	39 – 36
90338–08174	20 – 22
90338–10132	38 – 21
90338–36004	22 – 24
90387–05003	22 – 41
90387–05072	34 – 12
90387–06065	8 – 13
90387–06107	21 – 5
	46 – 13
90387–06130	45 – 39

PART NO.	REF. NO.
90387–06141	12 – 14
90387–06150	47 – 3
90387–06161	42 – 7
90387–06173	23 – 11
90387–06200	21 – 6
90387–06270	22 – 32
	22 – 37
90387–062U9	27 – 5
90387–06317	12 – 4
90387–06364	21 – 7
90387–06372	22 – 48
	24 – 41
	24 – 44
	24 – 47
90387–064H8	36 – 6
	36 – 13
90387–065L7	8 – 12
90387–07006	39 – 46
90387–08128	29 – 12
	29 – 17
90387–10020	36 – 34
90387–10046	12 – 19
90387–10100	20 – 34
90387–10114	20 – 29
90387–127W0	24 – 62
90387–17011	24 – 29
90387–20018	17 – 4
90387–22016	30 – 17
90387–22030	30 – 18
90387–26001	18 – 25
90401–10020	35 – 18
	35 – 19
	35 – 43
90401–10038	35 – 20
90413–06031	27 – 44
90430–08119	3 – 6
	13 – 13
90430–10004	3 – 24
90430–10005	35 – 21
	35 – 44
90445–217G3	36 – 31
90446–08002	44 – 3
90450–32015	8 – 1
90450–46005	10 – 15
90450–56009	11 – 18
90450–74001	15 – 4
90460–15126	35 – 22
90464–04005	37 – 39

PART NO.	REF. NO.
90464–04005	37 – 43
90464–07018	22 – 12
	22 – 21
	22 – 29
	22 – 34
	38 – 35
	38 – 38
	39 – 39
90464–08126	20 – 52
90464–09130	20 – 51
90464–09M31	27 – 38
90464–12001	39 – 44
90464–12013	47 – 8
90464–12M58	27 – 34
90464–14003	47 – 12
90464–14012	27 – 35
90464–14013	35 – 42
90464–16003	12 – 35
90464–16006	34 – 14
	34 – 19
90464–16012	26 – 46
	35 – 41
90464–16061	38 – 29
90464–18246	44 – 4
	45 – 36
90464–20070	27 – 37
90464–23001	8 – 28
90464–25009	44 – 2
90464–25010	45 – 53
90464–28175	8 – 18
90464–30010	38 – 28
90465–10098	12 – 36
	22 – 51
	22 – 53
	47 – 11
90467–09006	27 – 45
90467–090A2	23 – 17
	27 – 36
90467–10008	23 – 18
90467–10038	8 – 25
90467–110A3	27 – 33
90467–11106	10 – 14
90467–15001	8 – 24
	10 – 17
90467–15054	10 – 12
90468–040A0	24 – 42
90468–16001	28 – 23
90480–01558	27 – 19

PART NO.	REF. NO.
90480–01559	22 – 10
	22 – 18
	37 – 8
	37 – 25
	39 – 13
	39 – 21
90480–10334	23 – 12
90480–11009	22 – 42
90480–12581	12 – 3
	12 – 13
90480–13398	42 – 4
90480–13567	25 – 17
90480–14100	38 – 24
90480–15018	47 – 2
90480–15363	8 – 15
90480–16301	8 – 11
90501–104F9	9 – 16
90501–15001	36 – 4
	36 – 11
90501–620A1	18 – 19
90506–23014	36 – 30
90506–40007	36 – 16
90520–02016	27 – 11
90520–04016	15 – 22
90520–10015	38 – 5
90520–10036	10 – 16
90520–20018	37 – 20
90520–20019	37 – 23
91312–04016	28 – 13
91312–05010	27 – 18
91312–05020	46 – 7
91312–06016	11 – 19
91312–06020	7 – 9
91312–06025	6 – 6
91312–06035	3 – 19
91312–08020	24 – 3
91312–08030	25 – 13
	26 – 38
91312–10060	20 – 7
91314–08040	26 – 18
	26 – 36
91317–04030	45 – 60
91380–06012	45 – 11
91402–20012	36 – 2
	36 – 9
91402–25015	28 – 18
91702–06038	36 – 3
	36 – 10

PART NO.	REF. NO.
91702–08028	28 – 8
	28 – 17
91808–16023	3 – 4
92012–05020	45 – 29
92012–06010	25 – 19
	27 – 31
92012–06012	26 – 45
	29 – 26
	29 – 28
	35 – 17
92012–06014	15 – 9
92012–06050	9 – 2
92012–08012	28 – 21
92012–08014	28 – 9
92014–06016	12 – 8
	12 – 15
92014–06025	12 – 5
92014–06030	39 – 56
	39 – 59
92017–06012	26 – 43
92902–04600	28 – 16
	45 – 55
92902–06200	12 – 9
93101–30001	4 – 25
93101–35001	18 – 2
93102–12442	7 – 4
93102–15004	18 – 32
93102–25017	24 – 28
93102–25064	19 – 10
93102–30284	24 – 8
93102–35023	24 – 16
93102–42004	18 – 27
93102–44008	4 – 26
93102–55004	24 – 7
93104–41119	18 – 16
93106–28043	30 – 4
93106–40013	32 – 5
93106–40027	32 – 6
93109–17071	24 – 61
93210–06422	9 – 4
93210–09525	9 – 9
93210–10096	9 – 22
93210–14579	9 – 11
93210–16325	14 – 10
93210–19123	14 – 15
93210–21006	19 – 6
93210–21190	7 – 16
93210–22382	13 – 11

PART NO.	REF. NO.
93210–26001	18 – 26
93210–30611	18 – 9
93210–33133	7 – 11
93210–44545	18 – 17
93210–48364	13 – 9
93210–50553	24 – 2
93210–60426	38 – 25
93306–00106	7 – 3
93306–00713	18 – 10
93306–07208	30 – 3
93306–07809	32 – 3
93306–205A8	19 – 9
93306–205B5	32 – 2
93306–20651	18 – 28
93306–20662	24 – 15
93306–30102	17 – 21
93306–30217	18 – 33
93306–30427	19 – 4
93306–90602	4 – 24
93315–31758	24 – 59
93315–41774	24 – 60
93317–32493	17 – 2
93332–00010	24 – 27
93332–00086	24 – 4
93399–99932	2 – 17
	25 – 1
93399–99957	2 – 15
	26 – 39
93450–16068	4 – 17
93450–18157	4 – 14
93501–04011	36 – 5
	36 – 12
93505–08030	9 – 15
93608–60001	4 – 20
93612–16254	3 – 9
	3 – 22
94112–15020	30 – 7
94116–15024	32 – 9
94580–25058	9 – 7
94591–53134	6 – 3
94701–00443	1 – 1
	3 – 15
95022–08110	13 – 5
95022–08120	13 – 6
95302–08600	24 – 10
	24 – 13
95602–05200	45 – 30
95602–06200	28 – 6

PART NO.	REF. NO.
95602–08200	28 – 5
95602–10100	25 – 12
95602–10200	24 – 64
	24 – 69
95602–12200	20 – 13
	24 – 72
95607–04100	45 – 57
95607–05200	22 – 43
	22 – 45
95612–08618	3 – 7
95612–10100	24 – 56
95617–06100	35 – 8
	35 – 34
95702–05500	46 – 2
95702–06500	21 – 11
	39 – 43
95812–06012	22 – 52
95812–06016	20 – 18
95812–06025	42 – 6
95812–06040	20 – 19
95812–10045	20 – 26
95812–12045	20 – 8
	20 – 11
95827–06020	46 – 12
95D32–06010	29 – 25
95D32–06012	24 – 35
	46 – 15
	47 – 14
95D32–06014	24 – 48
	34 – 18
	39 – 50
95D32–06016	29 – 22
95D32–06020	20 – 20
	21 – 12
	45 – 14
95D32–06025	16 – 17
	27 – 7
95D32–06030	21 – 10
95D32–06035	21 – 9
95D32–08025	29 – 6
95D32–08035	20 – 35
95D32–10025	24 – 32
95D32–10045	12 – 27
95D32–10090	24 – 33
95D32–10100	24 – 31
95D37–06016	20 – 28
	20 – 33
	39 – 47

PART NO.	REF. NO.
95E32–06012	20 – 15
	34 – 16
	34 – 21
	35 – 46
	45 – 27
95E32–06014	47 – 7
	47 – 10
95E32–06020	8 – 4
	46 – 5
95E32–06035	13 – 3
	14 – 8
	14 – 13
	15 – 17
95E32–06050	13 – 4
95E32–08012	3 – 5
95E32–08025	15 – 14
95E32–08040	15 – 13
97602–04214	35 – 13
	35 – 37
97702–50012	22 – 4
	22 – 8
	22 – 16
	37 – 7
	37 – 11
	37 – 24
	37 – 28
	38 – 15
	38 – 31
	39 – 4
	39 – 11
	39 – 19
	39 – 24
	39 – 29
97702–50016	37 – 15
	37 – 47
97702–50516	46 – 18
98502–03008	28 – 15
98507–05010	34 – 7
98507–05012	44 – 11
99009–12400	7 – 10
99009–25400	19 – 8
99009–30400	24 – 22
99009–42500	18 – 31
99009–62500	24 – 21
99480–08020	15 – 12
99530–10114	13 – 2
	14 – 7
	14 – 12

PART NO.	REF. NO.
99530–14016	24 – 30

PART NO.	REF. NO.

PART NO.	REF. NO.