YAMAHA

PARTS CATALOGUE

DPBMC

XTZ690 (BYC1) MALAYSIA

1ZBYC-440E1

( )

YAMAHA GENUINE Parts & Accessories

XTZ690
PARTS CATALOGUE
©2023 by Yamaha Motor Co., Ltd.
1st edition, October 2023
All rights reserved.
Any reprinting or unauthorized use
without the written permission of
Yamaha Motor Co., Ltd.
is expressly prohibited.
Printed in Japan.

FOREWORD

This Parts Catalogue is related to the parts for the model(s) on the cover page. When you are ordering replacement parts, please refer to this Parts Catalogue and quote both part numbers and part names correctly.

1. Modifications or additions which have been made after the issue of the Parts Catalogue will be announced in the Parts News.
   It is advisable that you make the necessary corrections to the Parts Catalogue according to the Parts News.

2. Abbreviations
   The following abbreviations are used in this Parts Catalogue.

   "UR" Use specified parts number.

   "UN" Use as many as needed.

   "AP" Alternate Parts

   "LM" Locally Made (Parts need to be ordered locally)

   "F#" Frame No. (Applicable machine No.)

   "O/S" Over Size

3. The number of components for assembly
   - Parts, which are to be supplied in an assembly, are listed with a dot (.) in front of the part name as shown below.
   - The numeral appearing to the right of each component part indicates the quantity of parts for each assembly unit.

PART NO.	DESCRIPTION	Q'TY	REMARKS
2F5–83310–60	FRONT FLASHER LIGHT ASSY	2	
115–83311–60	.BULB (6V–18W)	1	

4. Applicable colours of graphics are represented in the "REMARKS" as shown below.

PART NO.	DESCRIPTION	Q'TY	REMARKS
2N4–24110–00–X5	FUEL TANK COMP.	2	MXR
3J1–24240–10	.GRAPHIC, FUEL TANK	1	FOR MXR

5. Note that the illustrations for reference in finding parts numbers are not to be used for assembling. When assembling, please use the applicable service manual.

6. The asterisk (*) before a reference number indicates modified items after the first edition.

7. Applicable Serial No.

Frame Serial No.

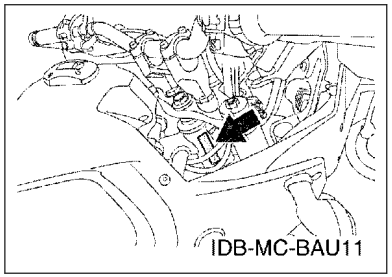

Engine Serial No.

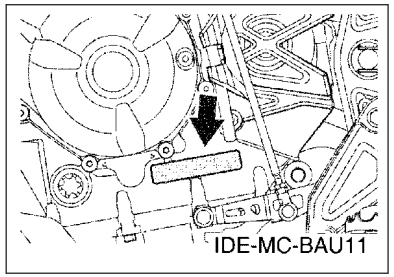

8. Applicable Colour Code (The (*) mark shows Model colour.)

Abbreviation	Colour Name	Colour Code
DPBMC(*)	DEEP PURPLISH BLUE METALLIC C	0564
MBL2	MAT BLACK 2	0582
MDNM6	MAT DARK GRAY METALLIC 6	1579

9. Applicable Starting Serial No.

Frame Serial No.

Serial No.	Name Of Q'ty Column	Model Code

Engine Serial No.

Serial No.	Name Of Q'ty Column	Model Code

CONTENTS

ENGINE

CYLINDER HEAD....1
CRANKSHAFT & PISTON....2
VALVE....4
CAMSHAFT & CHAIN....6
WATER PUMP....7
RADIATOR & HOSE....9
OIL PUMP....11
OIL CLEANER....12
INTAKE....13
INTAKE 2....15
EXHAUST....16
CRANKCASE....17
CRANKCASE COVER 1....18
STARTER....19
CLUTCH....20
TRANSMISSION....21
SHIFT CAM & FORK....23
SHIFT SHAFT....24

CHASSIS

FRAME....25
FENDER....27
SIDE COVER....29
REAR ARM....30
REAR SUSPENSION....32
STEERING....33
FRONT FORK....34
FUEL TANK....36
FUEL TANK 2....38
SEAT....40
FRONT WHEEL....41
FRONT BRAKE CALIPER....42
REAR WHEEL....43
REAR BRAKE CALIPER....45
STEERING HANDLE & CABLE....46
FRONT MASTER CYLINDER....48
STAND & FOOTREST....49
STAND & FOOTREST 2....51
REAR MASTER CYLINDER....52
COWLING 1....54
COWLING 2....56
GENERATOR....57
STARTING MOTOR....58
FLASHER LIGHT....59
METER....60
HEADLIGHT....61
TAILLIGHT....62
HANDLE SWITCH & LEVER....63
ELECTRICAL 1....64
ELECTRICAL 2....65
ELECTRICAL 3....67

INDEX

NUMERICAL INDEX....68

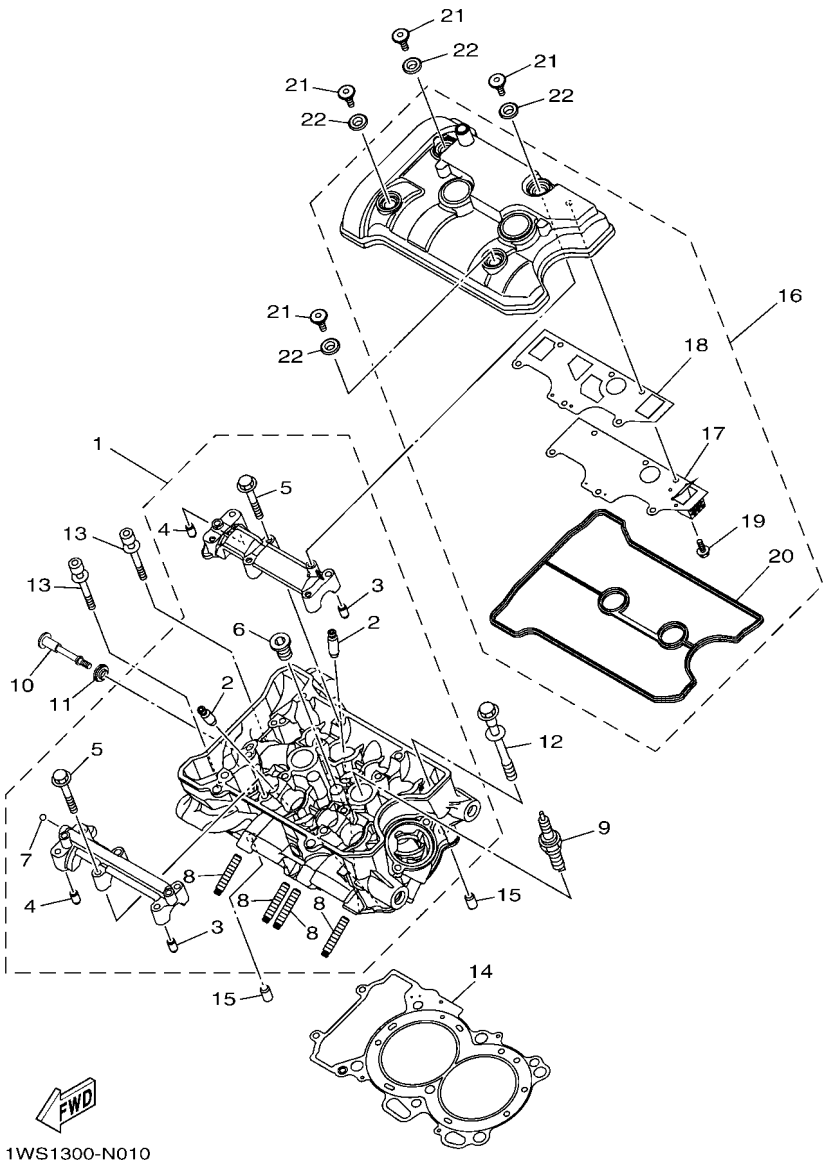

FIG. 1 CYLINDER HEAD

REF. NO.	PART NO.	DESCRIPTION	BYC1					REMARKS
1	1WS–11101–08	CYLINDER HEAD ASSY	1					
2	4D9–11133–10	.GUIDE, VALVE 1	8					
3	91808–16023	.PIN, DOWEL	2					
4	91808–16023	.PIN, DOWEL	2					
5	90105–06027	.BOLT, FLANGE	12					
6	90340–18002	.PLUG, STRAIGHT SCREW	1					
7	93501–04011	.BALL	1					
8	90116–08087	.BOLT, STUD	4					
9	94701–00436	PLUG, SPARK (NGK LMAR8A-9)	2					
10	90109–06293	BOLT	1					
11	5VY–1111G–00	RUBBER, MOUNT 1	1					
12	90119–10056	BOLT, WITH WASHER	6					
13	90110–06081	BOLT, HEXAGON SOCKET HEAD	2					
14	1WS–11181–00	GASKET, CYLINDER HEAD 1	1					
15	99530–10114	PIN, DOWEL	2					
16	1WS–11190–02	COVER, CYLINDER HEAD 1	1					MDYNM2
17	1WS–11165–01	.PLATE, BREATHER	1					
18	1WS–11169–00	.GASKET, BREATHER COVER	1					
19	90105–05024	.BOLT, FLANGE	6					
20	1WS–11193–01	.GASKET, HEAD COVER 1	1					
21	90109–066F0	BOLT	4					
22	5VY–1111G–00	RUBBER, MOUNT 1	4					

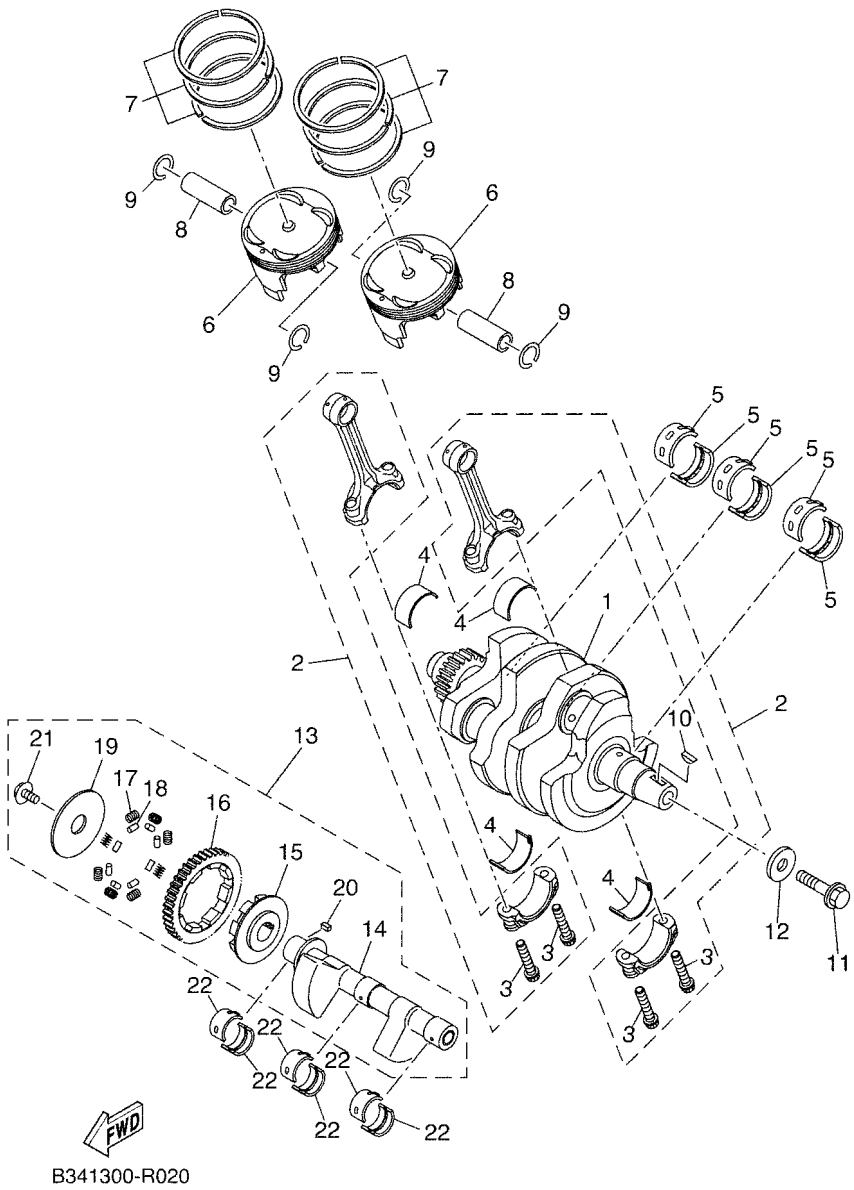

FIG. 2 CRANKSHAFT & PISTON

REF. NO.	PART NO.	DESCRIPTION	BYC1					REMARKS
1	1WS–11400–00	CRANKSHAFT ASSY	1					
2	1WS–11650–00	CONNECTING ROD ASSY	2					
3	1RC–11654–00	.BOLT, CONNECTING ROD	2					
4	1RC–11656–00	PLANE BEARING, CONNECTING ROD	4					UR BLUE
	1RC–11656–10	PLANE BEARING, CONNECTING ROD	4					UR BLACK
	1RC–11656–20	PLANE BEARING, CONNECTING ROD	4					UR BROWN
	1RC–11656–30	PLANE BEARING, CONNECTING ROD	4					UR GREEN
5	3GM–11416–B0	PLANE BEARING, CRANKSHAFT 1	6					UR PURPLE
	3GM–11416–A0	PLANE BEARING, CRANKSHAFT 1	6					UR WHITE
	3GM–11416–00	PLANE BEARING, CRANKSHAFT 1	6					UR BLUE
	3GM–11416–10	PLANE BEARING, CRANKSHAFT 1	6					UR BLACK
	3GM–11416–20	PLANE BEARING, CRANKSHAFT 1	6					UR BROWN
6	1WS–11631–00	PISTON (STD)	2					
7	1WS–11603–01	PISTON RING SET (STD)	2					
8	1WS–11633–00	PIN, PISTON	2					
9	93450–19052	CIRCLIP	4					
10	90280–05029	KEY, WOODRUFF	1					
11	90105–126A8	BOLT, FLANGE	1					
12	90201–12008	WASHER, PLATE	1					
13	1WS–11500–00	BALANCER ASSY	1					
14	1WS–11454–00	.WEIGHT 1	1					
15	1WS–11496–00	.BOSS, BUFFER	1					
16	1WS–11531–00	.GEAR, BALANCE WEIGHT	1					
17	90501–22721	.SPRING, COMPRESSION	8					
18	93605–10090	.PIN, DOWEL	8					
19	1WS–11533–00	.PLATE, ABSORBER	1					
20	90282–04036	.KEY, STRAIGHT	1					

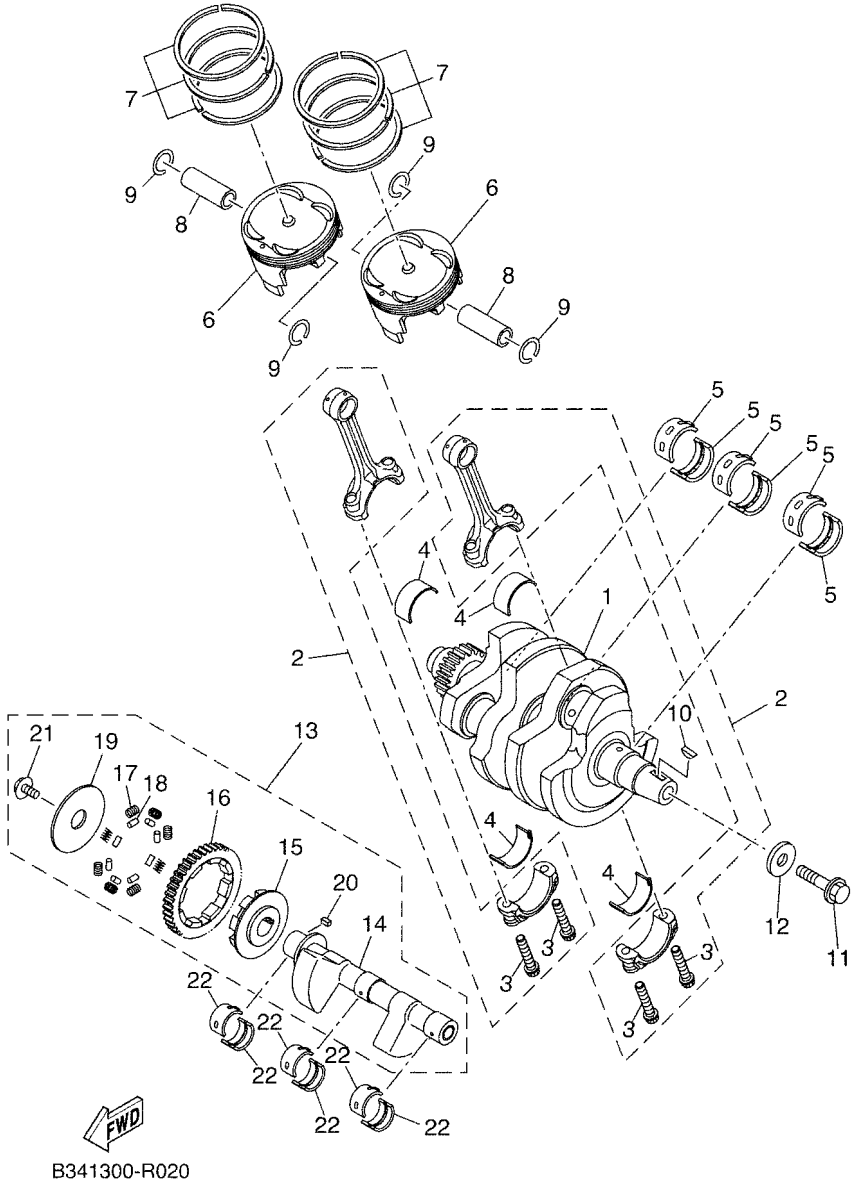

FIG. 2 CRANKSHAFT & PISTON

REF. NO.	PART NO.	DESCRIPTION	BYC1					REMARKS
21	90105–10445	.BOLT, FLANGE	1					
22	2S3–11413–00	METAL, BALANCE WEIGHT	6					UR BLUE
	2S3–11413–10	METAL, BALANCE WEIGHT	6					UR BLACK
	2S3–11413–20	METAL, BALANCE WEIGHT	6					UR BROWN
	2S3–11413–30	METAL, BALANCE WEIGHT	6					UR GREEN
	2S3–11413–40	METAL, BALANCE WEIGHT	6					UR YELLOW

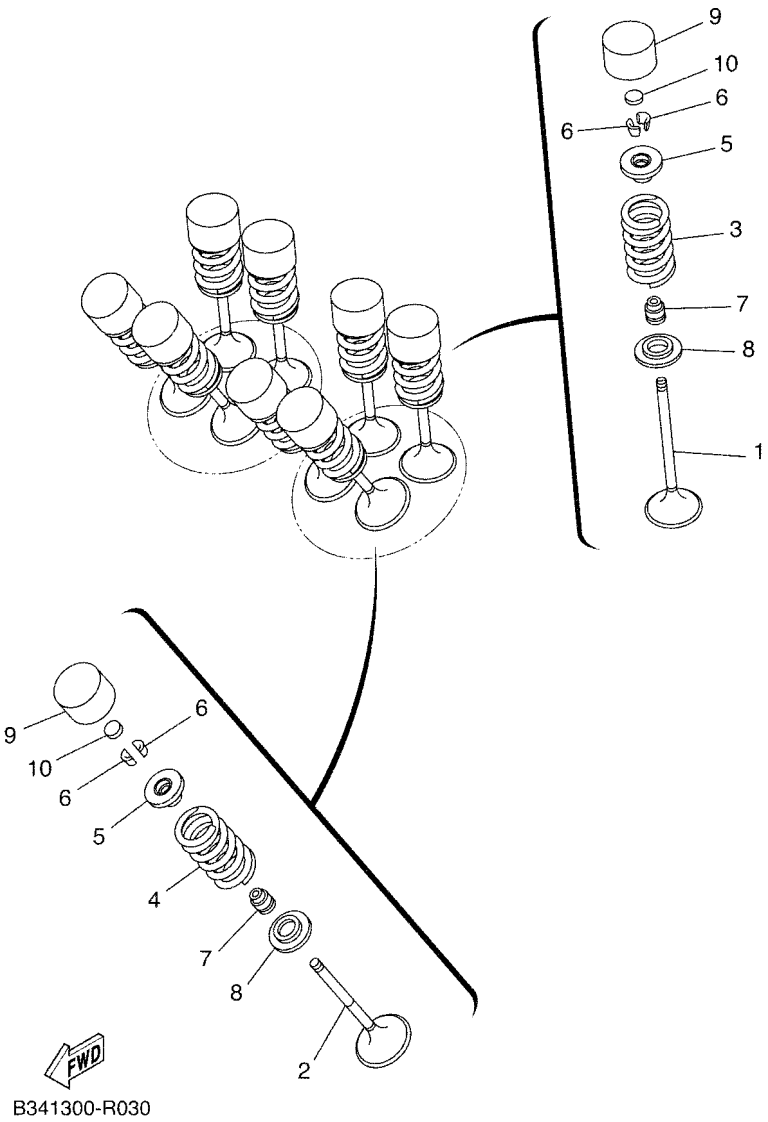

FIG. 3 VALVE

REF. NO.	PART NO.	DESCRIPTION	BYC1					REMARKS
1	1WS–12111–01	VALVE, INTAKE	4					
2	1WS–12121–01	VALVE, EXHAUST	4					
3	1WS–12113–01	SPRING, VALVE INNER	4					
4	1WS–12114–00	SPRING, VALVE OUTER	4					
5	1WS–12117–00	RETAINER, VALVE SPRING	8					
6	1WG–12118–00	LOCK, VALVE SPRING RETAINER	16					
7	4TE–12119–00	SEAL, VALVE STEM	8					
8	1WS–12116–00	SEAT, VALVE SPRING	8					
9	B4T–12153–00	LIFTER, VALVE	8					
	4C8–12153–09	LIFTER, VALVE (O/S)	8					AP GREEN
10	1HX–12168–F0	PAD, ADJUSTING 2 (1.50)	8					UR
	1HX–12168–H1	PAD, ADJUSTING 2 (1.55)	8					UR
	1HX–12168–K1	PAD, ADJUSTING 2 (1.60)	8					UR
	1HX–12168–M1	PAD, ADJUSTING 2 (1.65)	8					UR
	1HX–12168–R1	PAD, ADJUSTING 2 (1.70)	8					UR
	1HX–12168–U1	PAD, ADJUSTING 2 (1.75)	8					UR
	1HX–12168–W1	PAD, ADJUSTING 2 (1.80)	8					UR
	1HX–12168–Y1	PAD, ADJUSTING 2 (1.85)	8					UR
	1HX–12169–11	PAD, ADJUSTING 2 (1.90)	8					UR
	1HX–12169–31	PAD, ADJUSTING 2 (1.95)	8					UR
	1HX–12169–50	PAD, ADJUSTING 2 (2.00)	8					UR
	1HX–12169–70	PAD, ADJUSTING 2 (2.05)	8					UR
	1HX–12169–90	PAD, ADJUSTING 2 (2.10)	8					UR
	1HX–12169–E0	PAD, ADJUSTING 2 (2.15)	8					UR
	1HX–12169–G0	PAD, ADJUSTING 2 (2.20)	8					UR
	1HX–12169–J0	PAD, ADJUSTING 2 (2.25)	8					UR
	1HX–12169–L0	PAD, ADJUSTING 2 (2.30)	8					UR

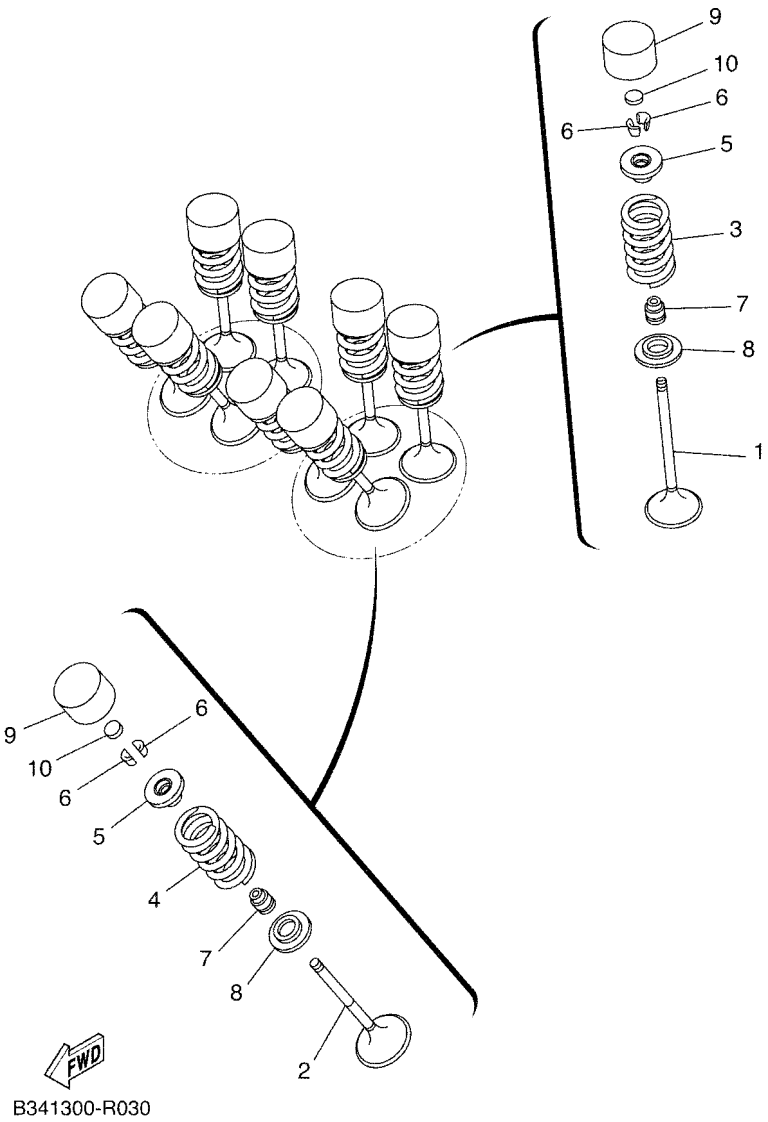

FIG. 3 VALVE

REF. NO.	PART NO.	DESCRIPTION	BYC1					REMARKS
10	1HX–12169–N0	PAD, ADJUSTING 2 (2.35)	8					UR
	1HX–12169–T0	PAD, ADJUSTING 2 (2.40)	8					UR

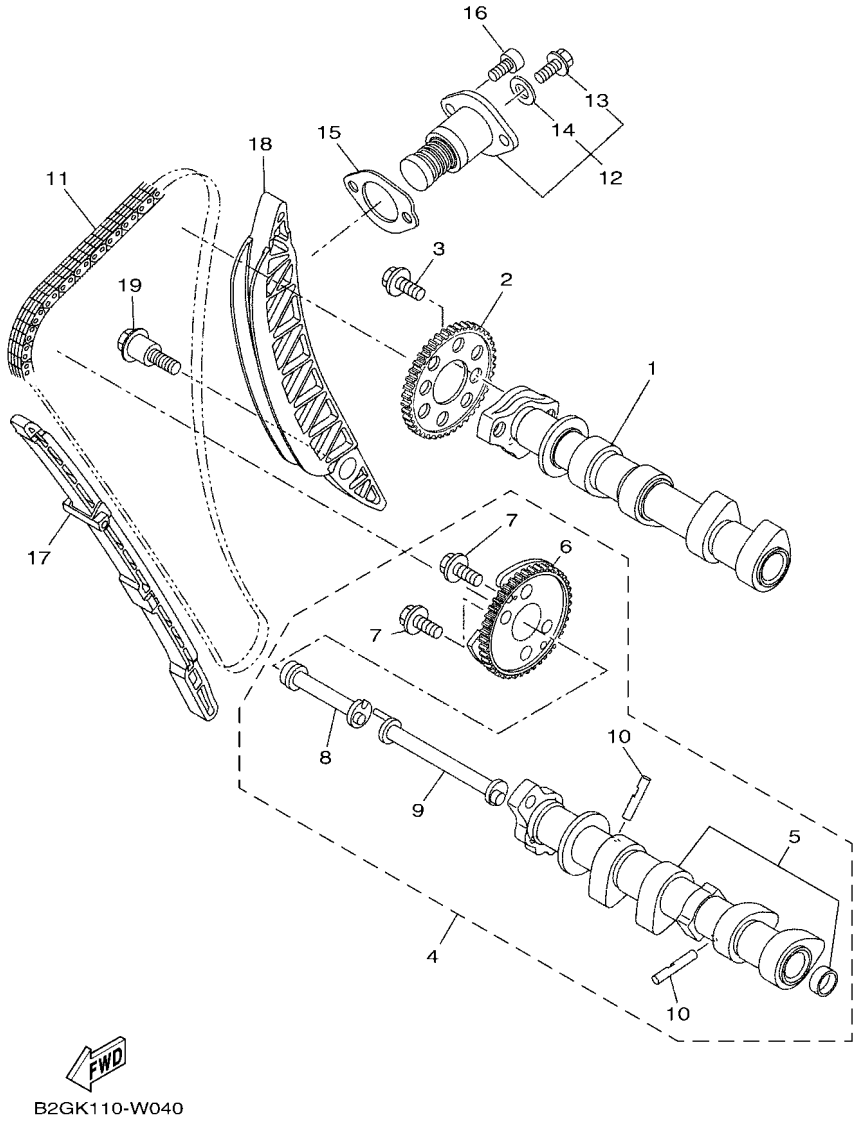

FIG. 4 CAMSHAFT & CHAIN

REF. NO.	PART NO.	DESCRIPTION	BYC1					REMARKS
1	1WS–12170–00	CAMSHAFT ASSY 1	1					
2	BU3–12176–00	SPROCKET, CAM CHAIN	1					
3	90105–07006	BOLT, FLANGE	2					
4	1WS–12180–10	CAMSHAFT ASSY 2	1					
5	1WS–W1218–10	.CAMSHAFT SET	1					
6	1WS–12280–00	.DECOMPRESSION ASSY	1					
7	90105–07006	.BOLT, FLANGE	2					
8	1WS–12247–00	.SHAFT, TENSIONER	1					
9	1WS–12257–00	.SHAFT 2	1					
10	1PD–12288–00	.CAM, DECOMPRESSION	2					
11	94591–61134	CHAIN (T098XRH2015-134P)	1					
12	1WS–12210–02	TENSIONER ASSY, CAM CHAIN	1					
13	5EL–12228–00	.BOLT	1					
14	5SL–12214–00	.GASKET	1					
15	1WS–12213–00	GASKET, TENSIONER CASE	1					
16	90110–06396	BOLT, HEXAGON SOCKET HEAD	2					
17	1WS–12251–00	DAMPER, CHAIN 1	1					
18	1WS–12252–00	DAMPER, CHAIN 2	1					
19	90109–06295	BOLT	1					

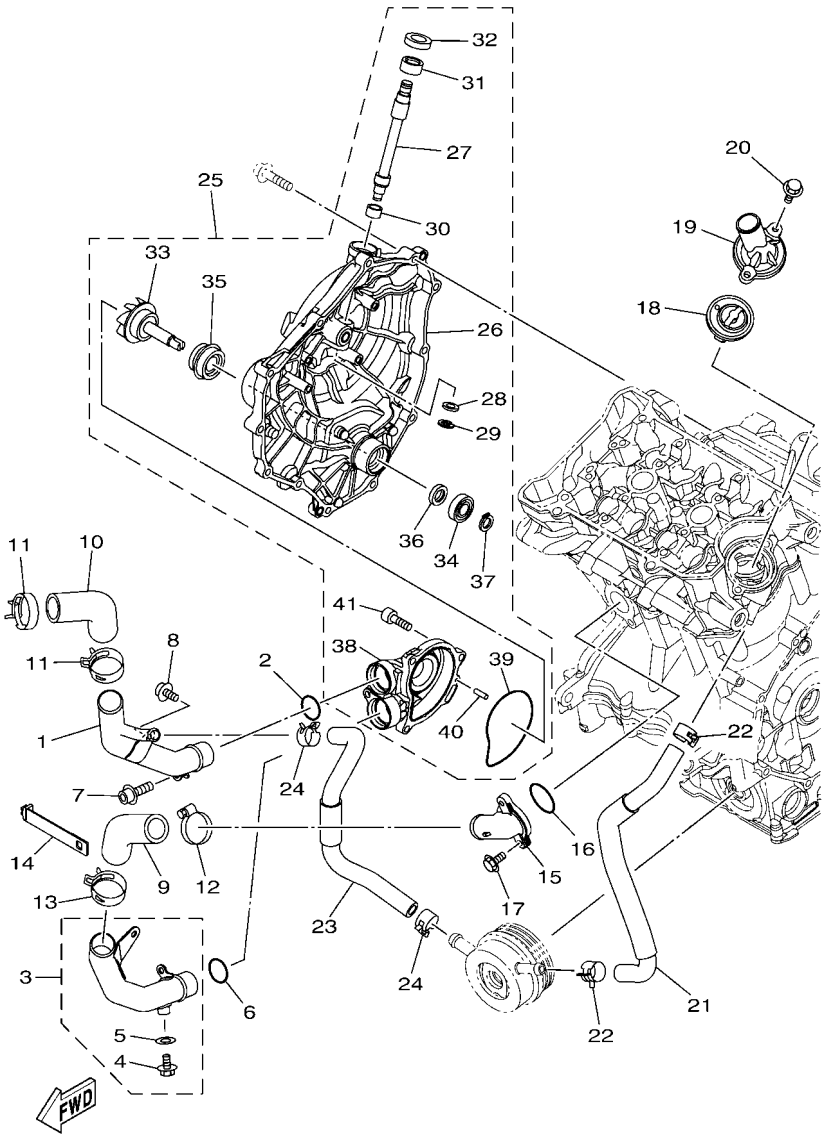

FIG. 5 WATER PUMP

REF. NO.	PART NO.	DESCRIPTION	BYC1					REMARKS
1	1WS–12481–01	PIPE 1	1					
2	93210–235A1	O-RING	1					
3	1WS–12482–01	PIPE 2	1					
4	95022–06010	.BOLT, FLANGE	1					
5	90430–06014	.GASKET	1					
6	93210–235A1	O-RING	1					
7	91314–06014	BOLT, HEXAGON SOCKET HEAD	1					
8	90110–06152	BOLT, HEXAGON SOCKET HEAD	1					
9	1WS–12576–00	HOSE 1	1					
10	BW3–12577–00	HOSE 2	1					UR
	BW3–E2577–00	HOSE 2	1					UR
11	90467–290A0	CLIP	2					
12	90450–35001	HOSE CLAMP ASSY	1					
13	90467–290A0	CLIP	1					
14	BEH–1246A–00	COVER 1	1					
15	1WS–12469–00	JOINT 1	1					
16	93210–33006	O-RING	1					
17	95812–06020	BOLT, FLANGE	2					
18	1WS–12410–01	THERMOSTAT ASSY	1					
19	1WS–12413–00	COVER, THERMOSTAT	1					
20	95817–06020	BOLT, FLANGE	2					
21	1WS–12588–00	HOSE 5	1					
22	90467–170A6	CLIP	2					
23	1WS–12589–00	HOSE 6	1					
24	90467–170A6	CLIP	2					
25	1WS–12420–01	WATER PUMP ASSY	1					
26	1WS–15421–00	.COVER, CRANKCASE 2	1					MDYNM2

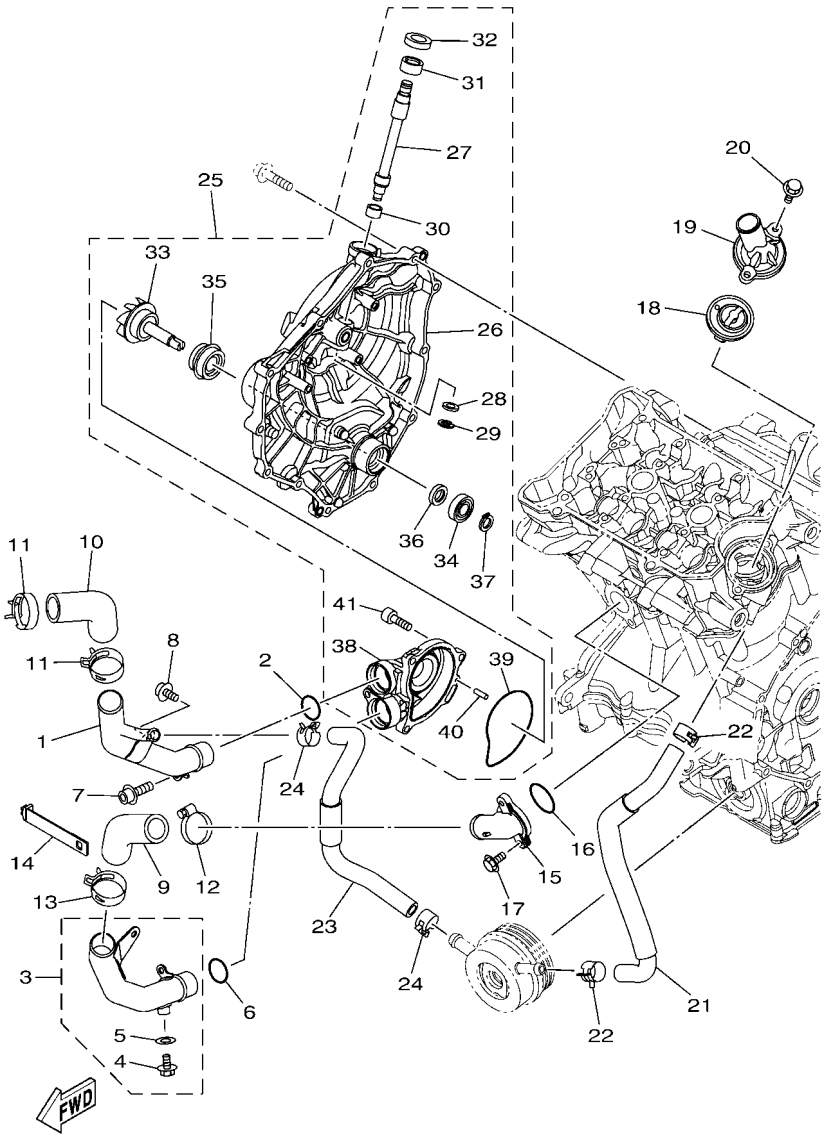

BHL1110-X050

FIG. 5 WATER PUMP

REF. NO.	PART NO.	DESCRIPTION	BYC1					REMARKS
27	2D1–16382–00	.AXLE, PUSH LEVER	1					
28	92907–08600	.WASHER, PLATE	1					
29	99001–07600	.CIRCLIP	1					
30	93317–11096	.BEARING	1					
31	93315–21570	.BEARING	1					
32	93102–15212	.OIL SEAL	1					
33	1WS–12450–00	.IMPELLER SHAFT ASSY	1					
34	93306–00106	.BEARING	1					
35	5VK–12438–00	.SEAL, MECHANICAL	1					
36	2CR–13338–00	.SEAL	1					
37	99009–12400	.CIRCLIP	1					
38	1WS–12422–00	.COVER, HOUSING	1					
39	1WS–12439–00	.O-RING	1					
40	93603–12007	.PIN, DOWEL	1					
41	90110–06274	.BOLT, HEXAGON SOCKET HEAD	3					

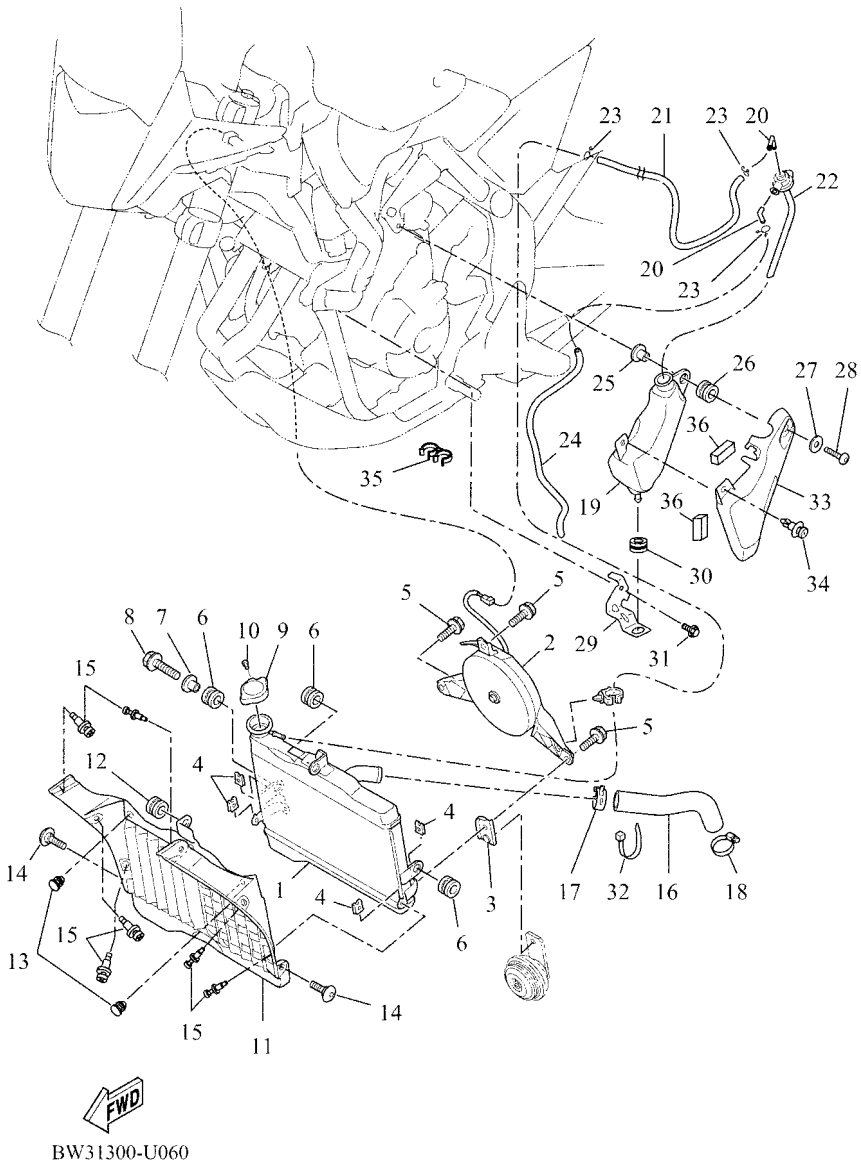

FIG. 6 RADIATOR & HOSE

REF. NO.	PART NO.	DESCRIPTION	BYC1					REMARKS
1	BW3–12461–00	RADIATOR COMP	1					
2	BW3–12405–00	BLOWER ASSY	1					
3	BW3–21343–00	BRACKET, HORN	1					
4	1WS–12671–00	NUT 1	4					
5	2S3–12675–00	BOLT, BLOWER HOLDING	3					
6	90480–15363	GROMMET	3					
7	90387–07391	COLLAR	1					
8	95802–06025	BOLT, FLANGE	1					
9	B67–12462–10	CAP, RADIATOR	1					
10	91317–03006	BOLT, HEXAGON SOCKET HEAD	1					
11	BMB–12498–00	PROTECTOR	1					
12	90480–15363	GROMMET	1					
13	90338–07043	PLUG	2					
14	90109–06320	BOLT	2					
15	90269–08010	RIVET	6					
16	BW3–12578–00	HOSE 3	1					
17	90467–290A0	CLIP	1					
18	90450–35001	HOSE CLAMP ASSY	1					
19	BMB–21871–00	TANK, RECOVERY	1					
20	26H–21828–00	ELBOW	2					
21	90445–08X13	HOSE	1					
22	2C0–21875–00	CAP	1					
23	90467–08075	CLIP	3					
24	90445–08X12	HOSE	1					
25	90387–06236	COLLAR	1					
26	90480–18411	GROMMET	1					
27	90201–06029	WASHER, PLATE	1					

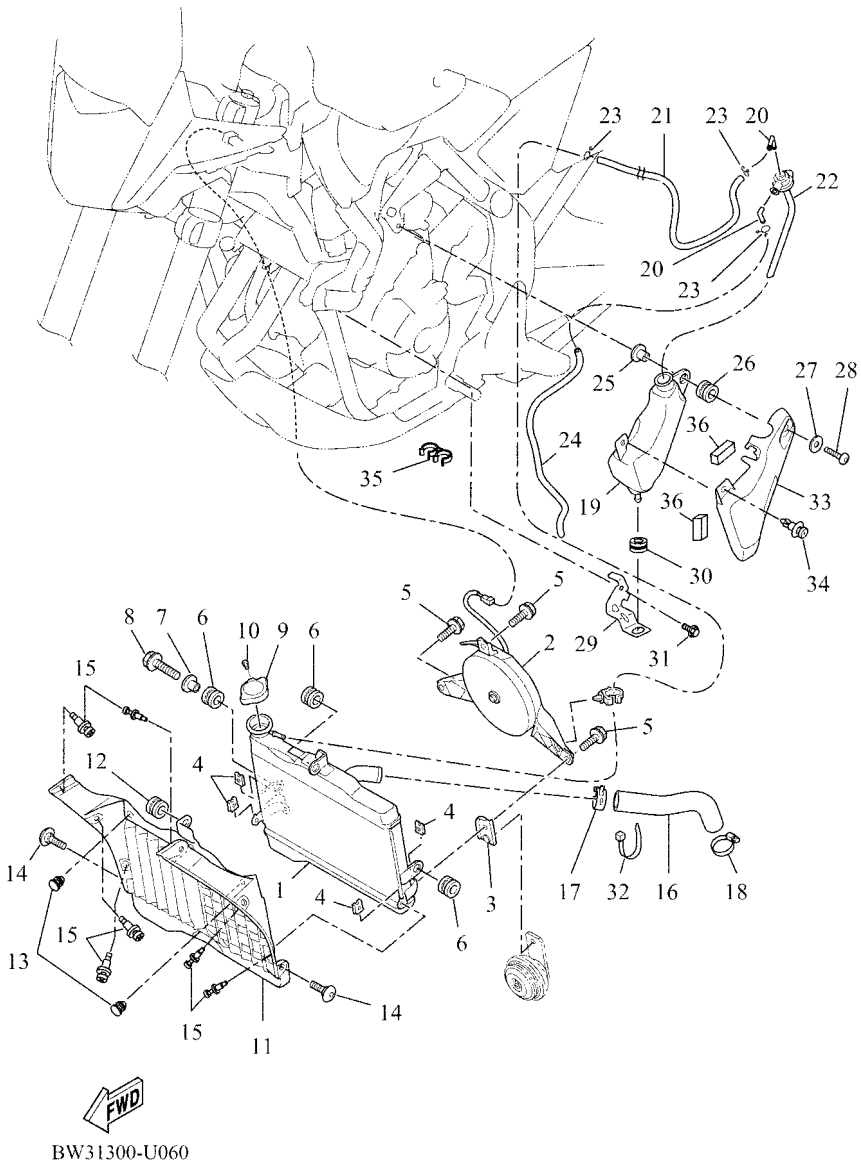

FIG. 6 RADIATOR & HOSE

REF. NO.	PART NO.	DESCRIPTION	BYC1					REMARKS
28	90111–06068	BOLT, HEXAGON SOCKET BUTTON	1					
29	BW3–21873–00	BRACKET, RECOVERY TANK	1					
30	90480–01559	GROMMET	1					
31	90110–06341	BOLT, HEXAGON SOCKET HEAD	1					
32	90464–07M40	CLAMP	1					
33	BMB–2172W–00	COVER	1					
34	90269–08010	RIVET	1					
35	90464–06008	CLAMP	1					
36	90520–05018	DAMPER, PLATE	2					

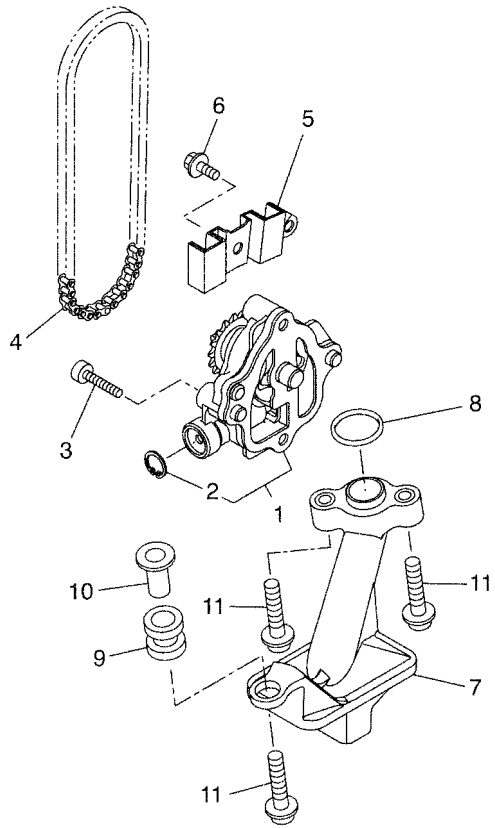

B341300-R070

FIG. 7 OIL PUMP

REF. NO.	PART NO.	DESCRIPTION	BYC1					REMARKS
1	1WS–13300–00	OIL PUMP ASSY	1					
2	99009–15500	.CIRCLIP	1					
3	95812–06040	BOLT, FLANGE	4					
4	94581–79060	CHAIN (DID25H-60LE)	1					
5	1WS–13898–00	HOLDER	1					
6	90110–06168	BOLT, HEXAGON SOCKET HEAD	2					
7	1WS–13410–00	STRAINER HOUSING ASSY	1					
8	93210–207A0	O-RING	1					
9	90480–13010	GROMMET	1					
10	5VY–13117–10	COLLAR, DISTANCE	1					
11	90110–06173	BOLT, HEXAGON SOCKET HEAD	3					

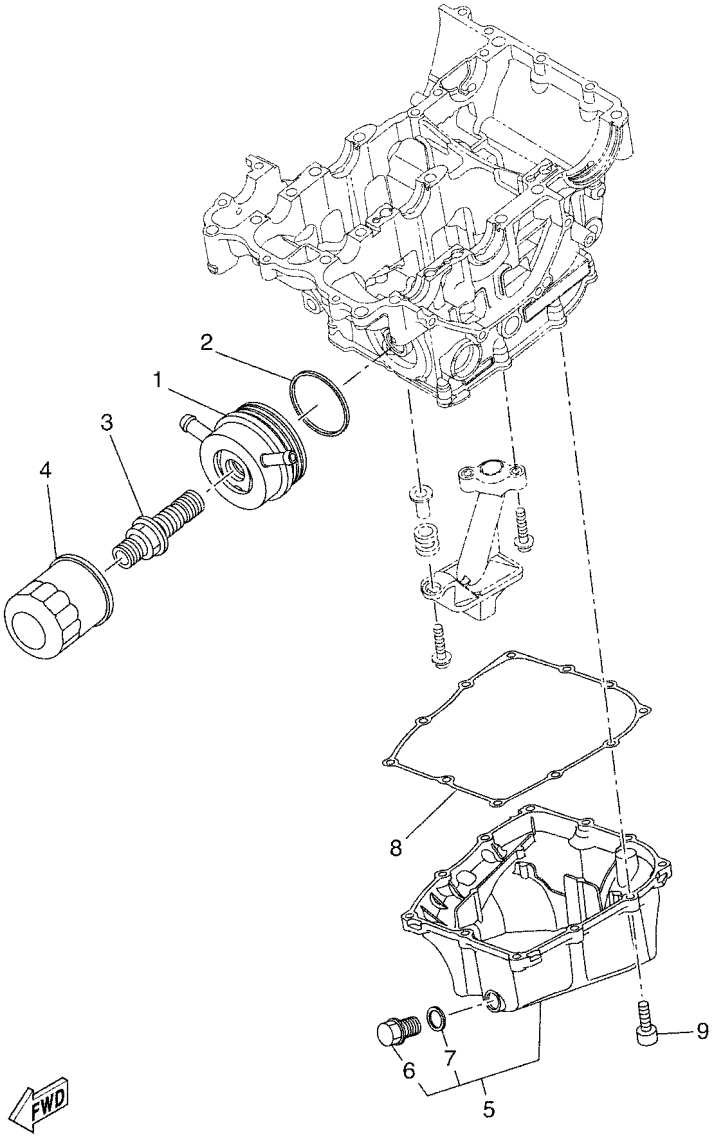

B341300-R080

FIG. 8 OIL CLEANER

REF. NO.	PART NO.	DESCRIPTION	BYC1					REMARKS
1	1WS–13470–00	OIL COOLER ASSY	1					
2	1XD–13475–00	GASKET	1					
3	90401–20009	BOLT, UNION	1					
4	5GH–13440–61	ELEMENT ASSY, OIL CLEANER	1					
5	1WS–13400–00	STRAINER COVER ASSY	1					
6	90340–14132	.PLUG, STRAIGHT SCREW	1					
7	214–11198–01	.GASKET	1					
8	1WS–13414–00	GASKET, STRAINER COVER	1					
9	91312–06030	BOLT, HEXAGON SOCKET HEAD	11					

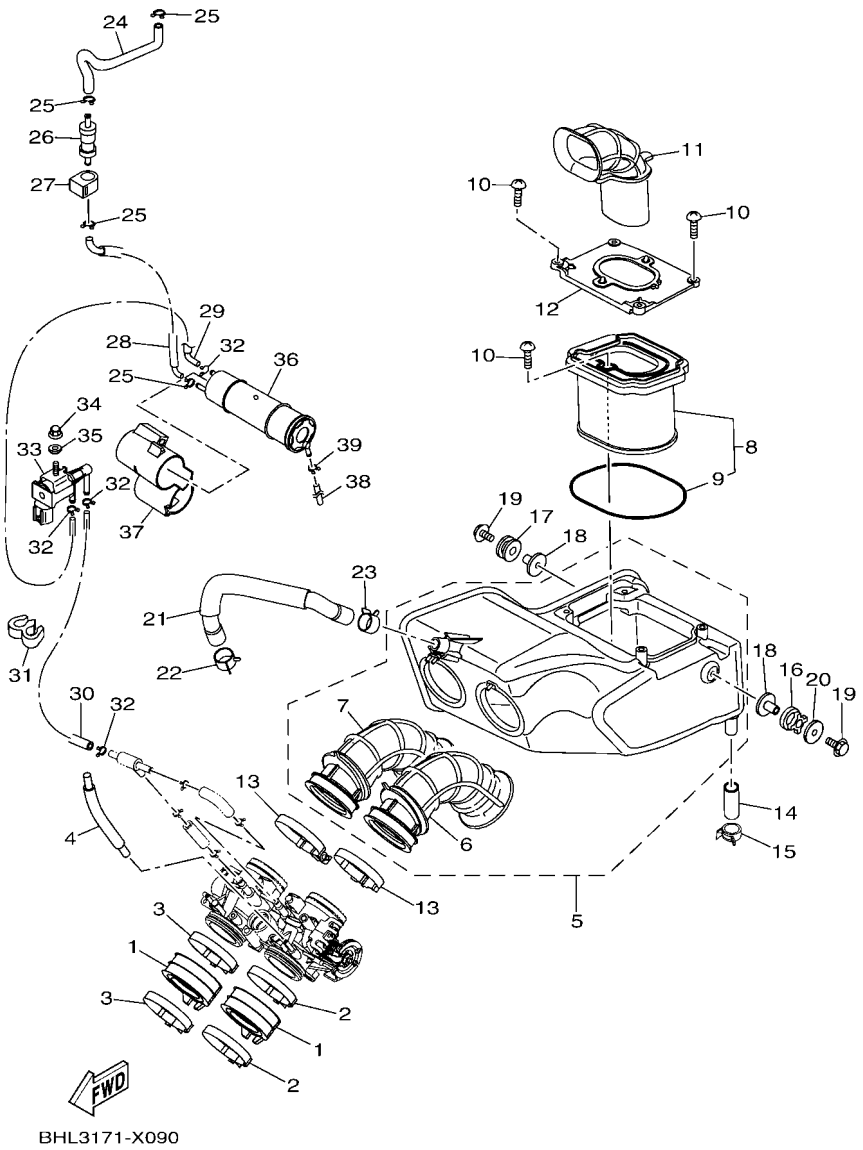

FIG. 9 INTAKE

REF. NO.	PART NO.	DESCRIPTION	BYC1					REMARKS
1	1WS–13635–00	JOINT, INTAKE 1	2					
2	90450–56011	HOSE CLAMP ASSY	2					
3	90450–56012	HOSE CLAMP ASSY	2					
4	BEH–13542–00	HOSE, VACUUM SENSING 1	1					
5	BW3–14401–02	AIR CLEANER CASE ASSY	1					
6	BW3–14469–01	.FUNNEL, AIR	1					
7	BW3–1446C–01	.FUNNEL 2	1					
8	1WS–14450–00	ELEMENT ASSY, AIR CLEANER	1					
9	1WS–14452–00	.SEAL	1					
10	90160–05013	SCREW, ROUND TAPPING	5					
11	BW3–14437–01	DUCT	1					
12	BW3–14468–01	PLATE,ELEMENT FITTING	1					
13	90450–56011	HOSE CLAMP ASSY	2					
14	1WS–1443E–00	PIPE, DRAIN	1					
15	90467–13083	CLIP	1					
16	90480–15001	GROMMET	1					
17	90480–15014	GROMMET	1					
18	90387–06300	COLLAR	2					
19	95817–06025	BOLT, FLANGE	2					
20	90201–064K6	WASHER, PLATE	1					
21	BAU–11166–00	PIPE, BREATHER 1	1					
22	90467–17128	CLIP	1					
23	90467–160A2	CLIP	1					
24	BW3–24321–00	PIPE 10	1					
25	90467–090A2	CLIP	4					
26	5PX–24180–00	ROLL OVER VALVE ASSY	1					
27	BAU–24135–00	CLAMP 1	1					

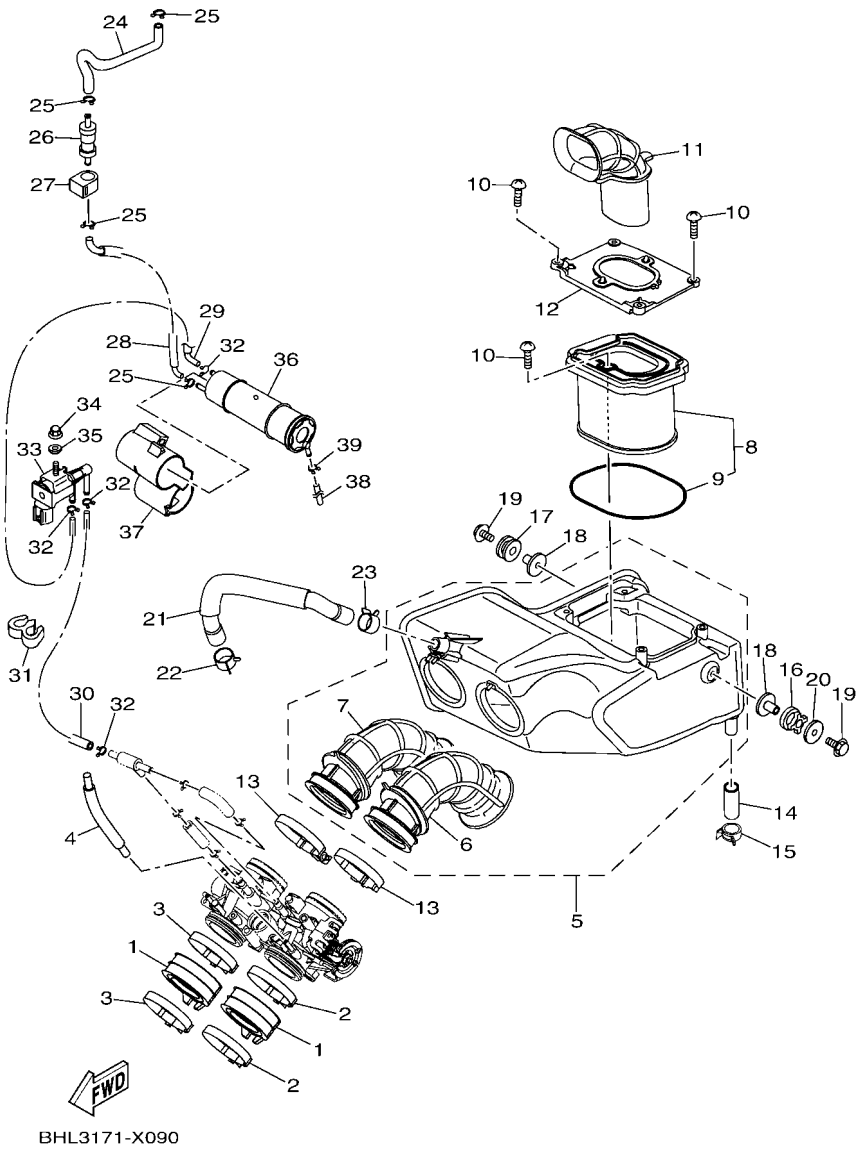

FIG. 9 INTAKE

REF. NO.	PART NO.	DESCRIPTION	BYC1					REMARKS
28	2RC–24322–00	PIPE 11	1					
29	BEH–243A1–00	PIPE 15	1					
30	BEH–243A2–00	PIPE 16	1					
31	90464–09M31	CLAMP	1					
32	90467–090A2	CLIP	4					
33	BG4–86120–00	SOLENOID VALVE ASSY	1					
34	90176–06008	NUT, CAP	1					
35	90387–06130	COLLAR	1					
36	BW3–F4170–00	CANISTER ASSY	1					
37	2RC–24182–00	DAMPER, LOCATING 2	1					
38	BW3–24324–00	PIPE 13	1					
39	90467–090A2	CLIP	1					

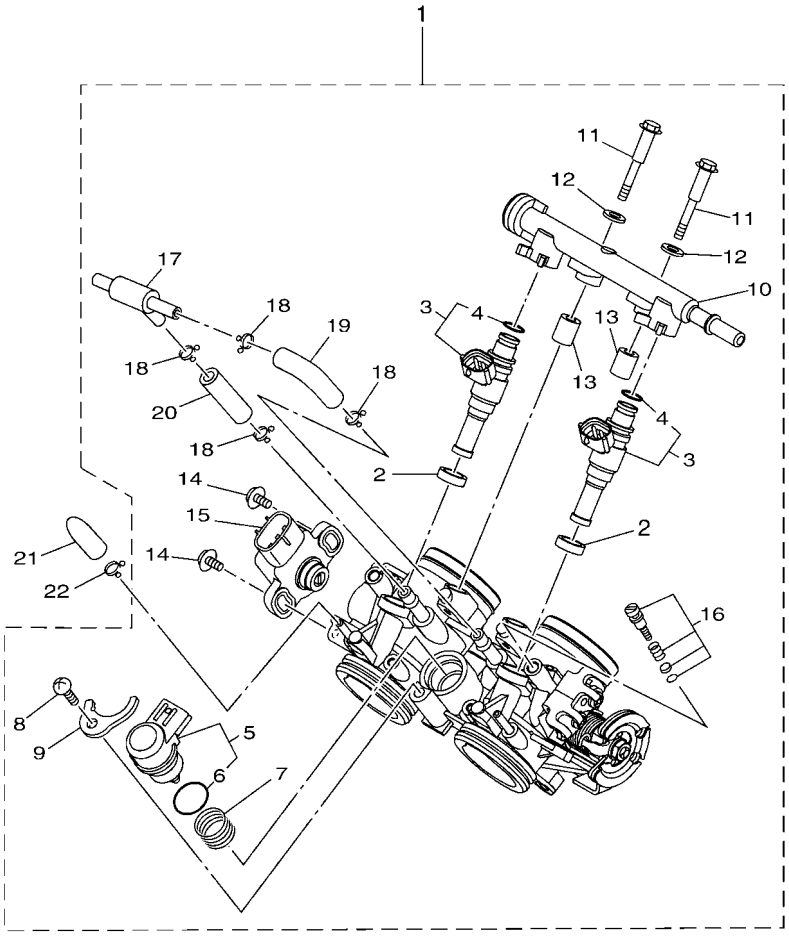

BHL1110-X100

FIG. 10 INTAKE 2

REF. NO.	PART NO.	DESCRIPTION	BYC1					REMARKS
1	1WS–13750–52	THROTTLE BODY ASSY	1					
2	8FP–13556–00	.RUBBER, INJECTOR	2					
3	1WS–13761–00	.INJECTOR	2					
4	5PS–14147–00	..O-RING	1					
5	1WS–85801–01	.STEPPING MOTOR	1					
6	54P–E416A–00	..O-RING	1					
7	1WS–14335–00	.SPRING, PLUNGER	1					
8	98502–06012	.SCREW, PAN HEAD	1					
9	54P–14243–00	.PLATE	1					
10	1WS–13938–10	.PIPE	1					
11	8HG–13573–00	.BOLT 1	2					
12	8GL–13571–00	.WASHER	2					
13	8HG–14534–00	.COLLAR	2					
14	8CC–14216–10	.SCREW	2					
15	3B4–85885–01	.THROTTLE SENSOR ASSY	1					
16	2C0–14105–00	.PILOT SCREW SET	2					
17	90413–06031	.WAY 3	1					
18	90467–090A2	.CLIP	4					
19	1WS–14465–00	.PIPE	1					
20	14B–14466–00	.PIPE	1					
21	895–14169–00	CAP	1					
22	8A7–14139–00	CLIP, PIPE	1					

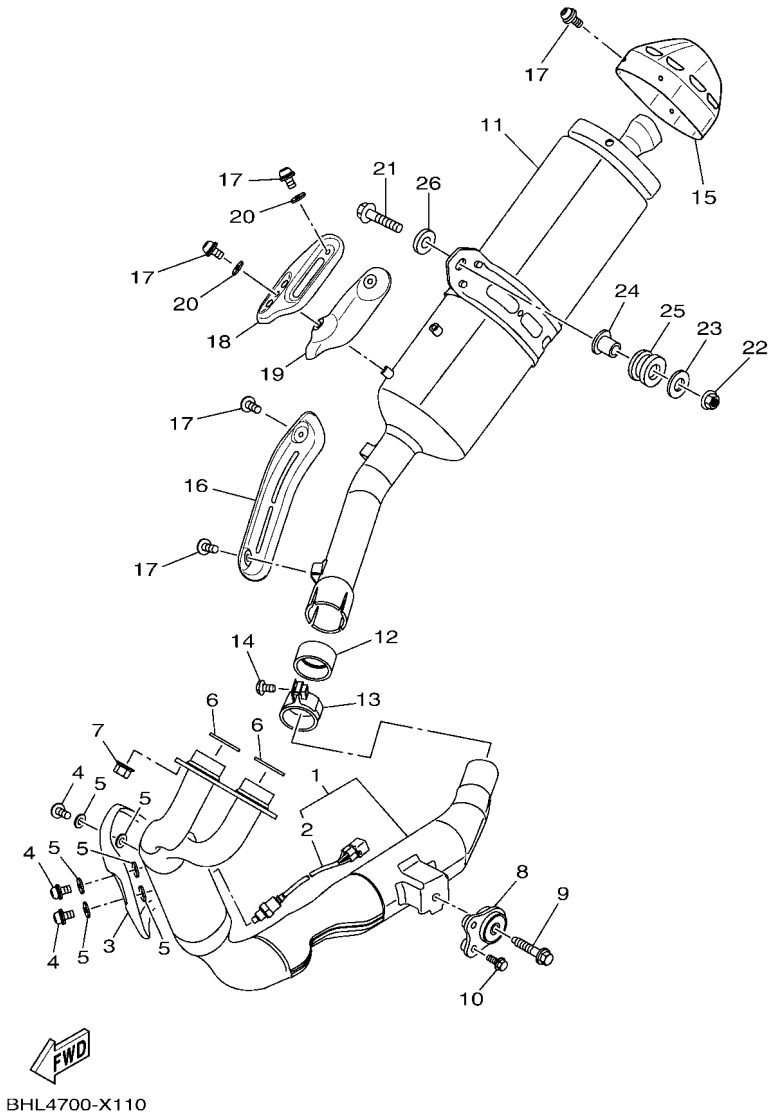

FIG. 11 EXHAUST

REF. NO.	PART NO.	DESCRIPTION	BYC1					REMARKS
1	BEH–14610–10	EXHAUST PIPE ASSY 1	1					
2	2CR–8592A–20	.SENSOR, OXYGEN	1					
3	BEH–E460B–00	PROTECTOR, MUFFLER	1					
4	90111–06187	BOLT, HEXAGON SOCKET BUTTON	3					
5	4BD–14766–00	WASHER, PROTECTOR	6					
6	3YF–14613–01	GASKET, EXHAUST PIPE	2					
7	90179–08410	NUT	4					
8	BW3–21445–00	STAY, MUFFLER 1	1					
9	90105–08164	BOLT, FLANGE	1					
10	95814–06020	BOLT, FLANGE	2					
11	BEH–E4711–01	MUFFLER 1	1					
12	B71–14755–00	GASKET, SILENCER	1					
13	5S7–14715–00	BAND, MUFFLER	1					
14	91314–08040	BOLT, HEXAGON SOCKET HEAD	1					
15	BW3–E4799–00	CAP	1					
16	BW3–E471C–00	PROTECTOR ASSY 1	1					
17	90111–06060	BOLT, HEXAGON SOCKET BUTTON	8					
18	BW3–E472C–00	PROTECTOR ASSY., 2	1					
19	BW3–E4738–00	PROTECTOR, MUFFLER 3	1					
20	4BD–14766–00	WASHER, PROTECTOR	2					
21	90111–10007	BOLT, HEXAGON SOCKET BUTTON	1					
22	95604–10200	NUT, SELF-LOCKING	1					
23	90201–10043	WASHER, PLATE	1					
24	90387–10636	COLLAR	1					
25	36Y–27424–01	DAMPER, FOOTREST 2	1					
26	BW3–14779–00	COLLAR	1					

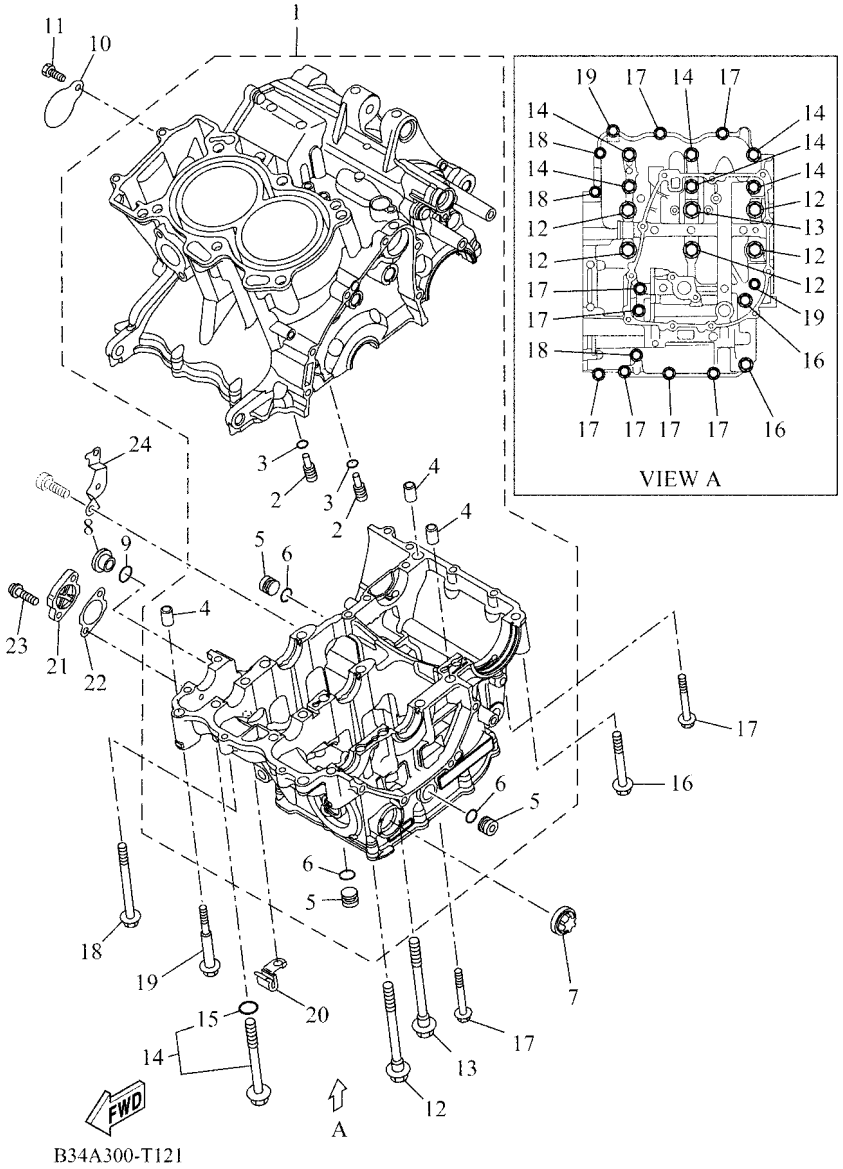

FIG. 12 CRANKCASE

REF. NO.	PART NO.	DESCRIPTION	BYC1					REMARKS
1	1WS–15100–08	CRANKCASE ASSY	1					MBL2
2	5EB–15155–00	.NOZZLE 3	2					
3	93210–04092	.O-RING	2					
4	99530–10014	.PIN, DOWEL	3					
5	90338–16262	.PLUG	3					
6	93210–12790	.O-RING	3					
7	2H7–15361–00	GAUGE, LEVEL	1					
8	36Y–15189–00	PLUG	1					
9	93210–16325	O-RING	1					
10	1WS–15189–00	PLUG	1					
11	90101–06043	BOLT	1					
12	90119–09014	BOLT, WITH WASHER	5					(M9X1.25 - 80mm)
13	90119–09018	BOLT, WITH WASHER	1					(M9X1.25 - 90mm)
14	1WS–15156–00	BOLT, CRANKCASE JOURNAL	6					
15	93210–07540	.O-RING	1					
16	95812–08065	BOLT, FLANGE	2					
17	95812–06040	BOLT, FLANGE	8					
18	95812–06060	BOLT, FLANGE	3					
19	90109–06100	BOLT	2					
20	90462–08102	CLAMP	1					
21	1WS–15416–00	COVER, OIL PUMP	1					MBL2
22	1WS–15456–01	GASKET, OIL PUMP COVER 1	1					
23	90110–06395	BOLT, HEXAGON SOCKET HEAD	2					
24	1WS–15128–00	HOLDER	1					

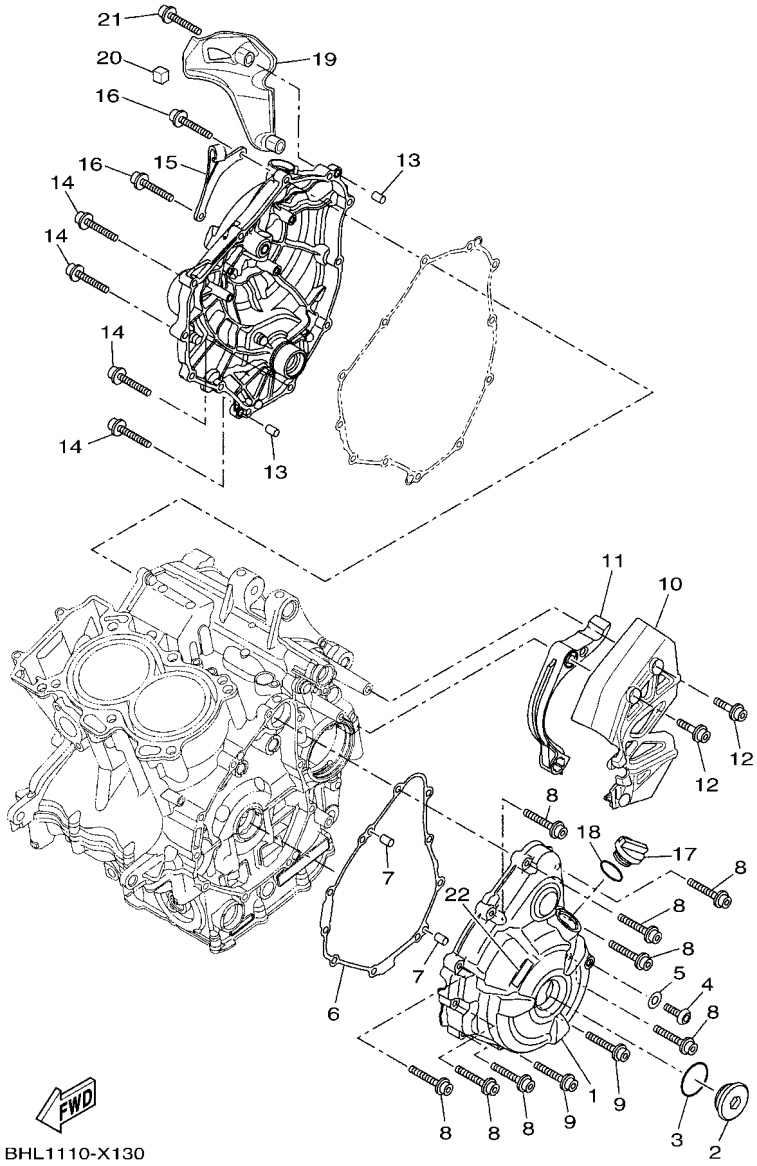

FIG. 13 CRANKCASE COVER 1

REF. NO.	PART NO.	DESCRIPTION	BYC1					REMARKS
1	1WS–15411–00	COVER, CRANKCASE 1	1					MDYNM2
2	90340–36005	PLUG, STRAIGHT SCREW	1					
3	93210–357A3	O-RING	1					
4	92017–08012	BOLT, BUTTON HEAD	1					
5	90430–08143	GASKET	1					
6	1WS–15451–00	GASKET, CRANKCASE COVER 1	1					
7	99530–08012	PIN, DOWEL	2					
8	90110–06388	BOLT, HEXAGON SOCKET HEAD	8					
9	90110–06389	BOLT, HEXAGON SOCKET HEAD	2					
10	BMB–15418–00	COVER, CHAIN CASE	1					
11	1WS–15377–00	GUIDE, INLET	1					
12	90110–06396	BOLT, HEXAGON SOCKET HEAD	3					
13	99530–08012	PIN, DOWEL	2					
14	90110–06388	BOLT, HEXAGON SOCKET HEAD	8					
15	1WS–15441–00	HOLDER, CLUTCH CABLE	1					
16	90110–06389	BOLT, HEXAGON SOCKET HEAD	2					
17	3F9–15362–10	PLUG, OIL LEVEL	1					
18	93210–27194	O-RING	1					
19	BW3–15499–00	PROTECTOR, COVER	1					
20	90520–10010	DAMPER, PLATE	1					
21	90110–06049	BOLT, HEXAGON SOCKET HEAD	2					
22	B5Y–1548B–00	OIL, LABEL	1					

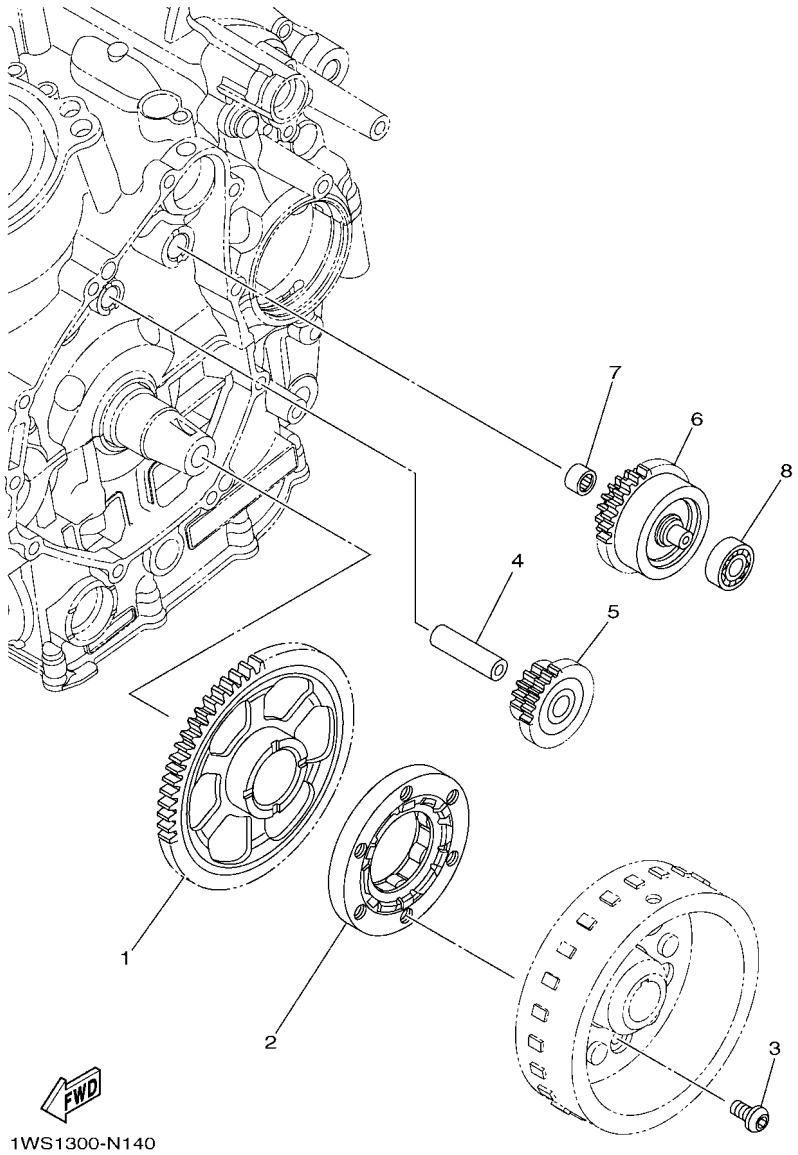

FIG. 14 STARTER

REF. NO.	PART NO.	DESCRIPTION	BYC1					REMARKS
1	1WS–15515–00	GEAR 3	1					
2	1WS–15590–00	STARTER ONE-WAY ASSY	1					
3	90149–08030	SCREW	3					
4	23P–15521–00	SHAFT 1	1					
5	1WS–15512–00	GEAR, IDLER 1	1					
6	1WS–15560–00	DAMPER ASSY	1					
7	93317–11096	BEARING	1					
8	93306–00006	BEARING	1					

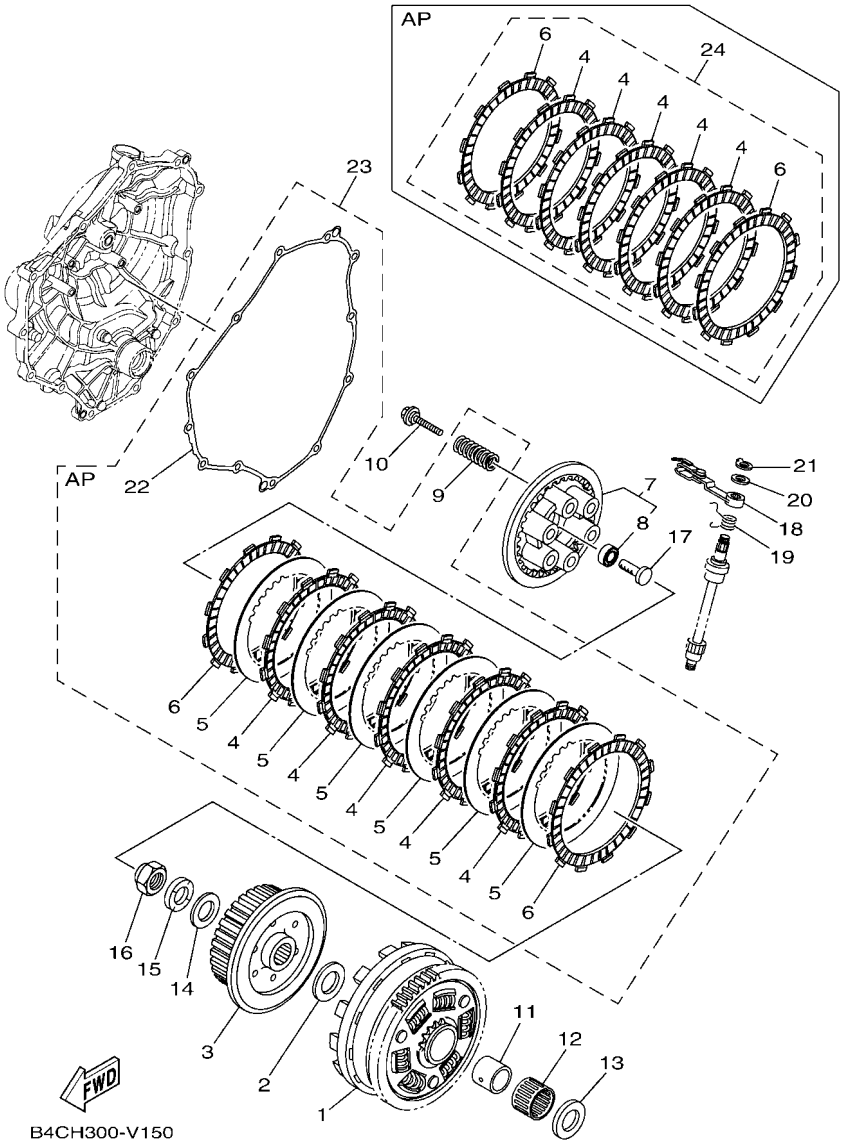

FIG. 15 CLUTCH

REF. NO.	PART NO.	DESCRIPTION	BYC1					REMARKS
1	1WS–16150–00	PRIMARY DRIVEN GEAR COMP.	1					
2	363–16154–00	PLATE, THRUST 1	1					
3	1WS–16371–01	BOSS, CLUTCH	1					
4	5VY–16321–00	PLATE, FRICTION	5					
5	5VY–16325–10	PLATE, CLUTCH 2	6					(T2.0)
6	5TG–16321–00	PLATE, FRICTION	2					
7	1WS–16350–00	PRESSURE PLATE ASSY	1					
8	93306–00106	.BEARING	1					
9	90501–230E4	SPRING, COMPRESSION	6					
10	90119–06263	BOLT, WITH WASHER	6					
11	1WS–16181–00	SPACER 1	1					
12	93310–232R9	BEARING	1					
13	363–16154–00	PLATE, THRUST 1	1					
14	90201–20030	WASHER, PLATE	1					
15	90208–20001	WASHER, CONICAL SPRING	1					
16	90179–20007	NUT	1					
17	1WS–16356–00	ROD, PUSH 1	1					
18	1WS–16340–00	PUSH LEVER ASSY	1					
19	90508–18132	SPRING, TORSION	1					
20	90201–10029	WASHER, PLATE	1					
21	99009–10400	CIRCLIP	1					
22	1WS–15461–00	GASKET, CRANKCASE COVER 2	1					
23	1WS–W001G–10	CLUTCH PLATE KIT	1					AP
24	B4C–W001M–00	FRICTION PLATE KIT	1					AP

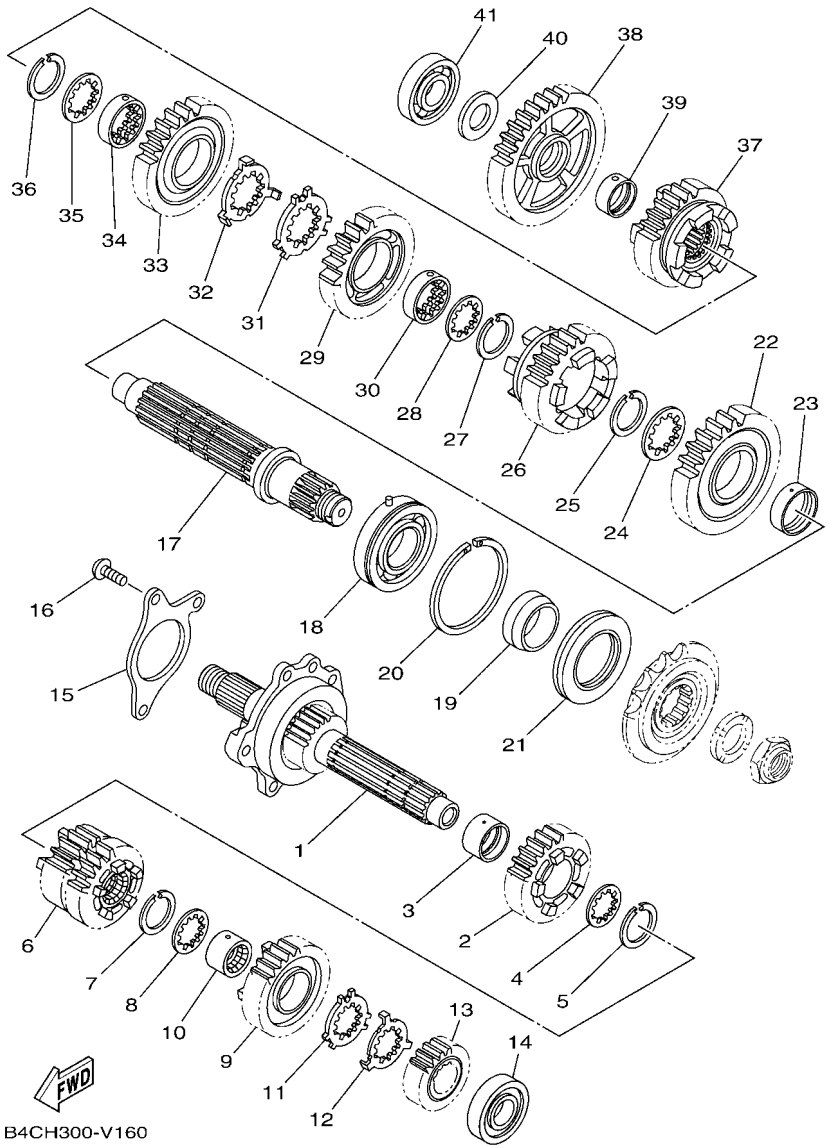

FIG. 16 TRANSMISSION

REF. NO.	PART NO.	DESCRIPTION	BYC1					REMARKS
1	1WS–17401–00	MAIN AXLE ASSY	1					
2	1WS–17151–00	GEAR, 5TH PINION (22T)	1					
3	90387–250R3	COLLAR	1					
4	90209–21332	WASHER	1					
5	93440–25186	CIRCLIP	1					
6	1WS–17131–00	GEAR, 3RD PINION (20T/19T)	1					UR
	BU3–E7131–00	GEAR, 3RD PINION (20T/19T)	1					UR
7	93440–25186	CIRCLIP	1					
8	90209–21332	WASHER	1					
9	BAT–17161–00	GEAR, 6TH PINION (28T)	1					
10	90387–21003	COLLAR	1					
11	90209–22352	WASHER	1					
12	90209–21351	WASHER	1					
13	1WS–17121–00	GEAR, 2ND PINION (16T)	1					
14	93306–20464	BEARING	1					
15	1WS–17446–00	PLATE	1					
16	90149–06189	SCREW	3					
17	1WS–17421–00	AXLE, DRIVE	1					
18	93306–20663	BEARING	1					
19	90387–30012	COLLAR	1					
20	93440–64199	CIRCLIP	1					
21	93102–40030	OIL SEAL	1					
22	1WS–17221–00	GEAR, 2ND WHEEL (34T)	1					
23	90387–31003	COLLAR	1					
24	90209–28008	WASHER	1					
25	93440–31187	CIRCLIP	1					
26	BAT–17261–00	GEAR, 6TH WHEEL (27T)	1					UR

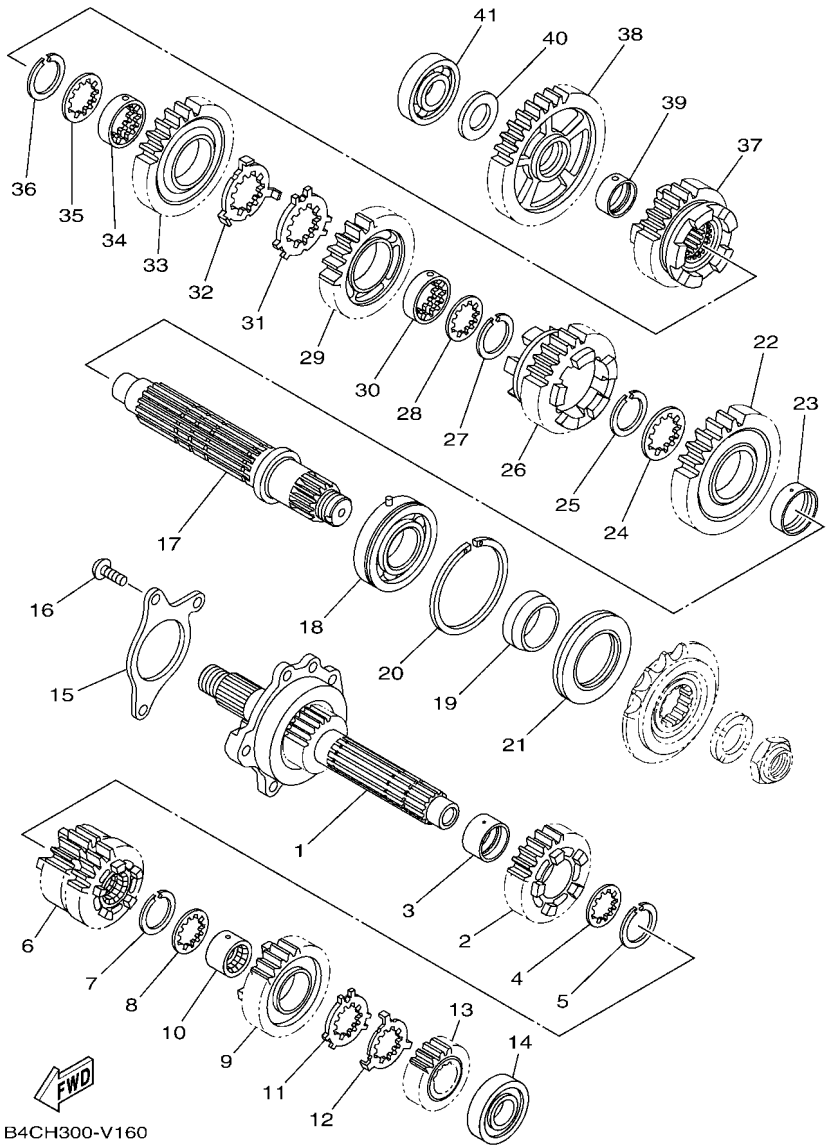

FIG. 16 TRANSMISSION

REF. NO.	PART NO.	DESCRIPTION	BYC1					REMARKS
26	B4T–E7261–00	GEAR, 6TH WHEEL (27T)	1					UR
27	93440–31187	CIRCLIP	1					
28	90209–28008	WASHER	1					
29	1WS–17241–00	GEAR, 4TH WHEEL (26T)	1					
30	90387–28004	COLLAR	1					
31	90214–29002	WASHER, CLAW	1					
32	90214–28002	WASHER, CLAW	1					
33	1WS–17231–00	GEAR, 3RD WHEEL (31T)	1					
34	90387–28004	COLLAR	1					
35	90209–28008	WASHER	1					
36	93440–31187	CIRCLIP	1					
37	BAT–17251–00	GEAR, 5TH WHEEL (24T)	1					UR
	B4T–E7251–00	GEAR, 5TH WHEEL (24T)	1					UR
38	1WS–17211–00	GEAR, 1ST WHEEL (37T)	1					
39	90387–25008	COLLAR	1					
40	90201–20008	WASHER, PLATE	1					
41	93306–20464	BEARING	1					

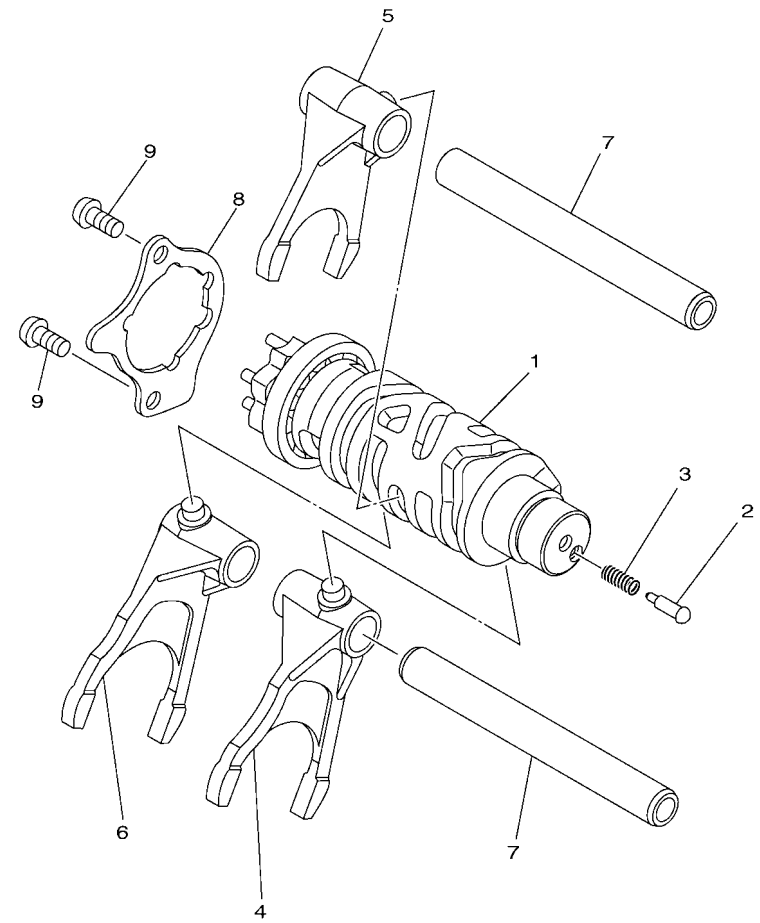

1WS1300-N170

FIG. 17 SHIFT CAM & FORK

REF. NO.	PART NO.	DESCRIPTION	BYC1					REMARKS
1	1WS–18540–00	SHIFT CAM ASSY	1					
2	3D7–18542–00	POINT, NEUTRAL	1					
3	90501–06022	SPRING, COMPRESSION	1					
4	1WS–18511–00	FORK, SHIFT 1	1					
5	1WS–18512–00	FORK, SHIFT 2	1					
6	1WS–18513–00	FORK, SHIFT 3	1					
7	20S–18535–00	BAR, SHIFT FORK GUIDE 2	2					
8	1WS–18536–00	STOPPER, SHIFT BAR	1					
9	90149–06158	SCREW	2					

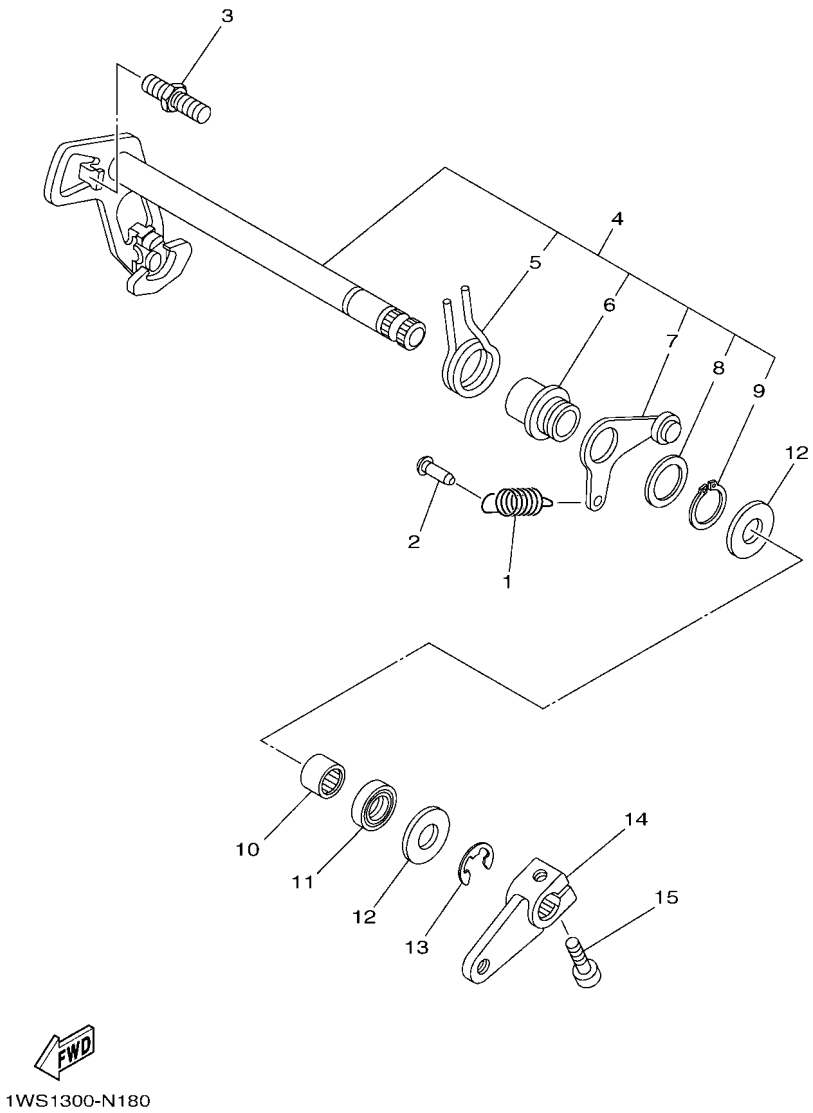

FIG. 18 SHIFT SHAFT

REF. NO.	PART NO.	DESCRIPTION	BYC1					REMARKS
1	90506–18021	SPRING, TENSION	1					
2	132–16346–00	HOOK, SPRING	1					
3	1D7–18127–00	STOPPER, SCREW	1					
4	1WS–18101–00	SHIFT SHAFT ASSY	1					
5	90508–29040	.SPRING, TORSION	1					
6	2C0–18175–00	.SPACER	1					
7	1WS–18140–00	.STOPPER LEVER ASSY	1					
8	90201–177G4	.WASHER, PLATE	1					
9	99009–17400	.CIRCLIP	1					
10	93317–11295	BEARING	1					
11	93102–12106	OIL SEAL (SD 12-22-5 HS)	1					
12	90201–12575	WASHER, PLATE	2					
13	99002–10600	CIRCLIP	1					
14	1WS–18112–00	ARM, SHIFT	1					
15	91317–06020	BOLT, HEXAGON SOCKET HEAD	1					

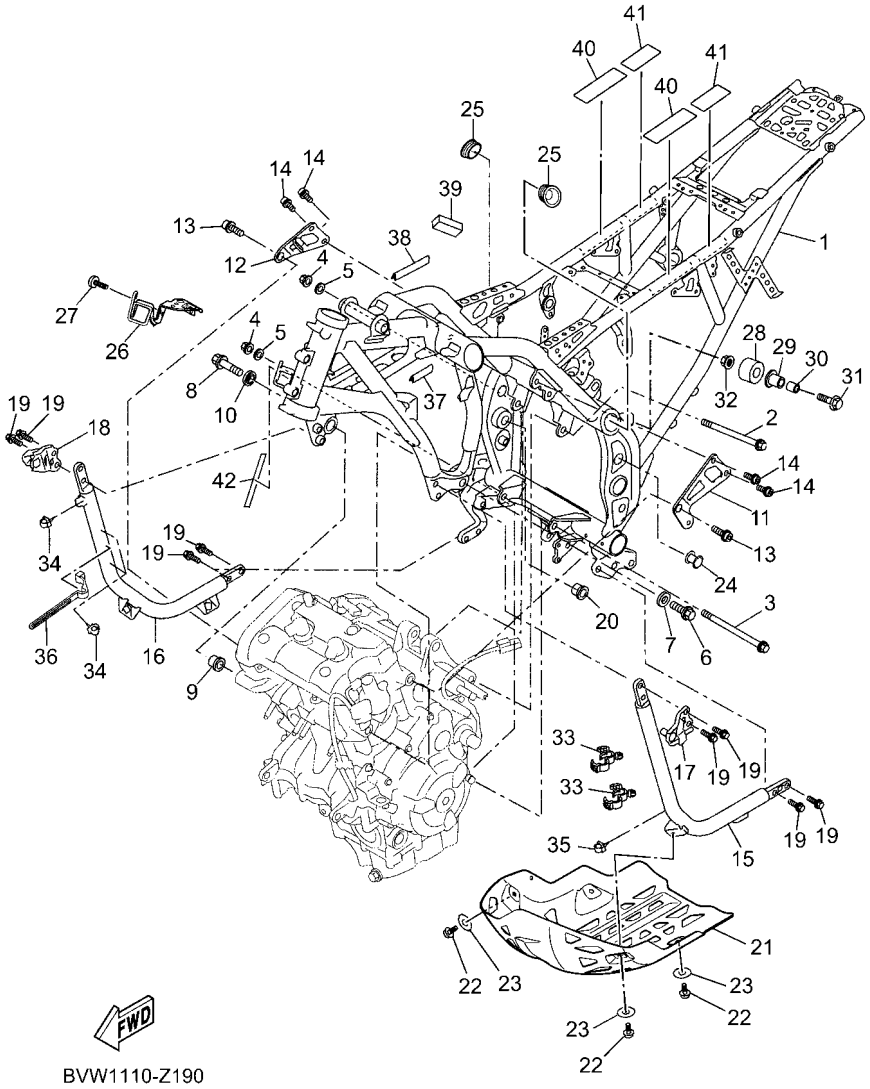

BVW1110-Z190

FIG. 19 FRAME

REF. NO.	PART NO.	DESCRIPTION	BYC1					REMARKS
1	BAU–21110–00	FRAME COMP.	1					MBL2
2	90105–10219	BOLT, FLANGE	1					
3	90105–10349	BOLT, FLANGE	1					
4	90179–10024	NUT	2					
5	90201–10035	WASHER, PLATE	2					
6	90105–12092	BOLT, FLANGE	1					
7	90201–13020	WASHER, PLATE	1					
8	90105–12104	BOLT, FLANGE	1					
9	BMB–21495–00	BOLT, ENGINE ADJUSTING	1					
10	90387–14026	COLLAR	1					
11	BW3–21315–00	STAY, ENGINE 1	1					
12	BW3–21316–00	STAY, ENGINE 2	1					
13	90110–10012	BOLT, HEXAGON SOCKET HEAD	2					
14	90110–08111	BOLT, HEXAGON SOCKET HEAD	4					
15	BW3–21102–00	SIDE MEMBER SUB-ASSY 1	1					
16	BW3–21103–00	SIDE MEMBER SUB-ASSY 2	1					
17	BMB–2142L–00	BRACKET, RADIATOR 2	1					
18	BMB–2142M–00	BRACKET, RADIATOR 3	1					
19	90105–08274	BOLT, FLANGE	8					
20	BMB–21494–00	NUT	1					
21	BMB–21471–00	PROTECTOR, ENGINE	1					
22	90105–06064	BOLT, FLANGE	4					
23	90201–06120	WASHER, PLATE	4					
24	90338–15803	PLUG	4					
25	BW3–F1399–10	CAP	2					
26	BW3–21288–10	GUIDE, CABLE	1					
27	90111–06864	BOLT, HEXAGON SOCKET BUTTON	1					

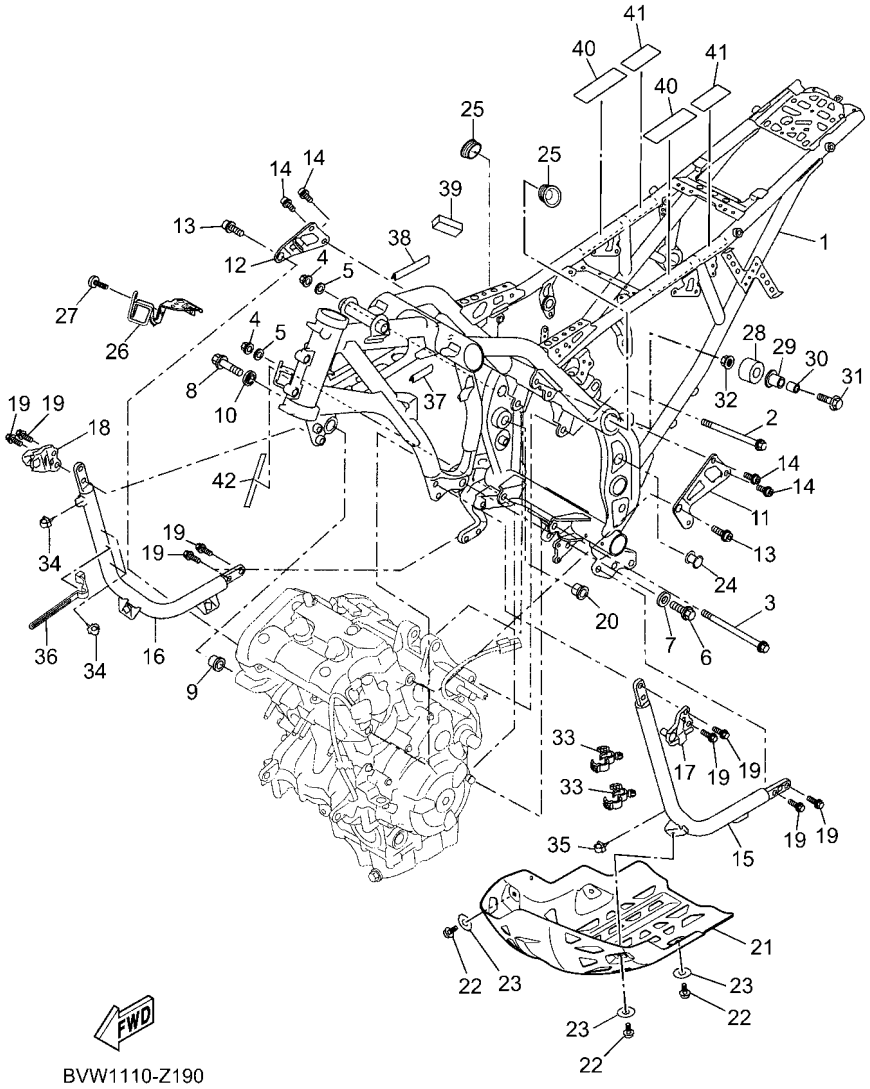

BVW1110-Z190

FIG. 19 FRAME

REF. NO.	PART NO.	DESCRIPTION	BYC1					REMARKS
28	30X–22178–00	TENSIONER	1					
29	10V–22184–00	BUSH	1					
30	90387–08120	COLLAR	1					
31	95814–08045	BOLT, FLANGE	1					
32	95602–08200	NUT, U FLANGE	1					
33	90464–18246	CLAMP	2					
34	90464–10800	CLAMP	3					
35	90464–10800	CLAMP	1					
36	90464–07M40	CLAMP	1					
37	31A–24188–01	MOLD, FUEL TANK	2					
38	2D1–24785–00	MOLE, SEAT	1					
39	90520–02837	DAMPER, PLATE	1					
40	BAU–2117G–00	PROTECTOR	2					
41	BAU–2117G–10	PROTECTOR	2					
42	3HA–24141–00	PROTECTOR, FUEL TANK	1					

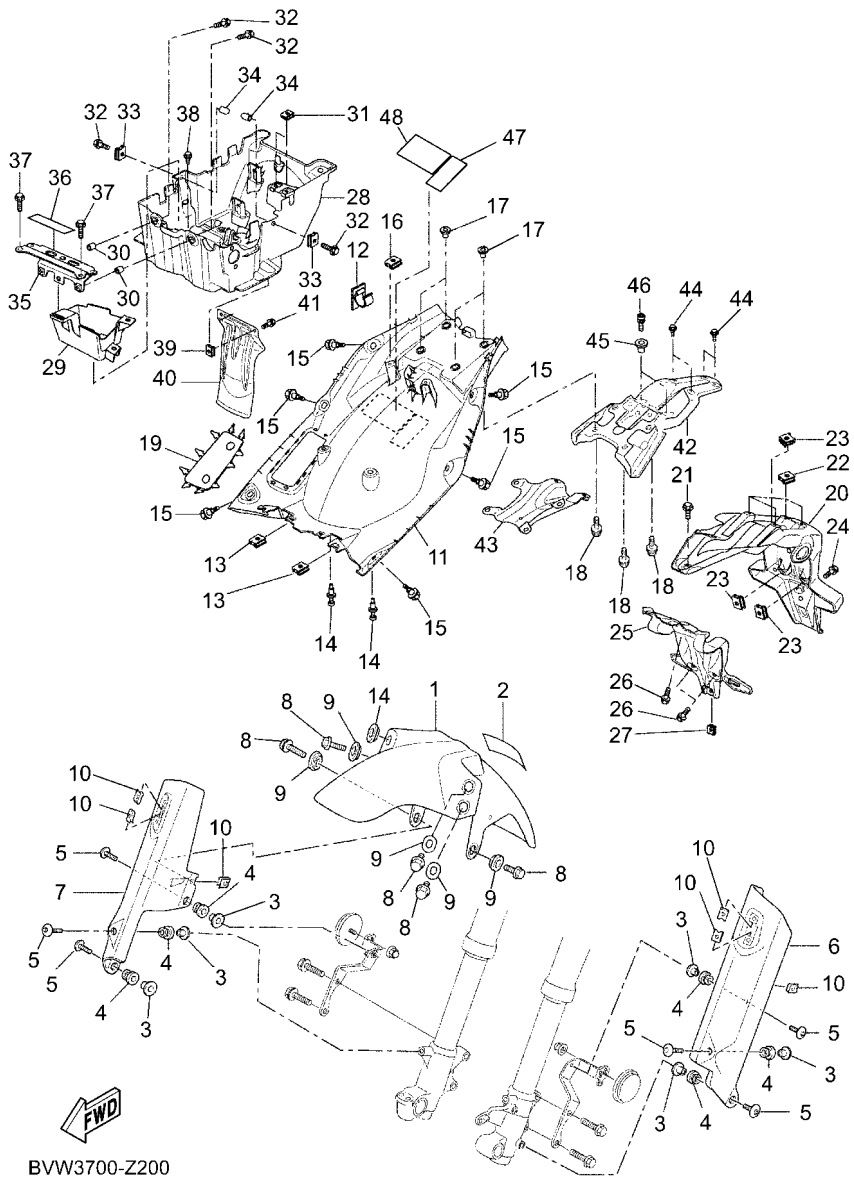

FIG. 20 FENDER

REF. NO.	PART NO.	DESCRIPTION	BYC1					REMARKS
1	BMB–21511–00–P0	FENDER, FRONT	1					MBL2 FOR DPBMC
2	BAU–2414G–00	SEAL	1					
3	90387–06265	COLLAR	6					
4	90480–12072	GROMMET	6					
5	90111–06155	BOLT, HEXAGON SOCKET BUTTON	6					
6	BMB–2315H–00	PROTECTOR 1	1					
7	BMB–2315J–00	PROTECTOR 2	1					
8	90105–06170	BOLT, FLANGE	6					
9	17D–21749–00	COLLAR	6					
10	90183–060A6	NUT, SPRING	6					
11	BMB–21629–00	GUARD, MUD	1					
12	90464–13185	CLAMP	1					
13	90183–05076	NUT, SPRING	2					
14	90269–08010	RIVET	2					
15	90149–05042	SCREW	6					
16	90183–05076	NUT, SPRING	2					
17	90387–08073	COLLAR	4					
18	90119–06179	BOLT, WITH WASHER	4					
19	BW3–F1669–01	SEAL	1					
20	BMB–21685–00	BRACKET, LICENSE	1					
21	90149–05042	SCREW	1					
22	90183–05076	NUT, SPRING	4					
23	90183–05076	NUT, SPRING	3					
24	90149–05042	SCREW	1					
25	BMB–2163A–00	COVER, REAR FENDER 1	1					
26	90149–05042	SCREW	3					
27	90183–05076	NUT, SPRING	1					

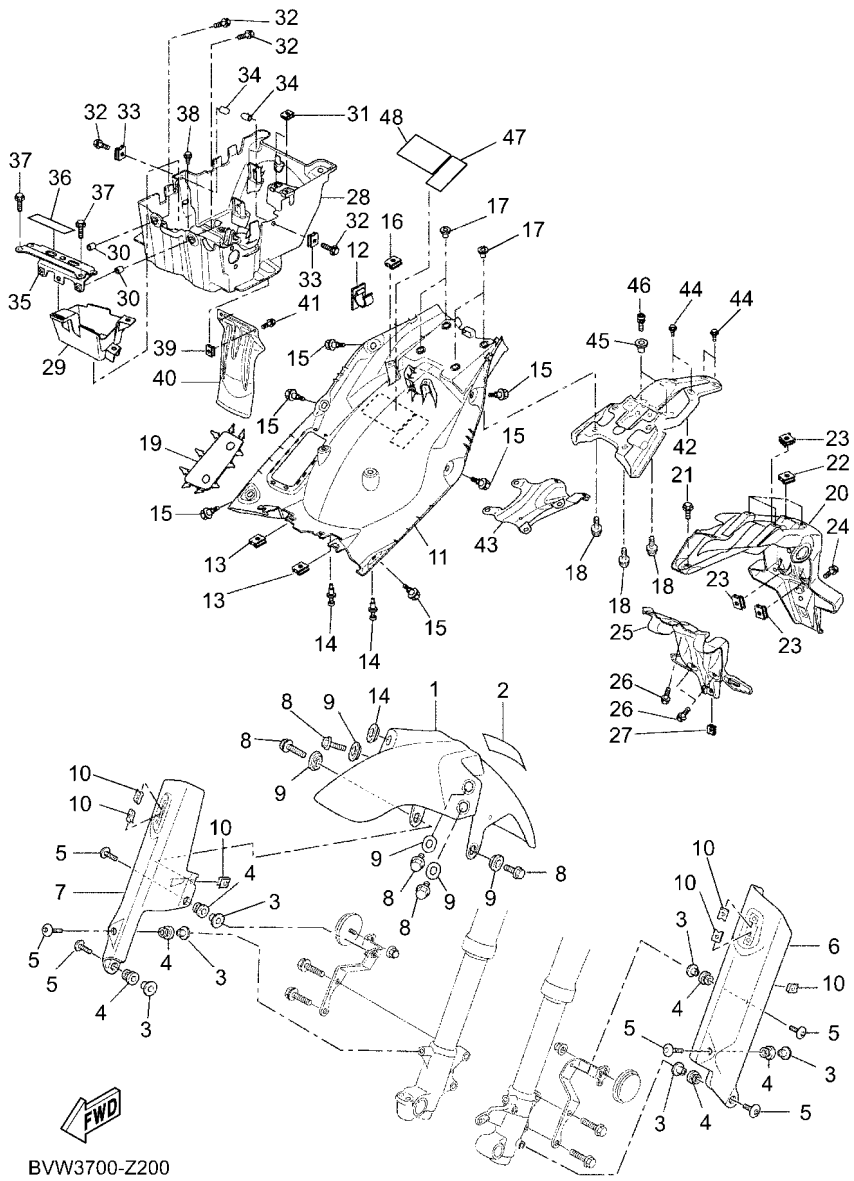

FIG. 20 FENDER

REF. NO.	PART NO.	DESCRIPTION	BYC1					REMARKS
28	BMB–8212B–00	BOX, BATTERY 1	1					
29	BNW–F177G–00	BOX, BATTERY	1					
30	90387–07015	COLLAR	2					
31	90183–04039	NUT, SPRING	2					
32	90105–06080	BOLT, FLANGE	4					
33	90183–060A6	NUT, SPRING	2					
34	BC3–28349–00	CAP	2					
35	BW3–21617–20	BRACKET, FENDER	1					
36	3HA–24141–00	PROTECTOR, FUEL TANK	1					
37	95827–06012	BOLT, FLANGE	4					
38	90149–05042	SCREW	2					
39	90183–05076	NUT, SPRING	2					
40	BW3–F1642–00	GUARD, FLAP	1					
41	90149–05045	SCREW	2					
42	BMB–21613–00	STAY, FENDER 1	1					
43	BW3–21671–00	REINF., REAR FENDER	1					
44	90149–05042	SCREW	4					
45	90387–06359	COLLAR	2					
46	90110–06340	BOLT, HEXAGON SOCKET HEAD	2					
47	BHL–21668–00	LABEL, TIRE	1					
48	BAG–F815P–00	LABEL, NOTICE 1	1					

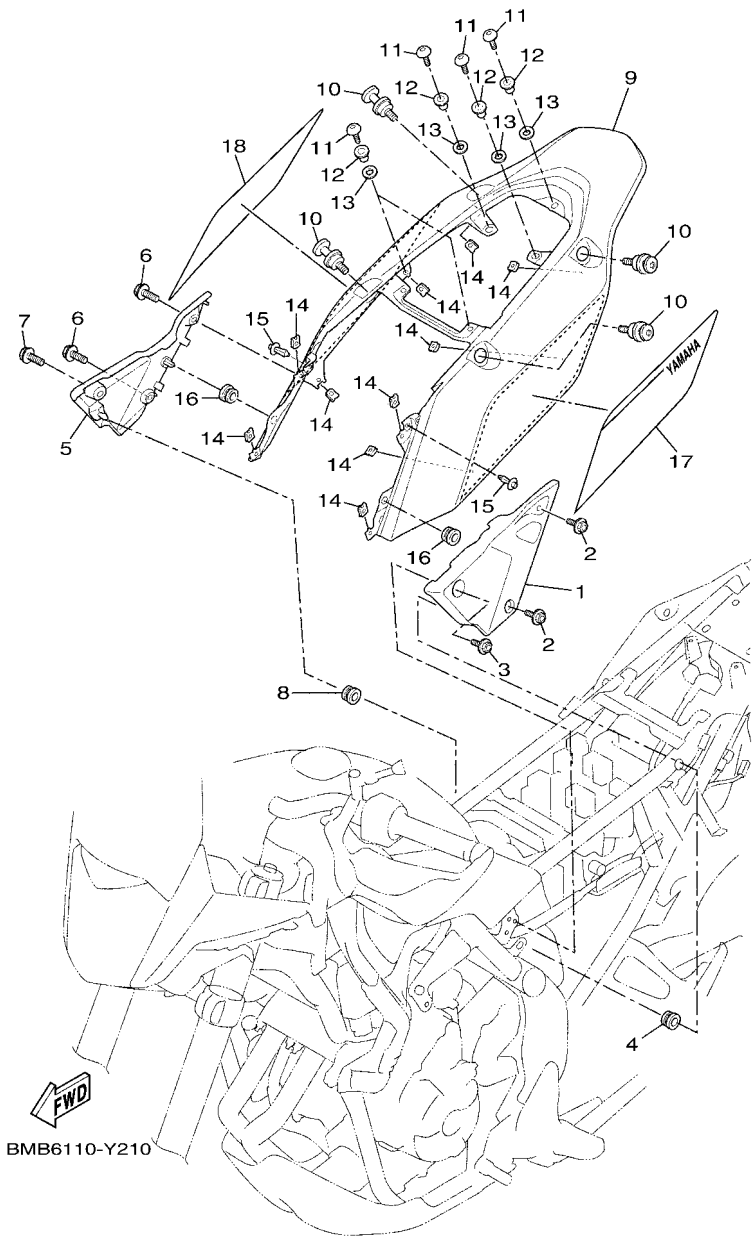

FIG. 21 SIDE COVER

REF. NO.	PART NO.	DESCRIPTION	BYC1					REMARKS
1	BMB–21711–00	COVER, SIDE 1	1					
2	90149–05042	SCREW	2					
3	90149–05045	SCREW	1					
4	90480–01558	GROMMET	1					
5	BMB–21721–00	COVER, SIDE 2	1					
6	90149–05042	SCREW	2					
7	90149–05045	SCREW	1					
8	90480–01558	GROMMET	1					
9	BMB–21731–00–P0	COVER, SIDE 3	1					DPBMC
10	BMB–2162A–00	HOOK	4					
11	90111–05002	BOLT, HEXAGON SOCKET BUTTON	5					
12	90387–06255	COLLAR	5					
13	90202–08006	WASHER, PLATE	5					
14	90183–05076	NUT, SPRING	10					
15	90269–06019	RIVET	2					
16	90480–13567	GROMMET	2					
17	BMB–2173E–00	GRAPHIC 1	1					
18	BMB–2173F–00	GRAPHIC 2	1					

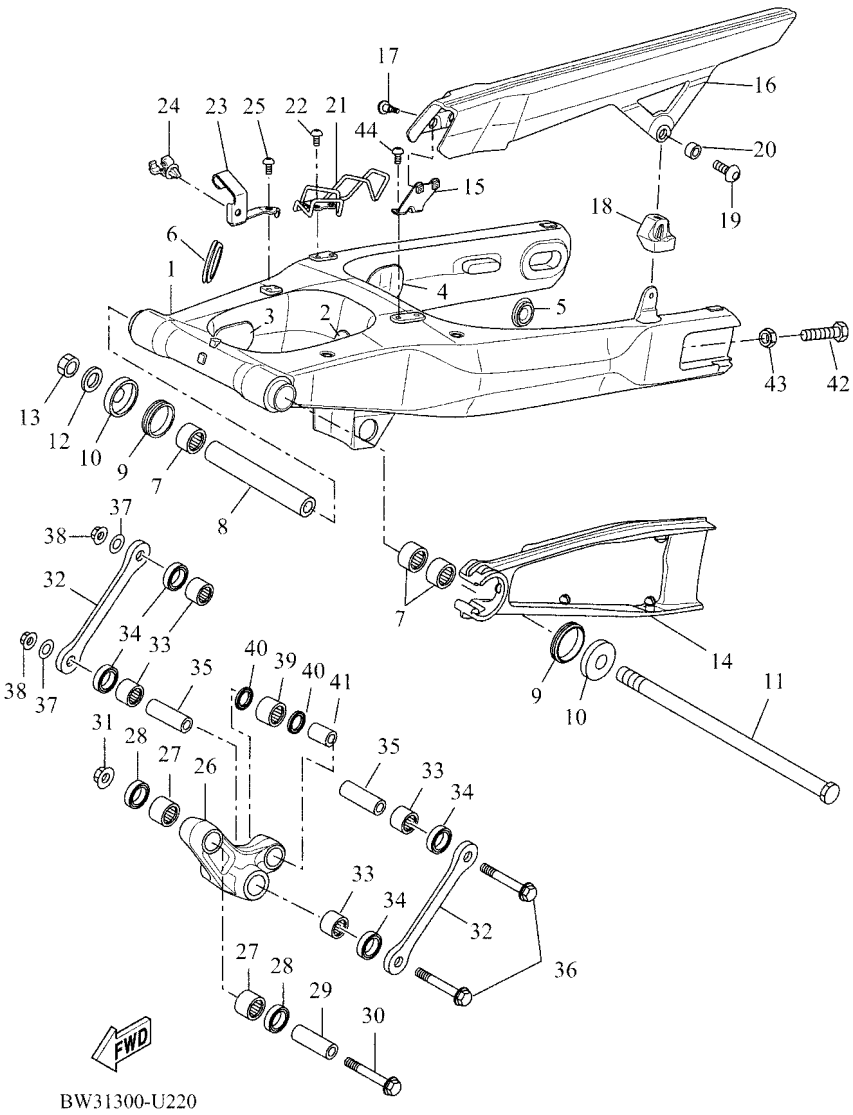

FIG. 22 REAR ARM

REF. NO.	PART NO.	DESCRIPTION	BYC1					REMARKS
1	BW3–22110–01	REAR ARM COMP.	1					
2	90338–20008	PLUG	1					
3	90338–40004	PLUG	2					
4	90338–30008	PLUG	2					
5	90338–30007	PLUG	1					
6	BW3–22417–00	PLUG	1					
7	93317–22262	BEARING	3					
8	90387–16034	COLLAR	1					
9	93108–35004	OIL SEAL (35-41-8)	2					
10	30X–2219X–00	COVER	2					
11	BW3–22141–00	SHAFT, PIVOT	1					
12	90201–16021	WASHER, PLATE	1					
13	90185–16002	NUT, SELF-LOCKING	1					
14	BW3–F2151–00	SEAL, GUARD	1					
15	BMB–22131–00	STAY, CHAIH CASE 1	1					
16	BMB–22311–00	CASE, CHAIN	1					
17	1C3–22969–10	SCREW, 1	2					
18	BNW–F2313–00	RUBBER, CHAIN CASE	1					
19	90111–05014	BOLT, HEXAGON SOCKET BUTTON	1					
20	90560–05001	SPACER	1					
21	BW3–25886–10	HOLDER, BRAKE HOSE	1					
22	90111–06864	BOLT, HEXAGON SOCKET BUTTON	2					
23	BMB–2216A–00	STAY 4	1					
24	90464–14013	CLAMP	1					
25	90111–06864	BOLT, HEXAGON SOCKET BUTTON	1					
26	BW3–2217A–01	ARM, RELAY	1					
27	93315–31758	BEARING	2					

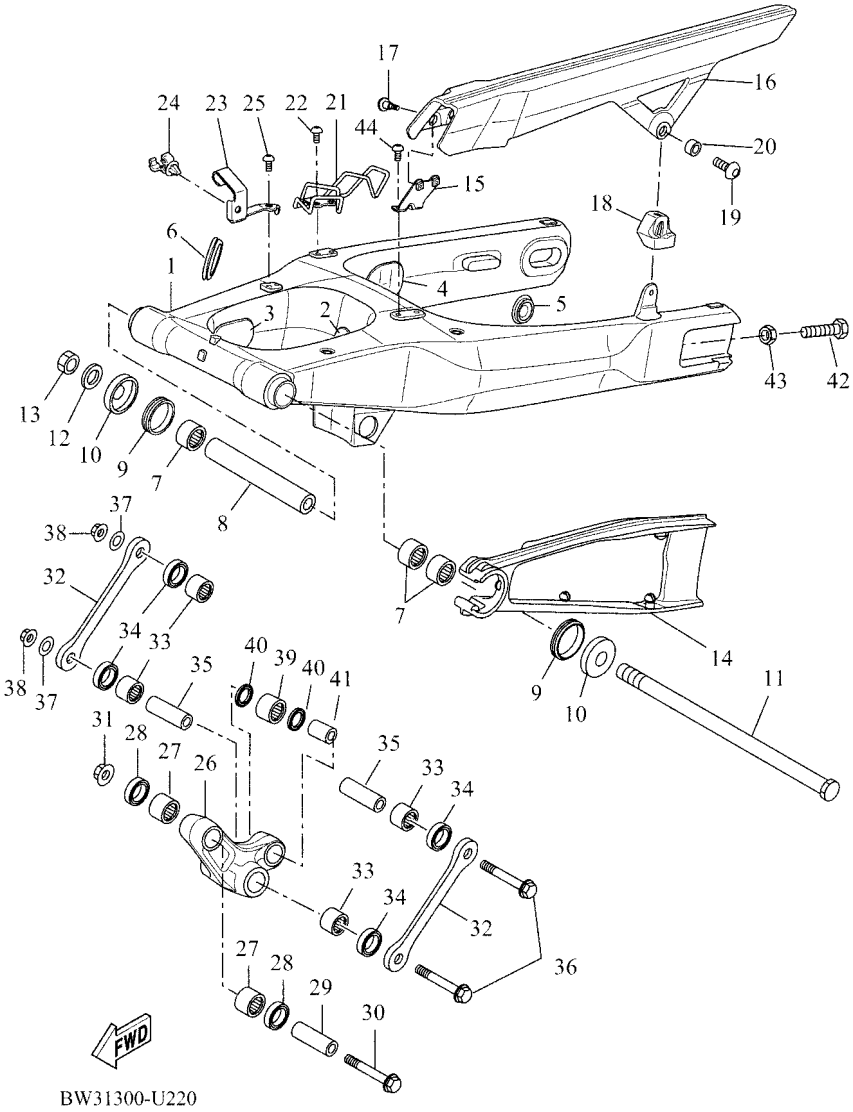

FIG. 22 REAR ARM

REF. NO.	PART NO.	DESCRIPTION	BYC1					REMARKS
28	93109–17071	OIL SEAL	2					
29	90387–124V0	COLLAR	1					
30	90101–12058	BOLT	1					
31	95607–12200	NUT, SELF-LOCKING	1					
32	BW3–2217M–00	ARM 1	2					
33	93317–21746	BEARING	4					
34	93109–17071	OIL SEAL	4					
35	90387–126Y1	COLLAR	2					
36	90101–12059	BOLT	2					
37	90201–124G9	WASHER, PLATE	2					
38	90185–12119	NUT, SELF-LOCKING	2					
39	93317–31771	BEARING	1					
40	93109–17071	OIL SEAL	2					
41	90387–127W0	COLLAR	1					
42	90101–08006	BOLT	2					
43	95302–08600	NUT, HEXAGON	2					
44	90111–06864	BOLT, HEXAGON SOCKET BUTTON	2					

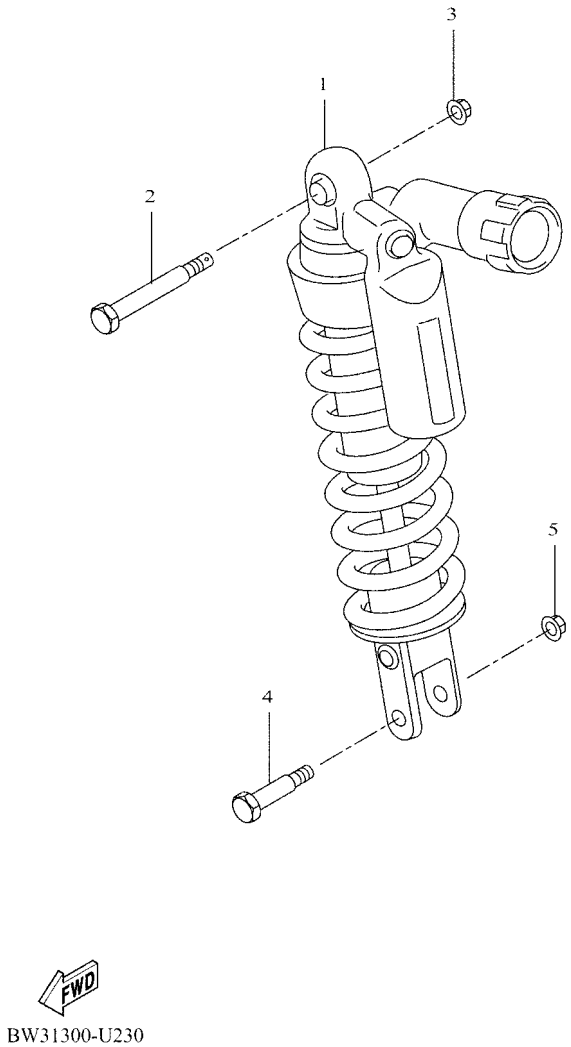

FIG. 23 REAR SUSPENSION

REF. NO.	PART NO.	DESCRIPTION	BYC1					REMARKS
1	BW3–22210–02	SHOCK ABSORBER ASSY, REAR	1					
2	90102–12080	BOLT, WITH HOLE	1					
3	95607–12200	NUT, SELF-LOCKING	1					
4	90101–10659	BOLT	1					
5	95607–10200	NUT, U FLANGE	1					

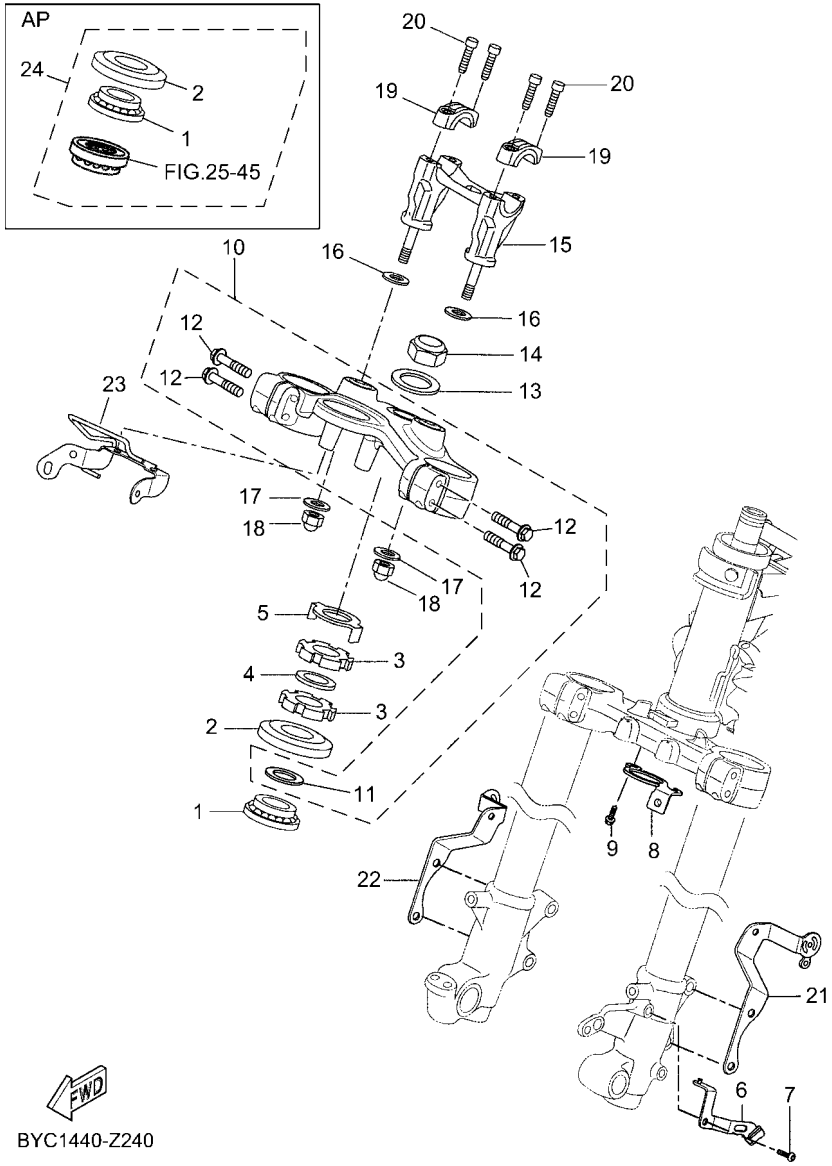

FIG. 24 STEERING

REF. NO.	PART NO.	DESCRIPTION	BYC1					REMARKS
1	93332–00079	BEARING	1					
2	1W1–23416–00	COVER, BALL RACE 2	1					
3	90179–25615	NUT	2					
4	90202–26142	WASHER, PLATE	1					
5	3YF–23418–00	WASHER, SPECIAL	1					
6	BW3–23318–00	WIRE, HOLDER 1	1					
7	92017–06012	BOLT, BUTTON HEAD	1					
8	BAU–2334G–00	BRACKET 1	1					
9	95027–06012	BOLT, FLANGE	2					
10	BW3–W2343–00	CROWN, HANDLE SET	1					
11	90201–256K6	.WASHER, PLATE (0.9T)	1					
12	90105–08134	.BOLT, FLANGE	4					
13	90201–220T0	WASHER, PLATE	1					
14	1RC–23393–00	NUT, SPECIAL	1					
15	BW3–F3442–10	HOLDER, HANDLE LOWER	1					
16	92902–10200	WASHER	2					
17	90201–10043	WASHER, PLATE	2					
18	90176–10003	NUT, CAP	2					
19	BW3–F3441–00	HOLDER, HANDLE UPPER	2					
20	91317–08030	BOLT, HEXAGON SOCKET HEAD	4					
21	BW3–2317E–10	STAY 1	1					
22	BW3–2317F–10	STAY 2	1					
23	BW3–2334H–10	BRACKET 2	1					
24	BVW–W000B–00	STEERING BEARING KIT	1					

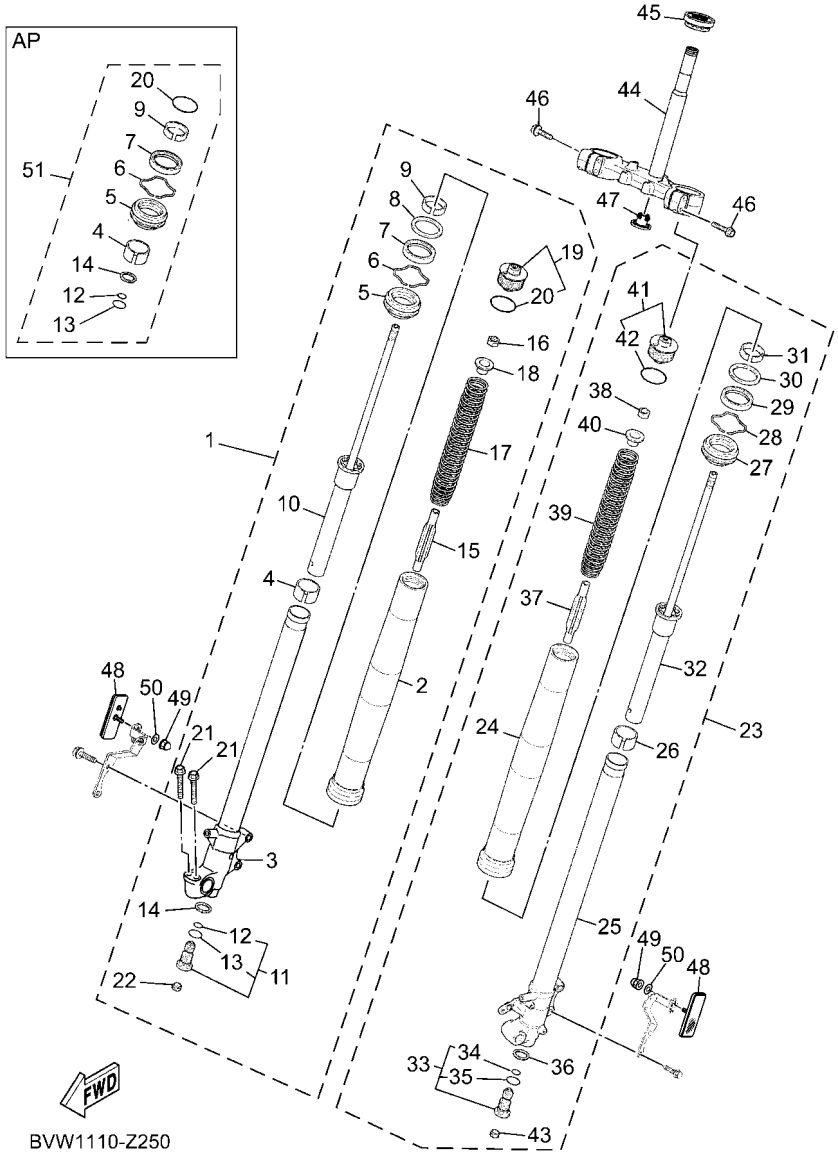

FIG. 25 FRONT FORK

REF. NO.	PART NO.	DESCRIPTION	BYC1					REMARKS
1	BW3–23103–02	DAMPER ASSY. (R)	1					
2	BW3–23126–00	.TUBE, OUTER	1					
3	BW3–23120–01	.INNER TUBE COMP.2	1					
4	5EB–23171–00	.PISTON, FRONT FORK	1					
5	4PU–23144–00	.SEAL, DUST	1					
6	4V4–23153–L0	.RING, SNAP	1					(KYB)
7	4PU–23145–01	.OIL SEAL	1					
8	4V4–23146–L0	.WASHER, OIL SEAL	1					(KYB)
9	2CR–23125–00	.METAL, SLIDE 1	1					
10	BW3–23170–01	.CYLINDER COMP., FRONT FORK	1					
11	BW3–2330H–01	.VALVE ASSY	1					
12	4DA–23147–L1	..O-RING	1					
13	276–23114–01	..GASKET	1					
14	2HH–23158–L0	.GASKET	1					
15	23P–23117–01	.GUIDE, SPRING	1					
16	3XJ–23357–L0	.NUT	1					
17	BW3–23141–00	.SPRING, FRONT FORK	1					
18	BW3–23117–00	.GUIDE, SPRING	1					
19	BW3–23111–01	.BOLT, CAP	1					
20	3XJ–23147–L1	..O-RING	1					
21	90105–08134	.BOLT, FLANGE	2					
22	3JD–2312G–L1	.PLUG, HOLE	1					
23	BW3–23102–02	DAMPER ASSY. (L)	1					
24	BW3–23126–00	.TUBE, OUTER	1					
25	BW3–23110–01	.INNER TUBE COMP.1	1					
26	5EB–23171–00	.PISTON, FRONT FORK	1					
27	4PU–23144–00	.SEAL, DUST	1					

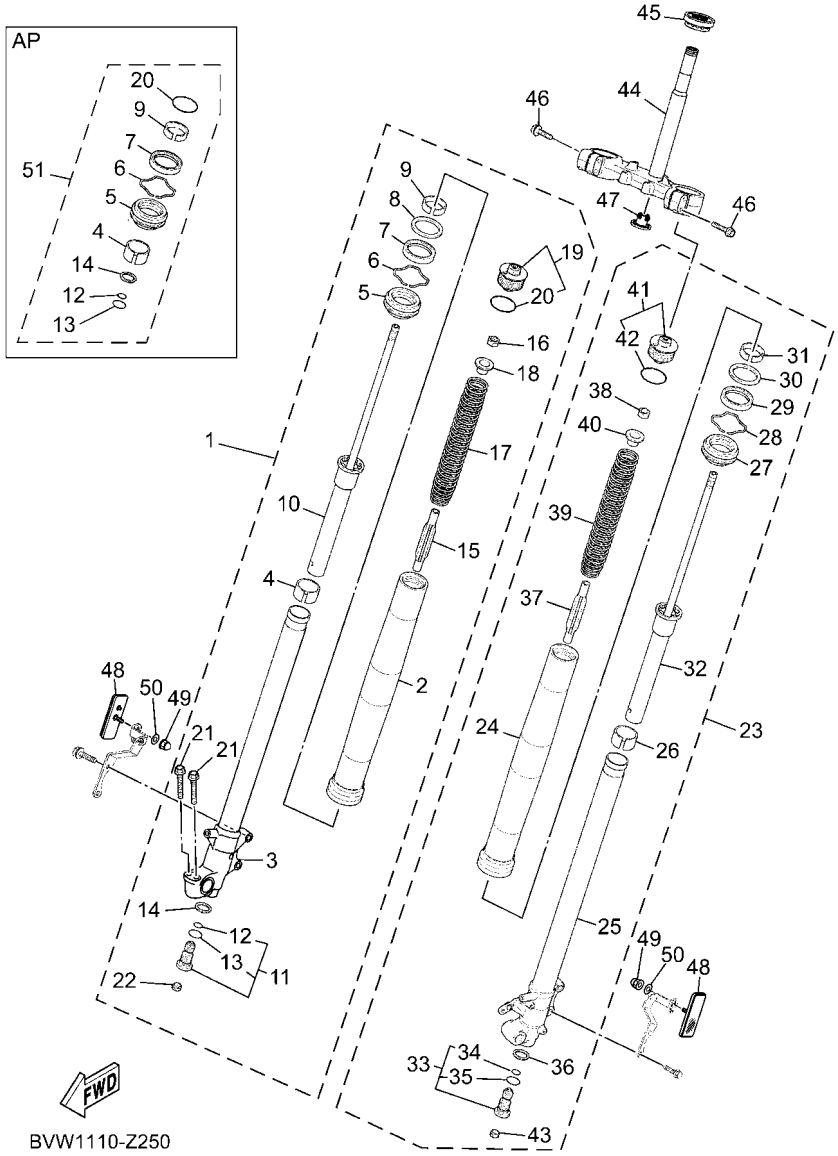

FIG. 25 FRONT FORK

REF. NO.	PART NO.	DESCRIPTION	BYC1					REMARKS
28	4V4–23153–L0	.RING, SNAP	1					(KYB)
29	4PU–23145–01	.OIL SEAL	1					
30	4V4–23146–L0	.WASHER, OIL SEAL	1					(KYB)
31	2CR–23125–00	.METAL, SLIDE 1	1					
32	BW3–23170–01	.CYLINDER COMP., FRONT FORK	1					
33	BW3–2330H–01	.VALVE ASSY	1					
34	4DA–23147–L1	..O-RING	1					
35	276–23114–01	..GASKET	1					
36	2HH–23158–L0	.GASKET	1					
37	23P–23117–01	.GUIDE, SPRING	1					
38	3XJ–23357–L0	.NUT	1					
39	BW3–23141–00	.SPRING, FRONT FORK	1					
40	BW3–23117–00	.GUIDE, SPRING	1					
41	BW3–23111–01	.BOLT, CAP	1					
42	3XJ–23147–L1	..O-RING	1					
43	3JD–2312G–L0	.PLUG, HOLE	1					
44	BW3–23340–00	UNDER BRACKET COMP.	1					
45	93332–00008	BEARING	1					
46	90105–08134	BOLT, FLANGE	4					
47	4KM–23123–01	COVER, UNDER 1	1					
48	8GM–85110–00	REFLECTOR ASSY	2					
49	90176–05004	NUT, CAP	2					
50	90201–05027	WASHER, PLATE	2					
51	BAU–W003B–00	FORK SEALS KIT	1					AP

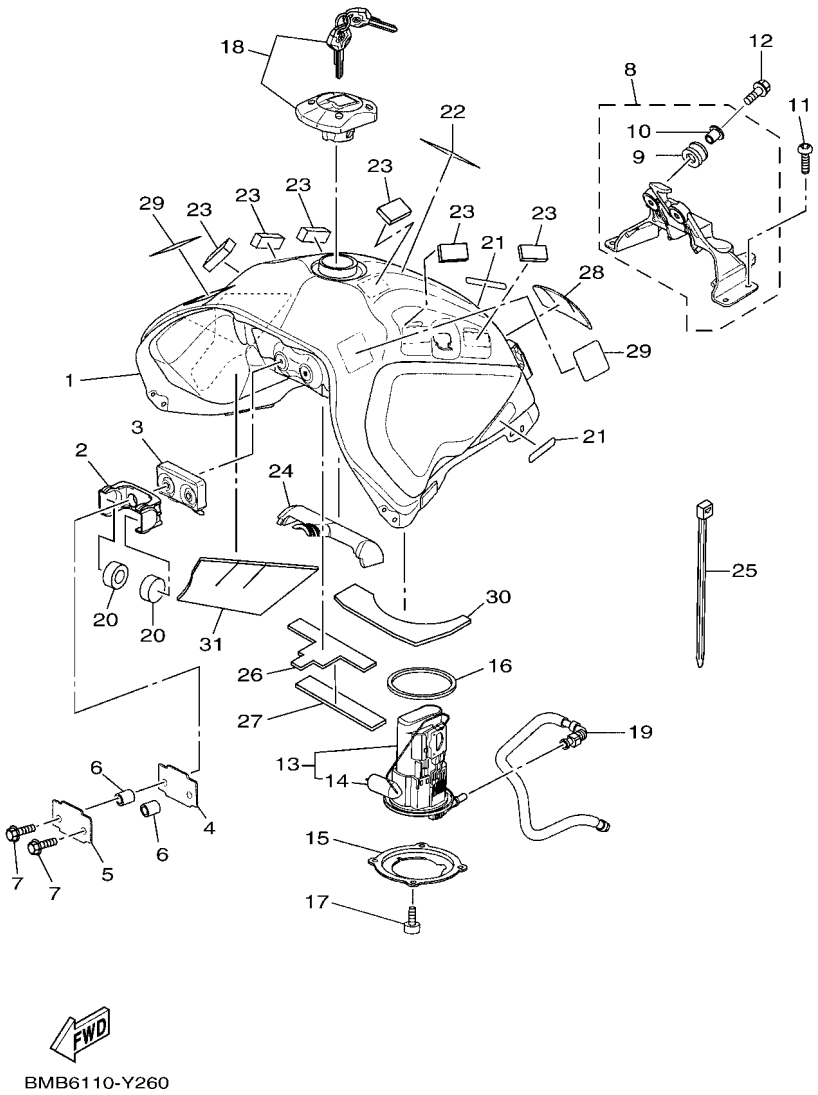

FIG. 26 FUEL TANK

REF. NO.	PART NO.	DESCRIPTION	BYC1					REMARKS
1	BW3–24110–02–P1	FUEL TANK COMP.	1					MDNM6 FOR DPBMC
2	BW3–2412Y–00	BRACKET, TANK FITTING	1					
3	BW3–24181–00	DAMPER, LOCATING 1	1					
4	BW3–24182–00	DAMPER, LOCATING 2	1					
5	BW3–24186–00	WASHER, SPECIAL	1					
6	90387–06553	COLLAR	2					
7	95812–06025	BOLT, FLANGE	2					
8	BW3–24105–01	TANK BRACKET ASSY 2	1					
9	90480–18018	.GROMMET	2					
10	90387–06136	.COLLAR	2					
11	90111–06051	BOLT, HEXAGON SOCKET BUTTON	4					
12	95812–06025	BOLT, FLANGE	2					
13	BW3–13907–10	FUEL PUMP COMP.	1					
14	BW3–85752–10	.SENDER	1					
15	BW3–24491–00	BRACKET, FUEL PUMP	1					
16	1RC–24486–00	O-RING	1					
17	91312–05010	BOLT, HEXAGON SOCKET HEAD	4					
18	BW3–24602–00	CAP ASSY	1					
19	BW3–13971–01	PIPE, FUEL 1	1					
20	3TB–24181–00	DAMPER, LOCATING 1	2					
21	BW3–2411G–00	HOOK, SIDE COVER 1	2					
22	5UM–21717–E0	DAMPER	1					
23	90520–05025	DAMPER, PLATE	6					
24	BW3–24184–00	DAMPER, LOCATING 4	1					
25	90464–65001	CLAMP	1					
26	BW3–24595–00	PROTECTOR	1					
27	BW3–24595–10	PROTECTOR	1					

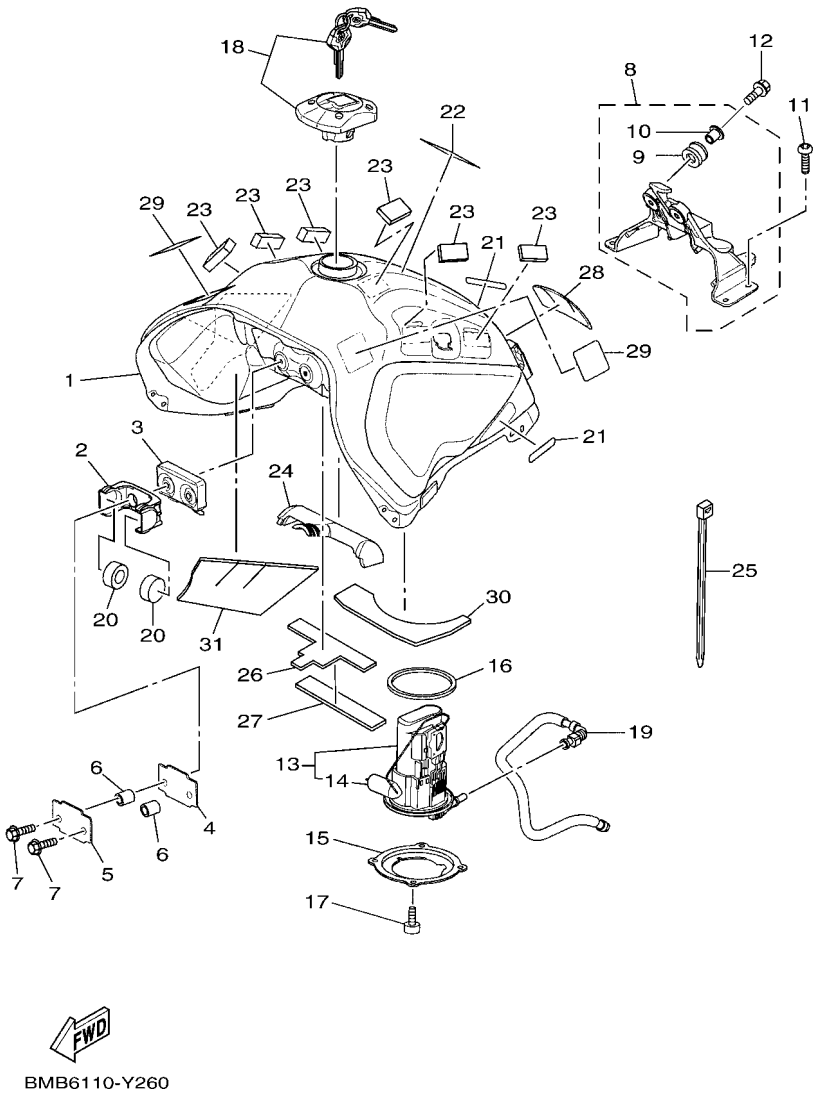

FIG. 26 FUEL TANK

REF. NO.	PART NO.	DESCRIPTION	BYC1					REMARKS
28	BW3–24141–00	PROTECTOR, FUEL TANK	1					
29	3FY–21575–01	SEAL 1	2					
30	BEH–24141–00	PROTECTOR, FUEL TANK	1					
31	BEH–24141–10	PROTECTOR, FUEL TANK	1					

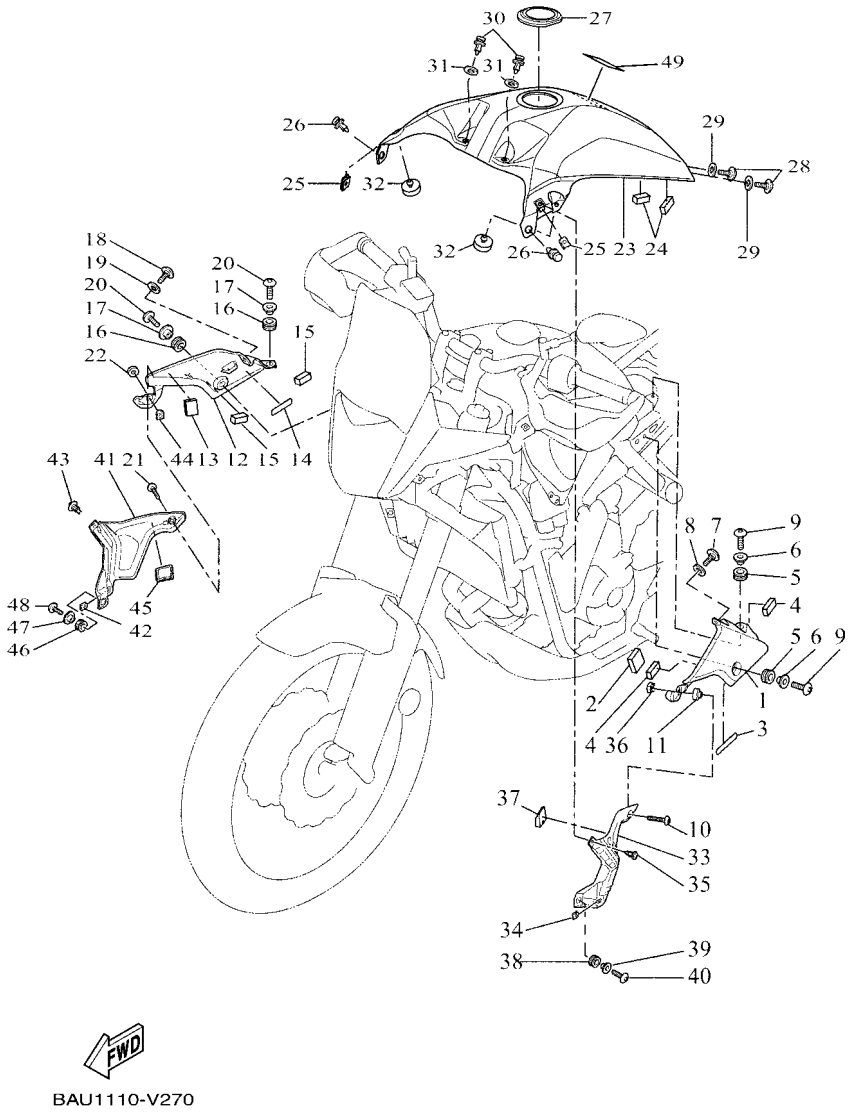

FIG. 27 FUEL TANK 2

REF. NO.	PART NO.	DESCRIPTION	BYC1					REMARKS
1	BMB–24129–00–P0	COVER, SIDE 1	1					MDNM6 FOR DPBMC
2	5SL–21649–00	DAMPER	2					
3	BW3–2411G–00	HOOK, SIDE COVER 1	1					
4	90520–05018	DAMPER, PLATE	2					
5	90480–13035	GROMMET	2					
6	90387–06089	COLLAR	2					
7	90111–05011	BOLT, HEXAGON SOCKET BUTTON	1					
8	90202–08006	WASHER, PLATE	1					
9	90111–06151	BOLT, HEXAGON SOCKET BUTTON	2					
10	90111–05014	BOLT, HEXAGON SOCKET BUTTON	1					
11	90387–05068	COLLAR	1					
12	BMB–24139–00–P0	COVER, SIDE 2	1					MDNM6 FOR DPBMC
13	5SL–21649–00	DAMPER	2					
14	BW3–2411G–00	HOOK, SIDE COVER 1	1					
15	90520–05018	DAMPER, PLATE	2					
16	90480–13035	GROMMET	2					
17	90387–06089	COLLAR	2					
18	90111–05011	BOLT, HEXAGON SOCKET BUTTON	1					
19	90202–08006	WASHER, PLATE	1					
20	90111–06151	BOLT, HEXAGON SOCKET BUTTON	2					
21	90111–05014	BOLT, HEXAGON SOCKET BUTTON	1					
22	90387–05068	COLLAR	1					
23	BMB–241B1–00–P0	COVER, TANK	1					UR FOR DPBMC
24	90520–04812	DAMPER, PLATE	2					
25	90183–05076	NUT, SPRING	2					
26	90269–07077	RIVET	2					
27	BW3–F414G–00	SEAL	1					

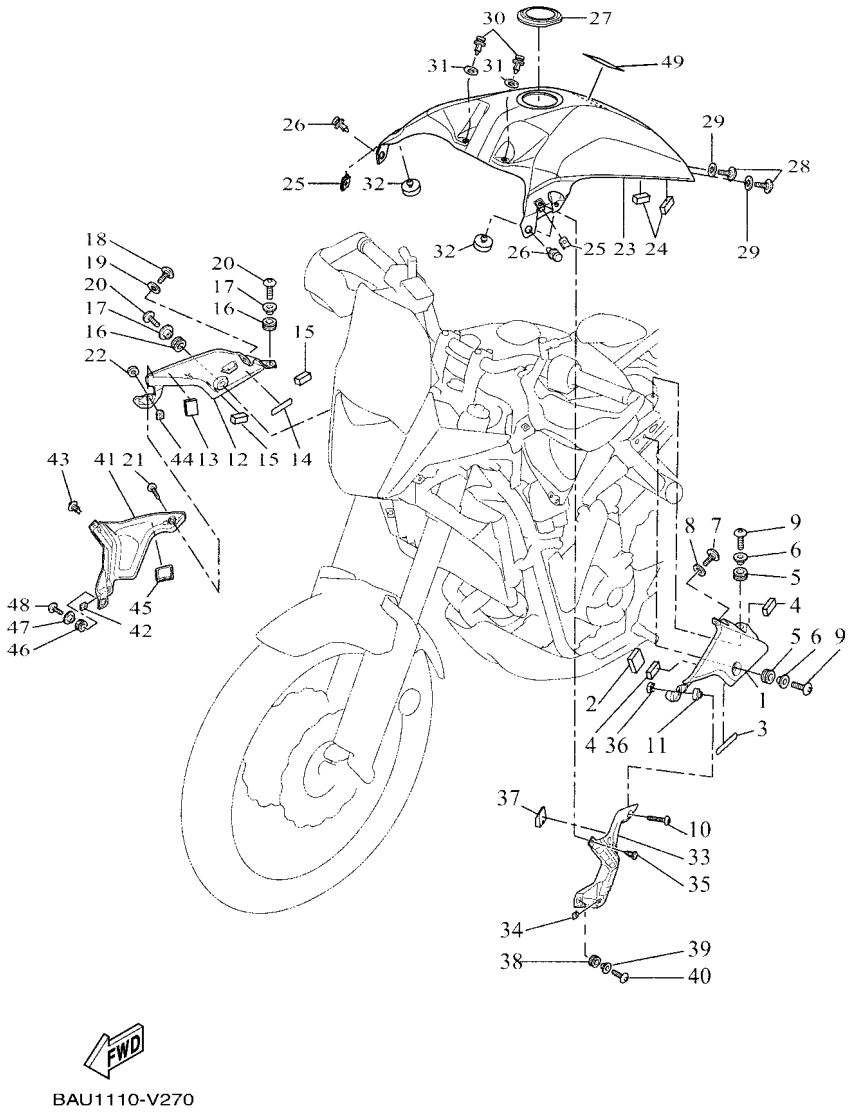

FIG. 27 FUEL TANK 2

REF. NO.	PART NO.	DESCRIPTION	BYC1					REMARKS
28	90111–05011	BOLT, HEXAGON SOCKET BUTTON	2					
29	90202–08006	WASHER, PLATE	2					
30	90269–07077	RIVET	2					
31	5SL–84753–00	DAMPER	2					
32	90338–06010	PLUG	2					
33	BMB–28229–00	COVER 2	1					
34	90183–05076	NUT, SPRING	1					
35	90269–06008	RIVET	1					
36	90183–05X08	NUT, SPRING	1					
37	BW3–F414J–00	DAMPER, PLATE 2	1					
38	90480–17213	GROMMET	1					
39	90387–06146	COLLAR	1					
40	90111–05039	BOLT, HEXAGON SOCKET BUTTON	1					
41	BMB–28239–00	COVER 3	1					
42	90183–05076	NUT, SPRING	1					
43	90269–06008	RIVET	1					
44	90183–05X08	NUT, SPRING	1					
45	BW3–F414K–00	DAMPER, PLATE 3	1					
46	90480–17213	GROMMET	1					
47	90387–06146	COLLAR	1					
48	90111–05039	BOLT, HEXAGON SOCKET BUTTON	1					
49	1XC–21568–01	LABEL, WARNING	1					

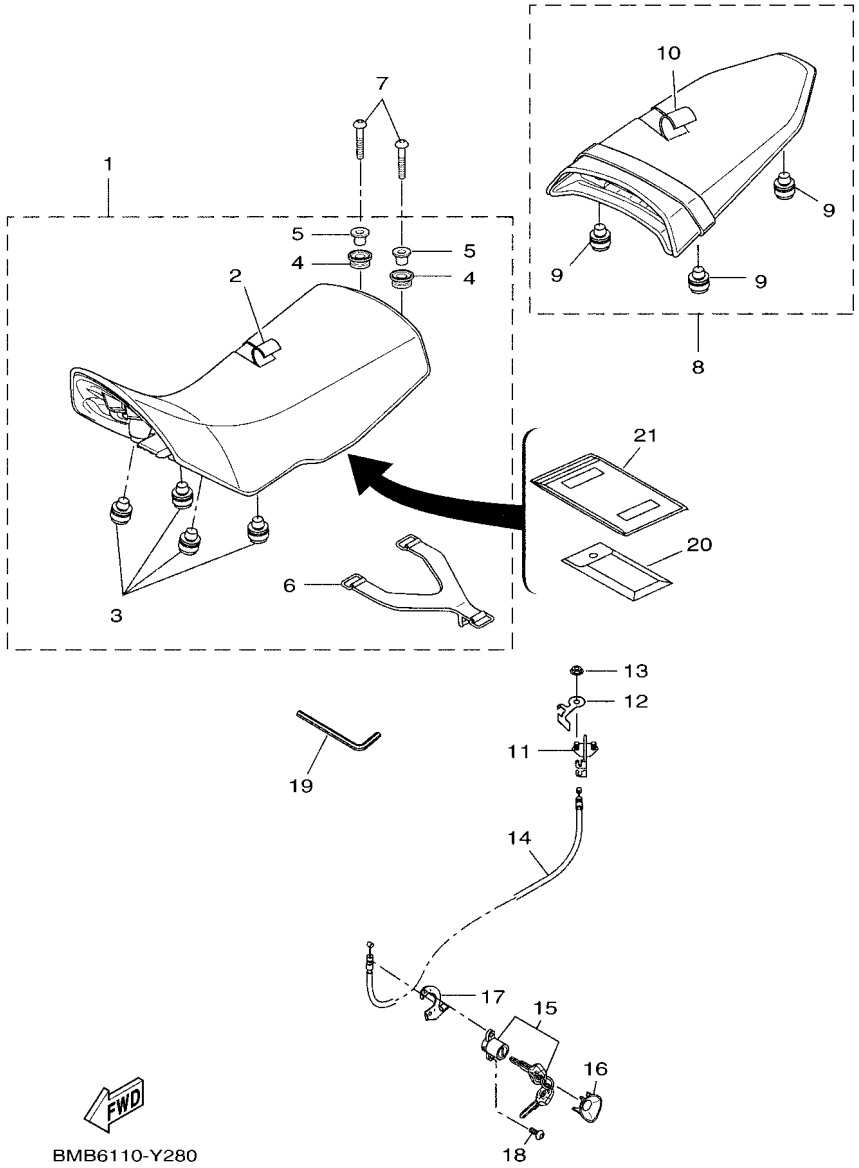

FIG. 28 SEAT

REF. NO.	PART NO.	DESCRIPTION	BYC1					REMARKS
1	BW3–F4710–00	SINGLE SEAT ASSY	1					
2	BW3–F470F–00	.SEAT COVER COMP.	1					
3	1SD–F4723–00	.DAMPER, SEAT	4					
4	90480–14X03	.GROMMET	2					
5	90387–07X09	.COLLAR	2					
6	11D–F483H–00	.BAND	1					
7	92012–06025	BOLT, BUTTON HEAD	2					
8	BW3–F4750–00	TANDEM SEAT ASSY	1					
9	1SD–F4723–00	.DAMPER, SEAT	4					
10	BW3–F470H–00	.SEAT COVER COMP. ,2	1					
11	1WD–F4780–00	SEAT LOCK ASSY	1					
12	BAU–2479K–00	PLATE, LOCK	1					
13	4XV–8182A–00	NUT	2					
14	BVW–2478E–00	CABLE, SEAT LOCK	1					
15	2TV–W2470–00	ROTOR SET	1					
16	BW3–F4796–00	COVER	1					
17	23P–2117K–01	STAY, LOCK	1					
18	90149–06018	SCREW	2					
19	23P–28164–00	WRENCH, HEXAGON 8	1					
20	BAG–F8100–00	TOOL KIT	1					
21	4KG–28186–11	POUCH	1					

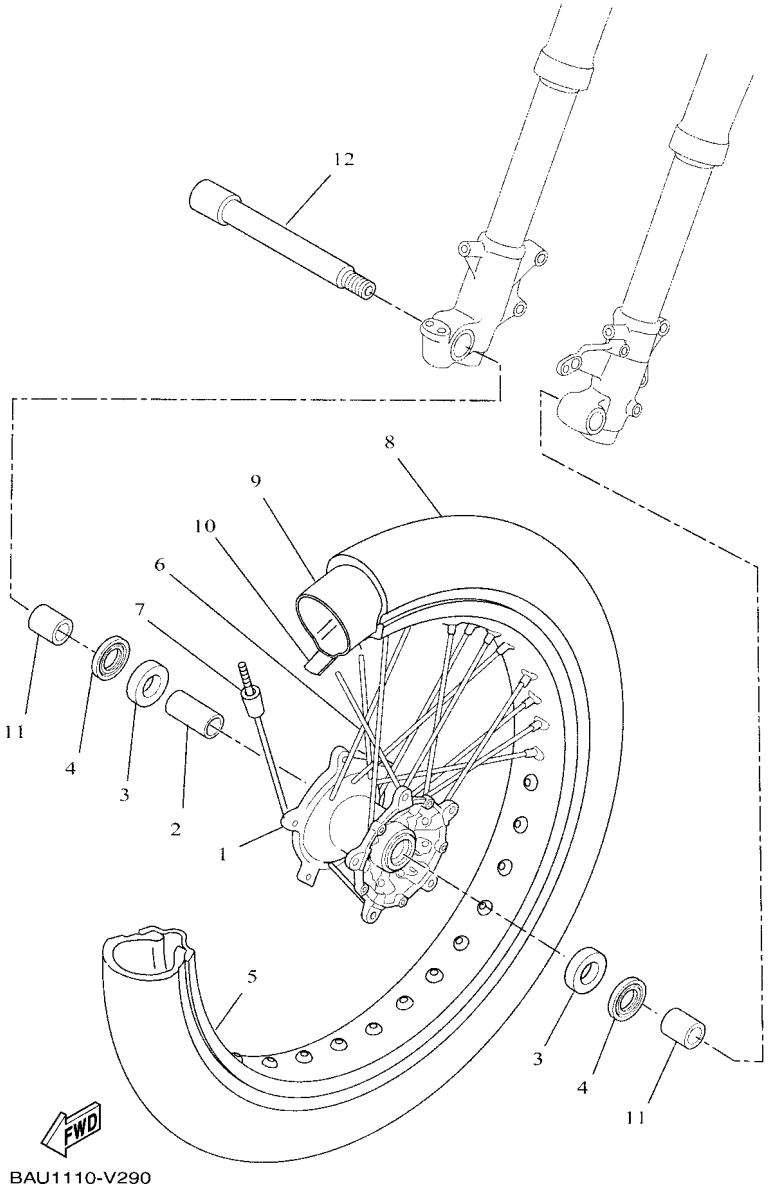

FIG. 29 FRONT WHEEL

REF. NO.	PART NO.	DESCRIPTION	BYC1					REMARKS
1	BW3–25111–00	HUB, FRONT	1					
2	BW3–25117–00	SPACER, BEARING	1					
3	93306–00420	BEARING	2					
4	93106–30045	OIL SEAL	2					
5	94418–21005	RIM (1.85-21)	1					
6	BW3–F5104–00	SPOKE SET, FRONT	1					
7	BW3–25398–00	BALANCER, WHEEL	1					UN
8	*	TIRE (90/90-21 M/C 54V M+S)	1					LM PIRELLI
9	*	TUBE (MA-21 M/C)	1					LM PIRELLI
10	94309–21800	BAND, RIM (21)	1					HERRMANS
11	BAU–25183–00	COLLAR, WHEEL	2					
12	BW3–25181–00	AXLE, WHEEL	1					

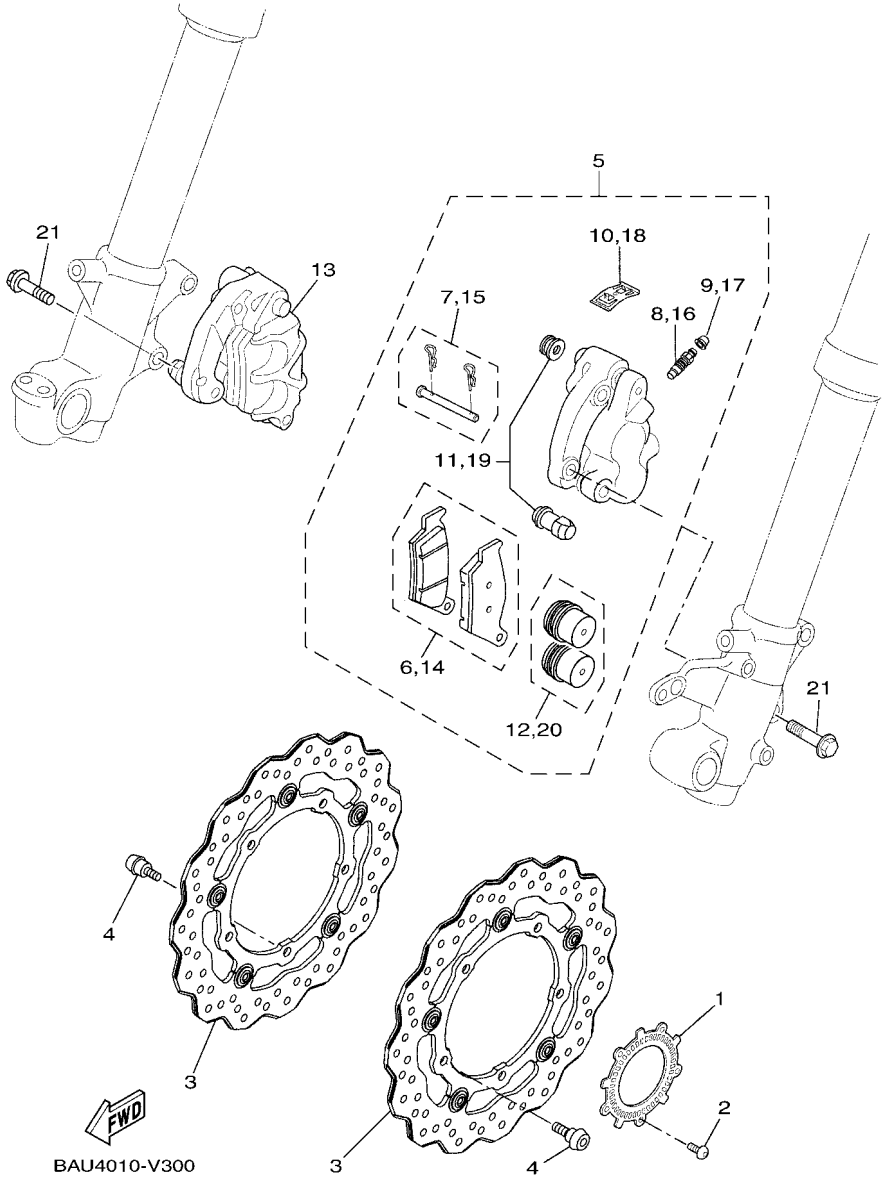

FIG. 30 FRONT BRAKE CALIPER

REF. NO.	PART NO.	DESCRIPTION	BYC1					REMARKS
1	BW3–F517G–00	ROTOR, SENSOR	1					
2	90149–05030	SCREW	5					
3	1WS–2581T–01	DISK BRAKE ASSY	2					
4	90109–06328	BOLT	10					
5	BNW–F580T–00	CALIPER ASSY (LEFT)	1					
6	BW3–F5805–00	.BRAKE PAD KIT	1					
7	5D7–F5924–10	.PIN, PAD	1					(BREMBO)
8	56P–F5824–00	.SCREW, BLEED	1					
9	4CU–F5825–00	.CAP	1					(BREMBO)
10	5DS–F5919–00	.SUPPORT, PAD	1					(BREMBO)
11	5DS–F5917–00	.BOOT, CALIPER	1					(BREMBO)
12	BW3–F5802–00	.PISTON ASSY, CALIPER	1					
13	BNW–F580U–00	CALIPER ASSY (RIGHT)	1					
14	BW3–F5805–00	.BRAKE PAD KIT	1					
15	5D7–F5924–10	.PIN, PAD	1					(BREMBO)
16	56P–F5824–00	.SCREW, BLEED	1					
17	4CU–F5825–00	.CAP	1					(BREMBO)
18	5DS–F5919–00	.SUPPORT, PAD	1					(BREMBO)
19	5DS–F5917–00	.BOOT, CALIPER	1					(BREMBO)
20	BW3–F5802–00	.PISTON ASSY, CALIPER	1					
21	90105–10778	BOLT, FLANGE	4					

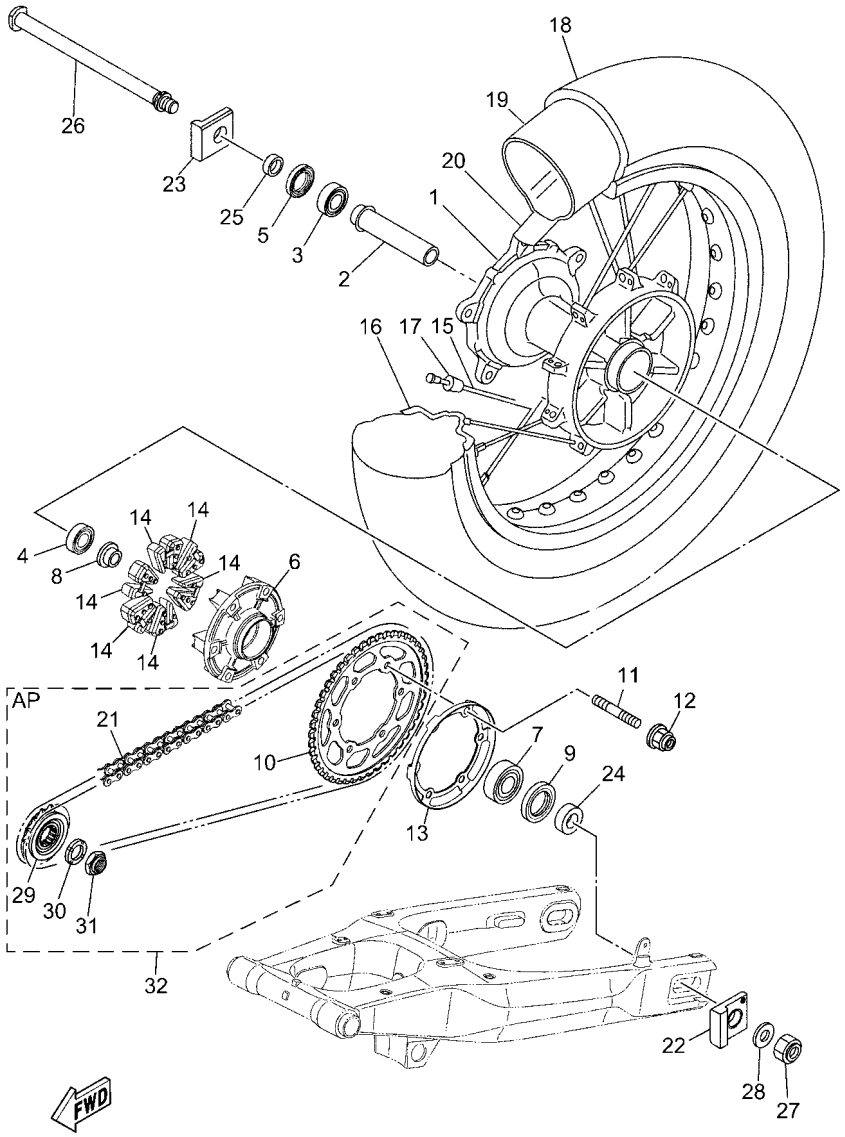

BVW1110-Z310

FIG. 31 REAR WHEEL

REF. NO.	PART NO.	DESCRIPTION	BYC1					REMARKS
1	BW3–25311–00	HUB, REAR	1					
2	BW3–25317–00	SPACER, BEARING	1					
3	93306–20480	BEARING	1					
4	93306–00416	BEARING	1					
5	93102–28022	OIL SEAL	1					
6	5JJ–25366–00	CLUTCH, HUB	1					
7	93306–205B5	BEARING	1					
8	1RC–25383–00	COLLAR, WHEEL	1					
9	93106–40013	OIL SEAL	1					
10	BW3–F5446–00	SPROCKET, DRIVEN (46T)	1					
11	90116–10048	BOLT, STUD	6					
12	90185–10011	NUT, SELF-LOCKING	6					
13	1RC–2537W–01	BRACKET 1	1					
14	5SL–25364–00	DAMPER	6					
15	BW3–F5304–00	SPOKE SET, REAR	1					
16	94440–18003	RIM (4.00-18)	1					
17	BW3–25398–00	BALANCER, WHEEL	1					UN
18	*	TIRE (150/70 R18 M/C 70V M+S)	1					LM PIRELLI
19	*	TUBE (MD-18 M/C)	1					LM PIRELLI
20	94315–18X00	BAND, RIM (18-19)	1					HERRMANS
21	94582–56122	CHAIN (DID525VZ2 122LE)	1					
22	3SP–25388–00	PULLER, CHAIN 1	1					
23	1RC–25389–00	PULLER, CHAIN 2	1					
24	90387–20036	COLLAR	1					
25	90387–20035	COLLAR	1					
26	4FN–22141–00	SHAFT, PIVOT	1					
27	90185–18009	NUT, SELF-LOCKING	1					

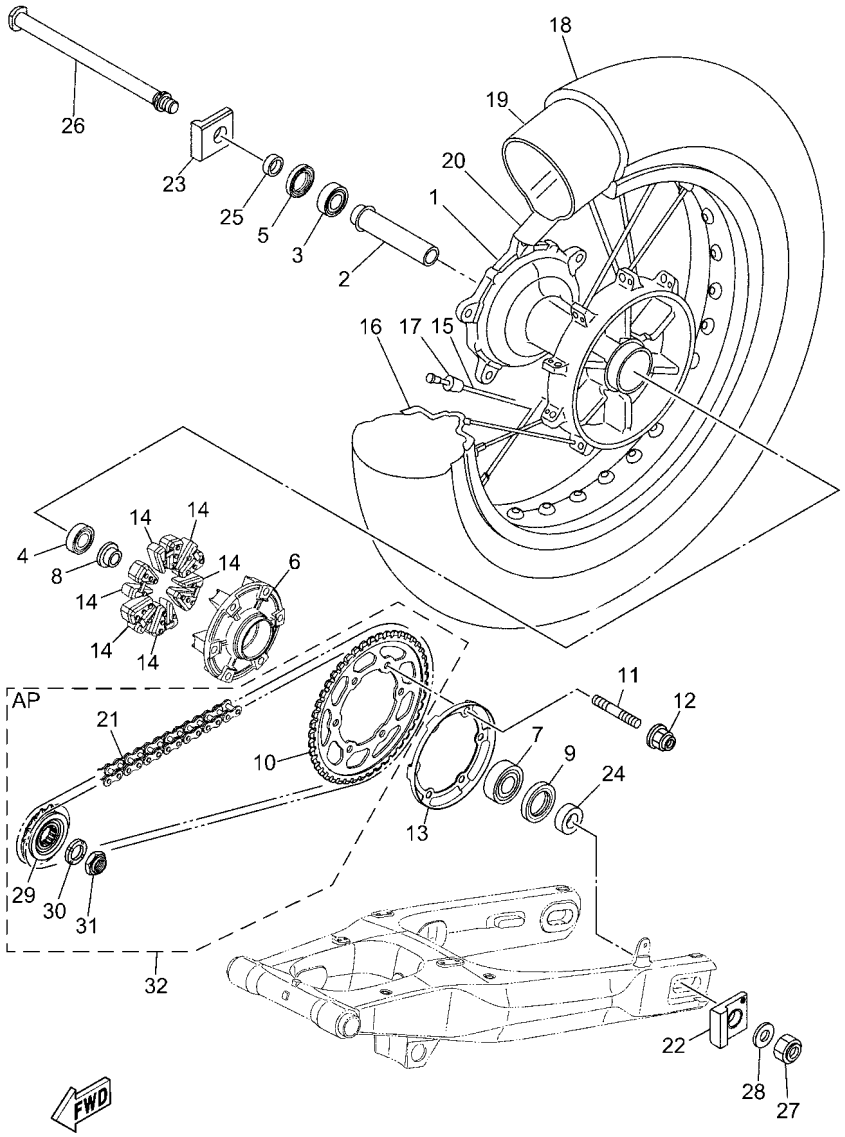

BVW1110-Z310

FIG. 31 REAR WHEEL

REF. NO.	PART NO.	DESCRIPTION	BYC1					REMARKS
28	90201–18013	WASHER, PLATE	1					
29	BW3–17460–00	SPROCKET, DRIVE (15T)	1					
30	90208–22002	WASHER, CONICAL SPRING	1					
31	90179–22018	NUT	1					
32	BHL–W001A–00	CHAIN & SPROCKET KIT	1					AP

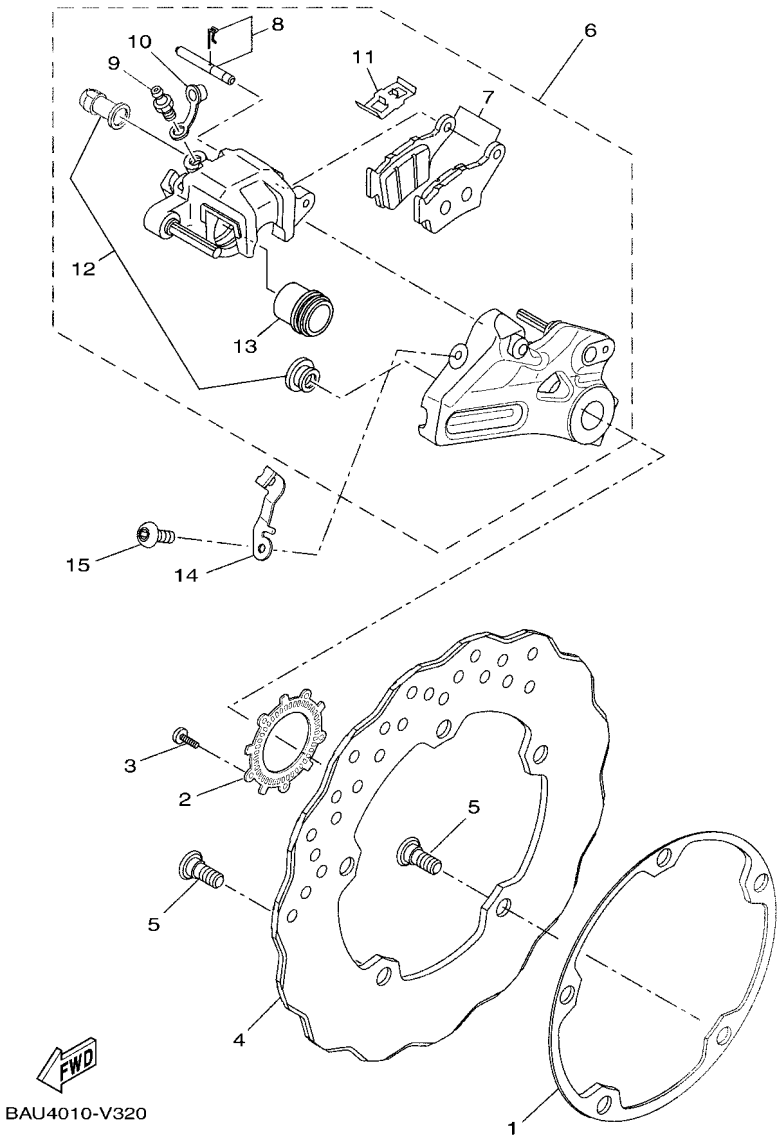

FIG. 32 REAR BRAKE CALIPER

REF. NO.	PART NO.	DESCRIPTION	BYC1					REMARKS
1	BW3–2518A–01	PLATE, FITTING	1					
2	BW3–F517G–00	ROTOR, SENSOR	1					
3	90149–05030	SCREW	5					
4	BW3–2582W–01	DISK, REAR BRAKE 2	1					
5	90109–08045	BOLT	5					
6	BW3–F580W–01	CALIPER ASSY, REAR 2	1					
7	BW3–F5806–00	.BRAKE PAD KIT 2	1					
8	5VK–F5924–10	.PIN, PAD	1					(BREMBO)
9	56P–F5824–00	.SCREW, BLEED	1					
10	4CU–F5825–00	.CAP	1					(BREMBO)
11	5VK–F5919–20	.SUPPORT, PAD	1					
12	5DS–F5917–00	.BOOT, CALIPER	1					(BREMBO)
13	BW3–F5802–10	.PISTON ASSY, CALIPER	1					
14	BAU–2538L–00	HOLDER, BRACKET	1					
15	90119–06109	BOLT, WITH WASHER	1					

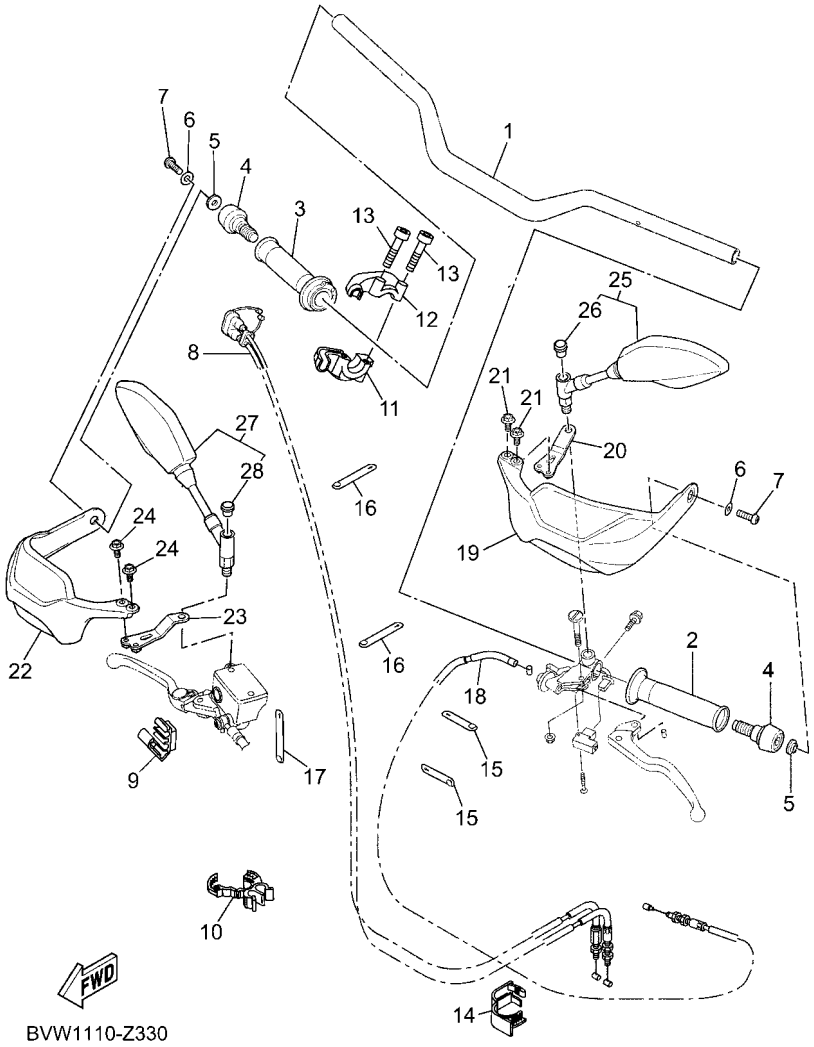

FIG. 33 STEERING HANDLE & CABLE

REF. NO.	PART NO.	DESCRIPTION	BYC1					REMARKS
1	BNW–F6111–01	HANDLEBAR	1					
2	BEH–F6241–00	GRIP	1					
3	BEH–F6240–00	GRIP ASSY	1					
4	BNW–26246–00	END, GRIP	2					
5	90387–08089	COLLAR	2					
6	90201–086P8	WASHER, PLATE	2					
7	92012–08025	BOLT, BUTTON HEAD	2					
8	BW3–F6301–00	THROTTLE CABLE ASSY	1					
9	39P–2627E–00	CLAMP, WIRE	1					
10	90464–16023	CLAMP	1					
11	BVW–26281–00	CAP, GRIP UPPER	1					
12	BVW–26282–00	CAP, GRIP UNDER	1					
13	92017–05035	BOLT, BUTTON HEAD	2					
14	90464–18004	CLAMP	1					
15	90464–20816	CLAMP	2					
16	90464–26802	CLAMP	2					
17	90464–30810	CLAMP	1					
18	BW3–F6335–00	WIRE, CLUTCH	1					
19	BMB–26141–00	GUARD, BRUSH 1	1					
20	BMB–26223–00	BRACKET, HANDLE 1	1					
21	90149–05045	SCREW	2					
22	BMB–26142–00	GUARD, BRUSH 2	1					
23	BMB–2622A–00	BRACKET, HANDLE 3	1					
24	90149–05045	SCREW	2					
25	BHL–26280–00	REAR VIEW MIRROR ASSY (LEFT)	1					
26	5PS–26133–20	.CAP	1					
27	BHL–26290–00	REAR VIEW MIRROR ASSY (RIGHT)	1					

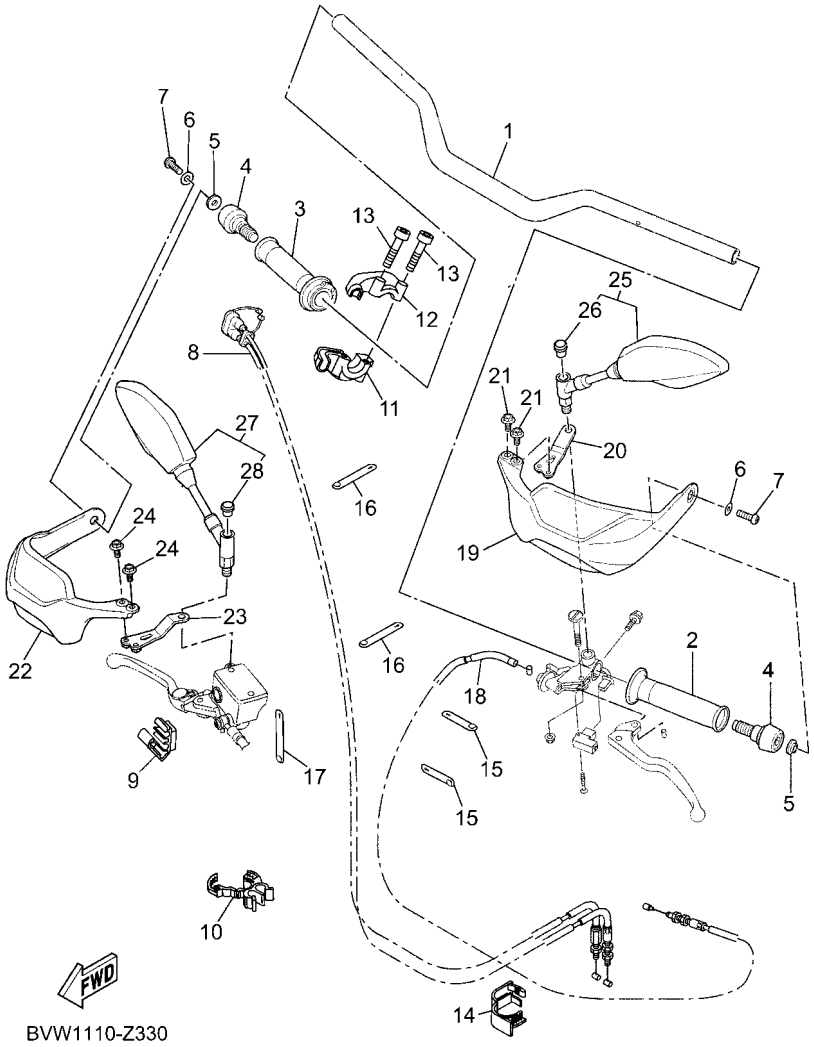

FIG. 33 STEERING HANDLE & CABLE

REF. NO.	PART NO.	DESCRIPTION	BYC1					REMARKS
28	5PS–26133–20	.CAP	1					

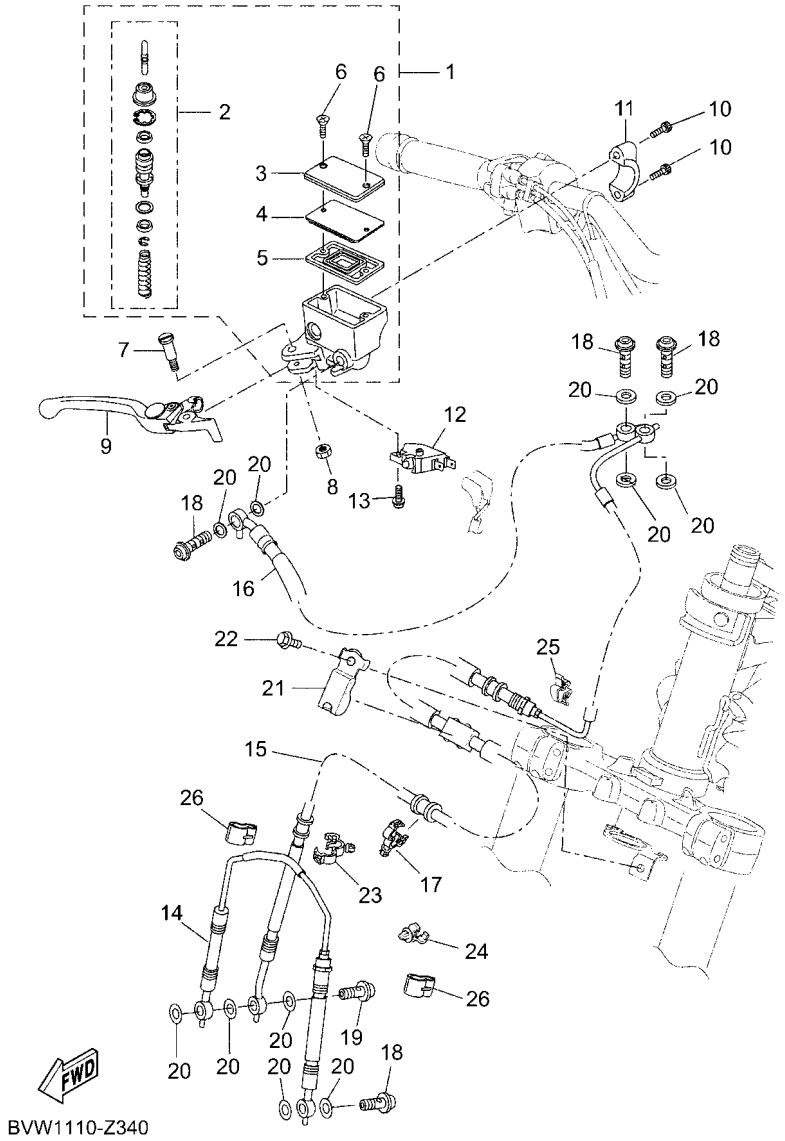

FIG. 34 FRONT MASTER CYLINDER

REF. NO.	PART NO.	DESCRIPTION	BYC1					REMARKS
1	2B0–2580A–00	MASTER CYLINDER SUB ASSY 2	1					
2	2D1–25807–00	.CYLINDER KIT, MASTER	1					
3	5VS–25852–00	.CAP, RESERVOIR	1					
4	5VS–25855–00	.BUSH,DIAPHRAGM	1					
5	20S–25854–00	.DIAPHRAGM, RESERVOIR	1					
6	5VS–2589H–00	.SCREW	2					
7	5VS–2589F–00	BOLT, LEVER	1					
8	95617–06100	NUT, SELF-LOCKING	1					
9	BNW–83922–00	LEVER 2	1					
10	5VS–26332–00	BOLT	2					
11	5VS–25867–00	BRACKET, MASTER CYLINDER	1					
12	1HP–83980–03	FRONT STOP SWITCH ASSY	1					
13	97602–04312	SCREW, PAN HEAD WITH WASHER	1					
14	BW3–25872–01	HOSE, BRAKE 1	1					
15	BW3–25873–11	HOSE, BRAKE 2	1					
16	BW3–25874–01	HOSE, BRAKE 3	1					
17	90464–14013	CLAMP	3					
18	90401–10172	BOLT, UNION	4					
19	90401–10042	BOLT, UNION	1					
20	90430–10005	GASKET	11					
21	BW3–25876–10	HOLDER, BRAKE HOSE 2	1					
22	92017–06014	BOLT, BUTTON HEAD	1					
23	90464–18002	CLAMP	2					
24	90464–08012	CLAMP	2					
25	90464–48174	CLAMP	1					
26	90464–10233	CLAMP	2					

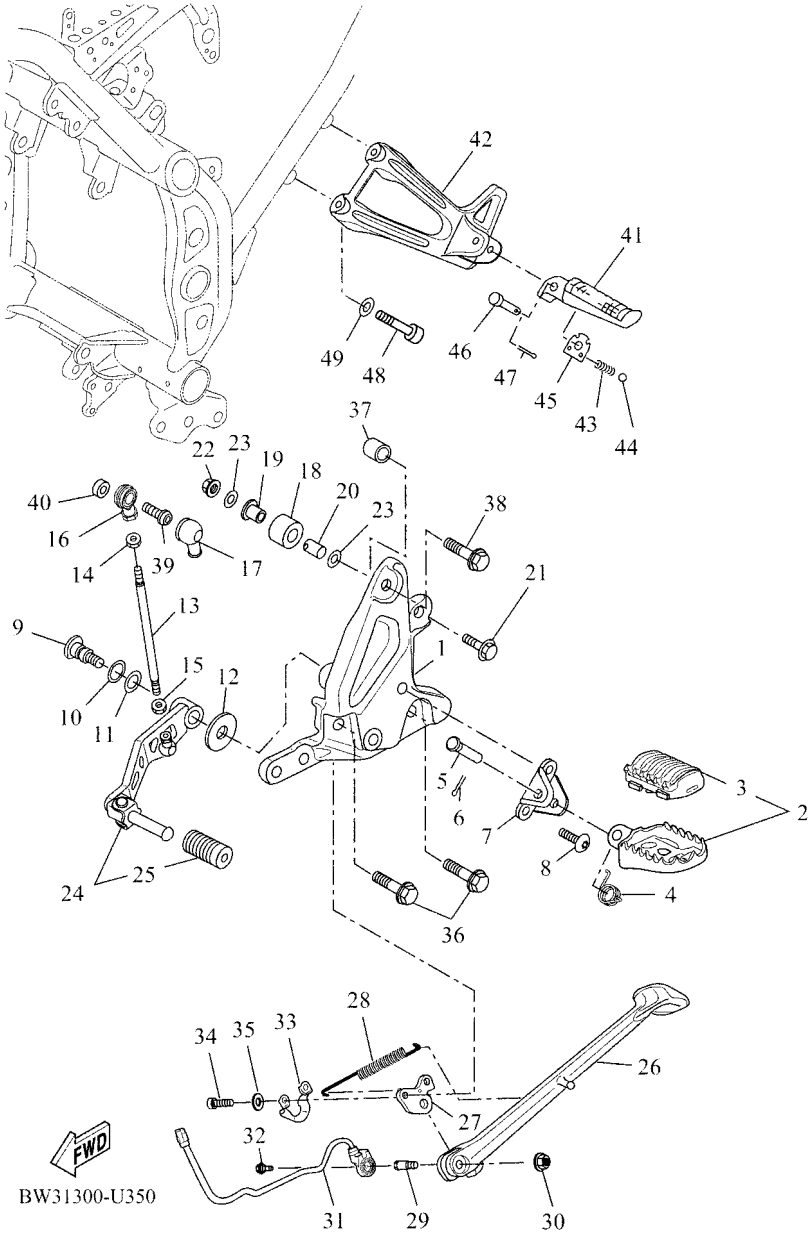

FIG. 35 STAND & FOOTREST

REF. NO.	PART NO.	DESCRIPTION	BYC1					REMARKS
1	BW3–F7442–00	BRACKET 2	1					
2	BW3–F7400–00	FOOTREST ASSY	1					
3	BW3–F7413–00	.COVER, FOOTREST	1					
4	90508–20061	SPRING, TORSION	1					
5	91702–10045	PIN, CLEVIS	1					
6	91402–25015	PIN, COTTER	1					
7	3D7–21447–00	BRACKET, FOOTREST	1					
8	90149–10031	SCREW	2					
9	4BP–27434–01	BOLT	1					
10	90206–12074	WASHER, WAVE	1					
11	90201–12051	WASHER, PLATE	1					
12	90201–08053	WASHER, PLATE	1					
13	BW3–18115–00	ROD, SHIFT	1					
14	90170–06026	NUT	1					
15	95314–06700	NUT	1					
16	5VX–18116–00	JOINT, ROD 1	1					
17	5VX–18154–00	COVER, DUST	1					
18	30X–22178–00	TENSIONER	1					
19	10V–22184–00	BUSH	1					
20	90387–08120	COLLAR	1					
21	95814–08050	BOLT, FLANGE	1					
22	95602–08200	NUT, U FLANGE	1					
23	90201–087H6	WASHER, PLATE	2					
24	BW3–18110–10	SHIFT PEDAL ASSY	1					
25	1WS–18113–00	.COVER, SHIFT PEDAL	1					
26	BW3–27311–00	STAND, SIDE	1					
27	BW3–27321–00	BRACKET, SIDE STAND	1					

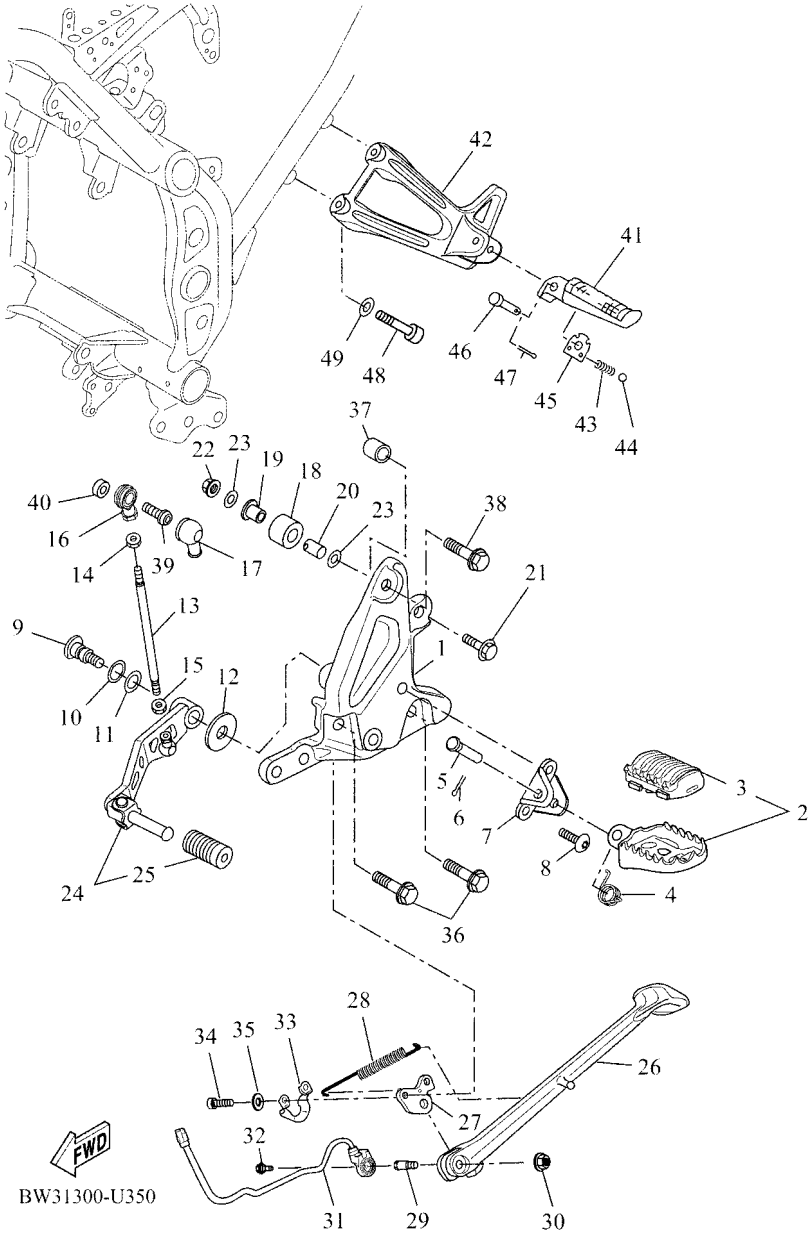

FIG. 35 STAND & FOOTREST

REF. NO.	PART NO.	DESCRIPTION	BYC1					REMARKS
28	BW3–27316–00	SPRING, SIDE STAND	1					
29	90109–10069	BOLT	1					
30	95602–10200	NUT, SELF-LOCKING	1					
31	BW3–82566–00	SWITCH, SIDE STAND	1					
32	90119–06193	BOLT, WITH WASHER	1					
33	BMB–27453–00	COVER 1	1					
34	90110–12011	BOLT, HEXAGON SOCKET HEAD	2					
35	90201–12068	WASHER, PLATE	2					
36	90105–10485	BOLT, FLANGE	2					
37	90445–14M39	HOSE (L10)	1					
38	90105–08063	BOLT, FLANGE	1					
39	90111–06098	BOLT, HEXAGON SOCKET BUTTON	1					
40	90387–06372	COLLAR	1					
41	B7N–27431–00	FOOTREST, REAR 1	1					
42	BNW–F741L–00	BRACKET 4	1					
43	90501–12743	SPRING, COMPRESSION	1					
44	93501–04011	BALL	1					
45	5VX–27437–00	WASHER, SPECIAL	1					
46	91702–08040	PIN, CLEVIS	1					
47	91401–25015	PIN, COTTER	1					
48	91312–08040	BOLT, HEXAGON SOCKET HEAD	2					
49	92902–08600	WASHER, PLATE	2					

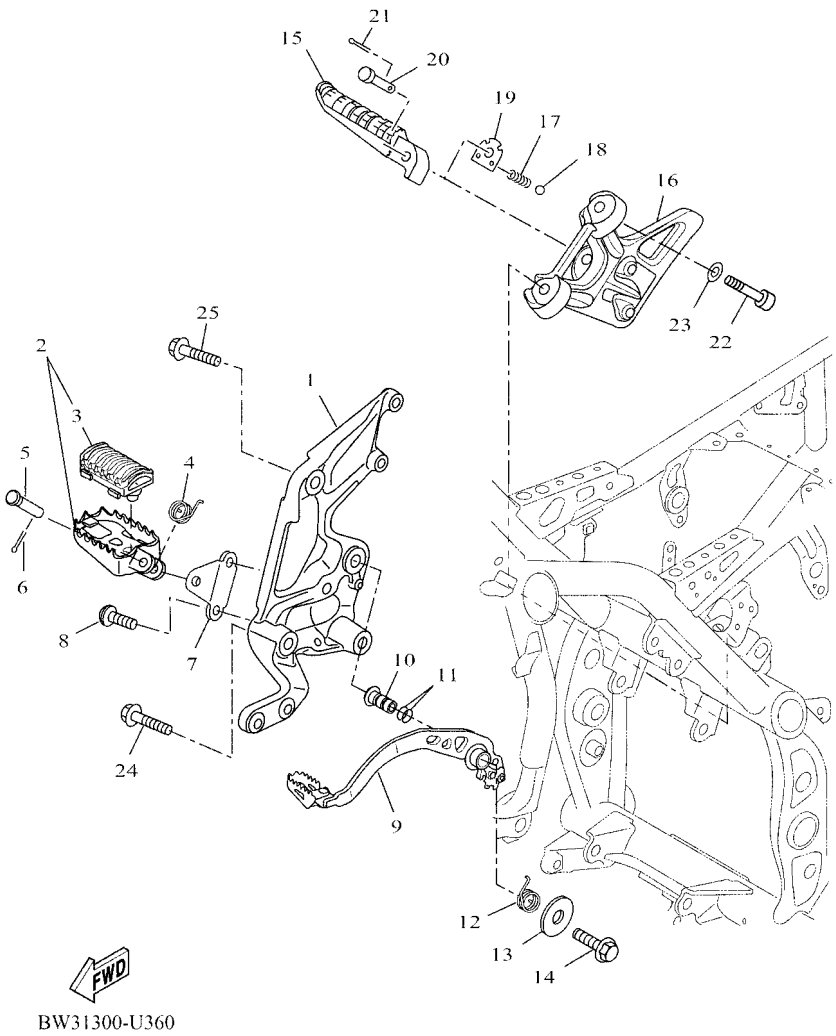

FIG. 36 STAND & FOOTREST 2

REF. NO.	PART NO.	DESCRIPTION	BYC1					REMARKS
1	BW3–F7443–00	BRACKET 3	1					
2	BW3–F7404–00	FOOTREST ASSY 2	1					
3	BW3–F7413–00	.COVER, FOOTREST	1					
4	90508–20080	SPRING, TORSION	1					
5	91702–10045	PIN, CLEVIS	1					
6	91402–25015	PIN, COTTER	1					
7	3D7–21447–00	BRACKET, FOOTREST	1					
8	90149–10031	SCREW	2					
9	BW3–27200–01	PEDAL, BRAKE	1					
10	BMB–27213–00	COLLAR	1					
11	93210–15414	O-RING	2					
12	5EL–27216–00	SPRING, RETURN	1					
13	90201–10028	WASHER, PLATE	1					
14	90105–10292	BOLT, FLANGE	1					
15	B7N–27441–00	FOOTREST, REAR 2	1					
16	BNW–F742L–00	BRACKET 5	1					
17	90501–12743	SPRING, COMPRESSION	1					
18	93501–04011	BALL	1					
19	5VX–27437–00	WASHER, SPECIAL	1					
20	91702–08040	PIN, CLEVIS	1					
21	91401–25015	PIN, COTTER	1					
22	91312–08040	BOLT, HEXAGON SOCKET HEAD	2					
23	92902–08600	WASHER, PLATE	2					
24	95024–10045	BOLT, FLANGE (SMALL HEAD)	2					
25	90105–08063	BOLT, FLANGE	1					

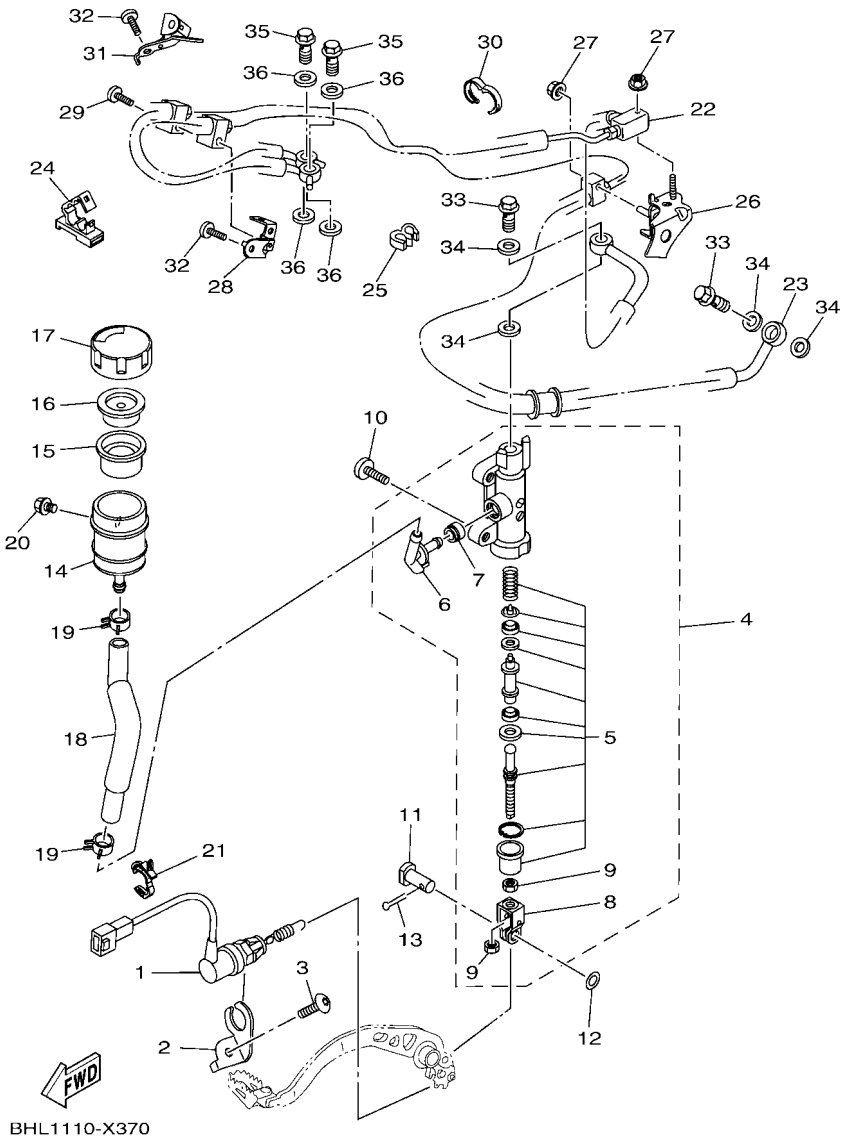

FIG. 37 REAR MASTER CYLINDER

REF. NO.	PART NO.	DESCRIPTION	BYC1					REMARKS
1	BW3–82530–01	STOP SWITCH ASSY	1					
2	5PS–2144G–00	STAY, STOP SWITCH	1					
3	92017–06012	BOLT, BUTTON HEAD	1					
4	4P5–2583V–00	RR. MASTER CYLINDER ASSY.	1					
5	5VX–W0042–51	.CYLINDER KIT, MASTER	1					
6	2D1–2582A–00	.JOINT	1					
7	4BP–2585F–01	.O-RING	1					
8	4BP–27222–02	.JOINT	1					
9	90170–08010	.NUT	2					
10	92014–08025	BOLT, BUTTON HEAD	2					
11	90240–08005	PIN, CLEVIS	1					
12	90201–08070	WASHER, PLATE	1					
13	91401–20012	PIN, COTTER	1					
14	2D1–25894–00	TANK, RESERVOIR	1					
15	5SL–25854–00	DIAPHRAGM, RESERVOIR	1					
16	5SL–25855–00	BUSH,DIAPHRAGM	1					
17	5SL–25852–00	CAP, RESERVOIR	1					
18	BW3–25895–00	HOSE, RESERVOIR	1					
19	90467–120A3	CLIP	2					
20	90119–05021	BOLT, WITH WASHER	1					
21	90464–08012	CLAMP	2					
22	BW3–2584D–02	HOSE, BRAKE	1					
23	BW3–2584E–02	BRAKE HOSE ASSY 5	1					
24	90464–07014	CLAMP	1					
25	90464–04001	CLAMP	2					
26	BW3–2588F–00	HOLDER, BRAKE HOSE 5	1					
27	95707–06500	NUT, FLANGE	2					

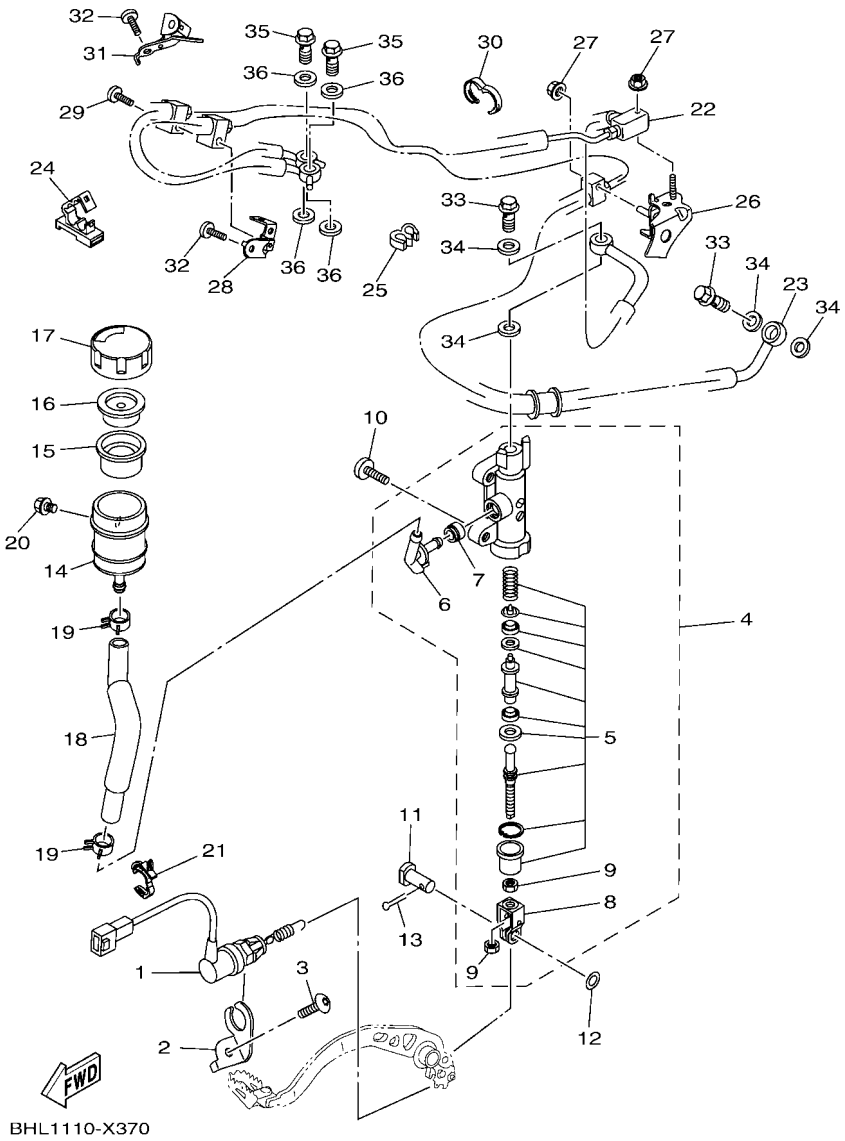

FIG. 37 REAR MASTER CYLINDER

REF. NO.	PART NO.	DESCRIPTION	BYC1					REMARKS
28	1XB–2175T–00	BRACKET 1	1					
29	92012–06040	BOLT, BUTTON HEAD	1					
30	90464–18004	CLAMP	1					
31	BAU–2175U–00	BRACKET 2	1					
32	92017–06012	BOLT, BUTTON HEAD	2					
33	90401–10020	BOLT, UNION	2					
34	90430–10005	GASKET	4					
35	90401–10172	BOLT, UNION	2					
36	90430–10005	GASKET	4					

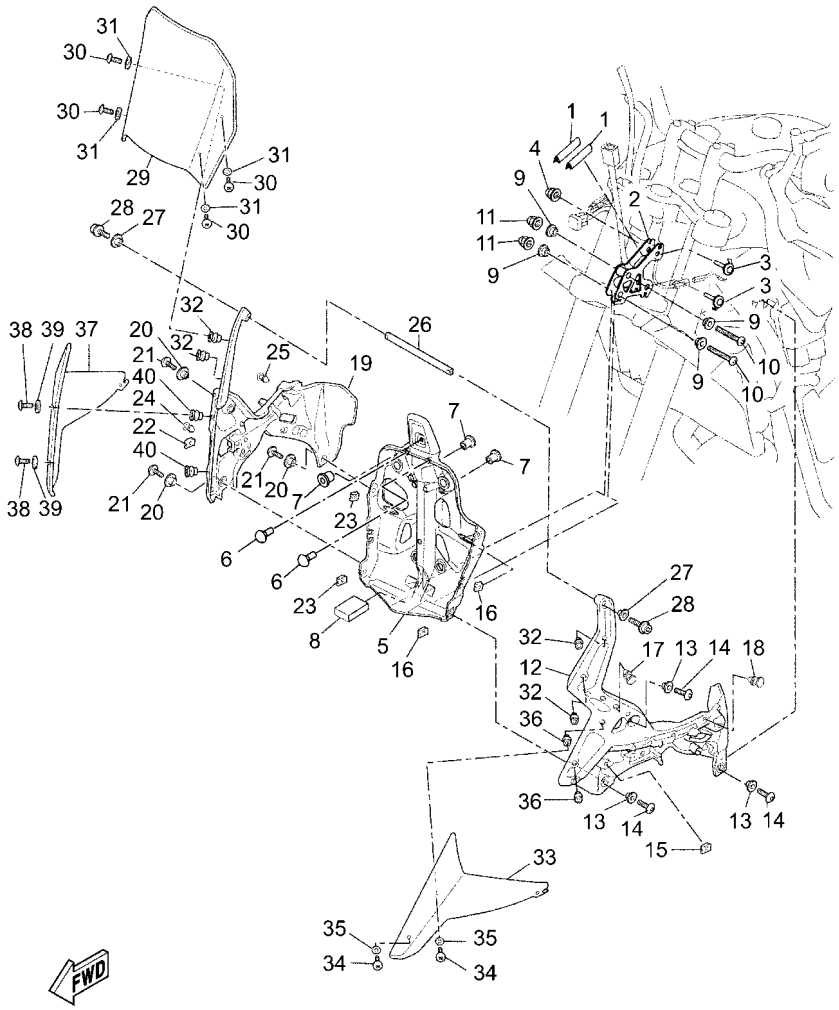

BVW1110-Z380

FIG. 38 COWLING 1

REF. NO.	PART NO.	DESCRIPTION	BYC1					REMARKS
1	5VN–24188–00	MOLD, FUEL TANK	2					
2	BW3–2831V–10	STAY, HEAD LIGHT 1	1					
3	BW3–28336–00	PLATE	2					
4	90176–08009	NUT, CAP	2					
5	BAG–F8321–00	STAY 1	1					
6	90338–05009	PLUG	2					
7	90387–06255	COLLAR	3					
8	90520–15019	DAMPER, PLATE	1					
9	90387–08115	COLLAR	4					
10	92017–08050	BOLT, BUTTON HEAD	2					
11	90176–08009	NUT, CAP	2					
12	BMB–2836K–01	PANEL, INNER 1	1					
13	90387–06142	COLLAR	3					
14	90111–06038	BOLT, HEXAGON SOCKET BUTTON	3					
15	90183–050A6	NUT, SPRING	1					
16	90183–062A1	NUT, SPRING	2					
17	90338–06018	PLUG	3					
18	90338–06018	PLUG	4					
19	BMB–2836L–00	PANEL, INNER 2	1					
20	90387–06142	COLLAR	3					
21	90111–06038	BOLT, HEXAGON SOCKET BUTTON	3					
22	90183–050A6	NUT, SPRING	1					
23	90183–062A1	NUT, SPRING	2					
24	90338–06018	PLUG	3					
25	90338–06018	PLUG	4					
26	BMB–2831T–00	STAY, SUPPORT 1	1					
27	90387–06255	COLLAR	2					

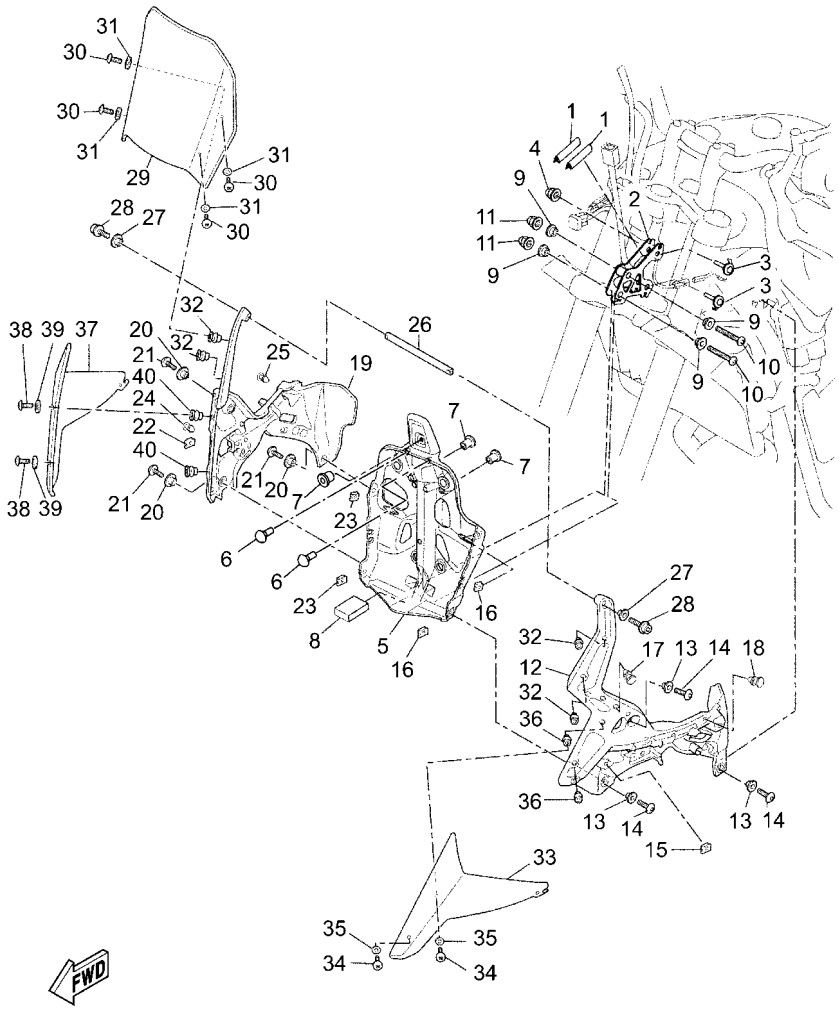

BVW1110-Z380

FIG. 38 COWLING 1

REF. NO.	PART NO.	DESCRIPTION	BYC1					REMARKS
28	90110–06110	BOLT, HEXAGON SOCKET HEAD	2					
29	BMB–28381–00	WINDSHIELD	1					
30	90111–05017	BOLT, HEXAGON SOCKET BUTTON	4					
31	90202–05004	WASHER, PLATE	4					
32	90179–05523	NUT	4					
33	BMB–283M3–00	DEFLECTOR	1					
34	90111–05017	BOLT, HEXAGON SOCKET BUTTON	2					
35	90202–05004	WASHER, PLATE	2					
36	90179–05523	NUT	2					
37	BMB–283M4–00	DEFLECTOR 2	1					
38	90111–05017	BOLT, HEXAGON SOCKET BUTTON	2					
39	90202–05004	WASHER, PLATE	2					
40	90179–05523	NUT	2					

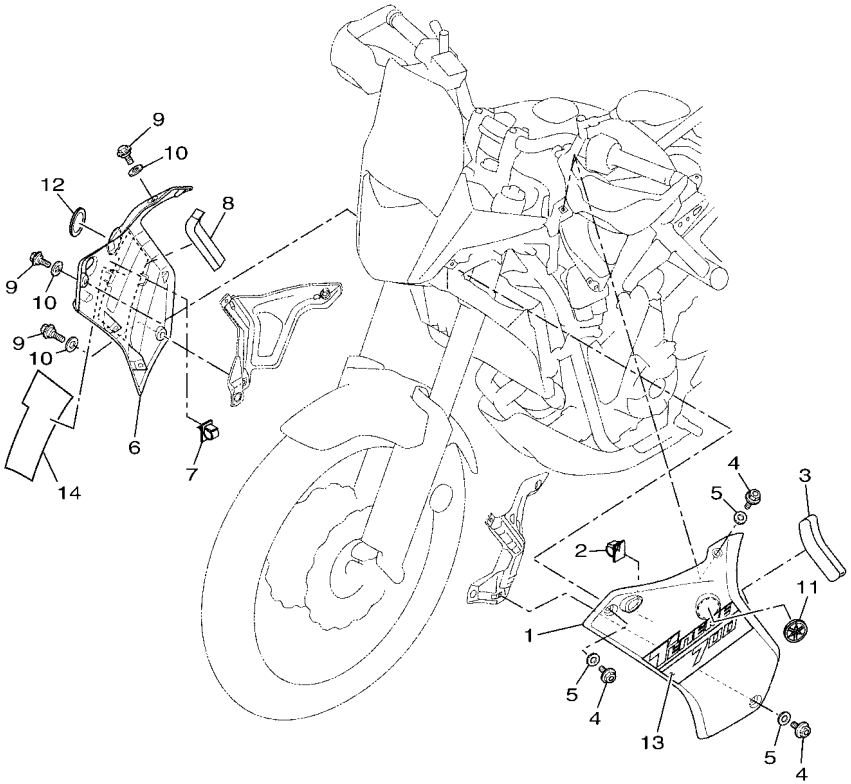

BMB3450-Y390

FIG. 39 COWLING 2

REF. NO.	PART NO.	DESCRIPTION	BYC1					REMARKS
1	BMB–2835U–00–P0	PANEL 1	1					DPBMC
2	90464–25160	CLAMP	1					
3	90520–15018	DAMPER, PLATE	1					
4	90149–05042	SCREW	3					
5	90202–08006	WASHER, PLATE	3					
6	BMB–2835V–00–P0	PANEL 2	1					DPBMC
7	90464–25160	CLAMP	1					
8	90520–15018	DAMPER, PLATE	1					
9	90149–05042	SCREW	3					
10	90202–08006	WASHER, PLATE	3					
11	1RC–2413B–01	EMBLEM	1					
12	1RC–2413B–01	EMBLEM	1					
13	BMB–28391–00	GRAPHIC 1	1					
14	BMB–28392–00	GRAPHIC 2	1					

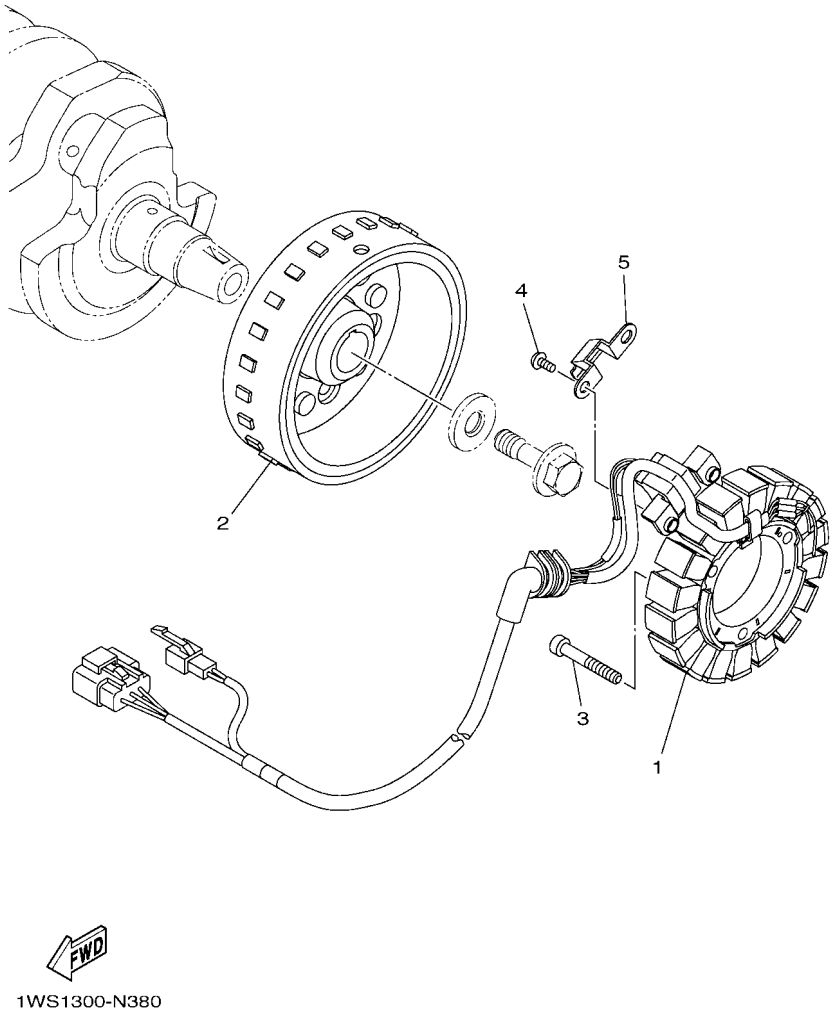

FIG. 40 GENERATOR

REF. NO.	PART NO.	DESCRIPTION	BYC1					REMARKS
1	1WS–81410–00	STATOR ASSY	1					
2	BAT–81450–00	ROTOR ASSY	1					
3	90110–06177	BOLT, HEXAGON SOCKET HEAD	3					
4	90149–06109	SCREW	2					
5	1WS–15484–00	CLAMP 2	1					

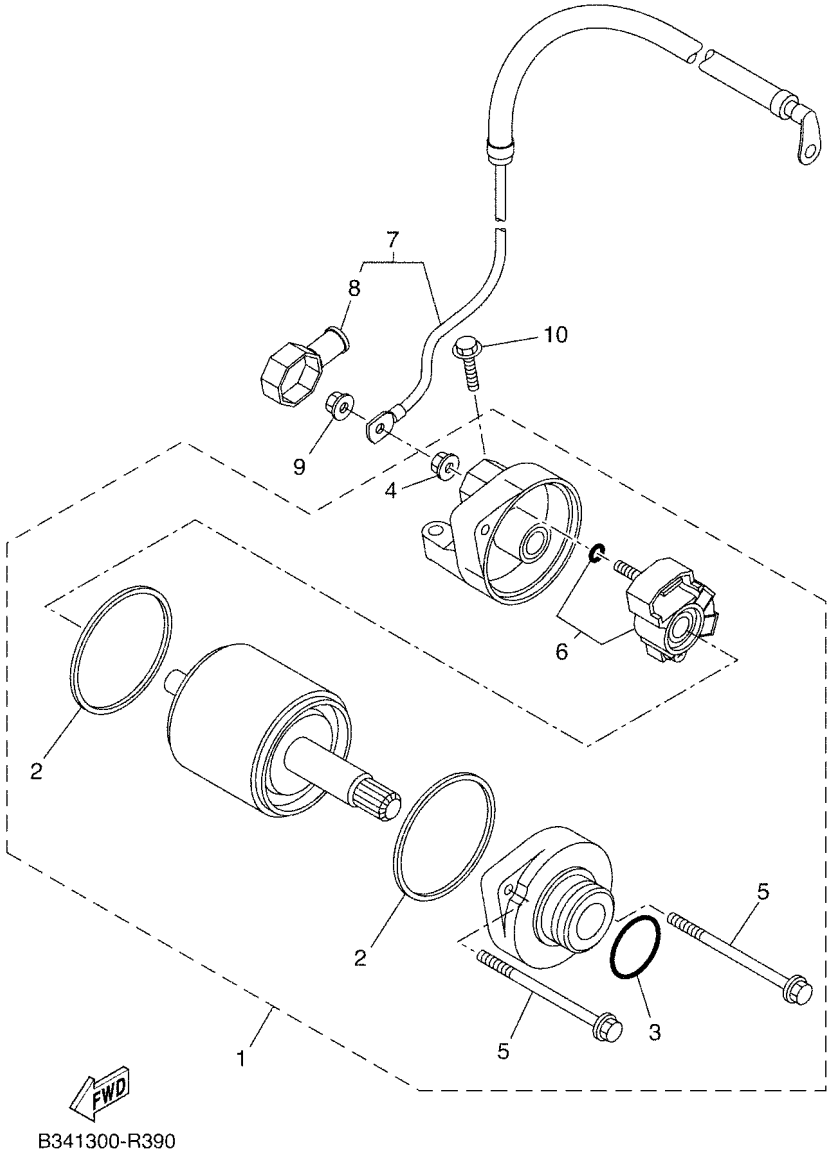

FIG. 41 STARTING MOTOR

REF. NO.	PART NO.	DESCRIPTION	BYC1					REMARKS
1	1WS–81890–00	MOTOR ASSY	1					
2	4B5–81844–00	.GASKET	2					
3	1FK–81847–00	.O-RING	1					
4	4XV–8182A–00	.NUT	1					
5	18P–81826–00	.BOLT	2					
6	18P–81801–00	.BRUSH SET	1					
7	BW3–81815–00	CORD, STARTER MOTOR	1					
8	4B5–81871–00	.CAP	1					
9	4XV–8182A–00	NUT	1					
10	91312–06025	BOLT, HEXAGON SOCKET HEAD	2					

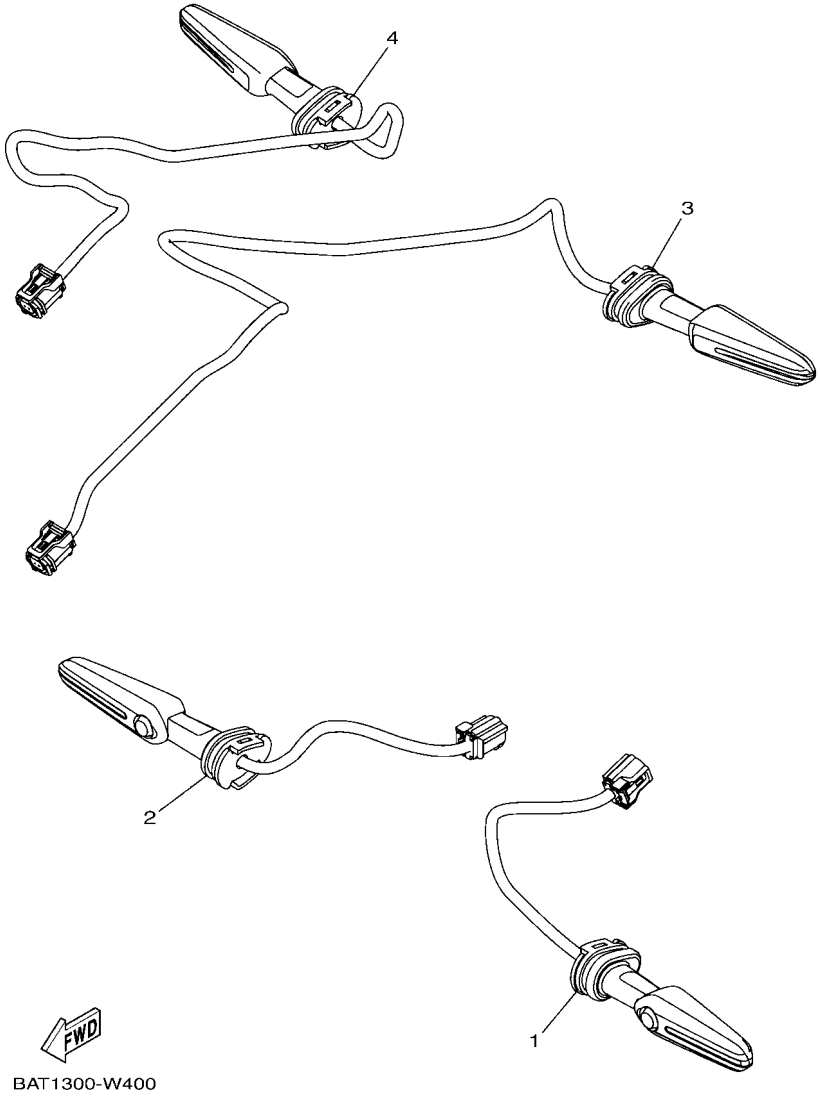

FIG. 42 FLASHER LIGHT

REF. NO.	PART NO.	DESCRIPTION	BYC1					REMARKS
1	BAT–83310–00	FRONT FLASHER LIGHT ASSY 1	1					
2	BAT–83320–00	FRONT FLASHER LIGHT ASSY 2	1					
3	BVW–8330C–00	FLASHER LIGHT ASSY C	1					
4	BVW–8330C–10	FLASHER LIGHT ASSY C	1					

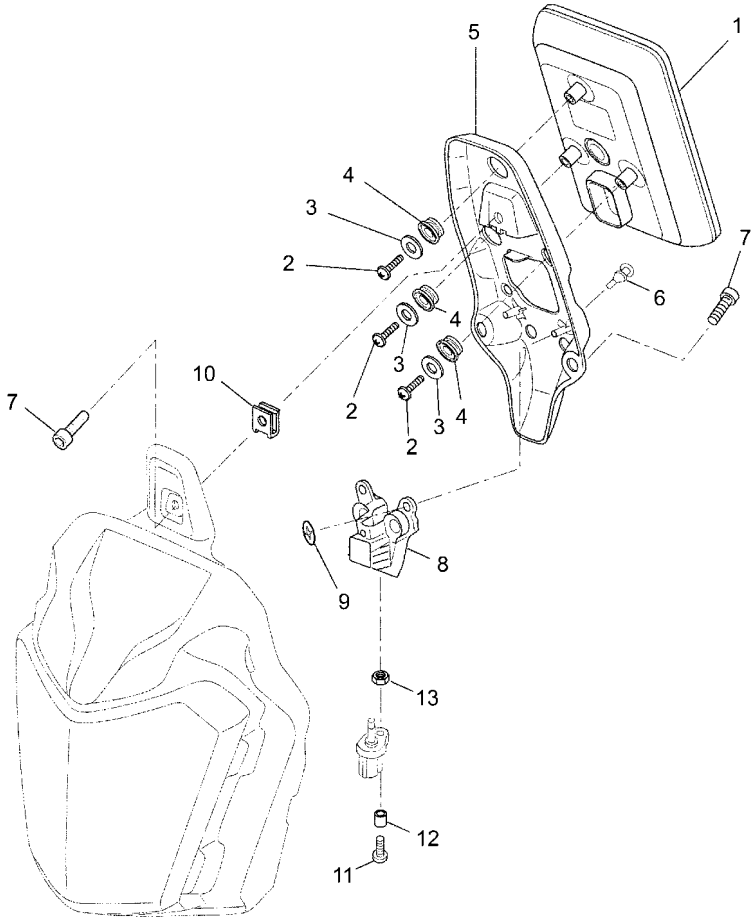

BVW1110-Z430

FIG. 43 METER

REF. NO.	PART NO.	DESCRIPTION	BYC1					REMARKS
1	BNW–83500–00	METER ASSY	1					
2	92017–05010	BOLT, BUTTON HEAD	3					
3	90201–05032	WASHER, PLATE	3					
4	5PS–83513–00	DAMPER	3					
5	BAG–F834L–00	BRKT., METER	1					
6	90338–05009	PLUG	2					
7	90110–06398	BOLT, HEXAGON SOCKET HEAD	3					
8	BAG–H6016–00	COVER, SENSOR	1					
9	90183–05M02	NUT, SPRING	2					
10	90183–062A1	NUT, SPRING	1					
11	91317–05020	BOLT, HEXAGON SOCKET HEAD	1					
12	90387–05679	COLLAR	1					
13	95617–05100	NUT, U	1					

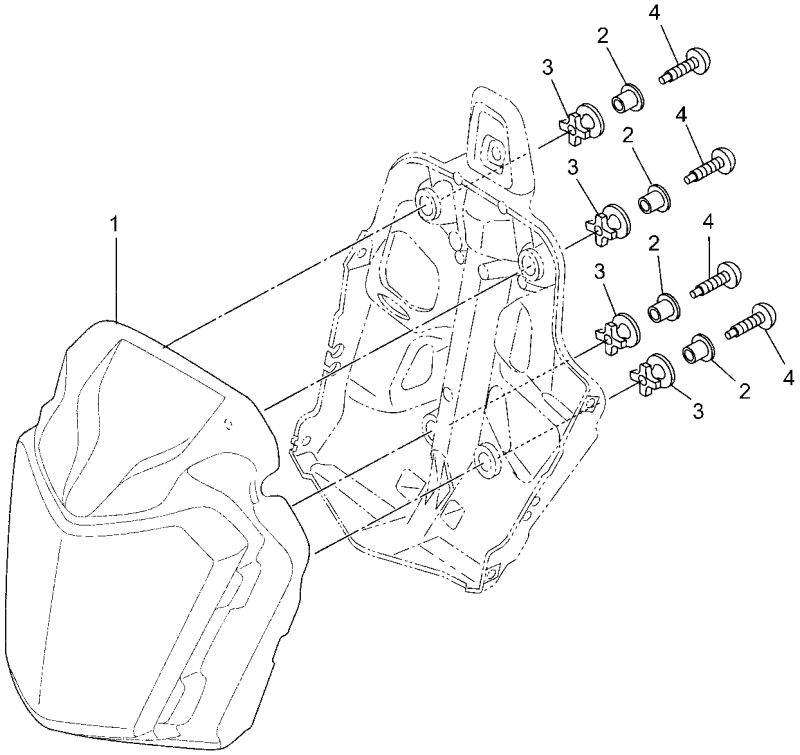

BVW1110-Z440

FIG. 44 HEADLIGHT

REF. NO.	PART NO.	DESCRIPTION	BYC1					REMARKS
1	BAG–H4300–00	HEADLIGHT ASSY	1					
2	90387–06300	COLLAR	4					
3	90480–15001	GROMMET	4					
4	90111–06179	BOLT, HEXAGON SOCKET BUTTON	4					

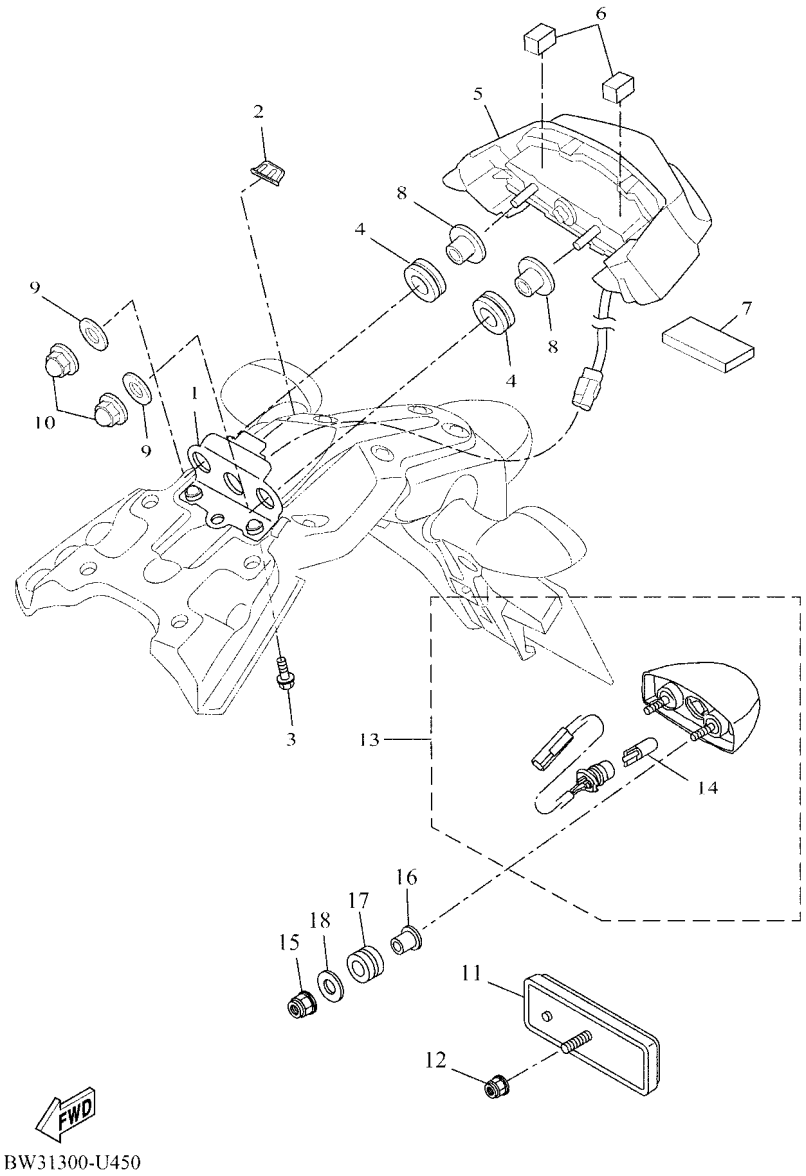

FIG. 45 TAILLIGHT

REF. NO.	PART NO.	DESCRIPTION	BYC1					REMARKS
1	BMB–2117E–00	BRACKET, TAILLIGHT	1					
2	2N4–21717–00	DAMPER	1					
3	90149–05042	SCREW	2					
4	90480–18276	GROMMET	2					
5	BW3–H4700–00	TAILLIGHT ASSY	1					
6	90520–15020	DAMPER, PLATE	2					
7	90520–07004	DAMPER, PLATE	1					
8	90387–06150	COLLAR	2					
9	90201–06023	WASHER, PLATE	2					
10	90176–06008	NUT, CAP	2					
11	3Y6–85130–02	REAR REFLECTOR ASSY	1					
12	95602–05200	NUT, SELF-LOCKING	1					
13	BEE–H4740–00	LICENSE LIGHT ASSY	1					
14	1TP–84347–00	.BULB (12V-5W)	1					
15	95602–05200	NUT, SELF-LOCKING	2					
16	90387–05042	COLLAR	2					
17	90480–12023	GROMMET	2					
18	90201–054K4	WASHER, PLATE	2					

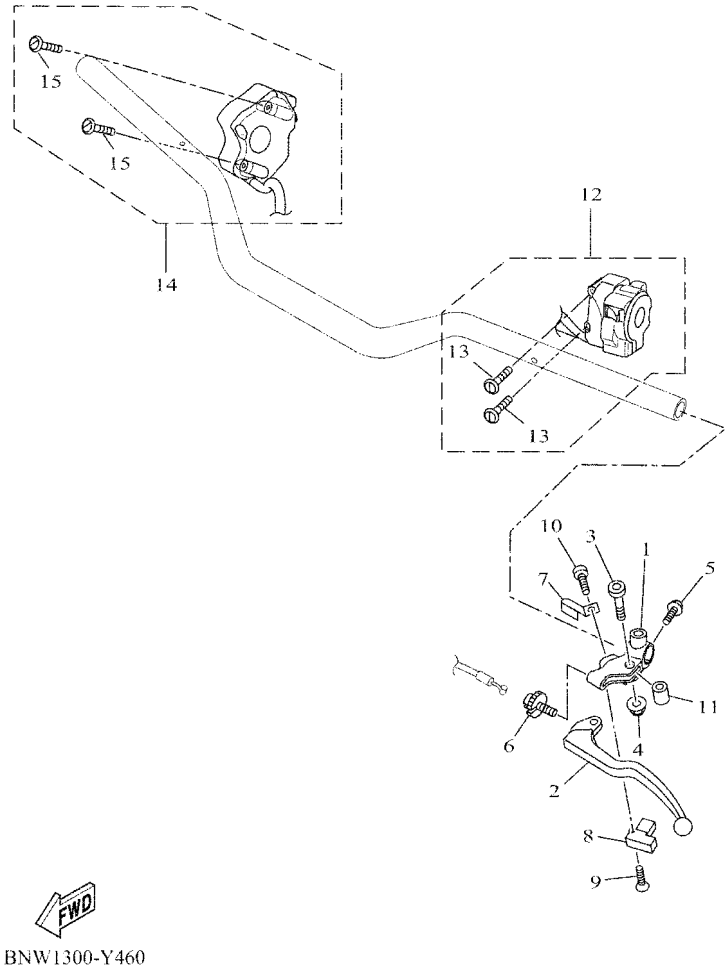

FIG. 46 HANDLE SWITCH & LEVER

REF. NO.	PART NO.	DESCRIPTION	BYC1					REMARKS
1	1B3–82911–00	HOLDER, LEVER 1	1					
2	5EB–83912–03	LEVER 1	1					
3	2C0–83945–00	BOLT, LEVER	1					
4	95607–06200	NUT, SELF U-FLANGE	1					
5	95027–06020	BOLT, FLANGE	1					
6	5LV–83951–00	BOLT, CABLE ADJUSTING	1					
7	4XV–83929–00	PLATE, SPRING	1					
8	3YX–82917–01	SWITCH	1					
9	98704–03020	SCREW, FLAT HEAD	1					
10	98507–04010	SCREW, PAN HEAD	1					
11	5JJ–83913–00	COLLAR, LEVER 1	1					
12	BNW–83969–00	SWITCH, HANDLE 5	1					
13	98507–05025	.SCREW, PAN HEAD	2					
14	BAG–83963–02	SWITCH, HANDLE 3	1					
15	98507–05020	.SCREW, PAN HEAD	2					

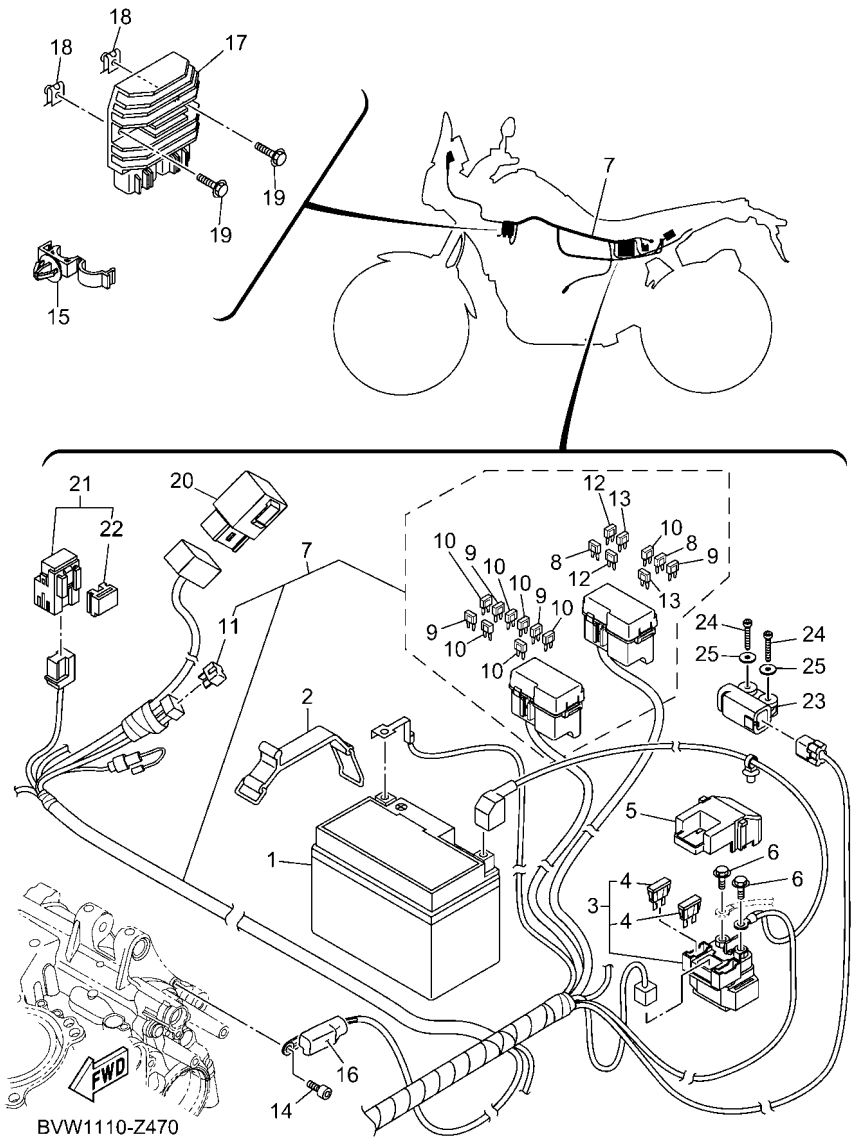

FIG. 47 ELECTRICAL 1

REF. NO.	PART NO.	DESCRIPTION	BYC1					REMARKS
1	5TJ–82100–01	BATTERY ASSY (YTZ7S(F))	1					
2	4BP–82131–00	BAND, BATTERY	1					
3	1XC–81940–00	STARTER RELAY ASSY (RC19-089B)	1					
4	1AE–82151–00	.FUSE (30A-BL)	2					
5	5SL–82119–10	COVER, LEAD WIRE	1					
6	95022–06008	BOLT, FLANGE	2					
7	BNW–82590–00	WIRE HARNESS ASSY	1					
8	5JJ–82151–80	.FUSE (2A-BL)	2					
9	5JJ–82151–00	.FUSE (7.5A-BL)	4					
10	5JJ–82151–30	.FUSE (10A-BL)	7					
11	3WP–81980–00	.DIODE ASSY	1					
12	5JJ–82151–20	.FUSE (20A-BL)	2					
13	5JJ–82151–60	.FUSE (30A-BL)	2					
14	91380–06012	BOLT	1					
15	90464–17003	CLAMP	1					
16	1WS–81916–00	COVER, TERMINAL	1					
17	1D7–81960–10	RECTIFIER & REGULATOR ASSY	1					
18	90183–060A6	NUT, SPRING	2					
19	90105–06148	BOLT, FLANGE	2					
20	5VK–81950–31	RELAY ASSY (G8R-30Y-V3)	1					
21	1TP–81950–00	RELAY ASSY (1TP-00)	1					
22	5EA–81952–00	.HOLDER, RELAY	1					
23	5PS–82576–01	SENSOR, LEAN ANGLE	1					
24	91312–04025	BOLT, HEXAGON SOCKET HEAD	2					
25	90201–04030	WASHER, PLATE	2					

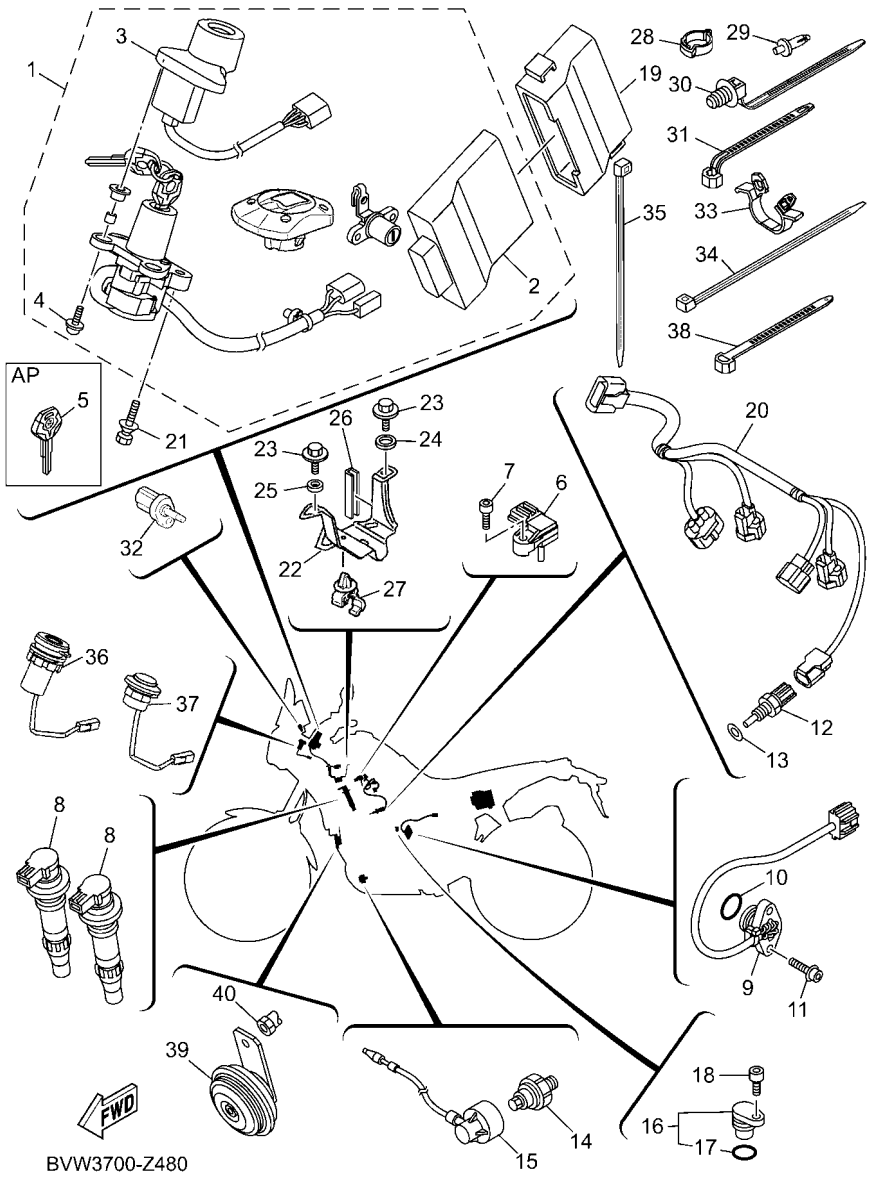

FIG. 48 ELECTRICAL 2

REF. NO.	PART NO.	DESCRIPTION	BYC1					REMARKS
1	BVW–W8250–50	MAIN SW. IMMOBILIZER KIT	1					
2	BNW–8591A–50	.ENGINE CONTROL UNIT ASSY	1					
3	BEH–8255P–01	.IMMOBILIZER. UNIT COMP.	1					
4	5SL–82113–01	.SCREW	2					
5	BW3–82511–09	BLANK KEY	1					AP
6	1WS–82380–00	SENSOR, PRESSURE	1					
7	91312–05020	BOLT, HEXAGON SOCKET HEAD	1					
8	1WS–82310–00	IGNITION COIL ASSY	2					
9	1WS–82540–00	NEUTRAL SWITCH ASSY	1					
10	93210–21001	O-RING	1					
11	90110–05067	BOLT, HEXAGON SOCKET HEAD	2					
12	4P9–83591–00	THERMO UNIT	1					
13	90430–10004	GASKET	1					
14	1WS–82504–01	OIL PRESSURE SWITCH ASSY	1					
15	BEH–81315–00	LEAD WIRE ASSY	1					
16	3P6–15399–00	PLUG, BLIND	1					
17	93210–15566	.O-RING	1					
18	91312–06016	BOLT, HEXAGON SOCKET HEAD	1					
19	B34–H5546–00	BAND	1					
20	BW3–H2309–00	WIRE, SUB LEAD	1					
21	90109–08195	BOLT	2					
22	BMB–88195–00	HOLDER, CONNECTOR	1					
23	90119–06209	BOLT, WITH WASHER	2					
24	90387–1001B	COLLAR	1					
25	90387–06372	COLLAR	1					
26	31A–24188–01	MOLD, FUEL TANK	1					
27	90464–10800	CLAMP	1					

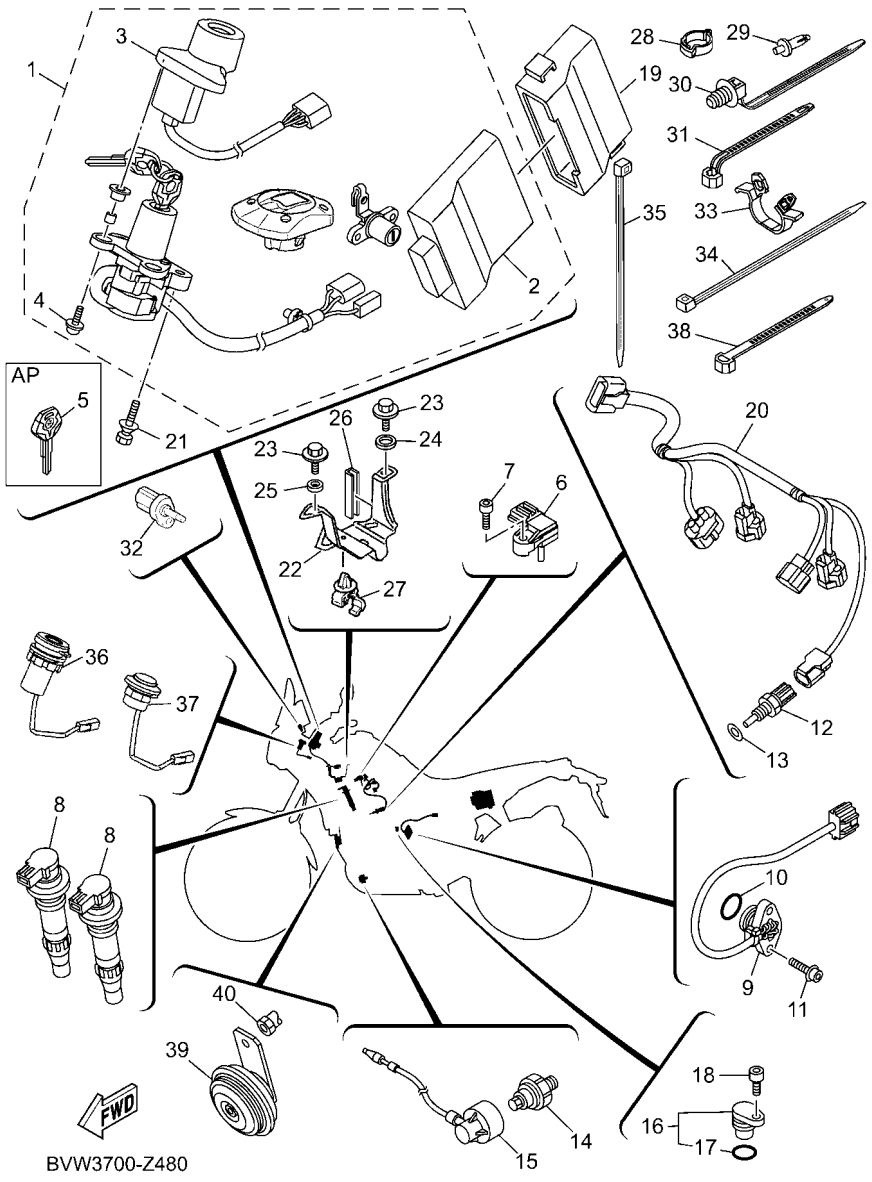

FIG. 48 ELECTRICAL 2

REF. NO.	PART NO.	DESCRIPTION	BYC1					REMARKS
28	90464–14010	CLAMP	3					
29	90269–06008	RIVET	1					
30	90464–30009	CLAMP	2					
31	90464–13073	CLAMP	3					(125.0x7.0)
32	5YU–85886–00	SENSOR, AIR TEMPERATURE	1					
33	90464–24230	CLAMP	1					
34	90464–65001	CLAMP	11					
35	90464–80002	CLAMP	1					
36	B0J–H21E0–01	USB ASSY	1					
37	BAG–8358J–01	SWITCH, METER CONTROL	1					
38	90465–13M24	CLAMP	1					
39	1WS–83371–00	HORN	1					
40	90179–06018	NUT	1					

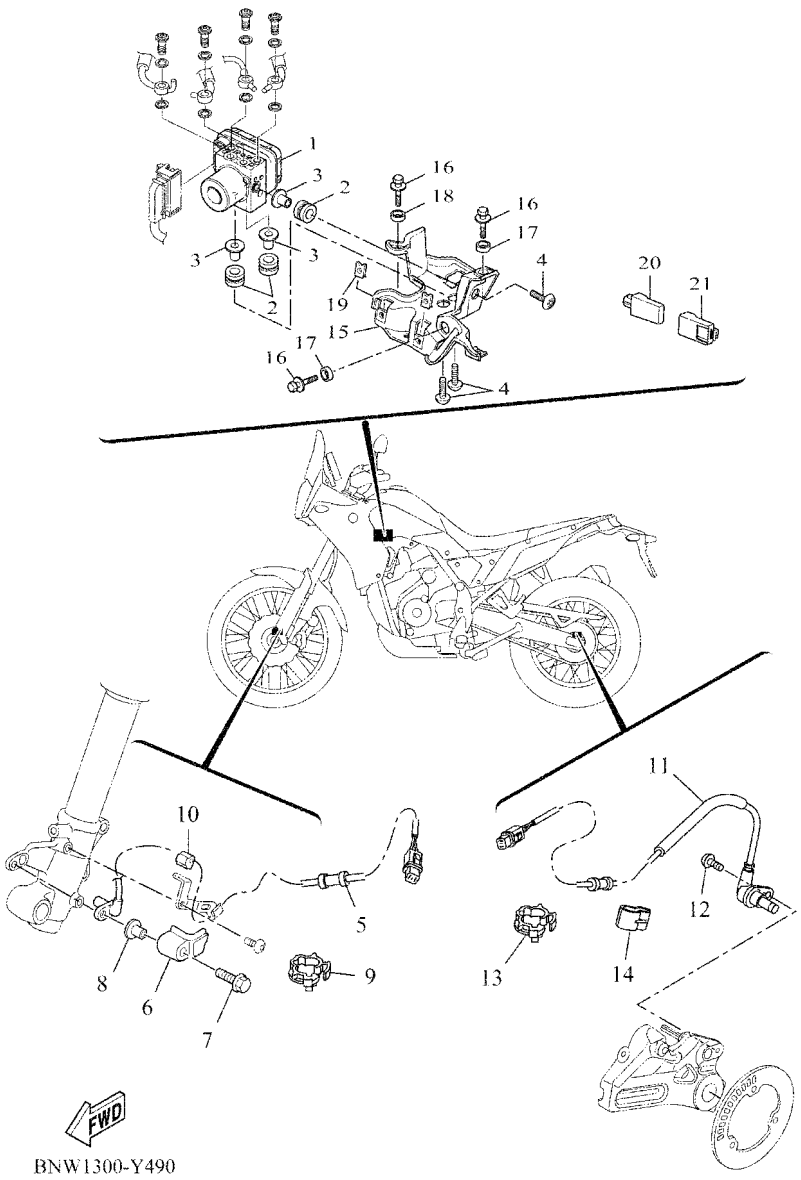

FIG. 49 ELECTRICAL 3

REF. NO.	PART NO.	DESCRIPTION	BYC1					REMARKS
1	BAG–85930–09	HYDRAULIC UNIT ASSY	1					
2	90480–14229	GROMMET	3					
3	90387–06313	COLLAR	3					
4	90111–06051	BOLT, HEXAGON SOCKET BUTTON	3					
5	BW3–85970–02	WHEEL SENSOR ASSY, FRONT	1					
6	BMB–2517A–00	HOUSING, SENSOR FRONT	1					
7	95824–06030	BOLT, FLANGE	1					
8	90387–06221	COLLAR	1					
9	90464–12013	CLAMP	3					
10	90464–05188	CLAMP	1					
11	BW3–85980–01	WHEEL SENSOR ASSY, REAR	1					
12	95802–06016	BOLT, FLANGE	1					
13	90464–12013	CLAMP	1					
14	90464–10233	CLAMP	4					
15	BMB–85991–00	BRACKET, UNIT	1					
16	90119–06209	BOLT, WITH WASHER	3					
17	90387–1001B	COLLAR	2					
18	90387–06372	COLLAR	1					
19	90183–05076	NUT, SPRING	1					
20	B6Y–H5810–10	COMMUNICATION CONT. UNIT ASSY	1					
21	BAG–H5546–00	BAND	1					

PART NO.	REF. NO.
1WS–11101–08	1 – 1
5VY–1111G–00	1 – 11
	1 – 22
4D9–11133–10	1 – 2
1WS–11165–01	1 – 17
BAU–11166–00	9 – 21
1WS–11169–00	1 – 18
1WS–11181–00	1 – 14
1WS–11190–02	1 – 16
1WS–11193–01	1 – 20
214–11198–01	8 – 7
1WS–11400–00	2 – 1
2S3–11413–00	2 – 22
2S3–11413–10	2 – 22
2S3–11413–20	2 – 22
2S3–11413–30	2 – 22
2S3–11413–40	2 – 22
3GM–11416–00	2 – 5
3GM–11416–10	2 – 5
3GM–11416–20	2 – 5
3GM–11416–A0	2 – 5
3GM–11416–B0	2 – 5
1WS–11454–00	2 – 14
1WS–11496–00	2 – 15
1WS–11500–00	2 – 13
1WS–11531–00	2 – 16
1WS–11533–00	2 – 19
1WS–11603–01	2 – 7
1WS–11631–00	2 – 6
1WS–11633–00	2 – 8
1WS–11650–00	2 – 2
1RC–11654–00	2 – 3
1RC–11656–00	2 – 4
1RC–11656–10	2 – 4
1RC–11656–20	2 – 4
1RC–11656–30	2 – 4
1WS–12111–01	3 – 1
1WS–12113–01	3 – 3
1WS–12114–00	3 – 4
1WS–12116–00	3 – 8
1WS–12117–00	3 – 5
1WG–12118–00	3 – 6
4TE–12119–00	3 – 7
1WS–12121–01	3 – 2
B4T–12153–00	3 – 9
4C8–12153–09	3 – 9
1HX–12168–F0	3 – 10
1HX–12168–H1	3 – 10

PART NO.	REF. NO.
1HX–12168–K1	3 – 10
1HX–12168–M1	3 – 10
1HX–12168–R1	3 – 10
1HX–12168–U1	3 – 10
1HX–12168–W1	3 – 10
1HX–12168–Y1	3 – 10
1HX–12169–11	3 – 10
1HX–12169–31	3 – 10
1HX–12169–50	3 – 10
1HX–12169–70	3 – 10
1HX–12169–90	3 – 10
1HX–12169–E0	3 – 10
1HX–12169–G0	3 – 10
1HX–12169–J0	3 – 10
1HX–12169–L0	3 – 10
1HX–12169–N0	3 – 10
1HX–12169–T0	3 – 10
1WS–12170–00	4 – 1
BU3–12176–00	4 – 2
1WS–12180–10	4 – 4
1WS–12210–02	4 – 12
1WS–12213–00	4 – 15
5SL–12214–00	4 – 14
5EL–12228–00	4 – 13
1WS–12247–00	4 – 8
1WS–12251–00	4 – 17
1WS–12252–00	4 – 18
1WS–12257–00	4 – 9
1WS–12280–00	4 – 6
1PD–12288–00	4 – 10
BW3–12405–00	6 – 2
1WS–12410–01	5 – 18
1WS–12413–00	5 – 19
1WS–12420–01	5 – 25
1WS–12422–00	5 – 38
5VK–12438–00	5 – 35
1WS–12439–00	5 – 39
1WS–12450–00	5 – 33
BW3–12461–00	6 – 1
B67–12462–10	6 – 9
1WS–12469–00	5 – 15
BEH–1246A–00	5 – 14
1WS–12481–01	5 – 1
1WS–12482–01	5 – 3
BMB–12498–00	6 – 11
1WS–12576–00	5 – 9
BW3–12577–00	5 – 10
BW3–12578–00	6 – 16

PART NO.	REF. NO.
1WS–12588–00	5 – 21
1WS–12589–00	5 – 23
1WS–12671–00	6 – 4
2S3–12675–00	6 – 5
5VY–13117–10	7 – 10
1WS–13300–00	7 – 1
2CR–13338–00	5 – 36
1WS–13400–00	8 – 5
1WS–13410–00	7 – 7
1WS–13414–00	8 – 8
5GH–13440–61	8 – 4
1WS–13470–00	8 – 1
1XD–13475–00	8 – 2
BEH–13542–00	9 – 4
8FP–13556–00	10 – 2
8GL–13571–00	10 – 12
8HG–13573–00	10 – 11
1WS–13635–00	9 – 1
1WS–13750–52	10 – 1
1WS–13761–00	10 – 3
1WS–13898–00	7 – 5
BW3–13907–10	26 – 13
1WS–13938–10	10 – 10
BW3–13971–01	26 – 19
2C0–14105–00	10 – 16
8A7–14139–00	10 – 22
5PS–14147–00	10 – 4
895–14169–00	10 – 21
8CC–14216–10	10 – 14
54P–14243–00	10 – 9
1WS–14335–00	10 – 7
BW3–14401–02	9 – 5
BW3–14437–01	9 – 11
1WS–1443E–00	9 – 14
1WS–14450–00	9 – 8
1WS–14452–00	9 – 9
1WS–14465–00	10 – 19
14B–14466–00	10 – 20
BW3–14468–01	9 – 12
BW3–14469–01	9 – 6
BW3–1446C–01	9 – 7
8HG–14534–00	10 – 13
BEH–14610–10	11 – 1
3YF–14613–01	11 – 6
5S7–14715–00	11 – 13
B71–14755–00	11 – 12
4BD–14766–00	11 – 5
	11 – 20

PART NO.	REF. NO.
BW3–14779–00	11 – 26
1WS–15100–08	12 – 1
1WS–15128–00	12 – 24
5EB–15155–00	12 – 2
1WS–15156–00	12 – 14
1WS–15189–00	12 – 10
36Y–15189–00	12 – 8
2H7–15361–00	12 – 7
3F9–15362–10	13 – 17
1WS–15377–00	13 – 11
3P6–15399–00	48 – 16
1WS–15411–00	13 – 1
1WS–15416–00	12 – 21
BMB–15418–00	13 – 10
1WS–15421–00	5 – 26
1WS–15441–00	13 – 15
1WS–15451–00	13 – 6
1WS–15456–01	12 – 22
1WS–15461–00	15 – 22
1WS–15484–00	40 – 5
B5Y–1548B–00	13 – 22
BW3–15499–00	13 – 19
1WS–15512–00	14 – 5
1WS–15515–00	14 – 1
23P–15521–00	14 – 4
1WS–15560–00	14 – 6
1WS–15590–00	14 – 2
1WS–16150–00	15 – 1
363–16154–00	15 – 2
	15 – 13
1WS–16181–00	15 – 11
5TG–16321–00	15 – 6
5VY–16321–00	15 – 4
5VY–16325–10	15 – 5
1WS–16340–00	15 – 18
132–16346–00	18 – 2
1WS–16350–00	15 – 7
1WS–16356–00	15 – 17
1WS–16371–01	15 – 3
2D1–16382–00	5 – 27
1WS–17121–00	16 – 13
1WS–17131–00	16 – 6
1WS–17151–00	16 – 2
BAT–17161–00	16 – 9
1WS–17211–00	16 – 38
1WS–17221–00	16 – 22
1WS–17231–00	16 – 33
1WS–17241–00	16 – 29

PART NO.	REF. NO.
BAT–17251–00	16 – 37
BAT–17261–00	16 – 26
1WS–17401–00	16 – 1
1WS–17421–00	16 – 17
1WS–17446–00	16 – 15
BW3–17460–00	31 – 29
1WS–18101–00	18 – 4
BW3–18110–10	35 – 24
1WS–18112–00	18 – 14
1WS–18113–00	35 – 25
BW3–18115–00	35 – 13
5VX–18116–00	35 – 16
1D7–18127–00	18 – 3
1WS–18140–00	18 – 7
5VX–18154–00	35 – 17
2C0–18175–00	18 – 6
1WS–18511–00	17 – 4
1WS–18512–00	17 – 5
1WS–18513–00	17 – 6
20S–18535–00	17 – 7
1WS–18536–00	17 – 8
1WS–18540–00	17 – 1
3D7–18542–00	17 – 2
BW3–21102–00	19 – 15
BW3–21103–00	19 – 16
BAU–21110–00	19 – 1
BMB–2117E–00	45 – 1
BAU–2117G–00	19 – 40
BAU–2117G–10	19 – 41
23P–2117K–01	28 – 17
BW3–21288–10	19 – 26
BW3–21315–00	19 – 11
BW3–21316–00	19 – 12
BW3–21343–00	6 – 3
BMB–2142L–00	19 – 17
BMB–2142M–00	19 – 18
BW3–21445–00	11 – 8
3D7–21447–00	35 – 7
	36 – 7
5PS–2144G–00	37 – 2
BMB–21471–00	19 – 21
BMB–21494–00	19 – 20
BMB–21495–00	19 – 9
BMB–21511–00–P0	20 – 1
1XC–21568–01	27 – 49
3FY–21575–01	26 – 29
BMB–21613–00	20 – 42
BW3–21617–20	20 – 35

PART NO.	REF. NO.
BMB–21629–00	20 – 11
BMB–2162A–00	21 – 10
BMB–2163A–00	20 – 25
5SL–21649–00	27 – 2
	27 – 13
BHL–21668–00	20 – 47
BW3–21671–00	20 – 43
BMB–21685–00	20 – 20
BMB–21711–00	21 – 1
2N4–21717–00	45 – 2
5UM–21717–E0	26 – 22
BMB–21721–00	21 – 5
BMB–2172W–00	6 – 33
BMB–21731–00–P0	21 – 9
BMB–2173E–00	21 – 17
BMB–2173F–00	21 – 18
17D–21749–00	20 – 9
1XB–2175T–00	37 – 28
BAU–2175U–00	37 – 31
26H–21828–00	6 – 20
BMB–21871–00	6 – 19
BW3–21873–00	6 – 29
2C0–21875–00	6 – 22
BW3–22110–01	22 – 1
BMB–22131–00	22 – 15
4FN–22141–00	31 – 26
BW3–22141–00	22 – 11
BMB–2216A–00	22 – 23
30X–22178–00	19 – 28
	35 – 18
BW3–2217A–01	22 – 26
BW3–2217M–00	22 – 32
10V–22184–00	19 – 29
	35 – 19
30X–2219X–00	22 – 10
BW3–22210–02	23 – 1
BMB–22311–00	22 – 16
BW3–22417–00	22 – 6
1C3–22969–10	22 – 17
BW3–23102–02	25 – 23
BW3–23103–02	25 – 1
BW3–23110–01	25 – 25
BW3–23111–01	25 – 19
	25 – 41
276–23114–01	25 – 13
	25 – 35
BW3–23117–00	25 – 18
	25 – 40

PART NO.	REF. NO.
23P–23117–01	25 – 15
	25 – 37
BW3–23120–01	25 – 3
4KM–23123–01	25 – 47
2CR–23125–00	25 – 9
	25 – 31
BW3–23126–00	25 – 2
	25 – 24
3JD–2312G–L0	25 – 43
3JD–2312G–L1	25 – 22
BW3–23141–00	25 – 17
	25 – 39
4PU–23144–00	25 – 5
	25 – 27
4PU–23145–01	25 – 7
	25 – 29
4V4–23146–L0	25 – 8
	25 – 30
3XJ–23147–L1	25 – 20
	25 – 42
4DA–23147–L1	25 – 12
	25 – 34
4V4–23153–L0	25 – 6
	25 – 28
2HH–23158–L0	25 – 14
	25 – 36
BMB–2315H–00	20 – 6
BMB–2315J–00	20 – 7
BW3–23170–01	25 – 10
	25 – 32
5EB–23171–00	25 – 4
	25 – 26
BW3–2317E–10	24 – 21
BW3–2317F–10	24 – 22
BW3–2330H–01	25 – 11
	25 – 33
BW3–23318–00	24 – 6
BW3–23340–00	25 – 44
BAU–2334G–00	24 – 8
BW3–2334H–10	24 – 23
3XJ–23357–L0	25 – 16
	25 – 38
1RC–23393–00	24 – 14
1W1–23416–00	24 – 2
3YF–23418–00	24 – 5
BW3–24105–01	26 – 8
BW3–24110–02–P1	26 – 1
BW3–2411G–00	26 – 21

PART NO.	REF. NO.
BW3–2411G–00	27 – 3
	27 – 14
BMB–24129–00–P0	27 – 1
BW3–2412Y–00	26 – 2
BAU–24135–00	9 – 27
BMB–24139–00–P0	27 – 12
1RC–2413B–01	39 – 11
	39 – 12
3HA–24141–00	19 – 42
	20 – 36
BEH–24141–00	26 – 30
BW3–24141–00	26 – 28
BEH–24141–10	26 – 31
BAU–2414G–00	20 – 2
5PX–24180–00	9 – 26
3TB–24181–00	26 – 20
BW3–24181–00	26 – 3
2RC–24182–00	9 – 37
BW3–24182–00	26 – 4
BW3–24184–00	26 – 24
BW3–24186–00	26 – 5
5VN–24188–00	38 – 1
31A–24188–01	19 – 37
	48 – 26
BMB–241B1–00–P0	27 – 23
BW3–24321–00	9 – 24
2RC–24322–00	9 – 28
BW3–24324–00	9 – 38
BEH–243A1–00	9 – 29
BEH–243A2–00	9 – 30
1RC–24486–00	26 – 16
BW3–24491–00	26 – 15
BW3–24595–00	26 – 26
BW3–24595–10	26 – 27
BW3–24602–00	26 – 18
2D1–24785–00	19 – 38
BVW–2478E–00	28 – 14
BAU–2479K–00	28 – 12
BW3–25111–00	29 – 1
BW3–25117–00	29 – 2
BMB–2517A–00	49 – 6
BW3–25181–00	29 – 12
BAU–25183–00	29 – 11
BW3–2518A–01	32 – 1
BW3–25311–00	31 – 1
BW3–25317–00	31 – 2
5SL–25364–00	31 – 14
5JJ–25366–00	31 – 6

PART NO.	REF. NO.
1RC–2537W–01	31 – 13
1RC–25383–00	31 – 8
3SP–25388–00	31 – 22
1RC–25389–00	31 – 23
BAU–2538L–00	32 – 14
BW3–25398–00	29 – 7
	31 – 17
2D1–25807–00	34 – 2
2B0–2580A–00	34 – 1
1WS–2581T–01	30 – 3
2D1–2582A–00	37 – 6
BW3–2582W–01	32 – 4
4P5–2583V–00	37 – 4
BW3–2584D–02	37 – 22
BW3–2584E–02	37 – 23
5SL–25852–00	37 – 17
5VS–25852–00	34 – 3
20S–25854–00	34 – 5
5SL–25854–00	37 – 15
5SL–25855–00	37 – 16
5VS–25855–00	34 – 4
4BP–2585F–01	37 – 7
5VS–25867–00	34 – 11
BW3–25872–01	34 – 14
BW3–25873–11	34 – 15
BW3–25874–01	34 – 16
BW3–25876–10	34 – 21
BW3–25886–10	22 – 21
BW3–2588F–00	37 – 26
2D1–25894–00	37 – 14
BW3–25895–00	37 – 18
5VS–2589F–00	34 – 7
5VS–2589H–00	34 – 6
5PS–26133–20	33 – 26
	33 – 28
BMB–26141–00	33 – 19
BMB–26142–00	33 – 22
BMB–26223–00	33 – 20
BMB–2622A–00	33 – 23
BNW–26246–00	33 – 4
39P–2627E–00	33 – 9
BHL–26280–00	33 – 25
BVW–26281–00	33 – 11
BVW–26282–00	33 – 12
BHL–26290–00	33 – 27
5VS–26332–00	34 – 10
BW3–27200–01	36 – 9
BMB–27213–00	36 – 10

PART NO.	REF. NO.
5EL–27216–00	36 – 12
4BP–27222–02	37 – 8
BW3–27311–00	35 – 26
BW3–27316–00	35 – 28
BW3–27321–00	35 – 27
36Y–27424–01	11 – 25
B7N–27431–00	35 – 41
4BP–27434–01	35 – 9
5VX–27437–00	35 – 45
	36 – 19
B7N–27441–00	36 – 15
BMB–27453–00	35 – 33
23P–28164–00	28 – 19
4KG–28186–11	28 – 21
BMB–28229–00	27 – 33
BMB–28239–00	27 – 41
BMB–2831T–00	38 – 26
BW3–2831V–10	38 – 2
BW3–28336–00	38 – 3
BC3–28349–00	20 – 34
BMB–2835U–00–P0	39 – 1
BMB–2835V–00–P0	39 – 6
BMB–2836K–01	38 – 12
BMB–2836L–00	38 – 19
BMB–28381–00	38 – 29
BMB–28391–00	39 – 13
BMB–28392–00	39 – 14
BMB–283M3–00	38 – 33
BMB–283M4–00	38 – 37
BEH–81315–00	48 – 15
1WS–81410–00	40 – 1
BAT–81450–00	40 – 2
18P–81801–00	41 – 6
BW3–81815–00	41 – 7
18P–81826–00	41 – 5
4XV–8182A–00	28 – 13
	41 – 4
	41 – 9
4B5–81844–00	41 – 2
1FK–81847–00	41 – 3
4B5–81871–00	41 – 8
1WS–81890–00	41 – 1
1WS–81916–00	47 – 16
1XC–81940–00	47 – 3
1TP–81950–00	47 – 21
5VK–81950–31	47 – 20
5EA–81952–00	47 – 22
1D7–81960–10	47 – 17

PART NO.	REF. NO.
3WP–81980–00	47 – 11
5TJ–82100–01	47 – 1
5SL–82113–01	48 – 4
5SL–82119–10	47 – 5
BMB–8212B–00	20 – 28
4BP–82131–00	47 – 2
1AE–82151–00	47 – 4
5JJ–82151–00	47 – 9
5JJ–82151–20	47 – 12
5JJ–82151–30	47 – 10
5JJ–82151–60	47 – 13
5JJ–82151–80	47 – 8
1WS–82310–00	48 – 8
1WS–82380–00	48 – 6
1WS–82504–01	48 – 14
BW3–82511–09	48 – 5
BW3–82530–01	37 – 1
1WS–82540–00	48 – 9
BEH–8255P–01	48 – 3
BW3–82566–00	35 – 31
5PS–82576–01	47 – 23
BNW–82590–00	47 – 7
1B3–82911–00	46 – 1
3YX–82917–01	46 – 8
BVW–8330C–00	42 – 3
BVW–8330C–10	42 – 4
BAT–83310–00	42 – 1
BAT–83320–00	42 – 2
1WS–83371–00	48 – 39
BNW–83500–00	43 – 1
5PS–83513–00	43 – 4
BAG–8358J–01	48 – 37
4P9–83591–00	48 – 12
5EB–83912–03	46 – 2
5JJ–83913–00	46 – 11
BNW–83922–00	34 – 9
4XV–83929–00	46 – 7
2C0–83945–00	46 – 3
5LV–83951–00	46 – 6
BAG–83963–02	46 – 14
BNW–83969–00	46 – 12
1HP–83980–03	34 – 12
1TP–84347–00	45 – 14
5SL–84753–00	27 – 31
8GM–85110–00	25 – 48
3Y6–85130–02	45 – 11
BW3–85752–10	26 – 14
1WS–85801–01	10 – 5

PART NO.	REF. NO.
3B4–85885–01	10 – 15
5YU–85886–00	48 – 32
BNW–8591A–50	48 – 2
2CR–8592A–20	11 – 2
BAG–85930–09	49 – 1
BW3–85970–02	49 – 5
BW3–85980–01	49 – 11
BMB–85991–00	49 – 15
BG4–86120–00	9 – 33
BMB–88195–00	48 – 22
BW3–E2577–00	5 – 10
54P–E416A–00	10 – 6
BEH–E460B–00	11 – 3
BEH–E4711–01	11 – 11
BW3–E471C–00	11 – 16
BW3–E472C–00	11 – 18
BW3–E4738–00	11 – 19
BW3–E4799–00	11 – 15
BU3–E7131–00	16 – 6
B4T–E7251–00	16 – 37
B4T–E7261–00	16 – 26
BW3–F1399–10	19 – 25
BW3–F1642–00	20 – 40
BW3–F1669–01	20 – 19
BNW–F177G–00	20 – 29
BW3–F2151–00	22 – 14
BNW–F2313–00	22 – 18
BW3–F3441–00	24 – 19
BW3–F3442–10	24 – 15
BW3–F414G–00	27 – 27
BW3–F414J–00	27 – 37
BW3–F414K–00	27 – 45
BW3–F4170–00	9 – 36
BW3–F470F–00	28 – 2
BW3–F470H–00	28 – 10
BW3–F4710–00	28 – 1
1SD–F4723–00	28 – 3
	28 – 9
BW3–F4750–00	28 – 8
1WD–F4780–00	28 – 11
BW3–F4796–00	28 – 16
11D–F483H–00	28 – 6
BW3–F5104–00	29 – 6
BW3–F517G–00	30 – 1
	32 – 2
BW3–F5304–00	31 – 15
BW3–F5446–00	31 – 10
BW3–F5802–00	30 – 12

PART NO.	REF. NO.
BW3–F5802–00	30 – 20
BW3–F5802–10	32 – 13
BW3–F5805–00	30 – 6
	30 – 14
BW3–F5806–00	32 – 7
BNW–F580T–00	30 – 5
BNW–F580U–00	30 – 13
BW3–F580W–01	32 – 6
56P–F5824–00	30 – 8
	30 – 16
	32 – 9
4CU–F5825–00	30 – 9
	30 – 17
	32 – 10
5DS–F5917–00	30 – 11
	30 – 19
	32 – 12
5DS–F5919–00	30 – 10
	30 – 18
5VK–F5919–20	32 – 11
5D7–F5924–10	30 – 7
	30 – 15
5VK–F5924–10	32 – 8
BNW–F6111–01	33 – 1
BEH–F6240–00	33 – 3
BEH–F6241–00	33 – 2
BW3–F6301–00	33 – 8
BW3–F6335–00	33 – 18
BW3–F7400–00	35 – 2
BW3–F7404–00	36 – 2
BW3–F7413–00	35 – 3
	36 – 3
BNW–F741L–00	35 – 42
BNW–F742L–00	36 – 16
BW3–F7442–00	35 – 1
BW3–F7443–00	36 – 1
BAG–F8100–00	28 – 20
BAG–F815P–00	20 – 48
BAG–F8321–00	38 – 5
BAG–F834L–00	43 – 5
B0J–H21E0–01	48 – 36
BW3–H2309–00	48 – 20
BAG–H4300–00	44 – 1
BW3–H4700–00	45 – 5
BEE–H4740–00	45 – 13
B34–H5546–00	48 – 19
BAG–H5546–00	49 – 21
B6Y–H5810–10	49 – 20

PART NO.	REF. NO.
BAG–H6016–00	43 – 8
BVW–W000B–00	24 – 24
BHL–W001A–00	31 – 32
1WS–W001G–10	15 – 23
B4C–W001M–00	15 – 24
BAU–W003B–00	25 – 51
5VX–W0042–51	37 – 5
1WS–W1218–10	4 – 5
BW3–W2343–00	24 – 10
2TV–W2470–00	28 – 15
BVW–W8250–50	48 – 1
90101–06043	12 – 11
90101–08006	22 – 42
90101–10659	23 – 4
90101–12058	22 – 30
90101–12059	22 – 36
90102–12080	23 – 2
90105–05024	1 – 19
90105–06027	1 – 5
90105–06064	19 – 22
90105–06080	20 – 32
90105–06148	47 – 19
90105–06170	20 – 8
90105–07006	4 – 3
	4 – 7
90105–08063	35 – 38
	36 – 25
90105–08134	24 – 12
	25 – 21
	25 – 46
90105–08164	11 – 9
90105–08274	19 – 19
90105–10219	19 – 2
90105–10292	36 – 14
90105–10349	19 – 3
90105–10445	2 – 21
90105–10485	35 – 36
90105–10778	30 – 21
90105–12092	19 – 6
90105–12104	19 – 8
90105–126A8	2 – 11
90109–06100	12 – 19
90109–06293	1 – 10
90109–06295	4 – 19
90109–06320	6 – 14
90109–06328	30 – 4
90109–066F0	1 – 21
90109–08045	32 – 5

PART NO.	REF. NO.
90109–08195	48 – 21
90109–10069	35 – 29
90110–05067	48 – 11
90110–06049	13 – 21
90110–06081	1 – 13
90110–06110	38 – 28
90110–06152	5 – 8
90110–06168	7 – 6
90110–06173	7 – 11
90110–06177	40 – 3
90110–06274	5 – 41
90110–06340	20 – 46
90110–06341	6 – 31
90110–06388	13 – 8
	13 – 14
90110–06389	13 – 9
	13 – 16
90110–06395	12 – 23
90110–06396	4 – 16
	13 – 12
90110–06398	43 – 7
90110–08111	19 – 14
90110–10012	19 – 13
90110–12011	35 – 34
90111–05002	21 – 11
90111–05011	27 – 7
	27 – 18
	27 – 28
90111–05014	22 – 19
	27 – 10
	27 – 21
90111–05017	38 – 30
	38 – 34
	38 – 38
90111–05039	27 – 40
	27 – 48
90111–06038	38 – 14
	38 – 21
90111–06051	26 – 11
	49 – 4
90111–06060	11 – 17
90111–06068	6 – 28
90111–06098	35 – 39
90111–06151	27 – 9
	27 – 20
90111–06155	20 – 5
90111–06179	44 – 4
90111–06187	11 – 4

PART NO.	REF. NO.
90111–06864	19 – 27
	22 – 22
	22 – 25
	22 – 44
90111–10007	11 – 21
90116–08087	1 – 8
90116–10048	31 – 11
90119–05021	37 – 20
90119–06109	32 – 15
90119–06179	20 – 18
90119–06193	35 – 32
90119–06209	48 – 23
	49 – 16
90119–06263	15 – 10
90119–09014	12 – 12
90119–09018	12 – 13
90119–10056	1 – 12
90149–05030	30 – 2
	32 – 3
90149–05042	20 – 15
	20 – 21
	20 – 24
	20 – 26
	20 – 38
	20 – 44
	21 – 2
	21 – 6
	39 – 4
	39 – 9
	45 – 3
90149–05045	20 – 41
	21 – 3
	21 – 7
	33 – 21
	33 – 24
90149–06018	28 – 18
90149–06109	40 – 4
90149–06158	17 – 9
90149–06189	16 – 16
90149–08030	14 – 3
90149–10031	35 – 8
	36 – 8
90160–05013	9 – 10
90170–06026	35 – 14
90170–08010	37 – 9
90176–05004	25 – 49
90176–06008	9 – 34
	45 – 10

PART NO.	REF. NO.
90176–08009	38 – 4
	38 – 11
90176–10003	24 – 18
90179–05523	38 – 32
	38 – 36
	38 – 40
90179–06018	48 – 40
90179–08410	11 – 7
90179–10024	19 – 4
90179–20007	15 – 16
90179–22018	31 – 31
90179–25615	24 – 3
90183–04039	20 – 31
90183–05076	20 – 13
	20 – 16
	20 – 22
	20 – 23
	20 – 27
	20 – 39
	21 – 14
	27 – 25
	27 – 34
	27 – 42
	49 – 19
90183–050A6	38 – 15
	38 – 22
90183–05M02	43 – 9
90183–05X08	27 – 36
	27 – 44
90183–060A6	20 – 10
	20 – 33
	47 – 18
90183–062A1	38 – 16
	38 – 23
	43 – 10
90185–10011	31 – 12
90185–12119	22 – 38
90185–16002	22 – 13
90185–18009	31 – 27
90201–04030	47 – 25
90201–05027	25 – 50
90201–05032	43 – 3
90201–054K4	45 – 18
90201–06023	45 – 9
90201–06029	6 – 27
90201–06120	19 – 23
90201–064K6	9 – 20
90201–08053	35 – 12

PART NO.	REF. NO.
90201–08070	37 – 12
90201–086P8	33 – 6
90201–087H6	35 – 23
90201–10028	36 – 13
90201–10029	15 – 20
90201–10035	19 – 5
90201–10043	11 – 23
	24 – 17
90201–12008	2 – 12
90201–12051	35 – 11
90201–12068	35 – 35
90201–124G9	22 – 37
90201–12575	18 – 12
90201–13020	19 – 7
90201–16021	22 – 12
90201–177G4	18 – 8
90201–18013	31 – 28
90201–20008	16 – 40
90201–20030	15 – 14
90201–220T0	24 – 13
90201–256K6	24 – 11
90202–05004	38 – 31
	38 – 35
	38 – 39
90202–08006	21 – 13
	27 – 8
	27 – 19
	27 – 29
	39 – 5
	39 – 10
90202–26142	24 – 4
90206–12074	35 – 10
90208–20001	15 – 15
90208–22002	31 – 30
90209–21332	16 – 4
	16 – 8
90209–21351	16 – 12
90209–22352	16 – 11
90209–28008	16 – 24
	16 – 28
	16 – 35
90214–28002	16 – 32
90214–29002	16 – 31
90240–08005	37 – 11
90269–06008	27 – 35
	27 – 43
	48 – 29
90269–06019	21 – 15

PART NO.	REF. NO.
90269–07077	27 – 26
	27 – 30
90269–08010	6 – 15
	6 – 34
	20 – 14
90280–05029	2 – 10
90282–04036	2 – 20
90338–05009	38 – 6
	43 – 6
90338–06010	27 – 32
90338–06018	38 – 17
	38 – 18
	38 – 24
	38 – 25
90338–07043	6 – 13
90338–15803	19 – 24
90338–16262	12 – 5
90338–20008	22 – 2
90338–30007	22 – 5
90338–30008	22 – 4
90338–40004	22 – 3
90340–14132	8 – 6
90340–18002	1 – 6
90340–36005	13 – 2
90387–05042	45 – 16
90387–05068	27 – 11
	27 – 22
90387–05679	43 – 12
90387–06089	27 – 6
	27 – 17
90387–06130	9 – 35
90387–06136	26 – 10
90387–06142	38 – 13
	38 – 20
90387–06146	27 – 39
	27 – 47
90387–06150	45 – 8
90387–06221	49 – 8
90387–06236	6 – 25
90387–06255	21 – 12
	38 – 7
	38 – 27
90387–06265	20 – 3
90387–06300	9 – 18
	44 – 2
90387–06313	49 – 3
90387–06359	20 – 45
90387–06372	35 – 40

PART NO.	REF. NO.
90387–06372	48 – 25
	49 – 18
90387–06553	26 – 6
90387–07015	20 – 30
90387–07391	6 – 7
90387–07X09	28 – 5
90387–08073	20 – 17
90387–08089	33 – 5
90387–08115	38 – 9
90387–08120	19 – 30
	35 – 20
90387–1001B	48 – 24
	49 – 17
90387–10636	11 – 24
90387–124V0	22 – 29
90387–126Y1	22 – 35
90387–127W0	22 – 41
90387–14026	19 – 10
90387–16034	22 – 8
90387–20035	31 – 25
90387–20036	31 – 24
90387–21003	16 – 10
90387–25008	16 – 39
90387–250R3	16 – 3
90387–28004	16 – 30
	16 – 34
90387–30012	16 – 19
90387–31003	16 – 23
90401–10020	37 – 33
90401–10042	34 – 19
90401–10172	34 – 18
	37 – 35
90401–20009	8 – 3
90413–06031	10 – 17
90430–06014	5 – 5
90430–08143	13 – 5
90430–10004	48 – 13
90430–10005	34 – 20
	37 – 34
	37 – 36
90445–08X12	6 – 24
90445–08X13	6 – 21
90445–14M39	35 – 37
90450–35001	5 – 12
	6 – 18
90450–56011	9 – 2
	9 – 13
90450–56012	9 – 3

PART NO.	REF. NO.
90462–08102	12 – 20
90464–04001	37 – 25
90464–05188	49 – 10
90464–06008	6 – 35
90464–07014	37 – 24
90464–07M40	6 – 32
	19 – 36
90464–08012	34 – 24
	37 – 21
90464–09M31	9 – 31
90464–10233	34 – 26
	49 – 14
90464–10800	19 – 34
	19 – 35
	48 – 27
90464–12013	49 – 9
	49 – 13
90464–13073	48 – 31
90464–13185	20 – 12
90464–14010	48 – 28
90464–14013	22 – 24
	34 – 17
90464–16023	33 – 10
90464–17003	47 – 15
90464–18002	34 – 23
90464–18004	33 – 14
	37 – 30
90464–18246	19 – 33
90464–20816	33 – 15
90464–24230	48 – 33
90464–25160	39 – 2
	39 – 7
90464–26802	33 – 16
90464–30009	48 – 30
90464–30810	33 – 17
90464–48174	34 – 25
90464–65001	26 – 25
	48 – 34
90464–80002	48 – 35
90465–13M24	48 – 38
90467–08075	6 – 23
90467–090A2	9 – 25
	9 – 32
	9 – 39
	10 – 18
90467–120A3	37 – 19
90467–13083	9 – 15
90467–160A2	9 – 23

PART NO.	REF. NO.
90467–170A6	5 – 22
	5 – 24
90467–17128	9 – 22
90467–290A0	5 – 11
	5 – 13
	6 – 17
90480–01558	21 – 4
	21 – 8
90480–01559	6 – 30
90480–12023	45 – 17
90480–12072	20 – 4
90480–13010	7 – 9
90480–13035	27 – 5
	27 – 16
90480–13567	21 – 16
90480–14229	49 – 2
90480–14X03	28 – 4
90480–15001	9 – 16
	44 – 3
90480–15014	9 – 17
90480–15363	6 – 6
	6 – 12
90480–17213	27 – 38
	27 – 46
90480–18018	26 – 9
90480–18276	45 – 4
90480–18411	6 – 26
90501–06022	17 – 3
90501–12743	35 – 43
	36 – 17
90501–22721	2 – 17
90501–230E4	15 – 9
90506–18021	18 – 1
90508–18132	15 – 19
90508–20061	35 – 4
90508–20080	36 – 4
90508–29040	18 – 5
90520–02837	19 – 39
90520–04812	27 – 24
90520–05018	6 – 36
	27 – 4
	27 – 15
90520–05025	26 – 23
90520–07004	45 – 7
90520–10010	13 – 20
90520–15018	39 – 3
	39 – 8
90520–15019	38 – 8

PART NO.	REF. NO.
90520–15020	45 – 6
90560–05001	22 – 20
91312–04025	47 – 24
91312–05010	26 – 17
91312–05020	48 – 7
91312–06016	48 – 18
91312–06025	41 – 10
91312–06030	8 – 9
91312–08040	35 – 48
	36 – 22
91314–06014	5 – 7
91314–08040	11 – 14
91317–03006	6 – 10
91317–05020	43 – 11
91317–06020	18 – 15
91317–08030	24 – 20
91380–06012	47 – 14
91401–20012	37 – 13
91401–25015	35 – 47
	36 – 21
91402–25015	35 – 6
	36 – 6
91702–08040	35 – 46
	36 – 20
91702–10045	35 – 5
	36 – 5
91808–16023	1 – 3
	1 – 4
92012–06025	28 – 7
92012–06040	37 – 29
92012–08025	33 – 7
92014–08025	37 – 10
92017–05010	43 – 2
92017–05035	33 – 13
92017–06012	24 – 7
	37 – 3
	37 – 32
92017–06014	34 – 22
92017–08012	13 – 4
92017–08050	38 – 10
92902–08600	35 – 49
	36 – 23
92902–10200	24 – 16
92907–08600	5 – 28
93102–12106	18 – 11
93102–15212	5 – 32
93102–28022	31 – 5
93102–40030	16 – 21

PART NO.	REF. NO.
93106–30045	29 – 4
93106–40013	31 – 9
93108–35004	22 – 9
93109–17071	22 – 28
	22 – 34
	22 – 40
93210–04092	12 – 3
93210–07540	12 – 15
93210–12790	12 – 6
93210–15414	36 – 11
93210–15566	48 – 17
93210–16325	12 – 9
93210–207A0	7 – 8
93210–21001	48 – 10
93210–235A1	5 – 2
	5 – 6
93210–27194	13 – 18
93210–33006	5 – 16
93210–357A3	13 – 3
93306–00006	14 – 8
93306–00106	5 – 34
	15 – 8
93306–00416	31 – 4
93306–00420	29 – 3
93306–20464	16 – 14
	16 – 41
93306–20480	31 – 3
93306–205B5	31 – 7
93306–20663	16 – 18
93310–232R9	15 – 12
93315–21570	5 – 31
93315–31758	22 – 27
93317–11096	5 – 30
	14 – 7
93317–11295	18 – 10
93317–21746	22 – 33
93317–22262	22 – 7
93317–31771	22 – 39
93332–00008	25 – 45
93332–00079	24 – 1
93440–25186	16 – 5
	16 – 7
93440–31187	16 – 25
	16 – 27
	16 – 36
93440–64199	16 – 20
93450–19052	2 – 9
93501–04011	1 – 7

PART NO.	REF. NO.
93501–04011	35 – 44
	36 – 18
93603–12007	5 – 40
93605–10090	2 – 18
94309–21800	29 – 10
94315–18X00	31 – 20
94418–21005	29 – 5
94440–18003	31 – 16
94581–79060	7 – 4
94582–56122	31 – 21
94591–61134	4 – 11
94701–00436	1 – 9
95022–06008	47 – 6
95022–06010	5 – 4
95024–10045	36 – 24
95027–06012	24 – 9
95027–06020	46 – 5
95302–08600	22 – 43
95314–06700	35 – 15
95602–05200	45 – 12
	45 – 15
95602–08200	19 – 32
	35 – 22
95602–10200	35 – 30
95604–10200	11 – 22
95607–06200	46 – 4
95607–10200	23 – 5
95607–12200	22 – 31
	23 – 3
95617–05100	43 – 13
95617–06100	34 – 8
95707–06500	37 – 27
95802–06016	49 – 12
95802–06025	6 – 8
95812–06020	5 – 17
95812–06025	26 – 7
	26 – 12
95812–06040	7 – 3
	12 – 17
95812–06060	12 – 18
95812–08065	12 – 16
95814–06020	11 – 10
95814–08045	19 – 31
95814–08050	35 – 21
95817–06020	5 – 20
95817–06025	9 – 19
95824–06030	49 – 7
95827–06012	20 – 37

PART NO.	REF. NO.
97602–04312	34 – 13
98502–06012	10 – 8
98507–04010	46 – 10
98507–05020	46 – 15
98507–05025	46 – 13
98704–03020	46 – 9
99001–07600	5 – 29
99002–10600	18 – 13
99009–10400	15 – 21
99009–12400	5 – 37
99009–15500	7 – 2
99009–17400	18 – 9
99530–08012	13 – 7
	13 – 13
99530–10014	12 – 4
99530–10114	1 – 15