YAMAHA

PARTS CATALOGUE

LLGS6

DNLGM1

LCM4

LNP125 (BES2) MALAYSIA

YAMAHA GENUINE Parts & Accessories

1YBES-440E1

( )

LNP125
PARTS CATALOGUE
©2023 by Yamaha Motor Co., Ltd.
1st edition, March 2023
All rights reserved.
Any reprinting or unauthorized use
without the written permission of
Yamaha Motor Co., Ltd.
is expressly prohibited.
Printed in Japan.

FOREWORD

This Parts Catalogue is related to the parts for the model(s) on the cover page. When you are ordering replacement parts, please refer to this Parts Catalogue and quote both part numbers and part names correctly.

1. Modifications or additions which have been made after the issue of the Parts Catalogue will be announced in the Parts News.
   It is advisable that you make the necessary corrections to the Parts Catalogue according to the Parts News.

2. Abbreviations
   The following abbreviations are used in this Parts Catalogue.

   "UR" Use specified parts number.

   "UN" Use as many as needed.

   "AP" Alternate Parts

   "LM" Locally Made (Parts need to be ordered locally)

   "F#" Frame No. (Applicable machine No.)

   "O/S" Over Size

3. The number of components for assembly
   - Parts, which are to be supplied in an assembly, are listed with a dot (.) in front of the part name as shown below.
   - The numeral appearing to the right of each component part indicates the quantity of parts for each assembly unit.

PART NO.	DESCRIPTION	Q'TY	REMARKS
2F5–83310–60	FRONT FLASHER LIGHT ASSY	2	
115–83311–60	.BULB (6V–18W)	1	

4. Applicable colours of graphics are represented in the "REMARKS" as shown below.

PART NO.	DESCRIPTION	Q'TY	REMARKS
2N4–24110–00–X5	FUEL TANK COMP.	2	MXR
3J1–24240–10	.GRAPHIC, FUEL TANK	1	FOR MXR

5. Note that the illustrations for reference in finding parts numbers are not to be used for assembling. When assembling, please use the applicable service manual.

6. The asterisk (*) before a reference number indicates modified items after the first edition.

7. Applicable Serial No.

Frame Serial No.

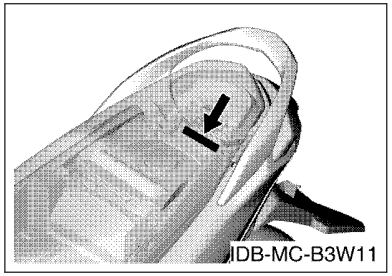
IDB-MC-B3W11

Engine Serial No.

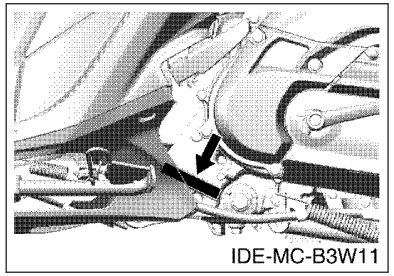
IDE-MC-B3W11

8. Applicable Colour Code (The (*) mark shows Model colour.)

Abbreviation	Colour Name	Colour Code
CIS	CIRCUIT SILVER	00WN
DNLGM1(*)	DARK GRAYISH LEAF GREEN ME 1	0699
LCM4(*)	LIGHT CYAN METALLIC 4	1056
LLGS6(*)	LIGHT LEAF GREEN SOLID 6	1510
MBM3	MAT BLUE METALLIC 3	0960
YB	YAMAHA BLACK	0033

9. Applicable Starting Serial No.

Frame Serial No.

Serial No.	Name Of Q'ty Column	Model Code

Engine Serial No.

Serial No.	Name Of Q'ty Column	Model Code

CONTENTS

ENGINE

CYLINDER.....1
CRANKSHAFT & PISTON.....2
VALVE.....3
CAMSHAFT & CHAIN.....4
OIL PUMP.....5
AIR SHROUD & FAN.....6
INTAKE.....7
EXHAUST.....9
CRANKCASE.....10
CRANKCASE COVER 1.....12
STARTER.....13
CLUTCH.....14
TRANSMISSION.....16

CHASSIS

FRAME.....17
FENDER.....18
SIDE COVER.....19
REAR SUSPENSION.....21
STEERING.....22
FUEL TANK.....24
SEAT.....25
FRONT WHEEL.....26
FRONT BRAKE CALIPER.....27
REAR WHEEL.....28
STEERING HANDLE & CABLE.....29
FRONT MASTER CYLINDER.....31
STAND & FOOTREST.....32
LEG SHIELD.....34
GENERATOR.....36
FLASHER LIGHT.....37
METER.....38
HEADLIGHT.....39
TAILLIGHT.....40
HANDLE SWITCH & LEVER.....41
ELECTRICAL 1.....42
ELECTRICAL 2.....43

INDEX

NUMERICAL INDEX.....44

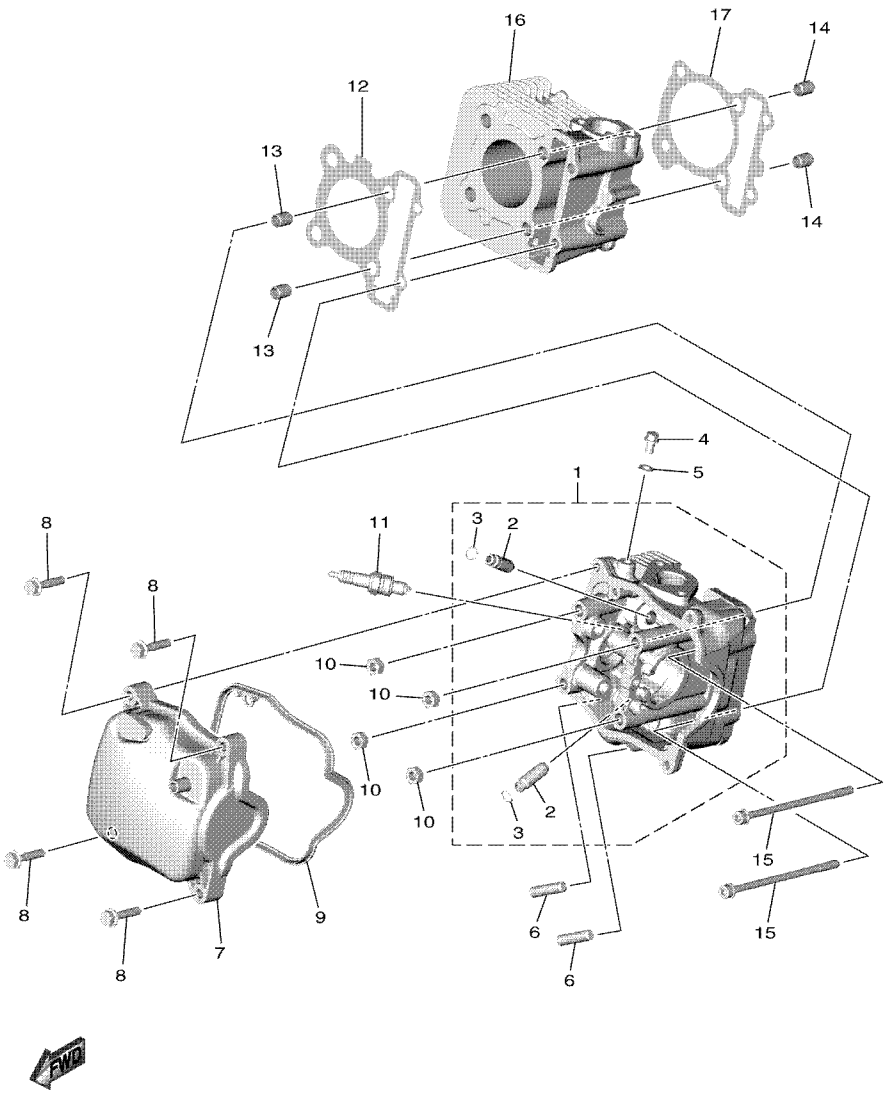

B3W1460DW010

FIG. 1 CYLINDER

REF. NO.	PART NO.	DESCRIPTION	BES2					REMARKS
1	BES–E1102–00	CYLINDER HEAD ASSY	1					
2	1DR–E1133–10	.GUIDE, VALVE 1	2					
3	93440–10153	.CIRCLIP	2					
4	95E32–06010	BOLT, FLANGE DEEP RECESS	1					
5	90430–06803	GASKET	1					
6	95612–08618	BOLT, STUD	2					
7	B5D–E1191–01	COVER, CYLINDER HEAD 1	1					
8	95D32–06030	BOLT, FLANGE DEEP RECESS	4					
9	B5D–E1193–00	GASKET, HEAD COVER 1	1					
10	90170–08810	NUT	4					
11	94700–00372	PLUG, SPARK (NGK CR6HSA)	1					
12	2TS–E1181–00	GASKET, CYLINDER HEAD 1	1					
13	99530–10114	PIN, DOWEL	2					
14	99530–10114	PIN, DOWEL	2					
15	90110–06868	BOLT, HEXAGON SOCKET HEAD	2					
16	2PH–E1311–10	CYLINDER 1	1					
17	B5D–E1351–00	GASKET, CYLINDER	1					

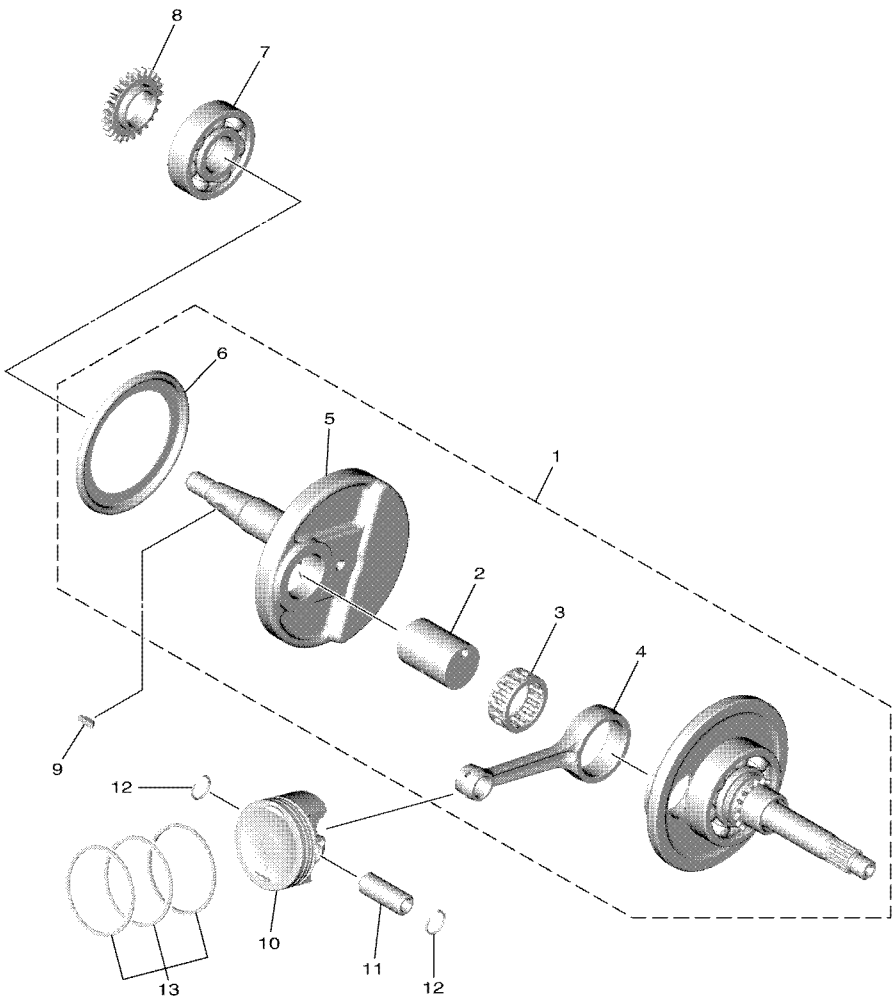

B3W1460DW020

FIG. 2 CRANKSHAFT & PISTON

REF. NO.	PART NO.	DESCRIPTION	BES2					REMARKS
1	BES–E1400–00	CRANKSHAFT ASSY	1					
2	2BM–E1681–10	.PIN, CRANK 1	1					
3	93310–528YP	.BEARING	1					
4	2PH–E1651–20	.ROD, CONNECTING	1					
5	B5D–E1422–00	.CRANK 2	1					
6	5LW–E3452–00	.COVER, ROTOR FILTER	1					
7	93306–372X7	BEARING	1					
8	B5D–E3324–00	GEAR, PUMP DRIVE	1					
9	90280–03017	KEY, WOODRUFF	1					
10	2PH–E1631–00	PISTON (STD)	1					
11	2PH–E1633–00	PIN, PISTON	1					
12	93450–14088	CIRCLIP	2					
13	2PH–E1603–10	PISTON RING SET (STD)	1					

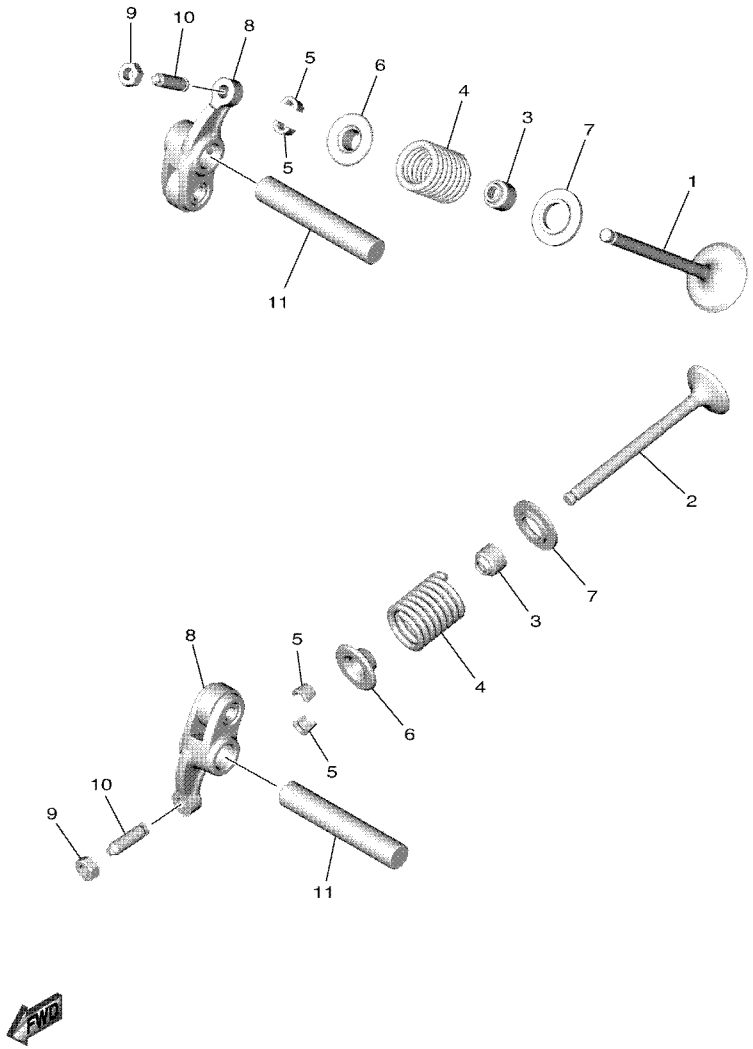

B3W1460DW030

FIG. 3 VALVE

REF. NO.	PART NO.	DESCRIPTION	BES2					REMARKS
1	2PH–E2111–00	VALVE, INTAKE	1					
2	B5D–E2121–00	VALVE, EXHAUST	1					
3	54P–E2119–00	SEAL, VALVE STEM	2					
4	B5D–E2113–10	SPRING, VALVE INNER	2					
5	5TL–E2118–00	LOCK, VALVE SPRING RETAINER	4					
6	2DP–E2117–00	RETAINER, VALVE SPRING	2					UR Either can use
	B63–E2117–01	RETAINER, VALVE SPRING	2					UR Either can use
7	50C–E2126–00	SEAT, VALVE SPRING 2	2					
8	2PH–E2151–02	ARM, VALVE ROCKER	2					
9	90170–05803	NUT	2					
10	33S–E2159–01	SCREW, VALVE ADJUSTING	2					
11	2PH–E2146–00	SHAFT, ROCKER	2					

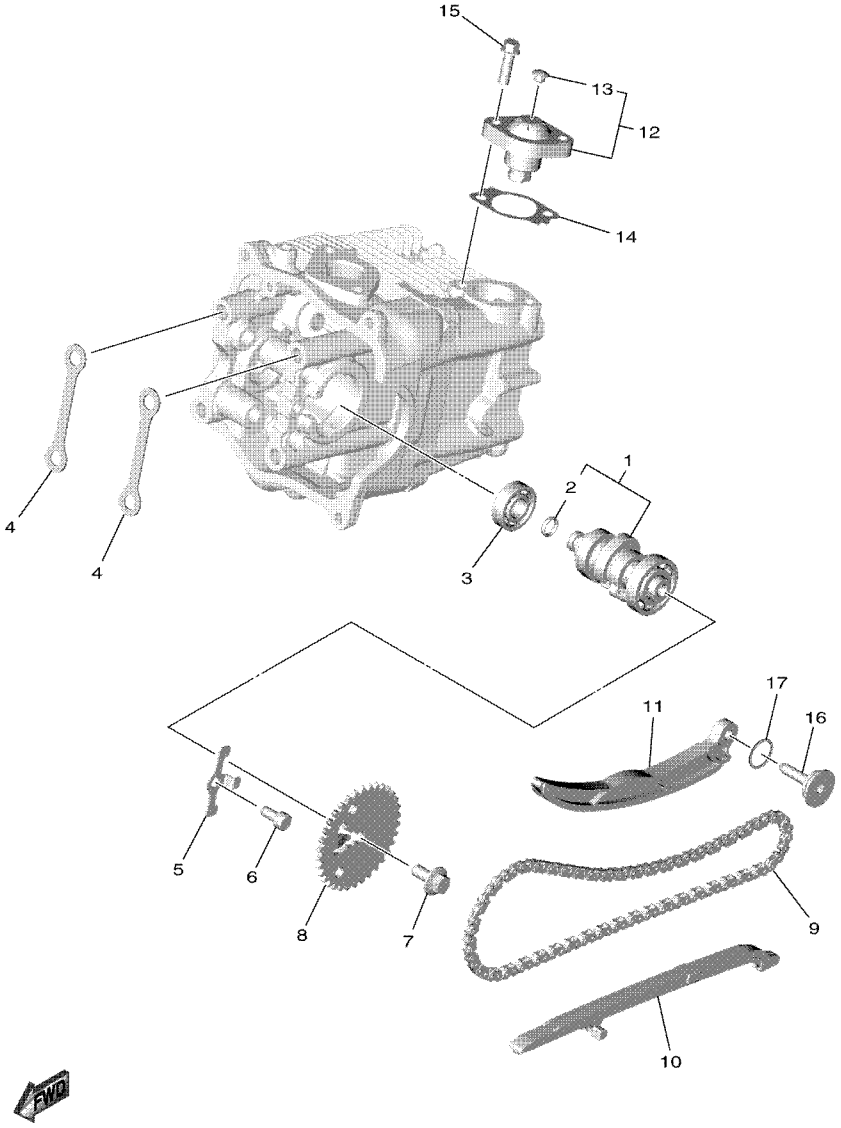

B3W1460DW040

FIG. 4 CAMSHAFT & CHAIN

REF. NO.	PART NO.	DESCRIPTION	BES2					REMARKS
1	BES–E2170–00	CAMSHAFT ASSY 1	1					
2	93210–09806	.O-RING	1					
3	93306–001YG	BEARING	1					
4	B7J–E111F–00	PLATE	2					
5	2PH–E112F–00	PLATE 2	1					
6	91312–06012	BOLT, HEXAGON SOCKET HEAD	1					
7	90105–07802	BOLT, FLANGE	1					
8	B5D–E2176–00	SPROCKET, CAM CHAIN	1					
9	94568–A6092	CHAIN	1					
10	54P–E2231–00	GUIDE, STOPPER 1	1					
11	B5D–E2241–00	GUIDE, STOPPER 2	1					
12	2PV–E2210–01	TENSIONER ASSY, CAM CHAIN	1					
13	5MX–E2222–00	.PLUG	1					
14	B5D–E2213–00	GASKET, TENSIONER CASE	1					
15	95E32–06020	BOLT, FLANGE DEEP RECESS	2					
16	B5D–E2157–00	BOLT	1					
17	93210–15862	O-RING	1					

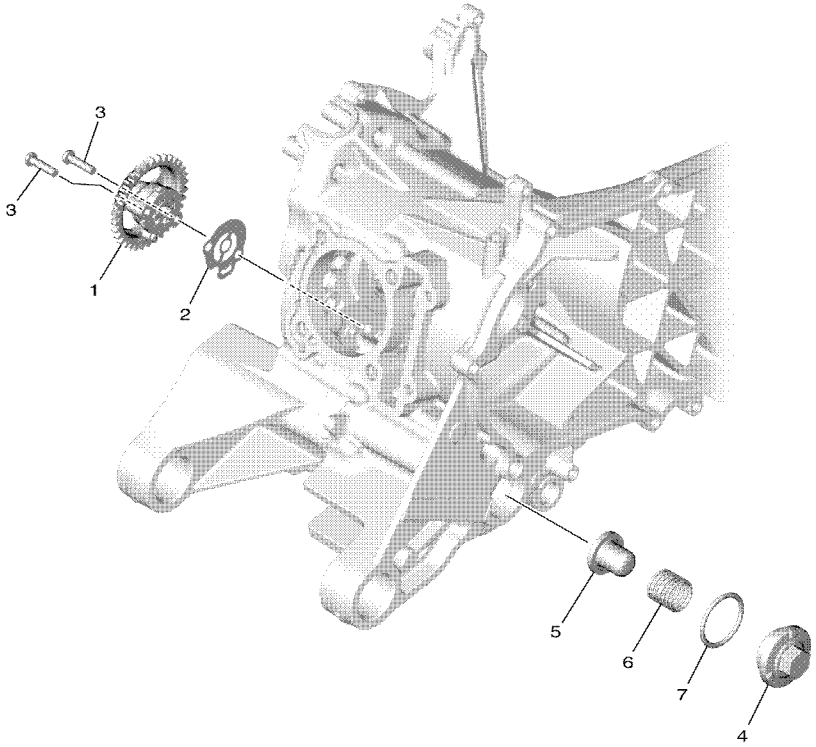

B3W1460DW050

FIG. 5 OIL PUMP

REF. NO.	PART NO.	DESCRIPTION	BES2					REMARKS
1	2PH–E3300–10	OIL PUMP ASSY	1					
2	BF4–E3475–00	GASKET	1					
3	98502–05020	SCREW, PAN HEAD	2					
4	54P–E5351–01	PLUG,DRAIN 1	1					
5	1GC–E3411–00	STRAINER, OIL	1					
6	90501–16004	SPRING, COMPRESSION	1					
7	93210–29800	O-RING	1					

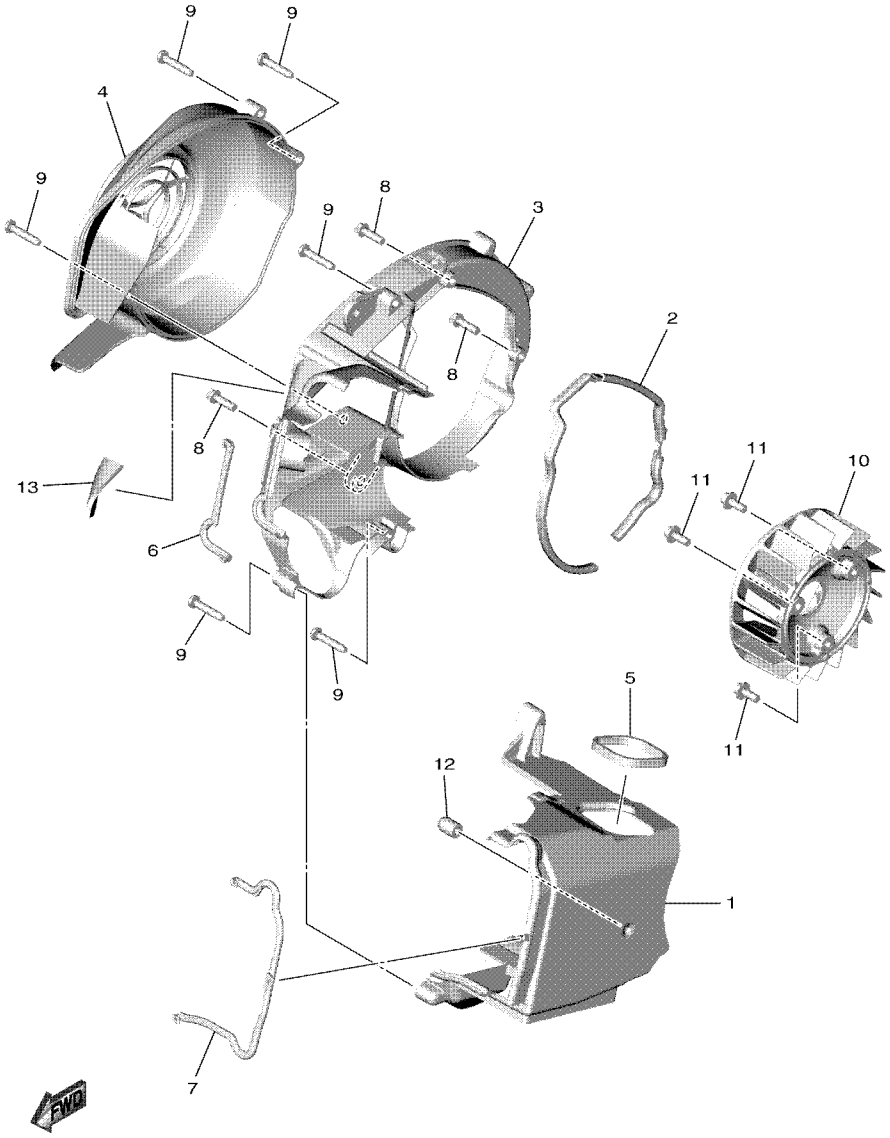

B3W1460DW060

FIG. 6 AIR SHROUD & FAN

REF. NO.	PART NO.	DESCRIPTION	BES2					REMARKS
1	B5D–E2651–00	AIR SHROUD, CYLINDER 1	1					
2	B5D–E2658–00	DAMPER, AIR SHROUD 1	1					
3	B5D–E2652–00	AIR SHROUD, CYLINDER 2	1					
4	B5D–E2653–01	AIR SHROUD, CYLINDER 3	1					
5	90520–05819	DAMPER, PLATE	1					
6	B5D–E2659–00	DAMPER, AIR SHROUD 2	1					
7	B5D–E2668–00	DAMPER, AIR SHROUD 3	1					
8	95E32–06020	BOLT, FLANGE DEEP RECESS	3					
9	97702–60530	SCREW, TAPPING	6					
10	2PH–E2611–10	FAN	1					
11	90110–06887	BOLT, HEXAGON SOCKET HEAD	3					
12	5LW–E3569–00	PLUG, BLIND	1					
13	90520–04812	DAMPER, PLATE	1					

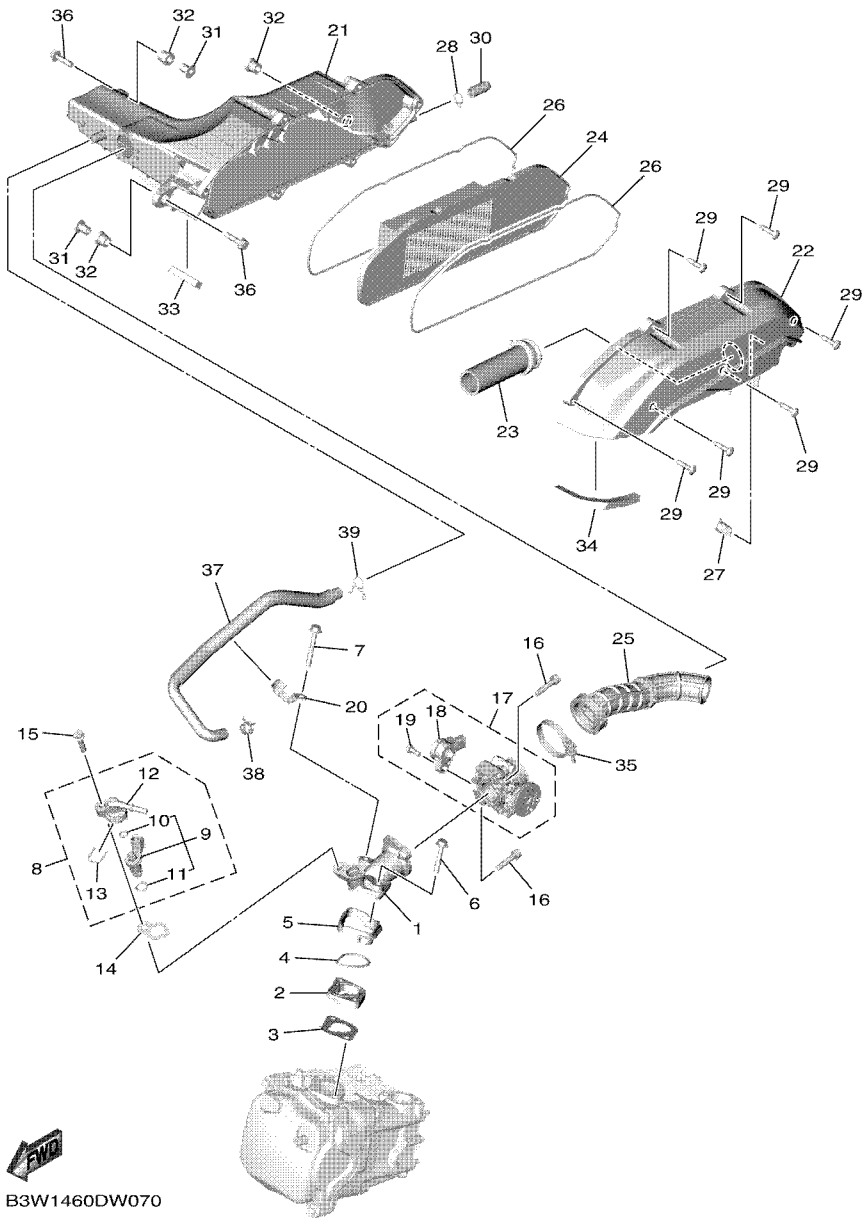

FIG. 7 INTAKE

REF. NO.	PART NO.	DESCRIPTION	BES2					REMARKS
1	2PH–E3585–10	MANIFOLD	1					
2	2PH–E3595–00	JOINT	1					
3	B5D–E3556–00	GASKET, MANIFOLD	1					
4	93210–35883	O-RING	1					
5	2PH–E3593–01	DAMPER	1					
6	95D32–06035	BOLT, FLANGE DEEP RECESS	1					
7	95D32–06045	BOLT, FLANGE DEEP RECESS	1					
8	2PH–E3770–10	INJECTOR ASSY	1					
9	2PH–E3761–10	.INJECTOR	1					
10	54P–E4147–00	..O-RING	1					
11	5CA–E4147–00	..O-RING	1					
12	54P–E3938–00	.PIPE	1					
13	54P–E4137–00	.CLIP	1					
14	B5D–E3557–00	GASKET	1					
15	95D32–06025	BOLT, FLANGE DEEP RECESS	1					
16	90110–06846	BOLT, HEXAGON SOCKET HEAD	2					
17	B5D–E3750–01	THROTTLE BODY ASSY	1					
18	B5D–H5885–01	.THROTTLE SENSOR ASSY	1					
19	1PM–14216–00	.SCREW	1					
20	2PH–E4146–00	PLATE	1					
21	B5D–E4411–00	CASE, AIR CLEANER 1	1					
22	B5D–E4412–00	CAP, CLEANER CASE 1	1					
23	2PH–E4437–00	DUCT	1					
24	B5D–E4450–00	ELEMENT ASSY, AIR CLEANER	1					
25	B5D–E4453–00	JOINT, AIR CLEANER 1	1					
26	B5D–E4452–10	SEAL	2					
27	B5D–E443G–00	PIPE, DRAIN 2	1					

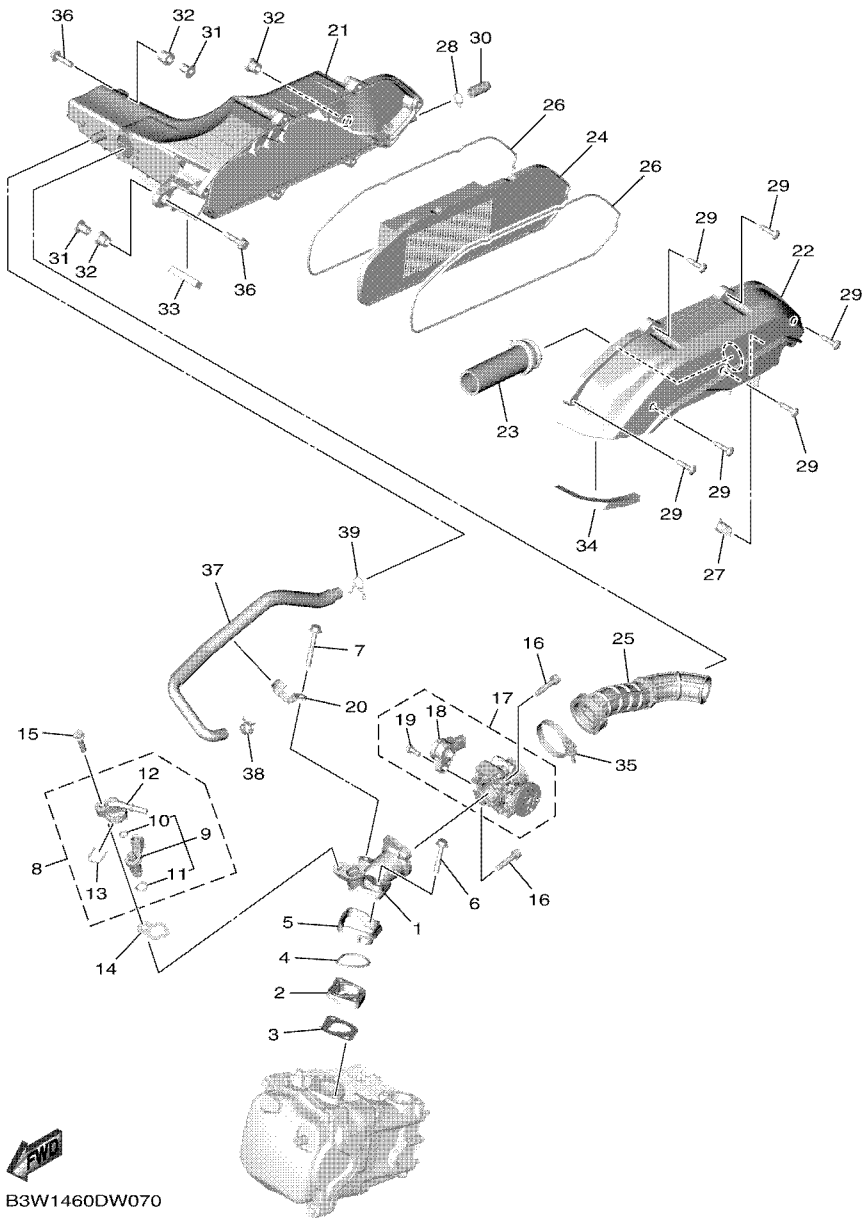

FIG. 7 INTAKE

REF. NO.	PART NO.	DESCRIPTION	BES2					REMARKS
28	90467–12807	CLIP	1					
29	97707–50025	SCREW, TAPPING	6					
30	5TL–E443E–00	PIPE, DRAIN	1					
31	90387–068T2	COLLAR	2					
32	90480–13013	GROMMET	3					
33	90520–10851	DAMPER, PLATE	1					
34	90520–10832	DAMPER, PLATE	1					
35	90450–46803	HOSE CLAMP ASSY	1					
36	95D32–06025	BOLT, FLANGE DEEP RECESS	2					
37	B5D–E1166–00	PIPE, BREATHER 1	1					
38	90467–13808	CLIP	1					
39	90467–13858	CLIP	1					

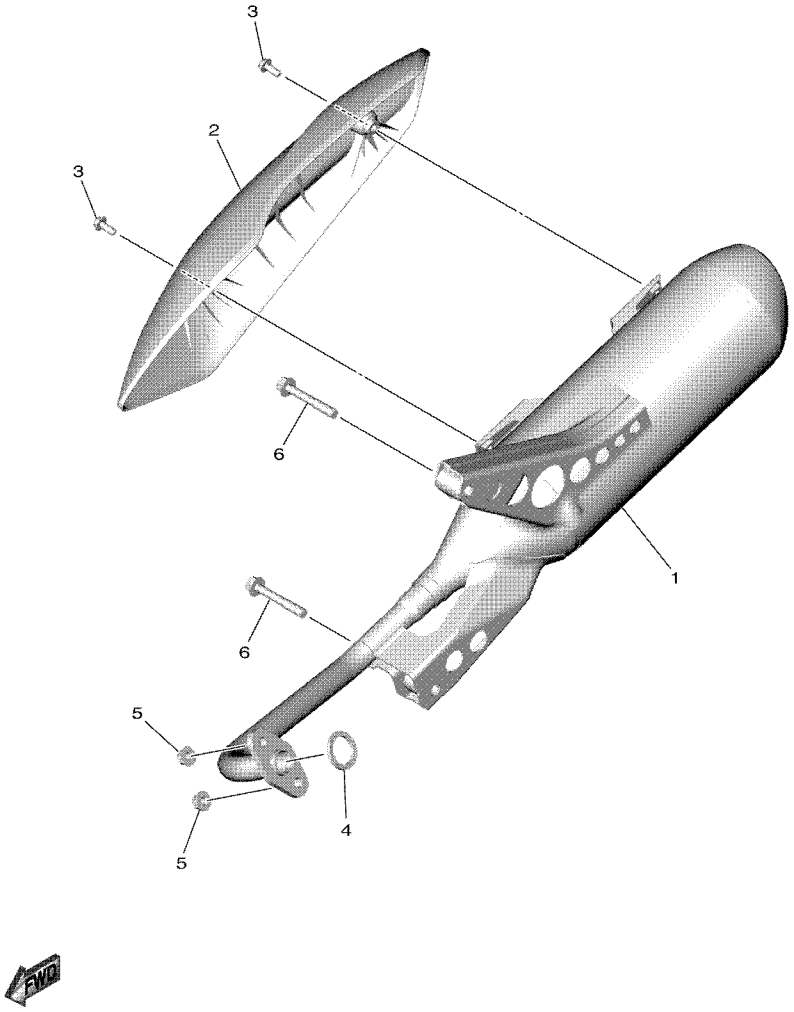

B3W1460DW080

FIG. 8 EXHAUST

REF. NO.	PART NO.	DESCRIPTION	BES2					REMARKS
1	BES–E4711–00	MUFFLER 1	1					
2	BES–E4718–00	PROTECTOR, MUFFLER 1	1					
3	90111–06811	BOLT, HEXAGON SOCKET BUTTON	2					
4	B92–E4613–00	GASKET, EXHAUST PIPE	1					
5	95702–08500	NUT, FLANGE	2					
6	95D32–08055	BOLT, FLANGE DEEP RECESS	2					

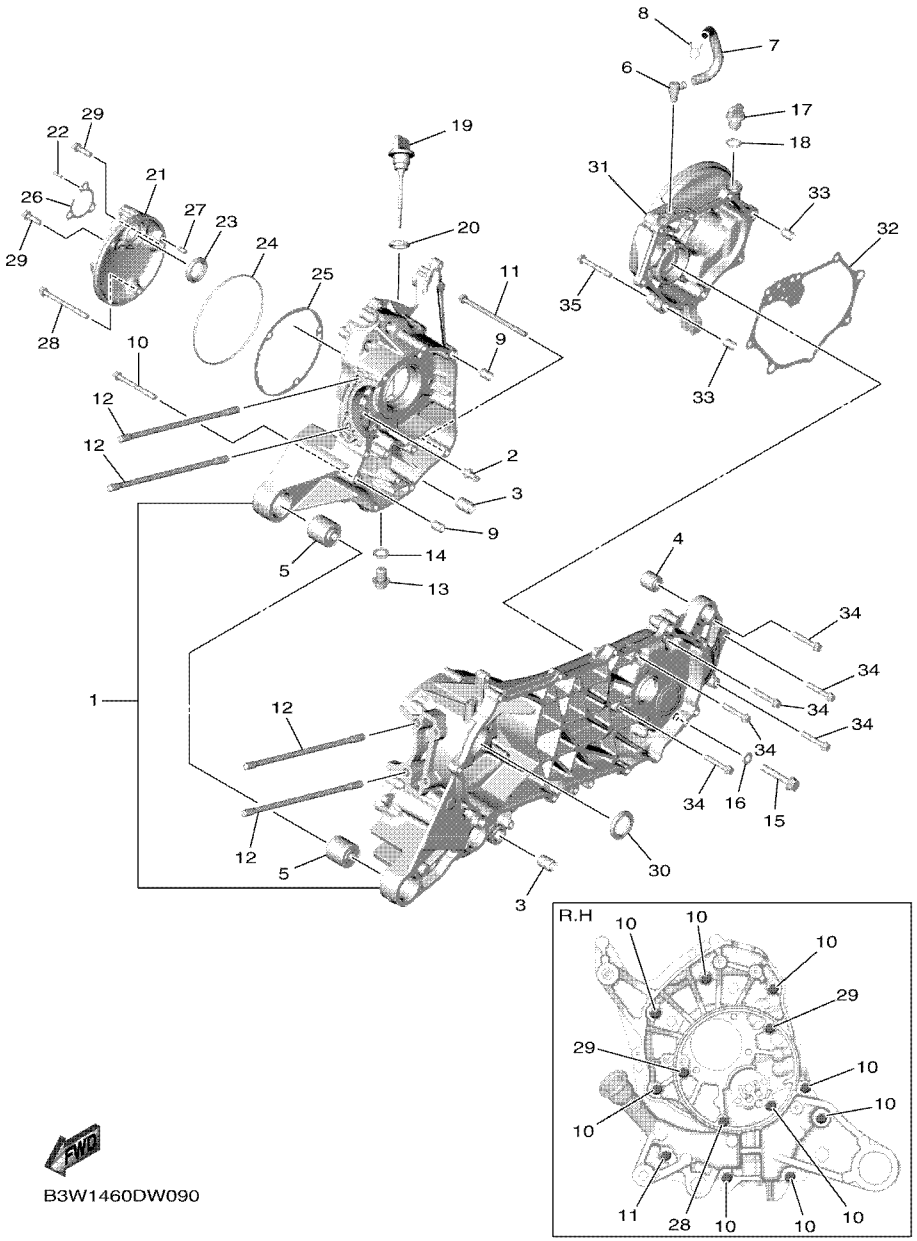

FIG. 9 CRANKCASE

REF. NO.	PART NO.	DESCRIPTION	BES2					REMARKS
1	BES–E5150–00	CRANKCASE ASSY	1					
2	2PH–E5155–01	NOZZLE 3	1					
3	1GC–F7121–00	BUSH	2					
4	90388–08803	DAMPER	1					
5	90388–10805	DAMPER	2					
6	54P–E5371–00	BREATHER	1					
7	2SX–E5373–00	PIPE, BREATHER	1					
8	90467–10008	CLIP	1					
9	99530–10114	PIN, DOWEL	2					
10	95E32–06060	BOLT, FLANGE DEEP RECESS	9					
11	95E32–06100	BOLT, FLANGE DEEP RECESS	1					
12	90116–08843	BOLT, STUD	4					
13	90340–12816	BOLT, STRAIGHT SCREW	1					
14	90430–12803	GASKET	1					
15	95812–08045	BOLT, FLANGE	1					
16	90430–08804	GASKET	1					
17	5LW–E5363–00	PLUG, OIL	1					
18	93210–148H8	O-RING	1					
19	B5D–E5362–00	PLUG, OIL LEVEL	1					
20	5LW–E3769–00	O-RING	1					
21	B5D–E5417–10	COVER, CAP	1					
22	99480–03012	PIN	1					
23	93102–21800	OIL SEAL	1					
24	93211–07800	O-RING	1					
25	B5D–E5453–00	GASKET	1					
26	B5D–E5463–10	GASKET, 2	1					
27	99480–05010	PIN	1					

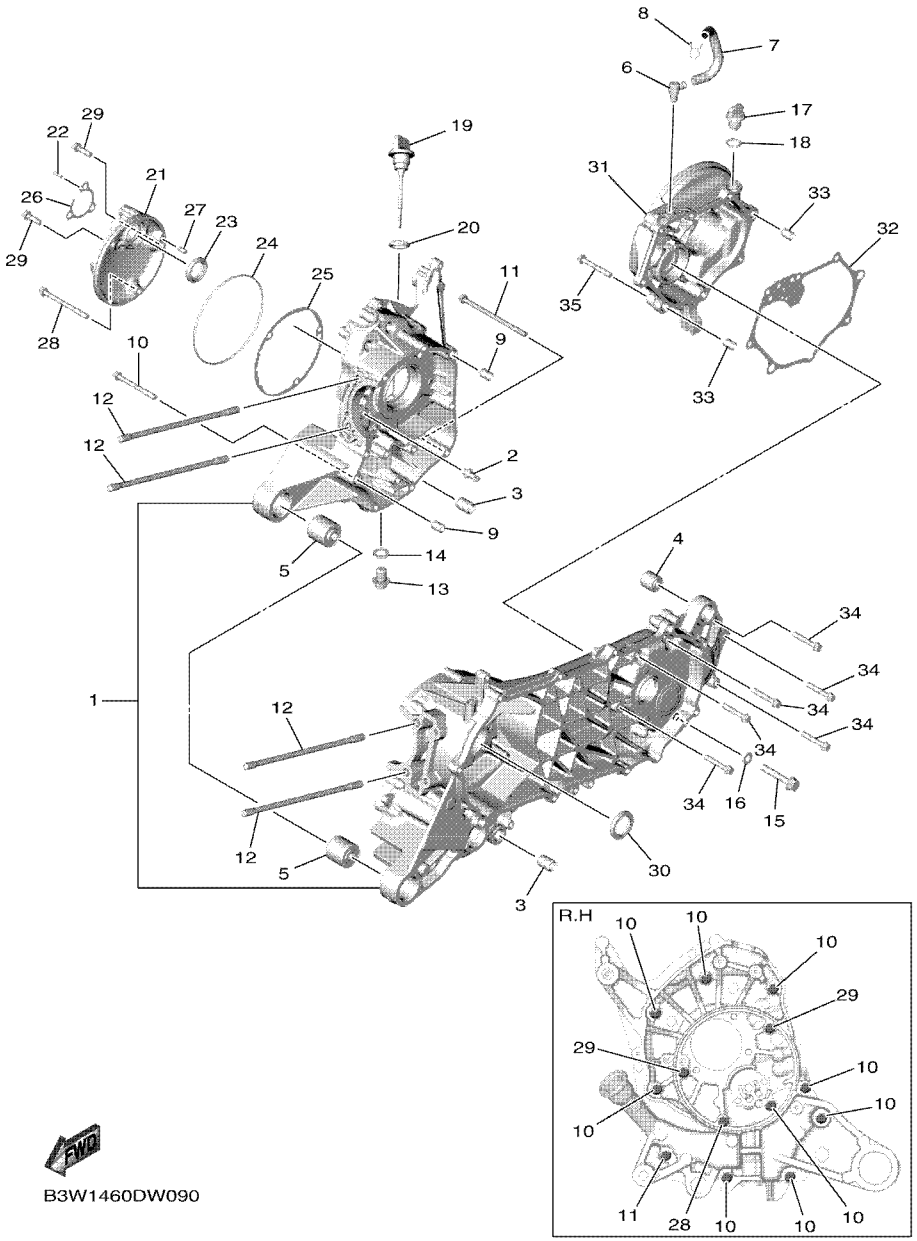

FIG. 9 CRANKCASE

REF. NO.	PART NO.	DESCRIPTION	BES2					REMARKS
28	95E32–06070	BOLT, FLANGE DEEP RECESS	1					
29	95E32–06020	BOLT, FLANGE DEEP RECESS	2					
30	93102–25824	OIL SEAL	1					
31	BES–E5421–00	COVER, CRANKCASE 2	1					UR Either can use
	B5D–E5421–01	COVER, CRANKCASE 2	1					UR Either can use
32	B5D–E5461–00	GASKET, CRANKCASE COVER 2	1					
33	99530–10114	PIN, DOWEL	2					
34	95E32–06035	BOLT, FLANGE DEEP RECESS	6					
35	95E32–06045	BOLT, FLANGE DEEP RECESS	1					

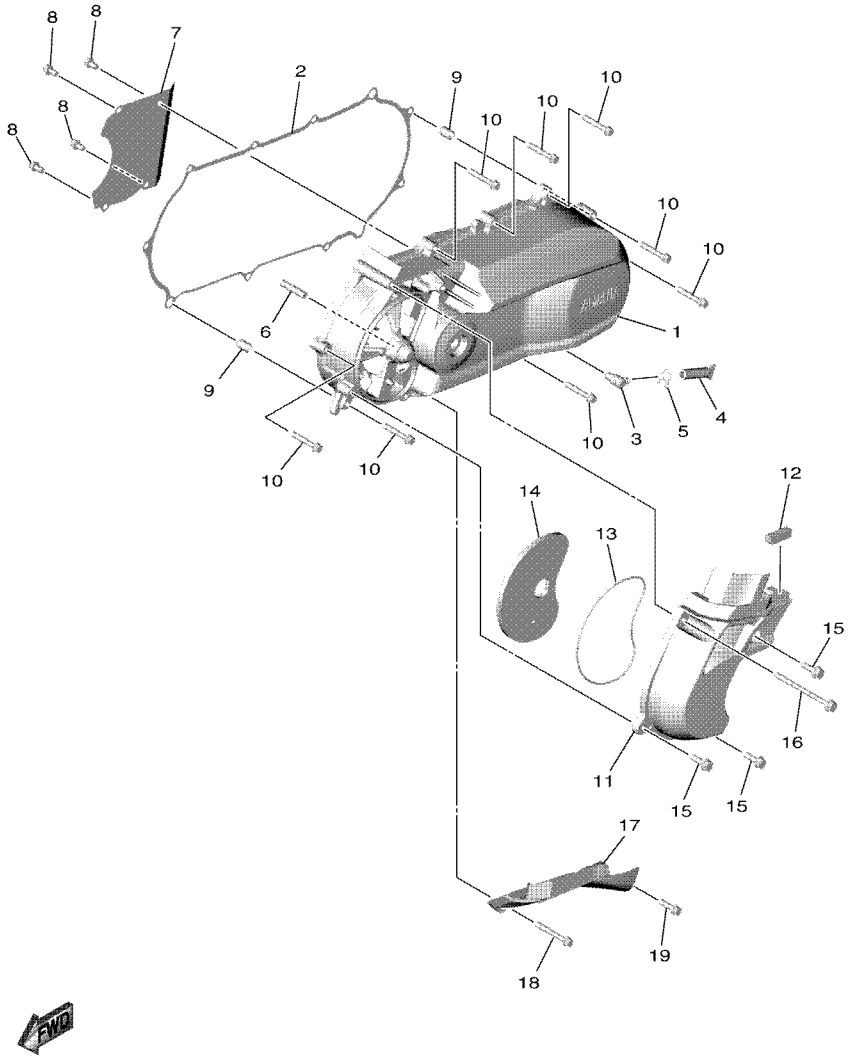

B3W1460DW100

FIG. 10 CRANKCASE COVER 1

REF. NO.	PART NO.	DESCRIPTION	BES2					REMARKS
1	BES–E5411–00	COVER, CRANKCASE 1	1					
2	B5D–E5451–00	GASKET, CRANKCASE COVER 1	1					
3	54P–E5371–00	BREATHER	1					
4	4ST–E443E–00	PIPE, DRAIN	1					
5	90467–110A3	CLIP	1					
6	B5D–E5659–00	SHAFT	1					
7	B5D–E5191–00	PLATE	1					
8	95E32–06010	BOLT, FLANGE DEEP RECESS	4					
9	99530–10114	PIN, DOWEL	2					
10	95E32–06035	BOLT, FLANGE DEEP RECESS	8					
11	B3W–E5471–00	DUCT, AIR	1					
12	90520–10834	DAMPER, PLATE	1					
13	B5D–E5472–00	SEAL, AIR DUCT	1					
14	2PH–E5407–00	ELEMENT 1	1					
15	95D32–06020	BOLT, FLANGE DEEP RECESS	3					
16	95D32–06080	BOLT, FLANGE DEEP RECESS	1					
17	B5D–E5413–00	COVER	1					
18	95E32–06045	BOLT, FLANGE DEEP RECESS	1					
19	95E32–06020	BOLT, FLANGE DEEP RECESS	1					

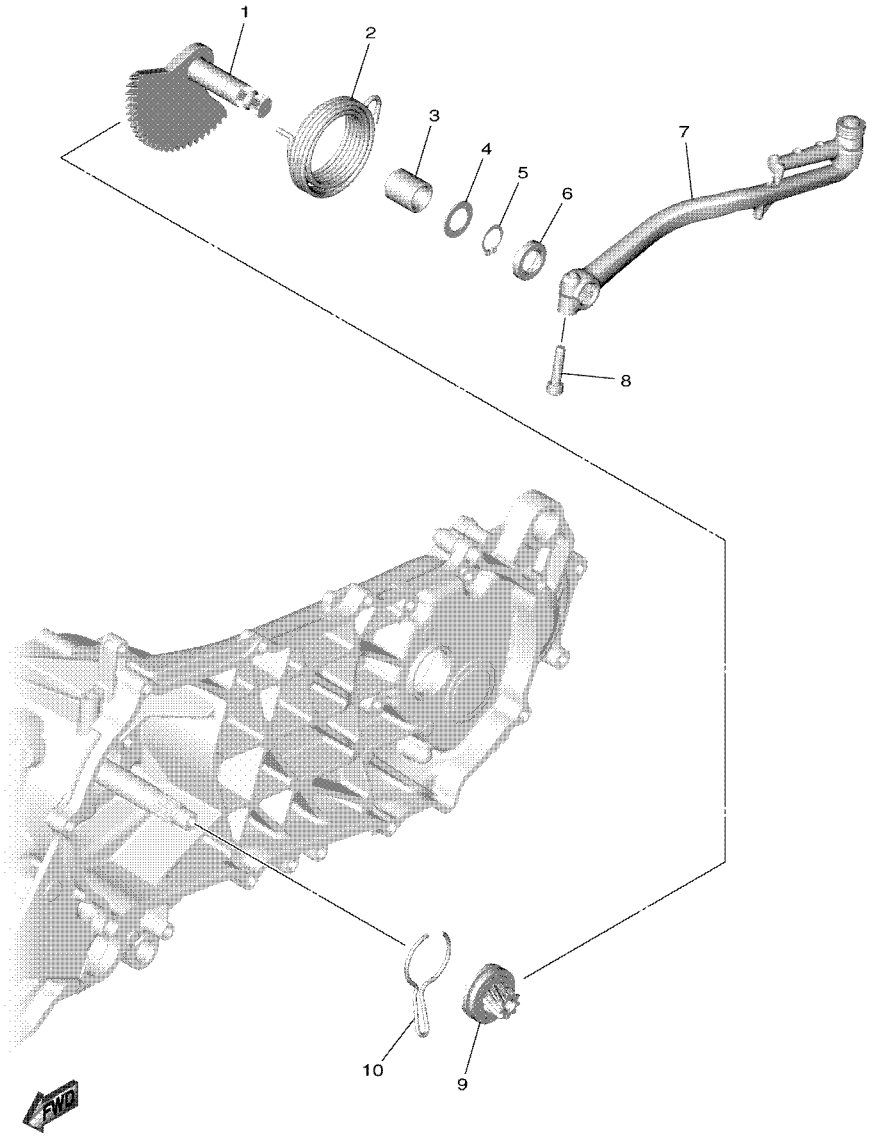

B3W1460DW110

FIG. 11 STARTER

REF. NO.	PART NO.	DESCRIPTION	BES2					REMARKS
1	B5D–E5601–00	KICK SHAFT ASSY	1					
2	90508–32768	SPRING, TORSION	1					
3	90380–15809	BUSH, SOLID	1					
4	90201–154E8	WASHER, PLATE (T=1.0)	1					
5	99009–15400	CIRCLIP	1					
6	93102–15801	OIL SEAL	1					
7	2BL–E5620–10	KICK CRANK ASSY	1					
8	91312–06025	BOLT, HEXAGON SOCKET HEAD	1					
9	B5D–E5630–00	KICK PINION ASSY	1					
10	5MX–E5673–00	CLIP	1					

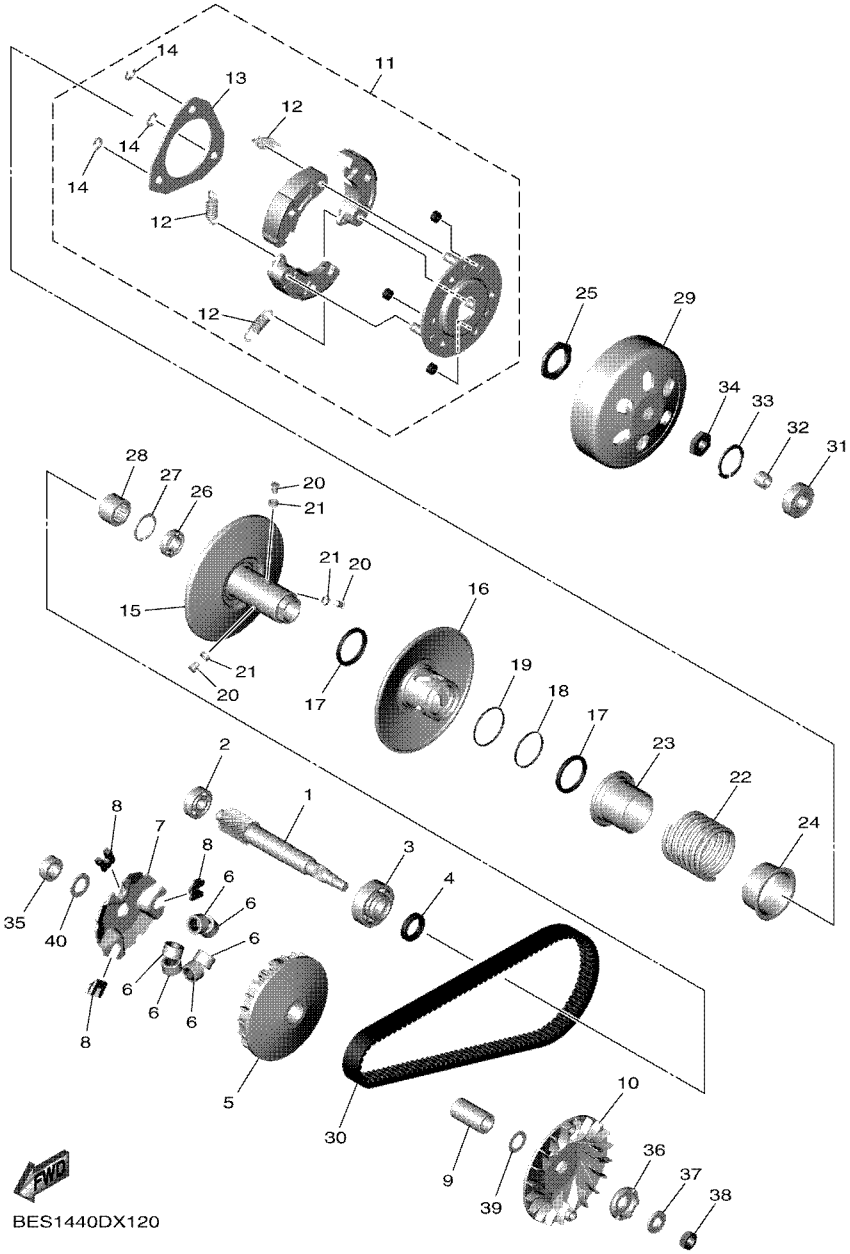

FIG. 12 CLUTCH

REF. NO.	PART NO.	DESCRIPTION	BES2					REMARKS
1	2PH–E6111–00	GEAR, PRIMARY DRIVE (16T)	1					UR Either can use
	2PH–E6111–10	GEAR, PRIMARY DRIVE (16T)	1					UR Either can use
2	93306–201YS	BEARING	1					
3	93306–204XX	BEARING	1					
4	93102–20815	OIL SEAL	1					
5	2SX–E7620–00	PRIMARY SLIDING SHEAVE COMP.	1					
6	2PH–E7632–20	WEIGHT	6					
7	2SX–E7623–10	CAM	1					
8	2SX–E7653–00	SLIDER	3					
9	54P–E7674–00	COLLAR, GUIDE	1					
10	44D–E7611–00	SHEAVE, PRIMARY FIXED	1					
11	2SX–E6620–10	CLUTCH CARRIER ASSY	1					
12	2DS–E6626–00	.SPRING, CLUTCH WEIGHT 1	3					
13	2DP–E6523–00	.PLATE, WEIGHT THRUST	1					
14	54P–E6819–00	.CIRCLIP, CLUTCH	3					
15	2SX–E7660–10	SECONDARY FIXED SHEAVE COMP.	1					
16	2SX–E7670–00	SECONDARY SLIDING SHEAVE	1					
17	2SX–E7465–00	SEAL	2					
18	2SX–E7465–30	SEAL	1					
19	2SX–E7465–20	SEAL	1					
20	2DP–E7664–00	PIN, GUIDE	3					
21	2DP–E7674–10	COLLAR, GUIDE	3					
22	2SX–E7683–10	SPRING, SECONDARY	1					
23	2SX–E7684–00	SEAT, SECONDARY SPRING	1					
24	2SX–E7644–10	SEAT,SPRING	1					
25	2DP–E7668–00	NUT	1					
26	2DP–E7678–00	BEARING	1					

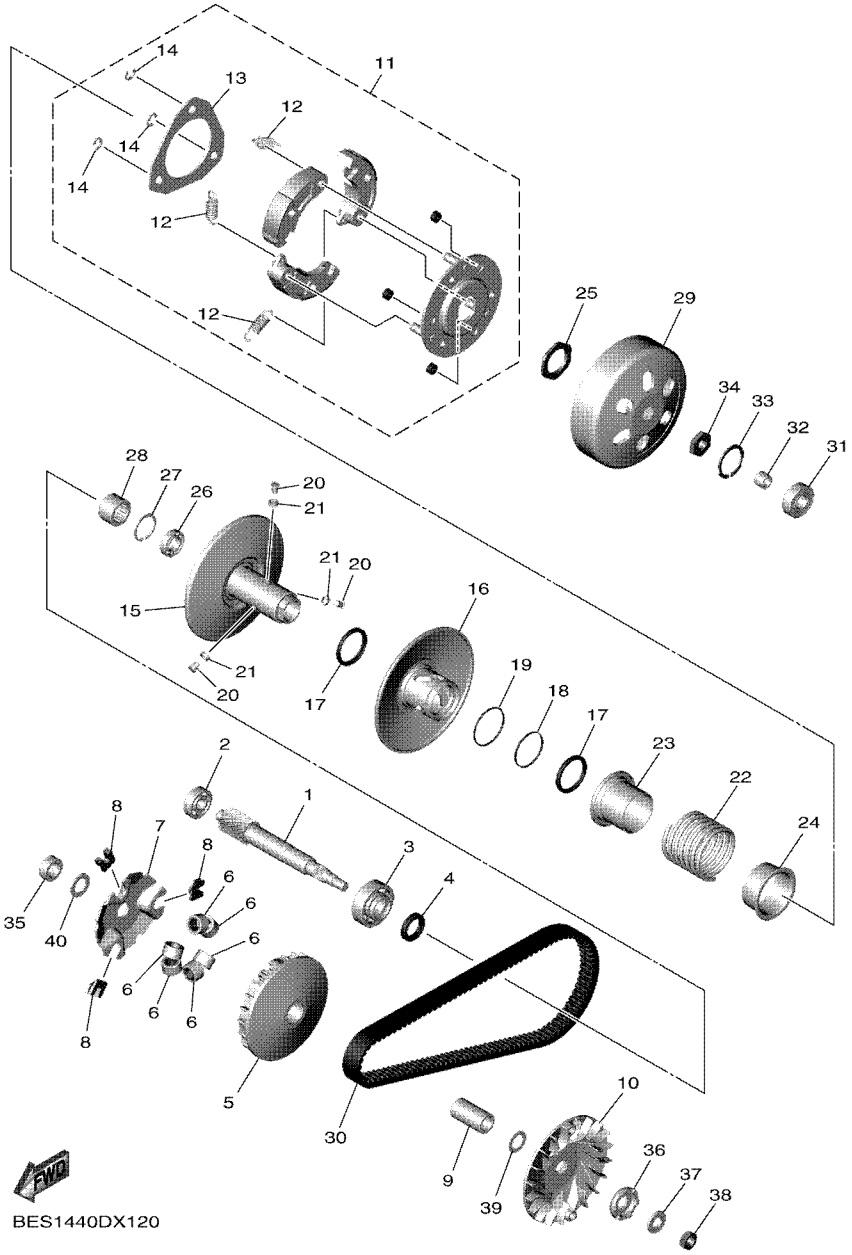

FIG. 12 CLUTCH

REF. NO.	PART NO.	DESCRIPTION	BES2					REMARKS
27	2DP–E5744–00	CIRCLIP	1					
28	2DP–E7678–10	BEARING	1					
29	2SX–E6611–00	CLUTCH HOUSING COMP.	1					
30	2PH–E7641–00	V-BELT	1					
31	933A6–202Y0	BEARING	1					
32	90380–10803	BUSH, SOLID	1					
33	99009–35700	CIRCLIP	1					
34	90170–12803	NUT	1					
35	90387–16819	COLLAR	1					
36	5MX–E5657–00	CLUTCH, ONEWAY	1					
37	90208–12808	WASHER, CONICAL SPRING	1					
38	90170–12800	NUT	1					
39	90201–15845	WASHER, PLATE	1					
40	90201–16816	WASHER, PLATE	1					

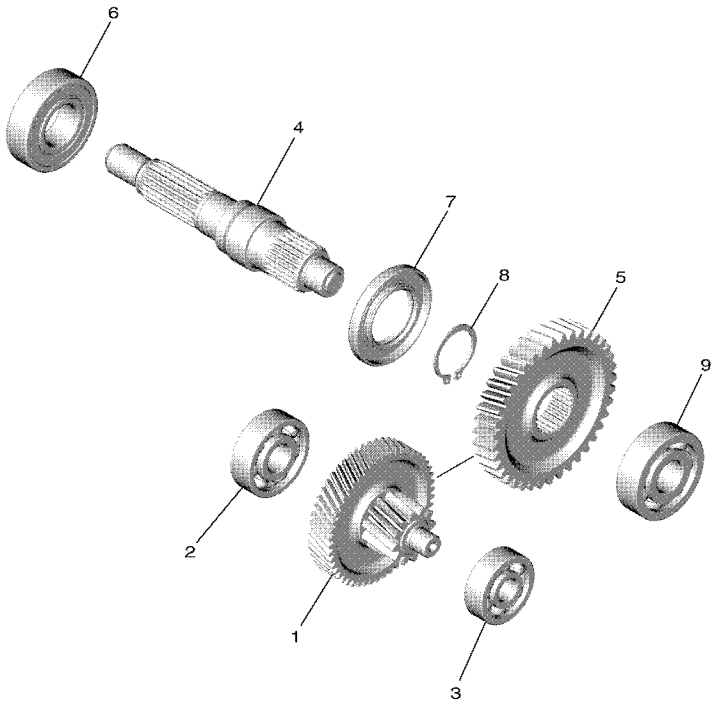

B3W1460DW130

FIG. 13 TRANSMISSION

REF. NO.	PART NO.	DESCRIPTION	BES2					REMARKS
1	B5D–E7410–00	MAIN AXLE COMP. (12T/50T)	1					UR Either can use
	B5D–E7410–10	MAIN AXLE COMP. (12T/50T)	1					UR Either can use
	B5D–E7410–20	MAIN AXLE COMP. (12T/50T)	1					UR Either can use
	B5D–E7410–30	MAIN AXLE COMP. (12T/50T)	1					UR Either can use
	B5D–E7410–40	MAIN AXLE COMP. (12T/50T)	1					UR Either can use
2	93306–302YU	BEARING	1					
3	93306–351Y8	BEARING	1					
4	B5D–E7421–00	AXLE, DRIVE	1					
5	2PH–E7211–20	GEAR, 1ST WHEEL (39T)	1					UR Either can use
	2PH–E7211–30	GEAR, 1ST WHEEL (39T)	1					UR Either can use
	2PH–E7211–40	GEAR, 1ST WHEEL (39T)	1					UR Either can use
6	93306–272YB	BEARING	1					
7	93102–30805	OIL SEAL	1					
8	99009–25400	CIRCLIP	1					
9	93306–303YU	BEARING	1					

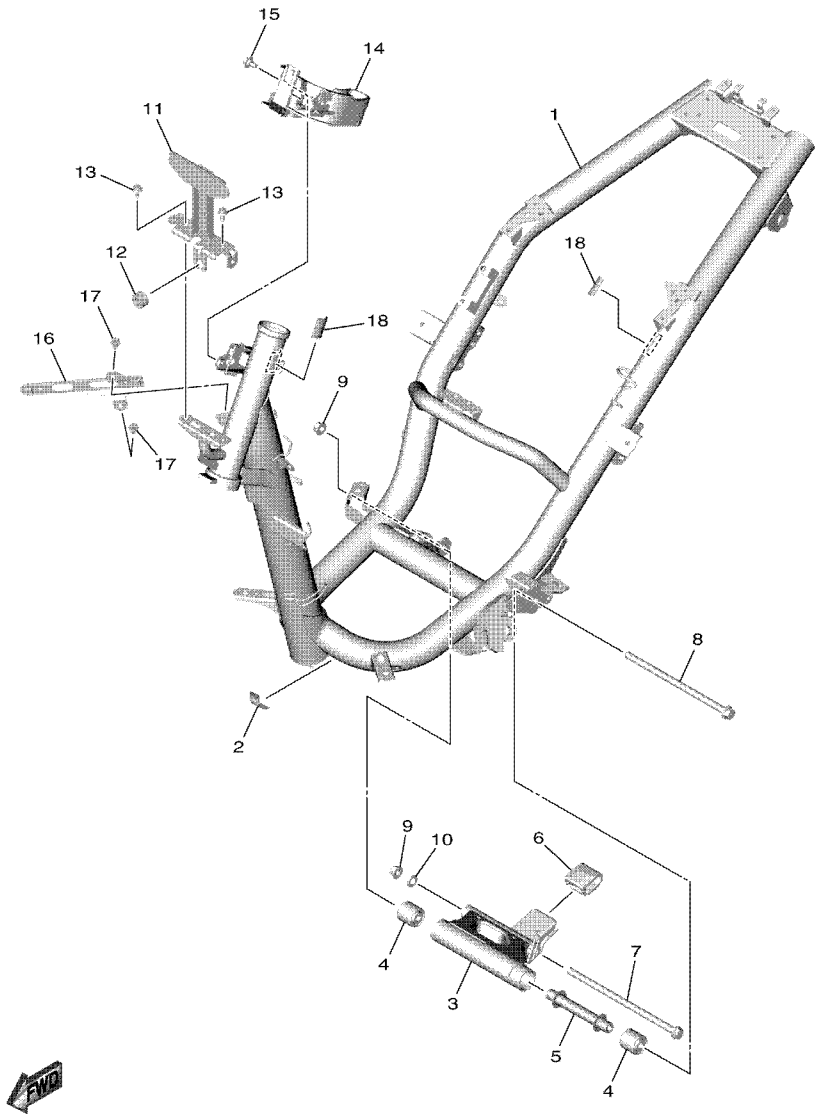

B3W1460DW140

FIG. 14 FRAME

REF. NO.	PART NO.	DESCRIPTION	BES2					REMARKS
1	BES–F1110–00	FRAME COMP.	1					
2	5D9–F414G–00	SEAL	1					
3	2PH–F1410–20	ENGINE BRACKET COMP.	1					
4	90388–10800	DAMPER	2					
5	54P–F1459–00	SPACER	1					UR Either can use
	BJ7–F1459–00	SPACER	1					UR Either can use
6	2PH–F7114–00	STOPPER, MAIN STAND	1					
7	90105–108B2	BOLT, FLANGE	1					
8	54P–F2141–00	SHAFT, PIVOT	1					
9	95602–10200	NUT, SELF-LOCKING	2					
10	92907–10600	WASHER, PLATE	1					
11	BES–F8356–00	STAY 1	1					
12	90480–14004	GROMMET	1					
13	95802–06012	BOLT, FLANGE	2					
14	BES–F1288–00	GUIDE, CABLE	1					
15	90109–068B5	BOLT	1					
16	BES–F8358–00	STAY 3	1					
17	95D32–06010	BOLT, FLANGE DEEP RECESS	2					
18	90520–02806	DAMPER, PLATE	2					

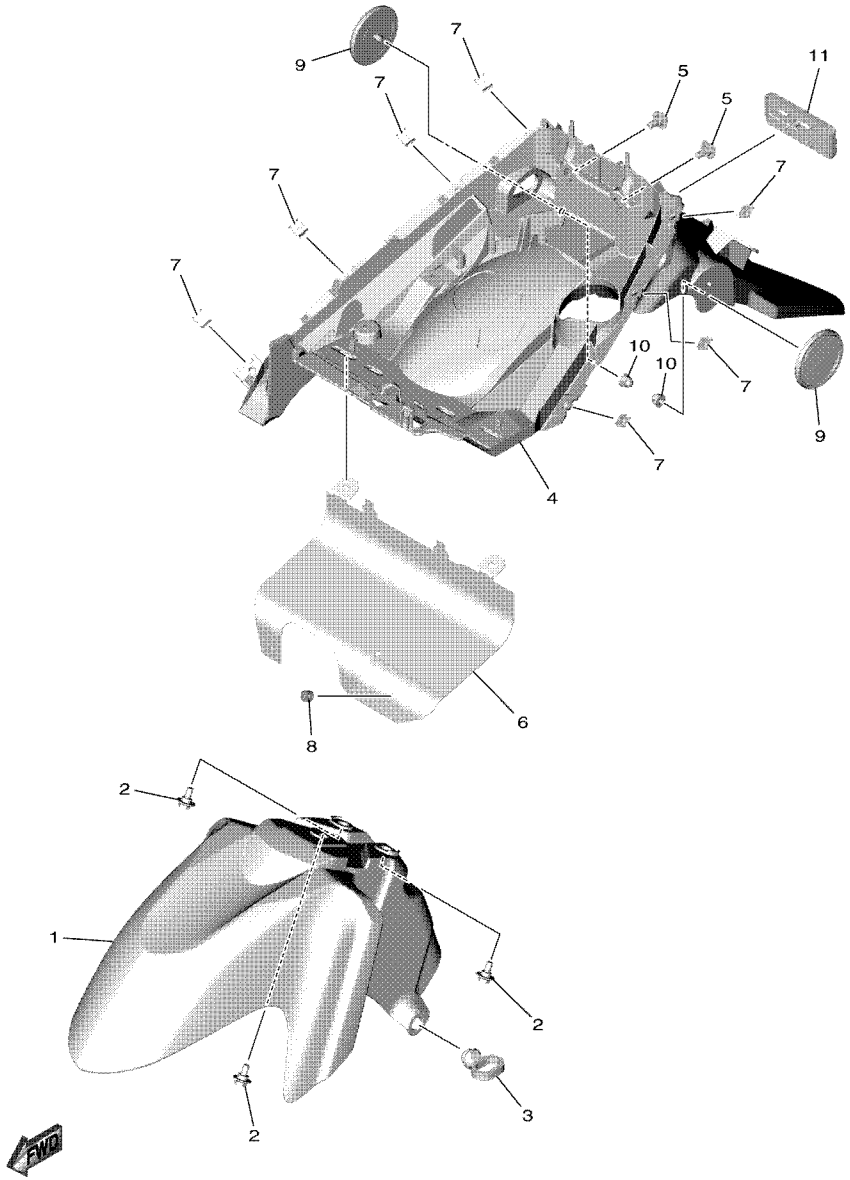

BES2440DY150

FIG. 15 FENDER

REF. NO.	PART NO.	DESCRIPTION	BES2					REMARKS
1	BES–F1511–00–P3	FENDER, FRONT	1					UR FOR LCM4
	BES–F1511–00–P4	FENDER, FRONT	1					UR FOR LLGS6
	BES–F1511–00–P5	FENDER, FRONT	1					UR FOR DNLGM1
2	90109–068B5	BOLT	3					
3	15K–F1518–00	HOLDER, CABLE	1					
4	BES–F1611–00	FENDER, REAR	1					
5	90109–068B5	BOLT	2					
6	BES–F1621–00	FLAP	1					
7	90183–05807	NUT, SPRING	7					
8	90480–10003	GROMMET	1					
9	2FC–H5111–00	REFLECTOR, 1	2					
10	90185–05803	NUT, SELF-LOCKING	2					
11	55D–H5130–00	REAR REFLECTOR ASSY	1					UR Either can use
	BE1–H5130–00	REAR REFLECTOR ASSY	1					UR Either can use

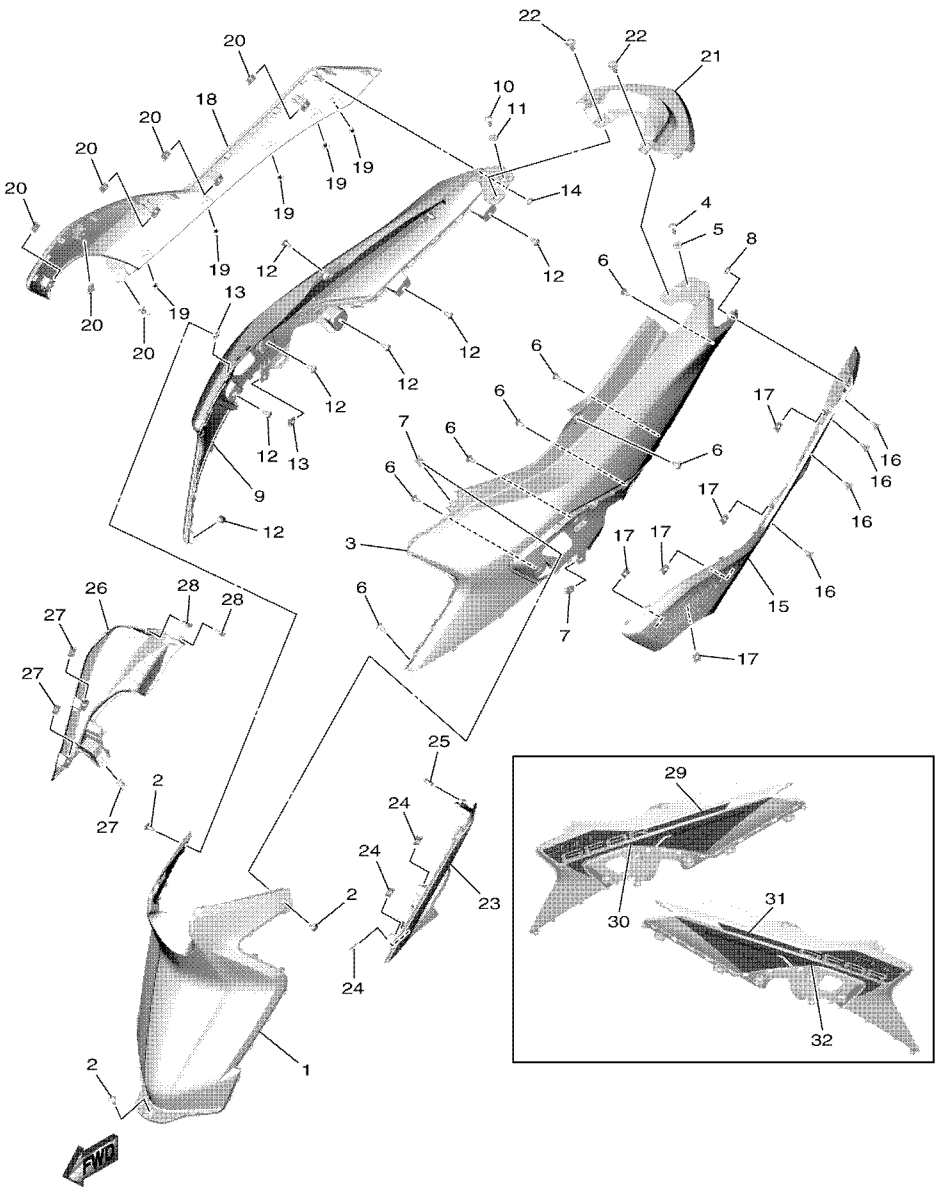

BES2440DY160

FIG. 16 SIDE COVER

REF. NO.	PART NO.	DESCRIPTION	BES2					REMARKS
1	BES–F172W–01	COVER	1					
2	97707–50012	SCREW, TRUSS HEAD TAPPING	3					
3	BES–F1711–00–P3	COVER, SIDE 1	1					UR FOR LLGS6
	BES–F1711–00–P4	COVER, SIDE 1	1					UR FOR DNLGM1
	BES–F1711–00–WN	COVER, SIDE 1	1					UR FOR LCM4
4	97707–50016	SCREW, TRUSS HEAD TAPPING	1					
5	90387–05820	COLLAR	1					
6	97707–50012	SCREW, TRUSS HEAD TAPPING	7					
7	90183–05807	NUT, SPRING	2					
8	90183–04005	NUT, SPRING	1					
9	BES–F1721–00–P3	COVER, SIDE 2	1					UR FOR LLGS6
	BES–F1721–00–P4	COVER, SIDE 2	1					UR FOR DNLGM1
	BES–F1721–00–WN	COVER, SIDE 2	1					UR FOR LCM4
10	97707–50016	SCREW, TRUSS HEAD TAPPING	1					
11	90387–05820	COLLAR	1					
12	97707–50012	SCREW, TRUSS HEAD TAPPING	7					
13	90183–05807	NUT, SPRING	2					
14	90183–04005	NUT, SPRING	1					
15	BES–F1731–01	COVER, SIDE 3	1					
16	97707–50012	SCREW, TRUSS HEAD TAPPING	4					
17	90183–05807	NUT, SPRING	5					
18	BES–F1741–01	COVER, SIDE 4	1					
19	97707–50012	SCREW, TRUSS HEAD TAPPING	5					
20	90183–05807	NUT, SPRING	6					
21	BES–F171E–00	COVER, SIDE 5	1					
22	90159–06810	SCREW, WITH WASHER	2					
23	BES–F1716–01	LID, SIDE COVER	1					

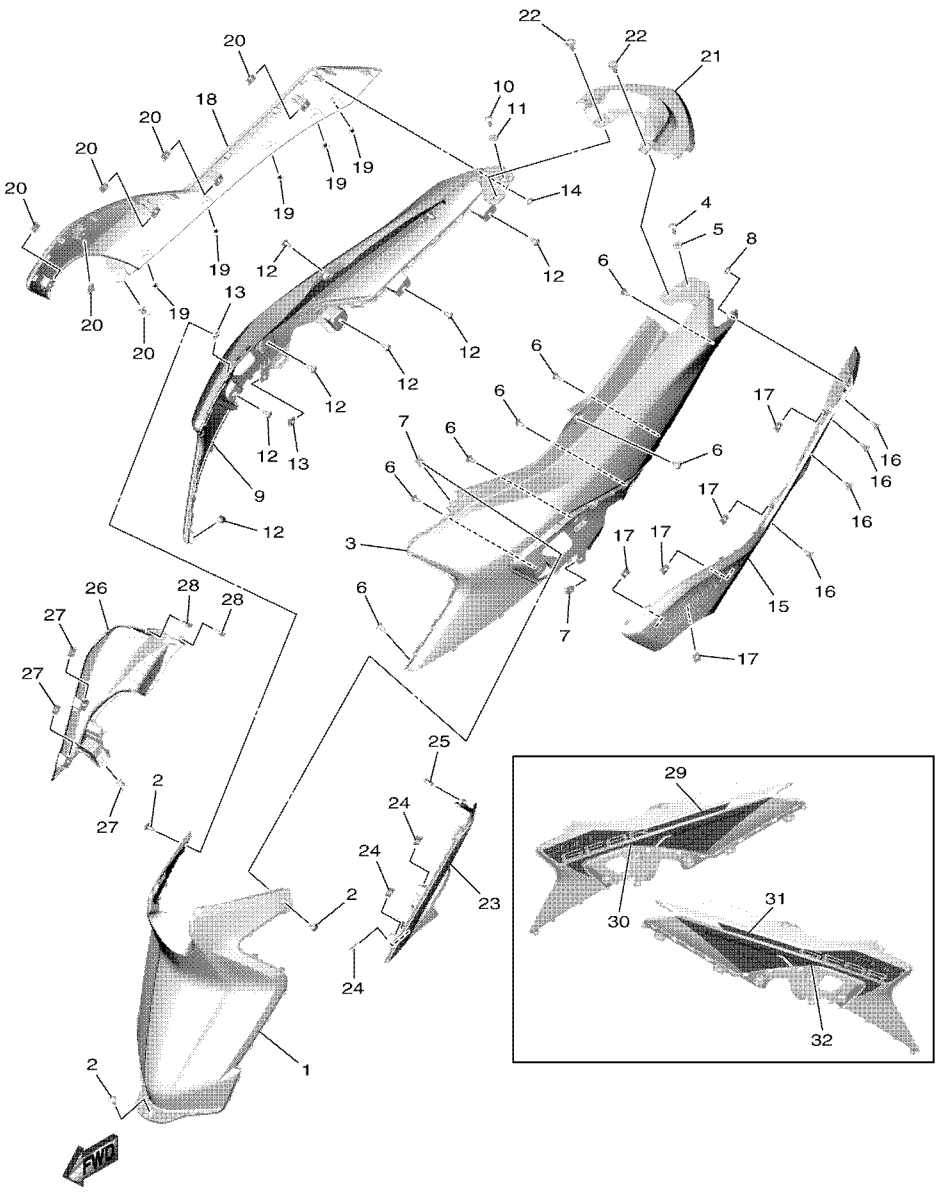

BES2440DY160

FIG. 16 SIDE COVER

REF. NO.	PART NO.	DESCRIPTION	BES2					REMARKS
24	90183–05807	NUT, SPRING	3					
25	90464–04801	CLAMP	1					
26	BES–F1726–01	LID, SIDE COVER 2	1					
27	90183–05807	NUT, SPRING	3					
28	90464–04801	CLAMP	2					
29	BES–F173E–30	GRAPHIC 1	1					UR FOR LCM4
	BES–F173E–40	GRAPHIC 1	1					UR FOR LLGS6
	BES–F173E–50	GRAPHIC 1	1					UR FOR DNLGM1
30	BES–F173F–30	GRAPHIC 2	1					UR FOR LCM4
	BES–F173F–40	GRAPHIC 2	1					UR FOR LLGS6
	BES–F173F–50	GRAPHIC 2	1					UR FOR DNLGM1
31	BES–F174G–30	GRAPHIC 3	1					UR FOR LCM4
	BES–F174G–40	GRAPHIC 3	1					UR FOR LLGS6
	BES–F174G–50	GRAPHIC 3	1					UR FOR DNLGM1
32	BES–F174H–30	GRAPHIC 4	1					UR FOR LCM4
	BES–F174H–40	GRAPHIC 4	1					UR FOR LLGS6
	BES–F174H–50	GRAPHIC 4	1					UR FOR DNLGM1

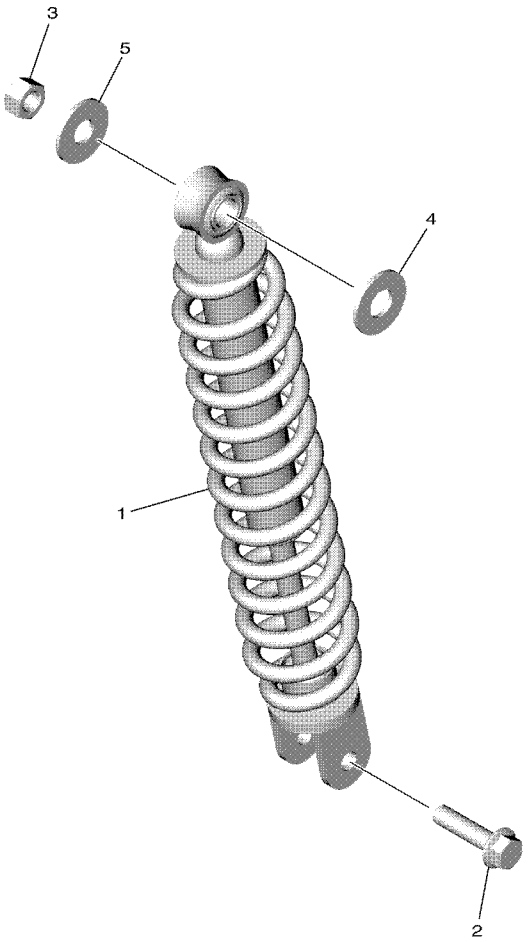

B3W1460DW170

FIG. 17 REAR SUSPENSION

REF. NO.	PART NO.	DESCRIPTION	BES2					REMARKS
1	10C–F2210–30	SHOCK ABSORBER ASSY, REAR	1					
2	90105–088H4	BOLT, FLANGE	1					
3	95302–10600	NUT, HEXAGON	1					
4	90201–12028	WASHER, PLATE	1					
5	90201–10065	WASHER, PLATE	1					

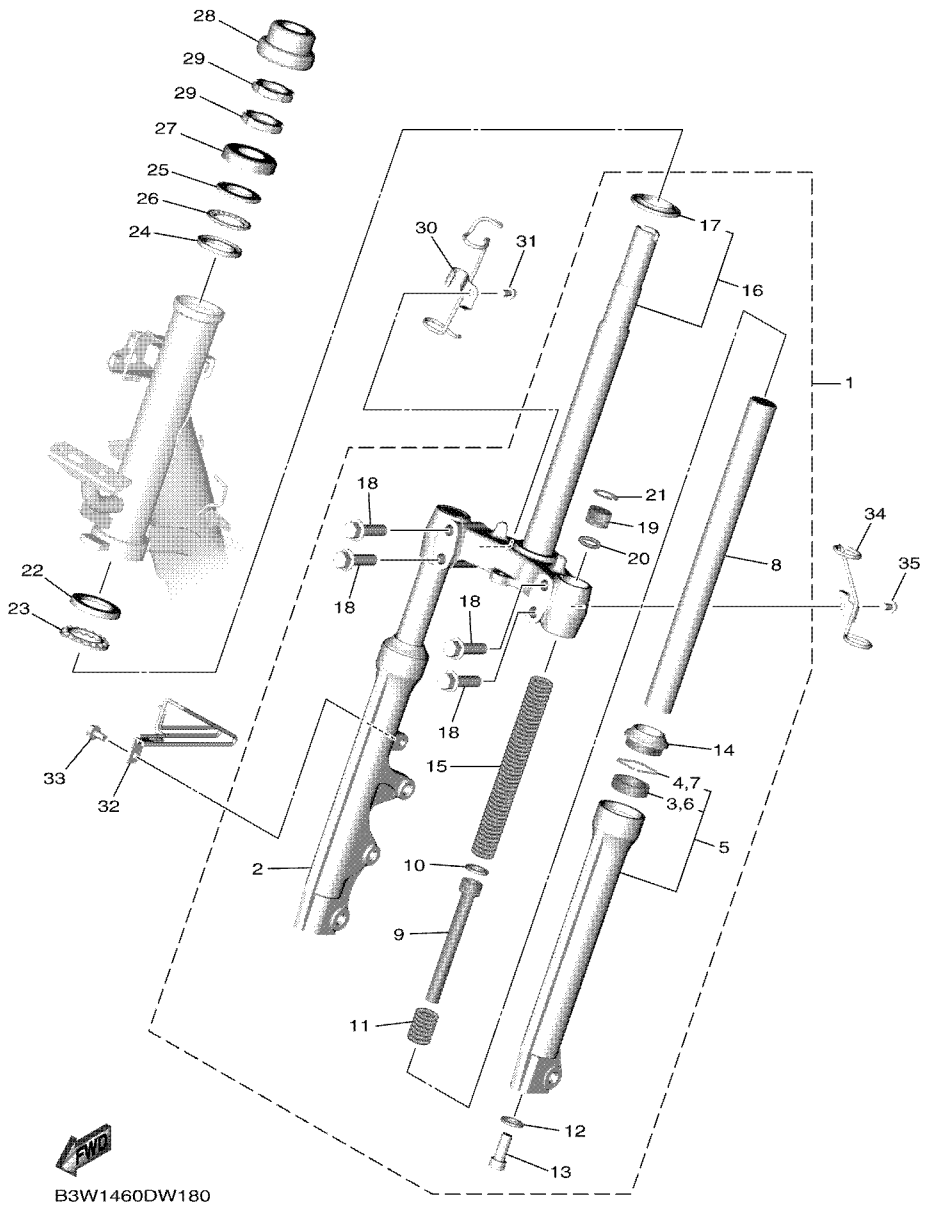

FIG. 18 STEERING

REF. NO.	PART NO.	DESCRIPTION	BES2					REMARKS
1	B92–F3100–00	FRONT FORK ASSY	1					
2	B92–F3136–00	.TUBE, OUTER 2	1					
3	4UV–F3145–00	..OIL SEAL	1					
4	5P0–F3156–00	..RING, SNAP	1					
5	B92–F3126–00	.TUBE, OUTER (L.H)	1					
6	4UV–F3145–00	..OIL SEAL	1					
7	5P0–F3156–00	..RING, SNAP	1					
8	B92–F3110–00	.INNER TUBE COMP.1	2					
9	B92–F3170–00	.CYLINDER COMP., FRONT FORK	2					
10	2JG–F3157–00	.RING, PISTON	2					
11	5TF–F3152–00	.SPRING, SUB	2					
12	509–F3158–L0	.GASKET	2					
13	31D–F3181–50	.BOLT, HEXAGON SOCKET HEAD	2					
14	5LL–F3144–00	.SEAL, DUST	2					
15	B92–F3141–00	.SPRING, FRONT FORK	2					
16	B92–F3340–00	.UNDER BRACKET COMP.	1					
17	4FP–F3411–10	..RACE, BALL 1	1					
18	4D0–F3346–00	.BOLT 1	4					
19	1FC–F3111–10	.BOLT, CAP	2					
20	2JG–F3147–00	.O-RING	2					
21	31D–F3153–00	.RING, SNAP	2					
22	1KL–F3412–10	RACE, BALL 2	1					
23	5VL–F341E–10	RETAINER, BALL BEARING	1					
24	4RT–F3412–10	RACE, BALL 2	1					
25	4RT–F3411–10	RACE, BALL 1	1					
26	1P6–F341E–10	RETAINER, BALL BEARING	1					
27	2WB–F3416–00	COVER, BALL RACE 2	1					

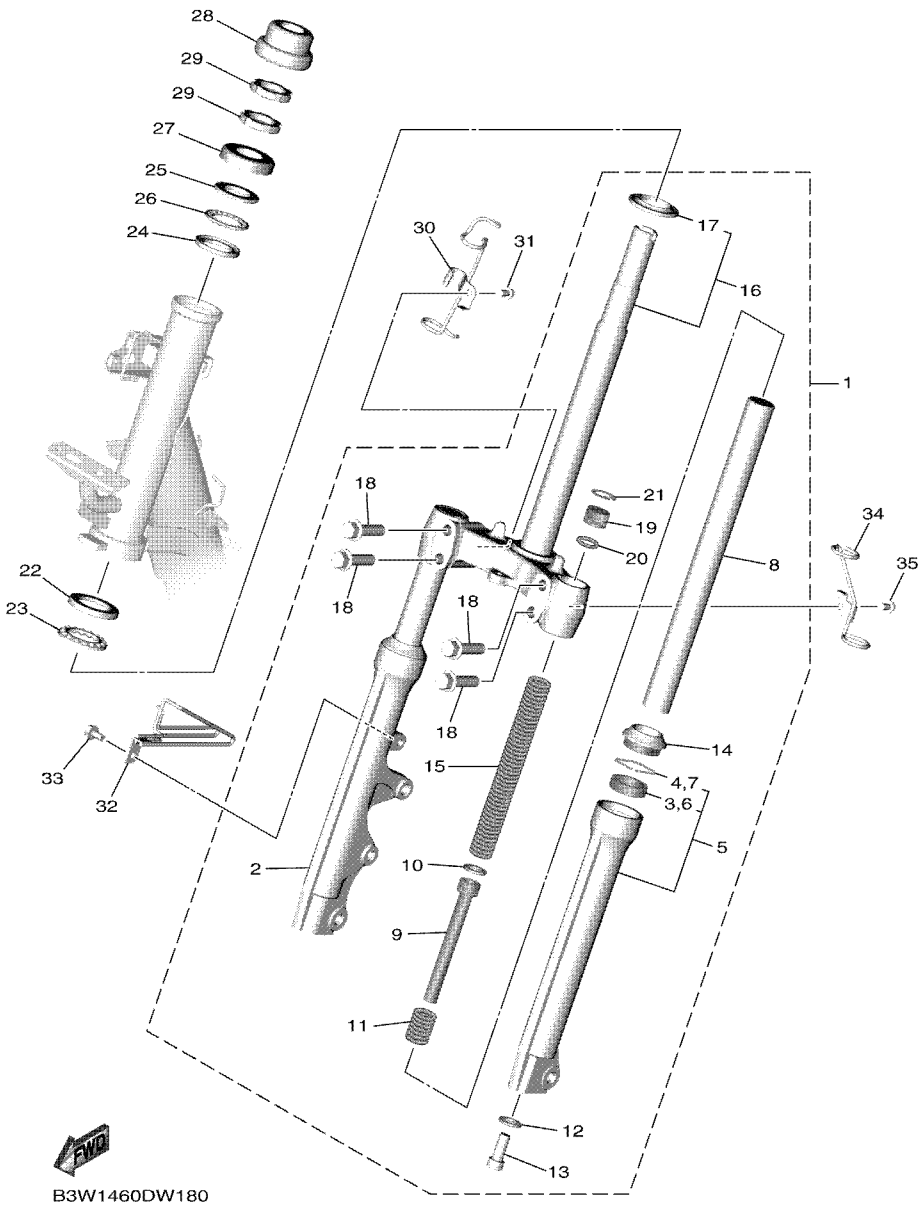

FIG. 18 STEERING

REF. NO.	PART NO.	DESCRIPTION	BES2					REMARKS
28	54P–F3415–00	COVER, BALL RACE 1	1					
29	90179–25812	NUT	2					
30	B92–F5875–00	HOLDER, BRAKE HOSE 1	1					
31	95D02–06010	BOLT, FLANGE DEEP RECESS	1					
32	B92–F5876–00	HOLDER, BRAKE HOSE 2	1					
33	95D32–06012	BOLT, FLANGE DEEP RECESS	1					
34	BES–F1161–00	HOLDER, CABLE	1					
35	95D02–06010	BOLT, FLANGE DEEP RECESS	1					

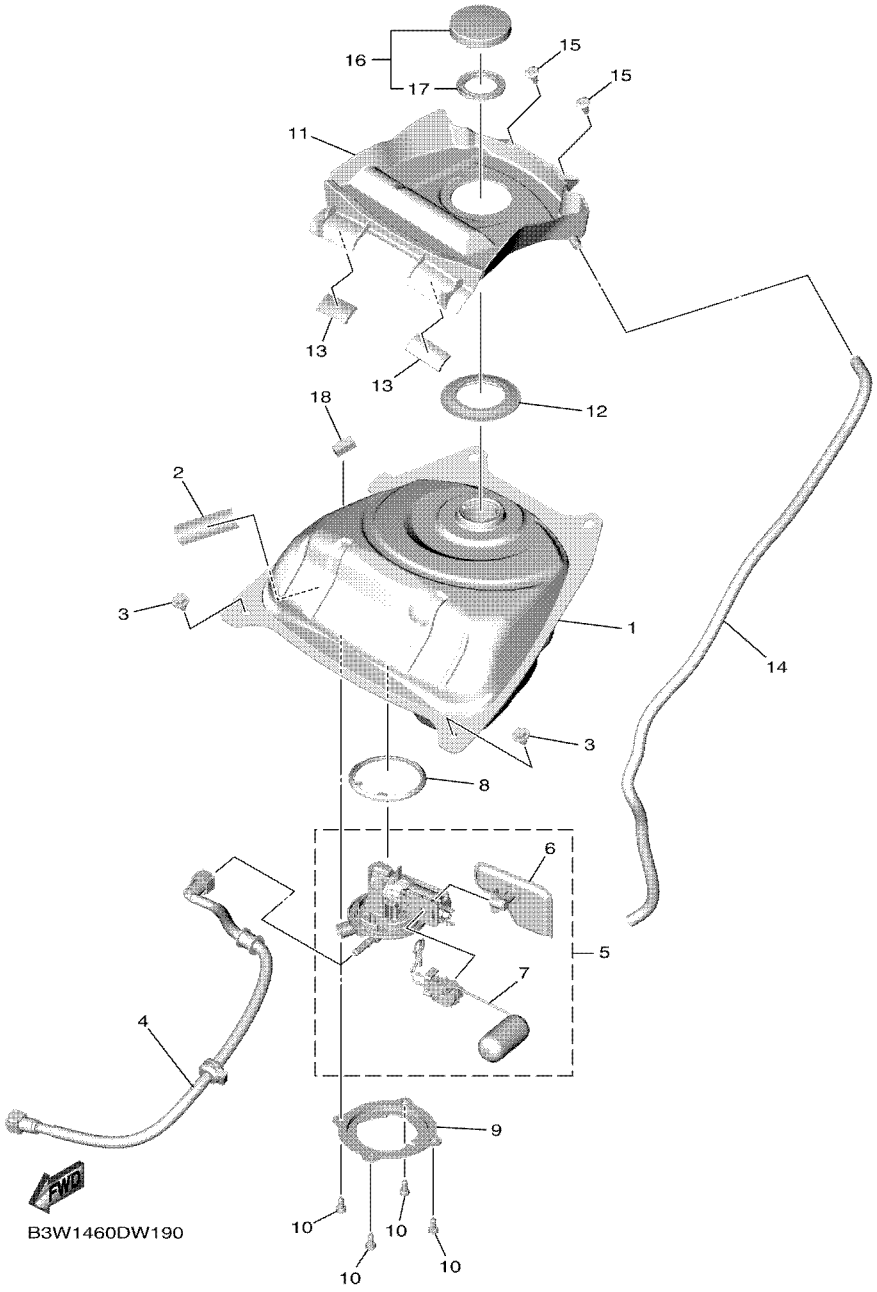

FIG. 19 FUEL TANK

REF. NO.	PART NO.	DESCRIPTION	BES2					REMARKS
1	B92–F4110–00	FUEL TANK COMP.	1					
2	5D9–F414G–00	SEAL	1					
3	90119–06155	BOLT, WITH WASHER	2					
4	2PH–E3971–02	PIPE, FUEL 1	1					
5	B3W–E3907–11	FUEL PUMP COMP.	1					
6	54P–E3915–00	.FILTER, FUEL SUCTION	1					
7	2PH–H5752–00	.SENDER	1					
8	54P–F414G–10	SEAL	1					
9	B92–F4491–00	BRACKET, FUEL PUMP	1					
10	91332–05010	BOLT	4					
11	BES–F41B1–01	COVER, TANK	1					
12	B92–F414G–00	SEAL	1					
13	BBY–H2126–00	PAD, BATTERY	2					
14	91A20–07065	TUBE, FLEXIBLE VINYL	1					
15	90269–06816	RIVET	2					
16	4YY–F4610–00	CAP ASSY	1					
17	4YY–F4612–00	.PACKING, CAP	1					
18	90520–08812	DAMPER, PLATE	1					

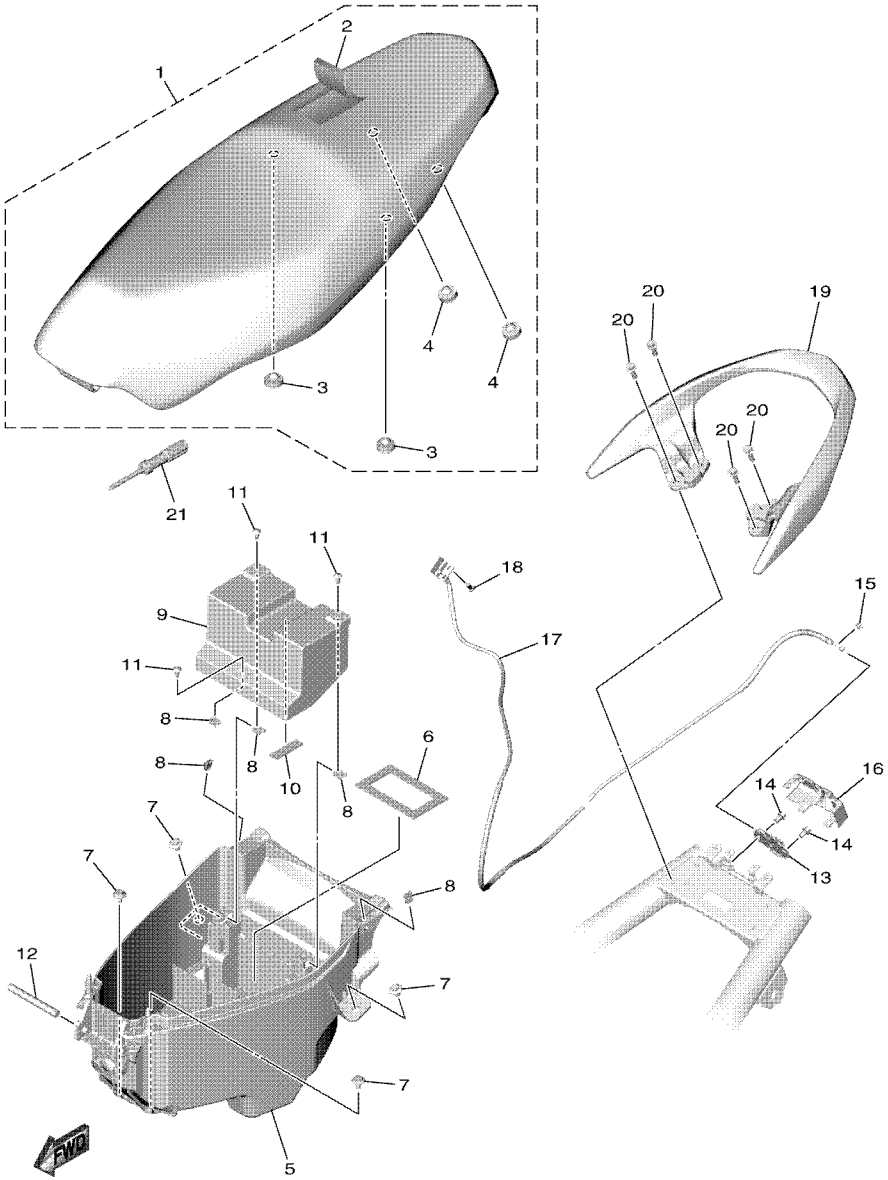

B3W1460DW200

FIG. 20 SEAT

REF. NO.	PART NO.	DESCRIPTION	BES2					REMARKS
1	BES–F4730–00	DOUBLE SEAT ASSY	1					
2	BES–F470F–00	.SEAT COVER COMP.	1					
3	44P–F4741–00	.PAD, SEAT	2					
4	4HF–F4741–00	.PAD, SEAT	2					
5	BES–F473R–00	BOX 1	1					
6	1VB–H2176–00	DAMPER	1					
7	90109–068B4	BOLT	4					
8	90183–05807	NUT, SPRING	5					
9	BES–H2129–01	COVER, BATTERY	1					
10	90520–03806	DAMPER, PLATE	1					
11	97707–50012	SCREW, TRUSS HEAD TAPPING	3					
12	2WB–F4727–00	PIN, SEAT FITTING	1					
13	40D–F4780–01	SEAT LOCK ASSY	1					
14	95E32–06010	BOLT, FLANGE DEEP RECESS	2					
15	1S8–F4768–00	STOPPER	1					
16	B92–F472T–01	COVER, SEAT LOCK	1					
17	2SX–F478E–10	CABLE, SEAT LOCK	1					
18	98507–05010	SCREW, PAN HEAD	1					
19	BES–F4773–00–33	HANDLE, SEAT	1					YB
20	95D32–06020	BOLT, FLANGE DEEP RECESS	4					
21	BES–F8100–00	TOOL KIT	1					

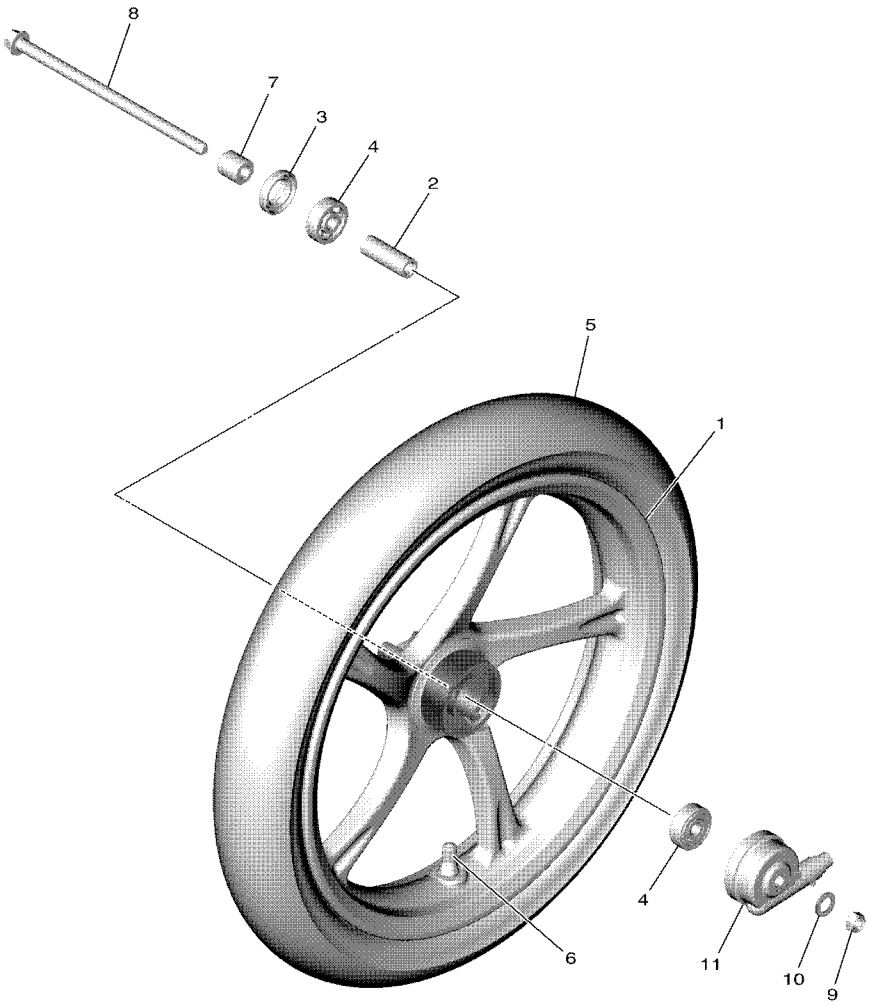

BES1440DW210

FIG. 21 FRONT WHEEL

REF. NO.	PART NO.	DESCRIPTION	BES2					REMARKS
1	1VB–F5168–00–33	CAST WHEEL, FRONT	1					UR FOR LCM4,DNLGM1
	1VB–F5168–00–0X	CAST WHEEL, FRONT	1					UR FOR LLGS6
2	90560–10292	SPACER	1					
3	93106–20808	OIL SEAL	1					
4	93306–300YF	BEARING	2					
5	94107–14808	TIRE (70/90-14M/C 34P N)	1					KENDA
6	93900–00817	VALVE, RIM (TR412)	1					
7	90387–10277	COLLAR	1					
8	2SX–F5181–00	AXLE, WHEEL	1					
9	90185–10012	NUT, SELF-LOCKING	1					
10	90201–10831	WASHER, PLATE	1					
11	5TL–F5190–01	GEAR UNIT ASSY	1					

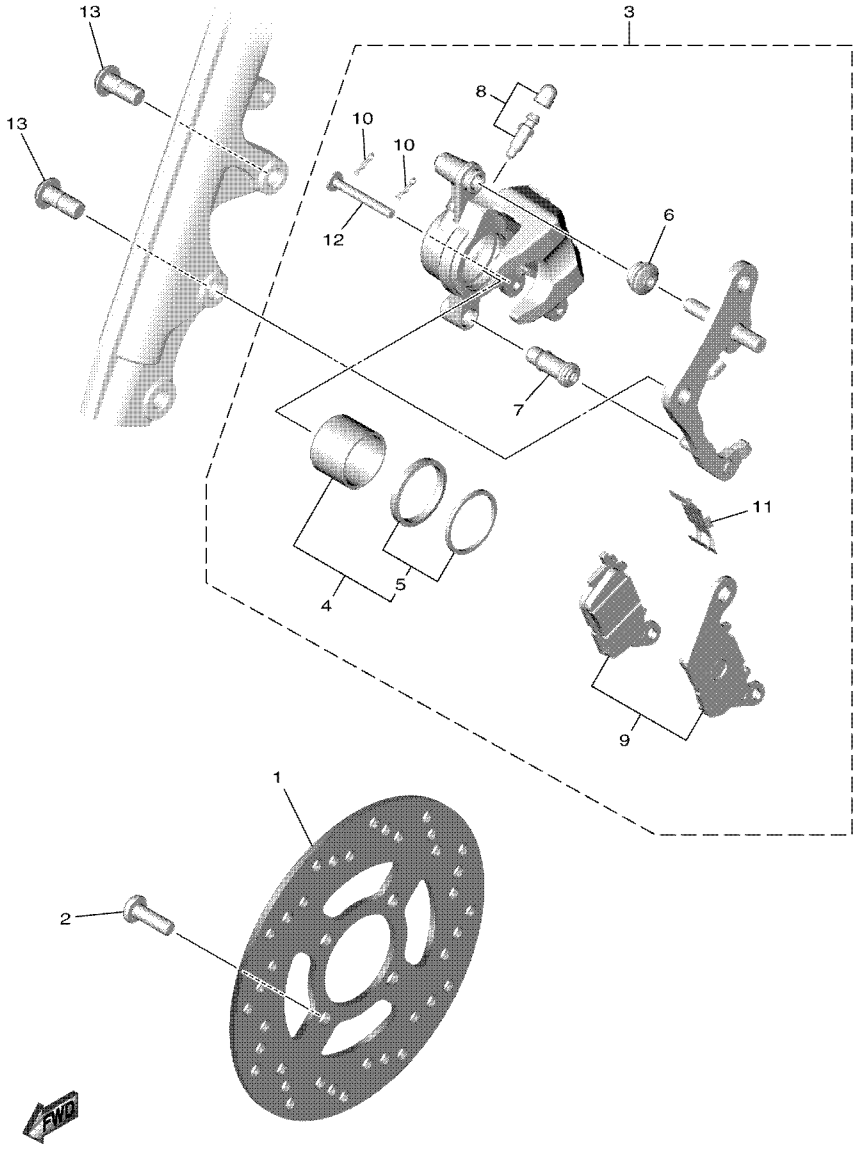

BES1440DW220

FIG. 22 FRONT BRAKE CALIPER

REF. NO.	PART NO.	DESCRIPTION	BES2					REMARKS
1	BES–F582U–00	DISK, BRAKE (RIGHT)	1					
2	90111–08853	BOLT, HEXAGON SOCKET BUTTON	4					
3	2SX–F580U–10	CALIPER ASSY (RIGHT)	1					
4	2BM–F5802–00	.PISTON ASSY, CALIPER	1					
5	5YP–F5803–50	..CALIPER SEAL KIT	1					
6	2BM–F5917–00	.BOOT, CALIPER	1					
7	5YP–F5937–00	.BOOT 2	1					
8	4C9–W0048–00	.BLEED SCREW KIT	1					
9	2BM–F5805–00	.BRAKE PAD KIT	1					
10	5YP–F5925–01	.CLIP	2					
11	2BM–F5919–00	.SUPPORT, PAD	1					
12	5YP–F5924–10	.PIN, PAD	1					
13	90105–10831	BOLT, FLANGE	2					

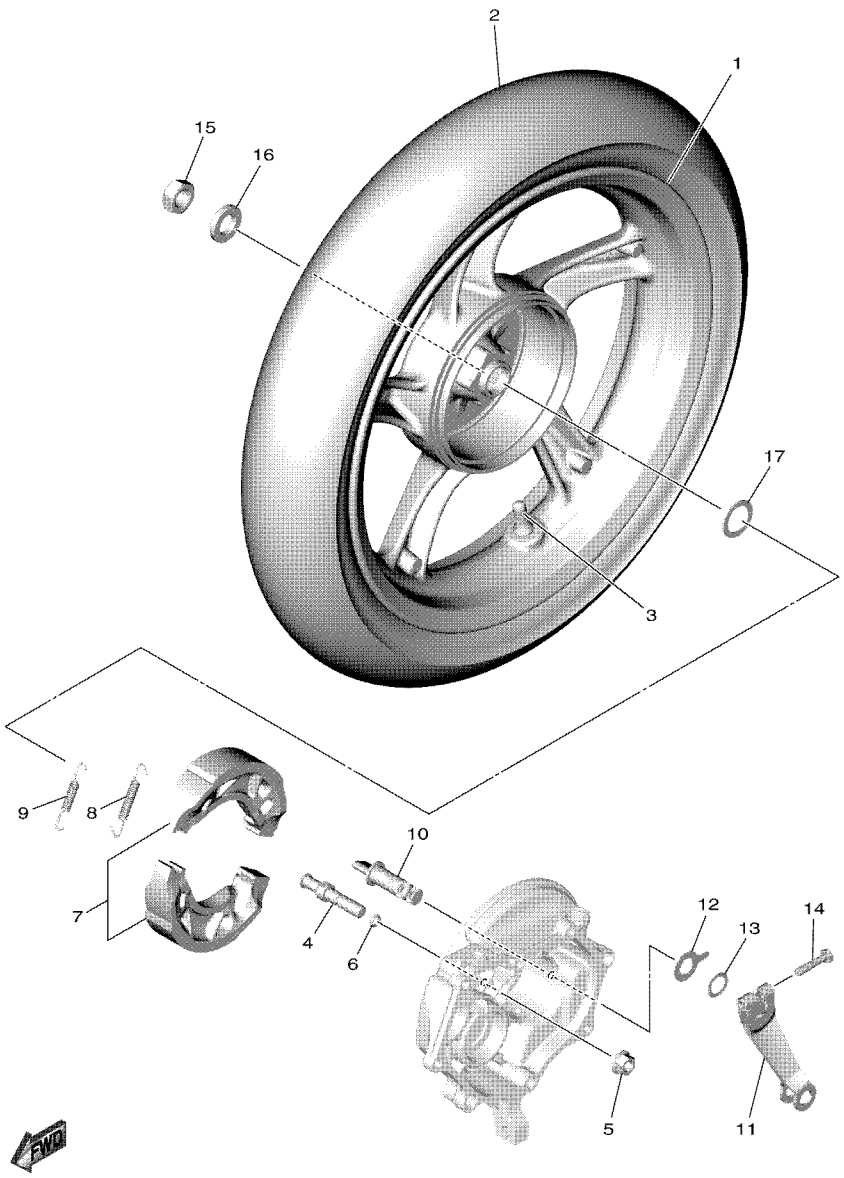

B3W1460DW230

FIG. 23 REAR WHEEL

REF. NO.	PART NO.	DESCRIPTION	BES2					REMARKS
1	44P–F5338–00–33	CAST WHEEL, REAR	1					UR FOR LCM4,DNLGM1
	44P–F5338–00–0X	CAST WHEEL, REAR	1					UR FOR LLGS6
2	94109–14804	TIRE(90/80-14M/C 49P REINF N)	1					KENDA
3	93900–00817	VALVE, RIM (TR412)	1					
4	54P–F5326–00	PIN, PIVOT	1					
5	95702–10500	NUT, FLANGE	1					
6	93210–07802	O-RING	1					
7	5LW–F530K–00	BRAKE SHOE SET	1					
8	90506–12001	SPRING, TENSION	1					
9	90506–15001	SPRING, TENSION	1					
10	10C–F5351–00	CAMSHAFT	1					
11	B92–F5355–00	LEVER, CAMSHAFT	1					
12	5LW–F533A–00	PLATE, INDICATOR	1					
13	90206–14093	WASHER, WAVE	1					
14	90101–06046	BOLT	1					
15	90185–16800	NUT, SELF-LOCKING	1					
16	90201–16810	WASHER, PLATE	1					
17	90201–220J8	WASHER, PLATE	1					

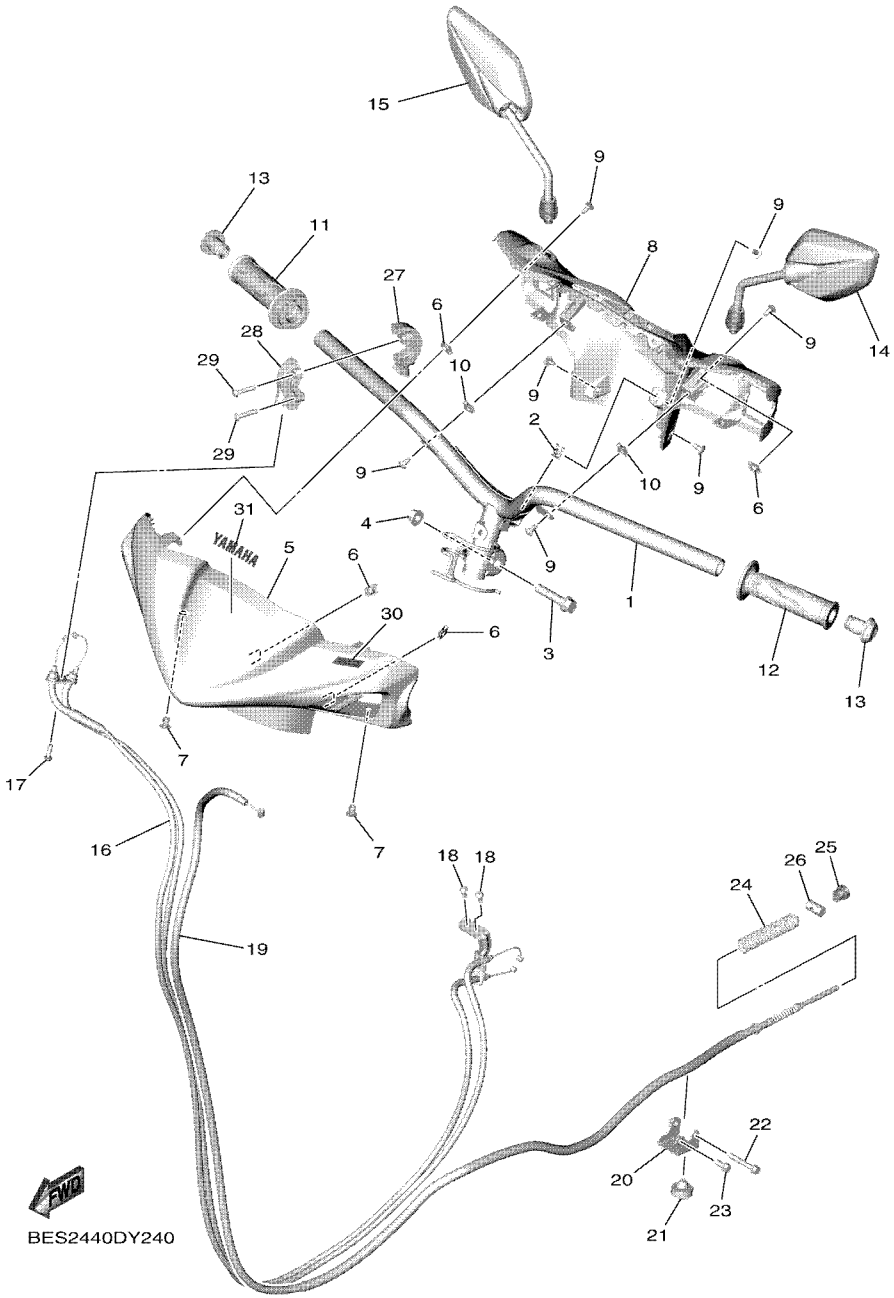

FIG. 24 STEERING HANDLE & CABLE

REF. NO.	PART NO.	DESCRIPTION	BES2					REMARKS
1	BES–F6110–00	HANDLE COMP.	1					
2	90183–05807	NUT, SPRING	1					
3	90105–10896	BOLT, FLANGE	1					
4	90185–10011	NUT, SELF-LOCKING	1					
5	BES–F6143–00–P3	COVER, HANDLE UPPER 1	1					UR FOR LCM4
	BES–F6143–00–P4	COVER, HANDLE UPPER 1	1					UR FOR LLGS6
	BES–F6143–00–P5	COVER, HANDLE UPPER 1	1					UR FOR DNLGM1
6	90183–05807	NUT, SPRING	4					
7	90269–06816	RIVET	2					
8	BES–F6145–00	COVER, HANDLE UPPER 2	1					
9	97707–50012	SCREW, TRUSS HEAD TAPPING	7					
10	90183–05807	NUT, SPRING	2					
11	B92–F6240–00	GRIP ASSY	1					
12	1VP–F6241–00	GRIP	1					
13	B92–F6246–00	END, GRIP	2					
14	2WB–F6280–00	REAR VIEW MIRROR ASSY (LEFT)	1					
15	2WB–F6290–00	REAR VIEW MIRROR ASSY (RIGHT)	1					
16	BES–F6301–00	THROTTLE CABLE ASSY	1					UR Either can use
	B3W–F6301–00	THROTTLE CABLE ASSY	1					UR Either can use
	B3W–F6301–10	THROTTLE CABLE ASSY	1					UR Either can use
17	92012–05016	BOLT, BUTTON HEAD	1					
18	92012–05010	BOLT, BUTTON HEAD	2					
19	2SX–F6351–00	CABLE, BRAKE	1					
20	B92–F637G–00	HOLDER, WIRE	1					
21	B92–F6257–00	STOPPER	1					
22	95E32–06040	BOLT, FLANGE DEEP RECESS	1					
23	95E32–06014	BOLT, FLANGE DEEP RECESS	1					

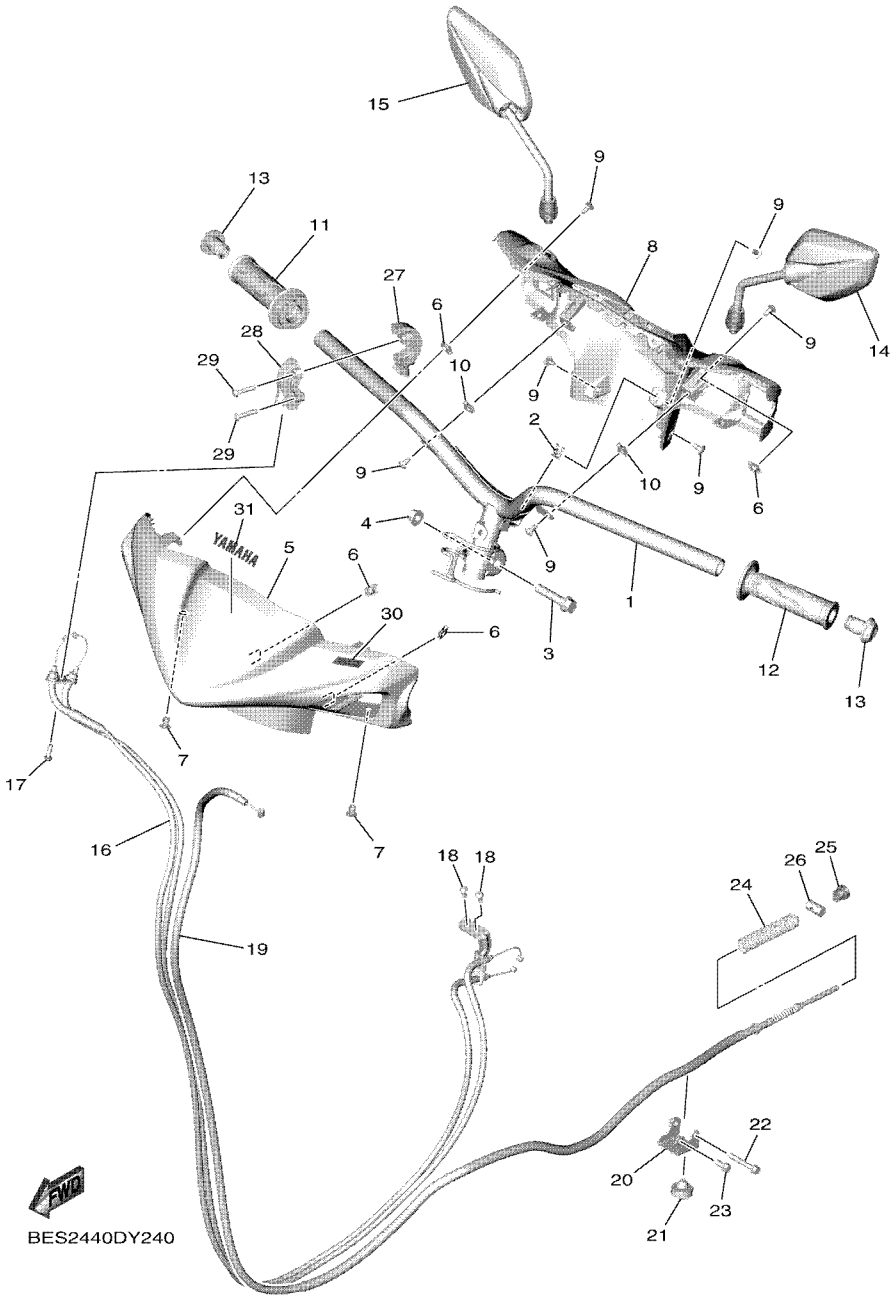

FIG. 24 STEERING HANDLE & CABLE

REF. NO.	PART NO.	DESCRIPTION	BES2					REMARKS
24	90501–16003	SPRING, COMPRESSION	1					
25	90179–06411	NUT	1					
26	90249–12008	PIN	1					
27	55D–F6281–00	CAP, GRIP UPPER	1					
28	55D–F6282–00	CAP, GRIP UNDER	1					
29	98502–05025	SCREW, PAN HEAD	2					
30	B92–F1737–00	EMBLEM	1					
31	99237–00080	EMBLEM, YAMAHA	1					

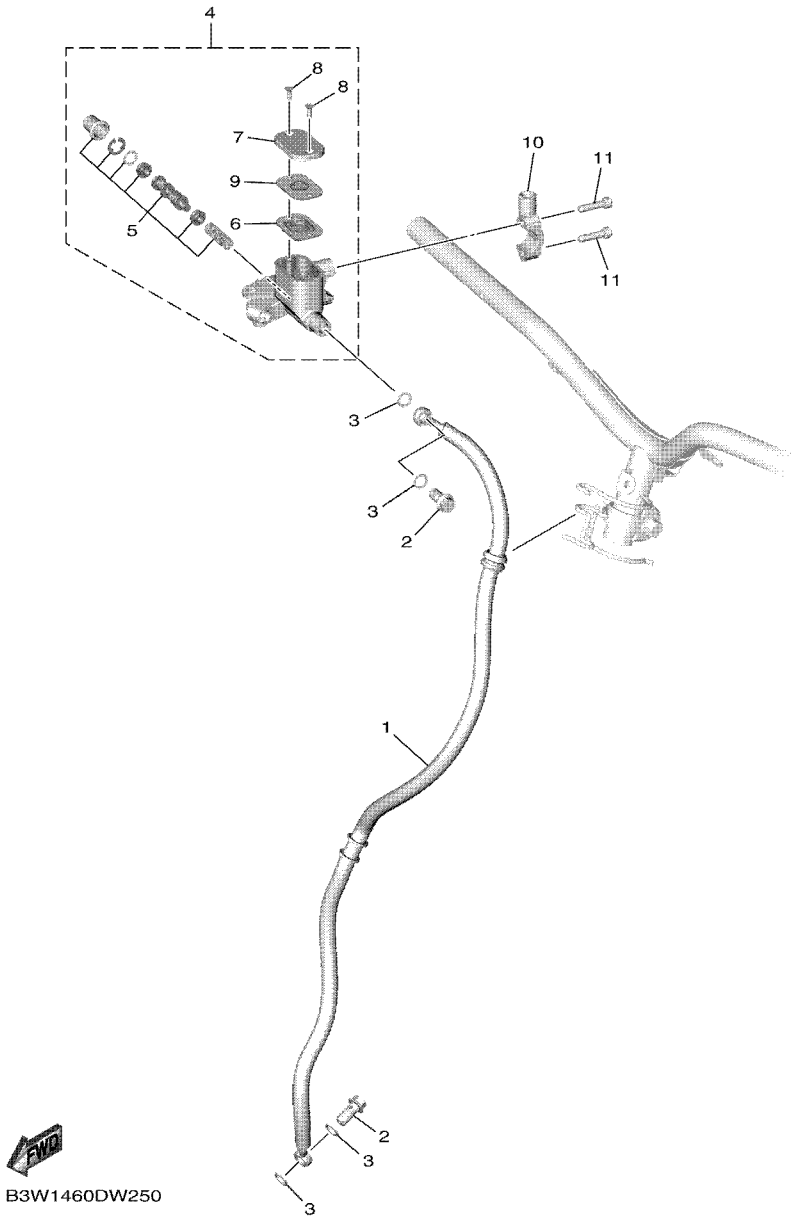

FIG. 25 FRONT MASTER CYLINDER

REF. NO.	PART NO.	DESCRIPTION	BES2					REMARKS
1	2SX–F5872–00	HOSE, BRAKE 1	1					
2	90401–10015	BOLT, UNION	2					
3	90201–10118	WASHER, PLATE	4					
4	5P0–F5807–00	MASTER CYLINDER SUB ASSY	1					
5	5P0–F580A–00	.CYLINDER KIT, MASTER	1					
6	5P0–F5854–00	.DIAPHRAGM, RESERVOIR	1					
7	5P0–F5852–00	.CAP, RESERVOIR	1					
8	36Y–2589H–00	.SCREW	2					
9	5P0–F5855–00	.BUSH,DIAPHRAGM	1					
10	B5D–F5867–00	BRACKET, MASTER CYLINDER	1					
11	91332–06025	BOLT	2					

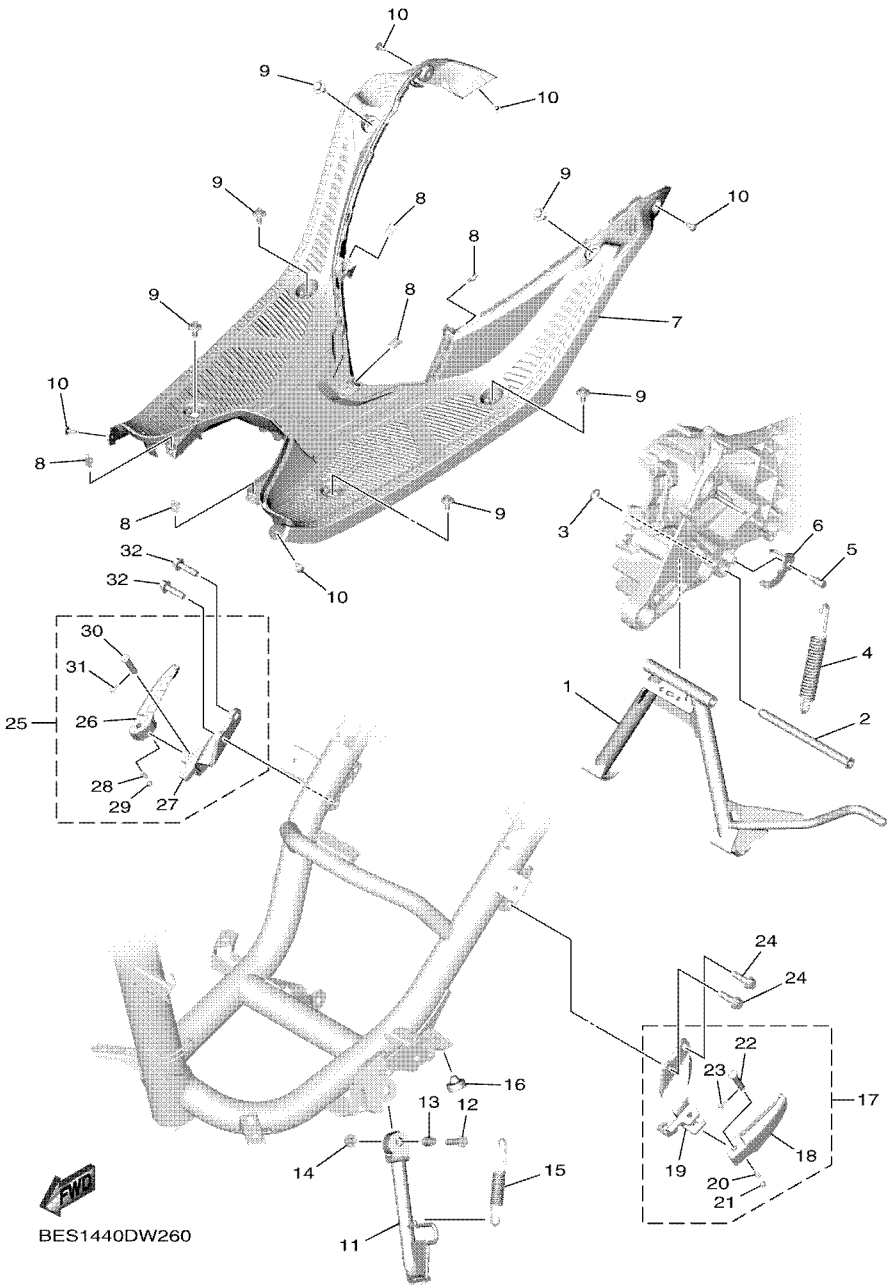

FIG. 26 STAND & FOOTREST

REF. NO.	PART NO.	DESCRIPTION	BES2					REMARKS
1	BES–F7111–00	STAND, MAIN	1					
2	2PH–F7112–00	SHAFT, MAIN STAND	1					
3	99002–09600	CIRCLIP	1					
4	90506–35821	SPRING, TENSION	1					
5	5LW–F7254–00	HOOK	1					
6	B92–F7267–00	GUIDE, WIRE	1					
7	BES–F7481–00	BOARD, FOOTREST	1					
8	90183–05807	NUT, SPRING	5					
9	90109–068B5	BOLT	6					
10	97707–50012	SCREW, TRUSS HEAD TAPPING	9					
11	BES–F7311–00	STAND, SIDE	1					
12	90101–08847	BOLT	1					
13	90387–08820	COLLAR	1					
14	95602–08200	NUT, U FLANGE	1					
15	90506–20514	SPRING, TENSION	1					
16	B92–F6257–00	STOPPER	1					
17	BES–F7430–00	REAR FOOTREST ASSY 1	1					
18	BES–F7431–00	.FOOTREST, REAR 1	1					
19	B92–F7432–00	.BRACKET 1	1					
20	90501–12743	.SPRING, COMPRESSION	1					
21	93501–04823	.BALL	1					
22	91701–08035	.PIN	1					
23	91401–25015	.PIN, COTTER	1					
24	95D02–08030	BOLT, FLANGE DEEP RECESS	2					
25	BES–F7440–00	REAR FOOTREST ASSY 2	1					
26	BES–F7441–00	.FOOTREST, REAR 2	1					
27	B92–F7442–00	.BRACKET 2	1					

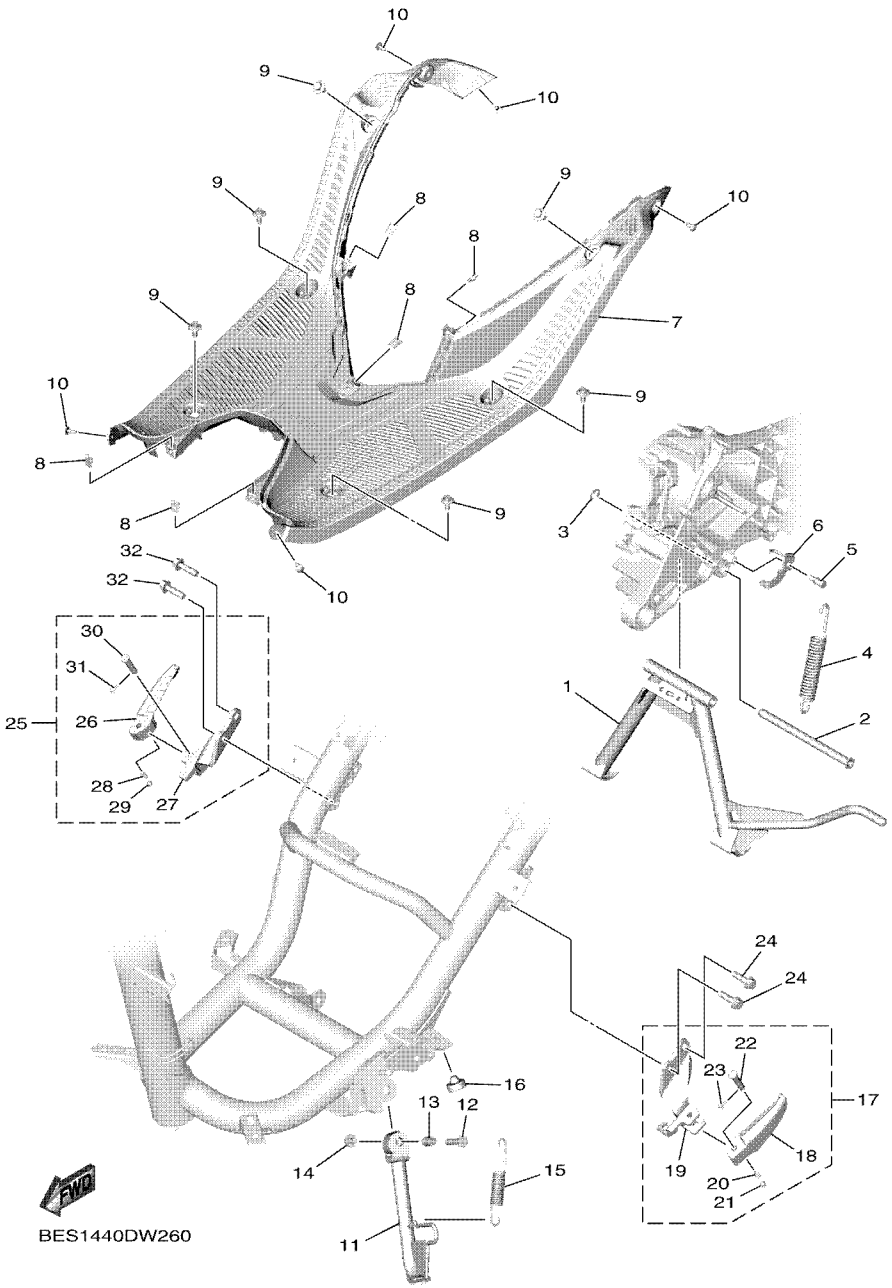

FIG. 26 STAND & FOOTREST

REF. NO.	PART NO.	DESCRIPTION	BES2					REMARKS
28	90501–12743	.SPRING, COMPRESSION	1					
29	93501–04823	.BALL	1					
30	91701–08035	.PIN	1					
31	91401–25015	.PIN, COTTER	1					
32	95D02–08030	BOLT, FLANGE DEEP RECESS	2					

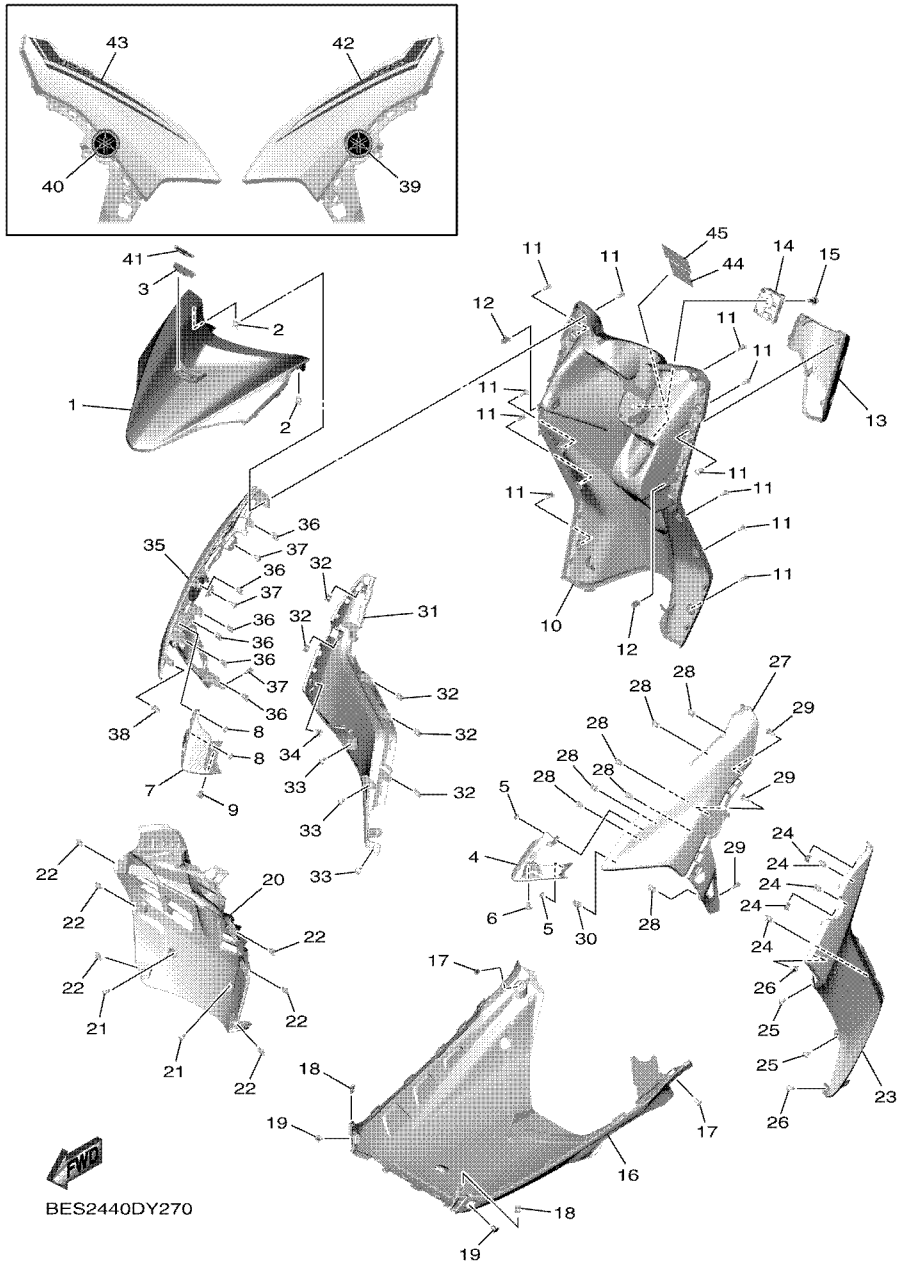

FIG. 27 LEG SHIELD

REF. NO.	PART NO.	DESCRIPTION	BES2					REMARKS
1	B3W–F8311–01	LEG SHIELD 1	1					
2	90183–05807	NUT, SPRING	2					
3	BB3–F8309–00	GRILLE, FRONT	1					
4	BES–F838D–01	COVER, HEADLIGHT 1	1					
5	90183–04005	NUT, SPRING	2					
6	90269–06816	RIVET	1					
7	BES–F838S–01	COVER, HEADLIGHT 2	1					
8	90183–04005	NUT, SPRING	2					
9	90269–06816	RIVET	1					
10	BES–F8312–01	LEG SHIELD 2	1					
11	97707–50016	SCREW, TRUSS HEAD TAPPING	14					
12	90464–07018	CLAMP	2					
13	BES–F836K–01	PANEL, INNER 1	1					
14	2BM–F8379–00	HOOK	1					
15	90109–06265	BOLT	1					
16	BES–F8385–01	COVER, LOWER	1					
17	97707–50012	SCREW, TRUSS HEAD TAPPING	2					
18	90183–05807	NUT, SPRING	2					
19	90269–06816	RIVET	2					
20	BES–F1552–01	FENDER, INNER	1					
21	97707–50012	SCREW, TRUSS HEAD TAPPING	2					
22	90183–05807	NUT, SPRING	6					
23	BES–F8345–01	MOLE 1	1					
24	90183–05807	NUT, SPRING	5					
25	97707–50012	SCREW, TRUSS HEAD TAPPING	3					
26	90464–04801	CLAMP	1					
27	BES–F835U–00–WN	PANEL 1	1					UR FOR LCM4

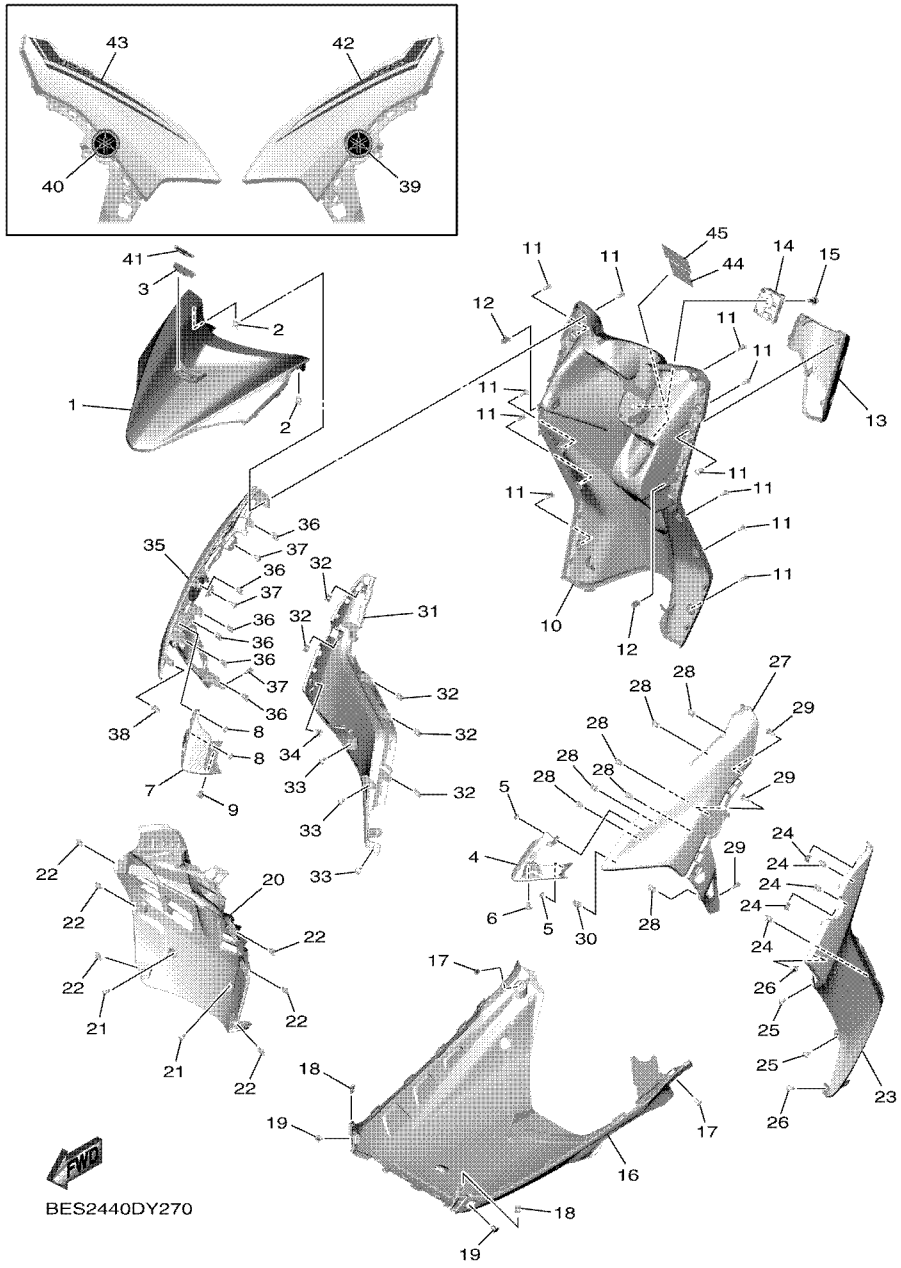

FIG. 27 LEG SHIELD

REF. NO.	PART NO.	DESCRIPTION	BES2					REMARKS
27	BES–F835U–00–P3	PANEL 1	1					UR FOR LLGS6
	BES–F835U–00–P4	PANEL 1	1					UR FOR DNLGM1
28	90183–05807	NUT, SPRING	7					
29	97707–50016	SCREW, TRUSS HEAD TAPPING	3					
30	90464–07018	CLAMP	1					
31	BES–F8346–01	MOLE 2	1					
32	90183–05807	NUT, SPRING	5					
33	97707–50012	SCREW, TRUSS HEAD TAPPING	3					
34	90464–04801	CLAMP	1					
35	BES–F835V–00–WN	PANEL 2	1					UR FOR LCM4
	BES–F835V–00–P3	PANEL 2	1					UR FOR LLGS6
	BES–F835V–00–P4	PANEL 2	1					UR FOR DNLGM1
36	90183–05807	NUT, SPRING	7					
37	97707–50016	SCREW, TRUSS HEAD TAPPING	3					
38	90464–07018	CLAMP	1					
39	5P2–F839B–00	EMBLEM 3D	1					
40	5P2–F839B–00	EMBLEM 3D	1					
41	BJN–F83E1–00	EMBLEM 3	1					
42	BES–F8391–30	GRAPHIC 1	1					UR FOR LCM4
	BES–F8391–40	GRAPHIC 1	1					UR FOR LLGS6
	BES–F8391–50	GRAPHIC 1	1					UR FOR DNLGM1
43	BES–F8392–30	GRAPHIC 2	1					UR FOR LCM4
	BES–F8392–40	GRAPHIC 2	1					UR FOR LLGS6
	BES–F8392–50	GRAPHIC 2	1					UR FOR DNLGM1
44	BF4–F1568–00	LABEL, WARNING	1					
45	B92–F1668–00	LABEL, TIRE	1					

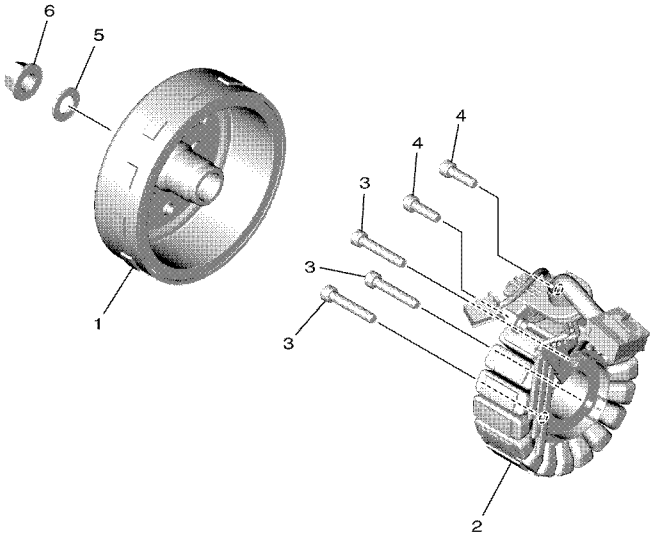

B3W1460DW280

FIG. 28 GENERATOR

REF. NO.	PART NO.	DESCRIPTION	BES2					REMARKS
1	B5D–H1450–00	ROTOR ASSY	1					
2	B5D–H1410–11	STATOR ASSY	1					
3	91332–06035	BOLT	3					
4	91332–06020	BOLT	2					
5	90201–12823	WASHER, PLATE	1					
6	90179–12004	NUT	1					

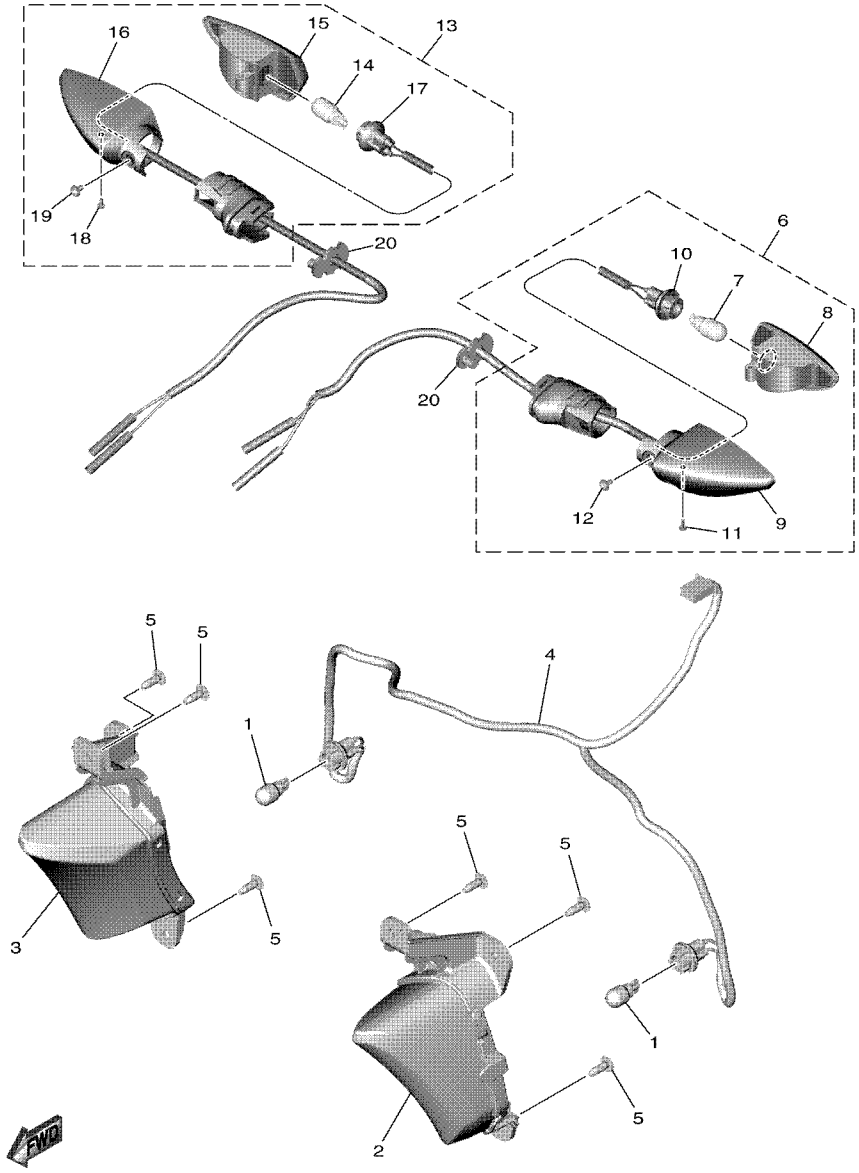

BES1440DW290

FIG. 29 FLASHER LIGHT

REF. NO.	PART NO.	DESCRIPTION	BES2					REMARKS
1	55D–H3311–00	BULB, FLASHER (12V-10W)	2					
2	BES–H3310–00	FRONT FLASHER LIGHT ASSY 1	1					
3	BES–H3320–00	FRONT FLASHER LIGHT ASSY 2	1					
4	BES–H331E–00	CORD ASSY	1					
5	97707–50016	SCREW, TRUSS HEAD TAPPING	6					
6	55D–H3330–01	REAR FLASHER LIGHT ASSY 1	1					
7	55D–H3311–00	.BULB, FLASHER (12V-10W)	1					
8	55D–H333A–00	.LENS COMP 1	1					
9	55D–H3323–00	.BODY	1					
10	55D–H333E–01	.CORD ASSY	1					
11	55D–H3333–00	.SCREW, LENS FITTING	1					
12	55D–H3358–00	.SCREW, SPECIAL	1					
13	55D–H3340–01	REAR FLASHER LIGHT ASSY 2	1					
14	55D–H3311–00	.BULB, FLASHER (12V-10W)	1					
15	55D–H334A–00	.LENS COMP 2	1					
16	55D–H332M–00	.BODY 2	1					
17	55D–H334E–01	.CORD ASSY	1					
18	55D–H3333–00	.SCREW, LENS FITTING	1					
19	55D–H3358–00	.SCREW, SPECIAL	1					
20	1VP–H3318–00	STAY, FLASHER 1	2					

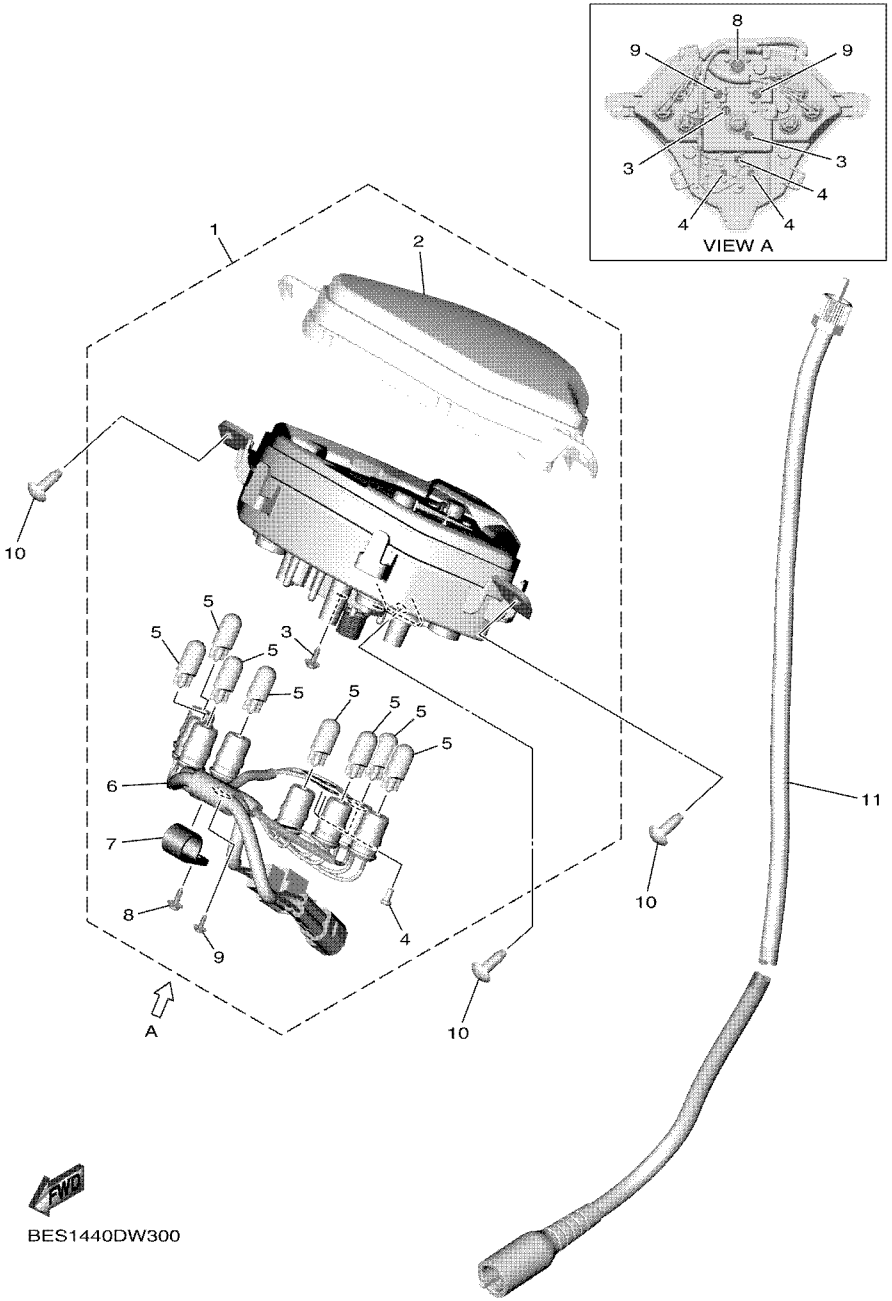

FIG. 30 METER

REF. NO.	PART NO.	DESCRIPTION	BES2					REMARKS
1	BES–H3510–00	SPEEDOMETER ASSY	1					
2	BES–H3511–00	.LENS, SPEEDOMETER	1					
3	1VP–H3358–00	.SCREW, SPECIAL	2					
4	1VP–H3645–00	.SCREW	3					
5	5LW–H3518–00	.BULB, METER (T10 12V-1.7W)	8					
6	BES–H3509–00	.SOCKET CORD ASSY	1					
7	1VP–H357E–00	.CLAMP	1					
8	97702–40012	.SCREW, TAPPING	1					
9	1VB–H652Y–00	.SCREW	2					
10	97707–50016	SCREW, TRUSS HEAD TAPPING	3					
11	2BR–H3550–00	SPEEDOMETER CABLE ASSY	1					

FIG. 31 HEADLIGHT

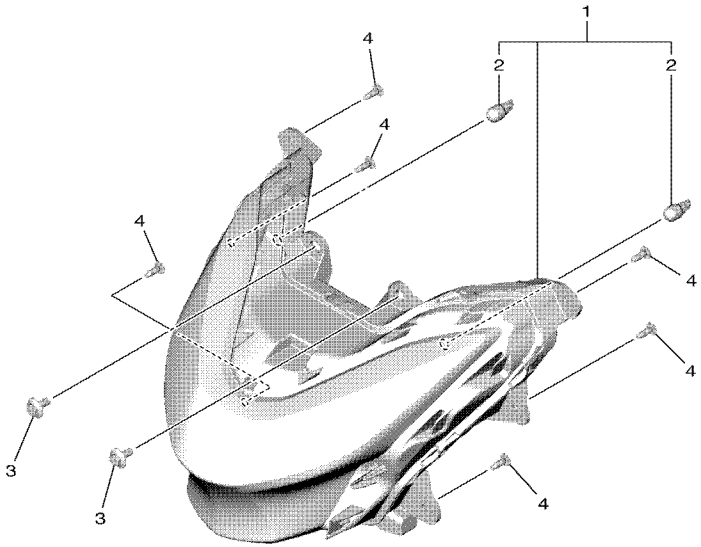

B3W1460DW310

REF. NO.	PART NO.	DESCRIPTION	BES2					REMARKS
1	BES–H4300–00	HEADLIGHT ASSY	1					
2	31B–H5353–00	.BULB (12V-5W)	2					
3	90109–068B5	BOLT	2					
4	97707–50016	SCREW, TRUSS HEAD TAPPING	6					

FIG. 32 TAILLIGHT

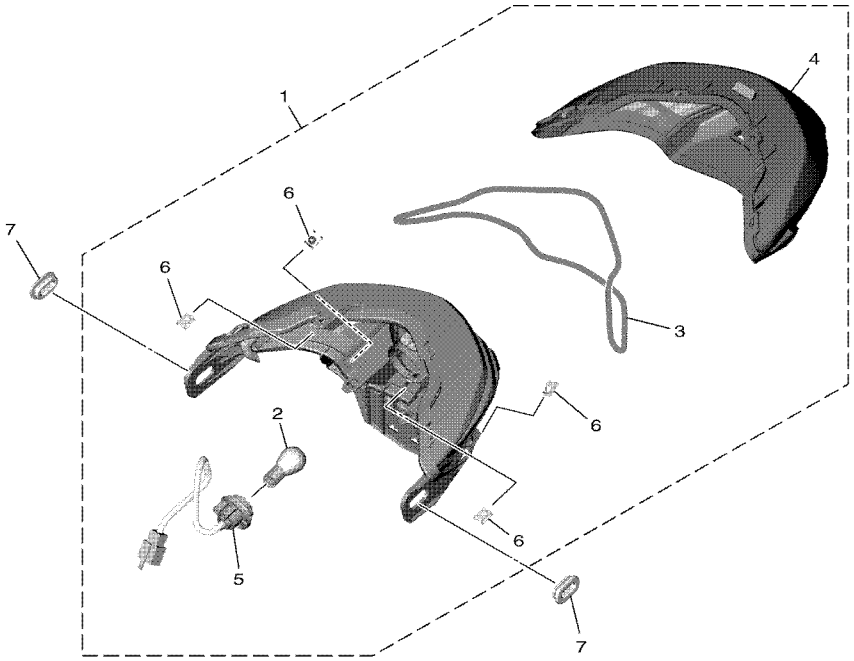

BES1440DW320

REF. NO.	PART NO.	DESCRIPTION	BES2					REMARKS
1	BES–H4710–00	TAILLIGHT UNIT ASSY	1					
2	1VP–H4714–00	.BULB, TAILLIGHT (12V-21/5W)	1					
3	BES–H4723–00	.GASKET, TAIL LENS	1					
4	BES–H4721–00	.LENS, TAILLIGHT	1					
5	BES–H4735–00	.SOCKET CORD ASSY	1					
6	90183–05807	.NUT, SPRING	4					
7	BES–H4759–00	GROMMET	2					

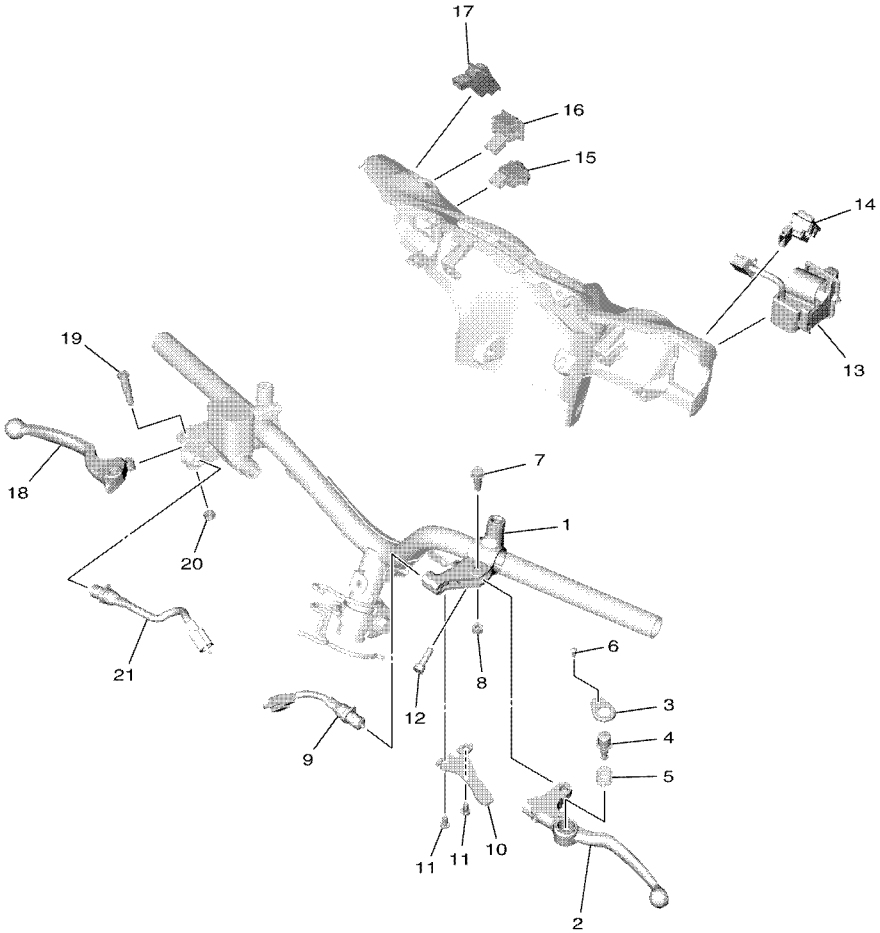

BES1440DW330

FIG. 33 HANDLE SWITCH & LEVER

REF. NO.	PART NO.	DESCRIPTION	BES2					REMARKS
1	1LB–H2911–20	HOLDER, LEVER 1	1					
2	1LB–H3912–00	LEVER 1	1					
3	1LB–H3935–00	COVER	1					
4	1LB–H3967–00	PIN, LOCK 1	1					
5	40D–H3962–00	SPRING	1					
6	40D–H396X–00	SCREW, LEVER FITTING	1					
7	90109–06798	BOLT	1					
8	95602–06100	NUT, SELF-LOCKING	1					
9	1LB–H3980–00	FRONT STOP SWITCH ASSY	1					
10	1LB–H2556–00	DAMPER, STOPPER	1					
11	98502–05010	SCREW, PAN HEAD	2					
12	91332–06020	BOLT	1					
13	B5D–H3975–00	SWITCH, HANDLE 2	1					
14	B5D–H276A–00	DIMMER SWITCH COMP.	1					
15	B5D–H279A–00	STARTER SWITCH COMP.	1					
16	B5D–H3362–00	HAZARD FLASHER SWITCH	1					
17	B5D–H277A–00	IDELE STOP SW.COMP	1					
18	5TL–H3922–00	LEVER 2	1					
19	90109–06255	BOLT	1					
20	95602–06100	NUT, SELF-LOCKING	1					
21	54P–H3980–00	FRONT STOP SWITCH ASSY	1					

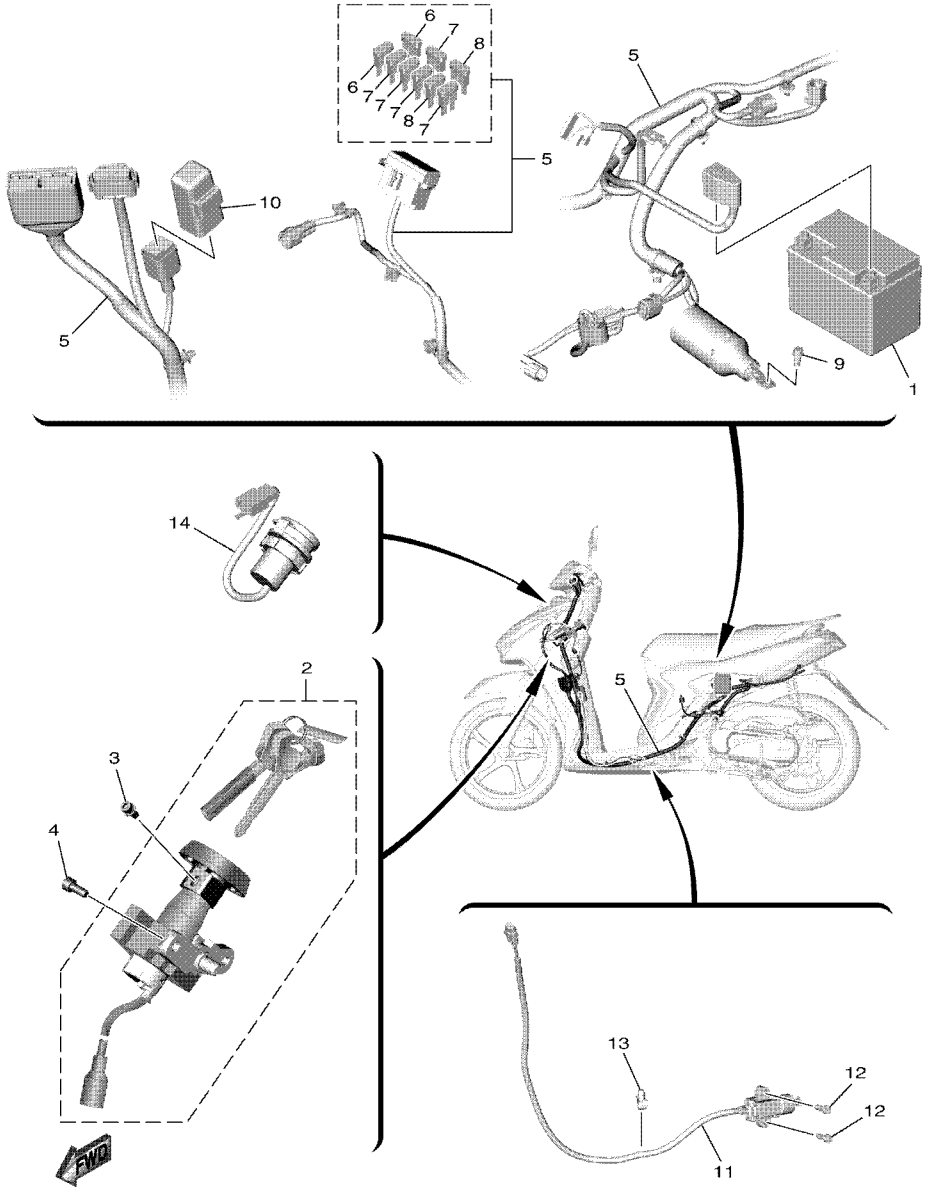

BES1440DW340

FIG. 34 ELECTRICAL 1

REF. NO.	PART NO.	DESCRIPTION	BES2					REMARKS
1	BBM–H2100–00	BATTERY ASSY (YUASA YTZ6V)	1					
2	BES–XH250–00	MAIN SW. STRG. LOCK SUB ASSY	1					
3	97602–05208	SCREW, PAN HEAD WITH WASHER	1					
4	90111–06162	BOLT, HEXAGON SOCKET BUTTON	2					
5	BES–H2590–00	WIRE HARNESS ASSY	1					
6	BAX–H2151–90	.FUSE (5A)	2					
7	BES–H2151–00	.FUSE (7.5A)	5					
8	BAX–H2151–20	.FUSE (20A)	2					
9	95E32–06012	BOLT, FLANGE DEEP RECESS	1					
10	5TP–H1940–00	STARTER RELAY ASSY	1					
11	1LB–H2566–01	SWITCH, SIDE STAND	1					
12	91312–05016	BOLT, HEXAGON SOCKET HEAD	2					
13	90464–07805	CLAMP	1					
14	B6H–H254B–00	TERMINAL COMP.	1					

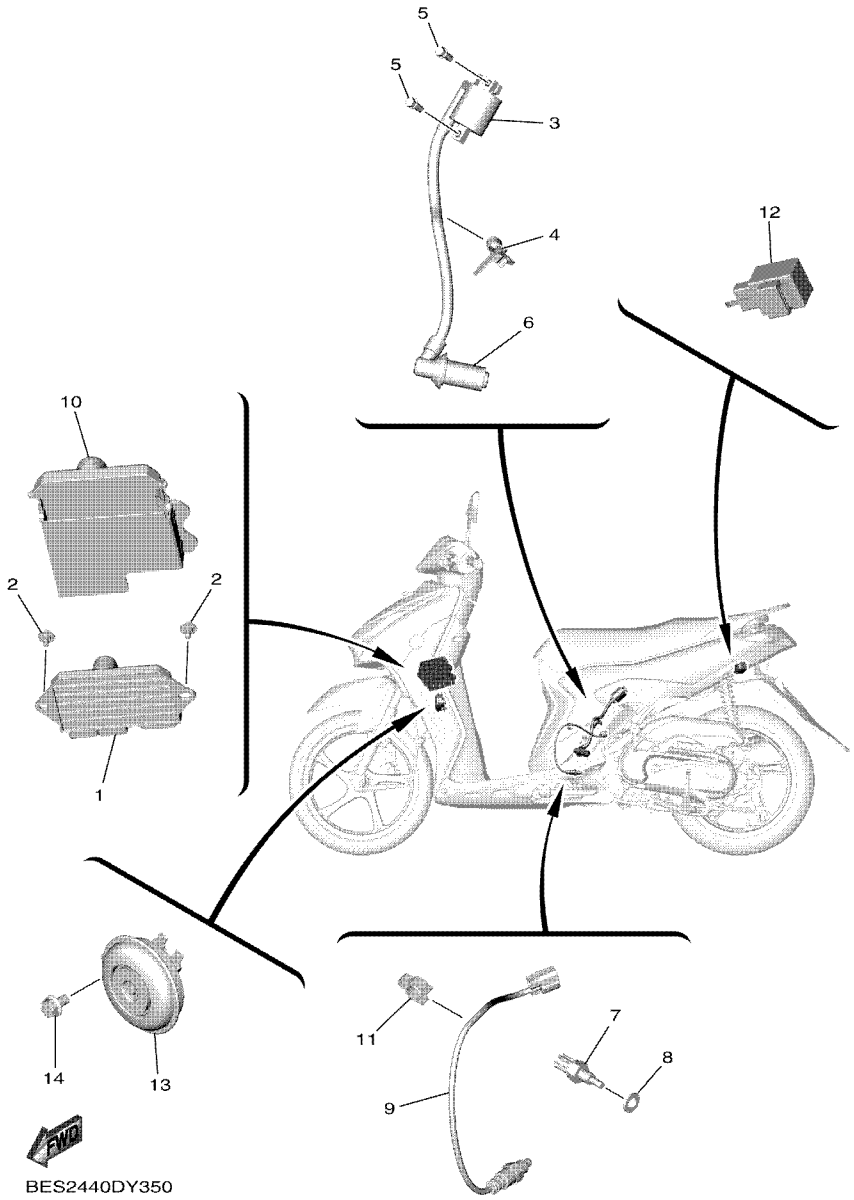

FIG. 35 ELECTRICAL 2

REF. NO.	PART NO.	DESCRIPTION	BES2					REMARKS
1	B3W–H594A–10	STARTER GEN. CONT. UNIT ASSY	1					
2	90109–068B4	BOLT	2					
3	2PH–H2310–01	IGNITION COIL ASSY	1					
4	90464–12810	CLAMP	1					
5	95E32–06016	BOLT, FLANGE DEEP RECESS	2					
6	2PH–H2370–10	PLUG CAP ASSY	1					
7	52B–H3591–00	THERMO UNIT	1					
8	90430–10806	GASKET	1					
9	2DP–H592A–20	SENSOR, OXYGEN	1					
10	B3W–H246B–00	COVER 1	1					
11	90464–16807	CLAMP	1					
12	3XV–83350–22	FLASHER RELAY ASSY	1					
13	2PH–H3371–00	HORN	1					
14	95D02–06010	BOLT, FLANGE DEEP RECESS	1					

PART NO.	REF. NO.
1PM–14216–00	7 – 19
36Y–2589H–00	25 – 8
3XV–83350–22	35 – 12
BES–E1102–00	1 – 1
B7J–E111F–00	4 – 4
2PH–E112F–00	4 – 5
1DR–E1133–10	1 – 2
B5D–E1166–00	7 – 37
2TS–E1181–00	1 – 12
B5D–E1191–01	1 – 7
B5D–E1193–00	1 – 9
2PH–E1311–10	1 – 16
B5D–E1351–00	1 – 17
BES–E1400–00	2 – 1
B5D–E1422–00	2 – 5
2PH–E1603–10	2 – 13
2PH–E1631–00	2 – 10
2PH–E1633–00	2 – 11
2PH–E1651–20	2 – 4
2BM–E1681–10	2 – 2
2PH–E2111–00	3 – 1
B5D–E2113–10	3 – 4
2DP–E2117–00	3 – 6
B63–E2117–01	3 – 6
5TL–E2118–00	3 – 5
54P–E2119–00	3 – 3
B5D–E2121–00	3 – 2
50C–E2126–00	3 – 7
2PH–E2146–00	3 – 11
2PH–E2151–02	3 – 8
B5D–E2157–00	4 – 16
33S–E2159–01	3 – 10
BES–E2170–00	4 – 1
B5D–E2176–00	4 – 8
2PV–E2210–01	4 – 12
B5D–E2213–00	4 – 14
5MX–E2222–00	4 – 13
54P–E2231–00	4 – 10
B5D–E2241–00	4 – 11
2PH–E2611–10	6 – 10
B5D–E2651–00	6 – 1
B5D–E2652–00	6 – 3
B5D–E2653–01	6 – 4
B5D–E2658–00	6 – 2
B5D–E2659–00	6 – 6
B5D–E2668–00	6 – 7
2PH–E3300–10	5 – 1
B5D–E3324–00	2 – 8

PART NO.	REF. NO.
1GC–E3411–00	5 – 5
5LW–E3452–00	2 – 6
BF4–E3475–00	5 – 2
B5D–E3556–00	7 – 3
B5D–E3557–00	7 – 14
5LW–E3569–00	6 – 12
2PH–E3585–10	7 – 1
2PH–E3593–01	7 – 5
2PH–E3595–00	7 – 2
B5D–E3750–01	7 – 17
2PH–E3761–10	7 – 9
5LW–E3769–00	9 – 20
2PH–E3770–10	7 – 8
B3W–E3907–11	19 – 5
54P–E3915–00	19 – 6
54P–E3938–00	7 – 12
2PH–E3971–02	19 – 4
54P–E4137–00	7 – 13
2PH–E4146–00	7 – 20
54P–E4147–00	7 – 10
5CA–E4147–00	7 – 11
B5D–E4411–00	7 – 21
B5D–E4412–00	7 – 22
2PH–E4437–00	7 – 23
4ST–E443E–00	10 – 4
5TL–E443E–00	7 – 30
B5D–E443G–00	7 – 27
B5D–E4450–00	7 – 24
B5D–E4452–10	7 – 26
B5D–E4453–00	7 – 25
B92–E4613–00	8 – 4
BES–E4711–00	8 – 1
BES–E4718–00	8 – 2
BES–E5150–00	9 – 1
2PH–E5155–01	9 – 2
B5D–E5191–00	10 – 7
54P–E5351–01	5 – 4
B5D–E5362–00	9 – 19
5LW–E5363–00	9 – 17
54P–E5371–00	9 – 6
	10 – 3
2SX–E5373–00	9 – 7
2PH–E5407–00	10 – 14
BES–E5411–00	10 – 1
B5D–E5413–00	10 – 17
B5D–E5417–10	9 – 21
BES–E5421–00	9 – 31
B5D–E5421–01	9 – 31

PART NO.	REF. NO.
B5D–E5451–00	10 – 2
B5D–E5453–00	9 – 25
B5D–E5461–00	9 – 32
B5D–E5463–10	9 – 26
B3W–E5471–00	10 – 11
B5D–E5472–00	10 – 13
B5D–E5601–00	11 – 1
2BL–E5620–10	11 – 7
B5D–E5630–00	11 – 9
5MX–E5657–00	12 – 36
B5D–E5659–00	10 – 6
5MX–E5673–00	11 – 10
2DP–E5744–00	12 – 27
2PH–E6111–00	12 – 1
2PH–E6111–10	12 – 1
2DP–E6523–00	12 – 13
2SX–E6611–00	12 – 29
2SX–E6620–10	12 – 11
2DS–E6626–00	12 – 12
54P–E6819–00	12 – 14
2PH–E7211–20	13 – 5
2PH–E7211–30	13 – 5
2PH–E7211–40	13 – 5
B5D–E7410–00	13 – 1
B5D–E7410–10	13 – 1
B5D–E7410–20	13 – 1
B5D–E7410–30	13 – 1
B5D–E7410–40	13 – 1
B5D–E7421–00	13 – 4
2SX–E7465–00	12 – 17
2SX–E7465–20	12 – 19
2SX–E7465–30	12 – 18
44D–E7611–00	12 – 10
2SX–E7620–00	12 – 5
2SX–E7623–10	12 – 7
2PH–E7632–20	12 – 6
2PH–E7641–00	12 – 30
2SX–E7644–10	12 – 24
2SX–E7653–00	12 – 8
2SX–E7660–10	12 – 15
2DP–E7664–00	12 – 20
2DP–E7668–00	12 – 25
2SX–E7670–00	12 – 16
54P–E7674–00	12 – 9
2DP–E7674–10	12 – 21
2DP–E7678–00	12 – 26
2DP–E7678–10	12 – 28
2SX–E7683–10	12 – 22

PART NO.	REF. NO.
2SX–E7684–00	12 – 23
BES–F1110–00	14 – 1
BES–F1161–00	18 – 34
BES–F1288–00	14 – 14
2PH–F1410–20	14 – 3
54P–F1459–00	14 – 5
BJ7–F1459–00	14 – 5
BES–F1511–00–P3	15 – 1
BES–F1511–00–P4	15 – 1
BES–F1511–00–P5	15 – 1
15K–F1518–00	15 – 3
BES–F1552–01	27 – 20
BF4–F1568–00	27 – 44
BES–F1611–00	15 – 4
BES–F1621–00	15 – 6
B92–F1668–00	27 – 45
BES–F1711–00–P3	16 – 3
BES–F1711–00–P4	16 – 3
BES–F1711–00–WN	16 – 3
BES–F1716–01	16 – 23
BES–F171E–00	16 – 21
BES–F1721–00–P3	16 – 9
BES–F1721–00–P4	16 – 9
BES–F1721–00–WN	16 – 9
BES–F1726–01	16 – 26
BES–F172W–01	16 – 1
BES–F1731–01	16 – 15
B92–F1737–00	24 – 30
BES–F173E–30	16 – 29
BES–F173E–40	16 – 29
BES–F173E–50	16 – 29
BES–F173F–30	16 – 30
BES–F173F–40	16 – 30
BES–F173F–50	16 – 30
BES–F1741–01	16 – 18
BES–F174G–30	16 – 31
BES–F174G–40	16 – 31
BES–F174G–50	16 – 31
BES–F174H–30	16 – 32
BES–F174H–40	16 – 32
BES–F174H–50	16 – 32
54P–F2141–00	14 – 8
10C–F2210–30	17 – 1
B92–F3100–00	18 – 1
B92–F3110–00	18 – 8
1FC–F3111–10	18 – 19
B92–F3126–00	18 – 5
B92–F3136–00	18 – 2

PART NO.	REF. NO.
B92–F3141–00	18 – 15
5LL–F3144–00	18 – 14
4UV–F3145–00	18 – 3
	18 – 6
2JG–F3147–00	18 – 20
5TF–F3152–00	18 – 11
31D–F3153–00	18 – 21
5P0–F3156–00	18 – 4
	18 – 7
2JG–F3157–00	18 – 10
509–F3158–L0	18 – 12
B92–F3170–00	18 – 9
31D–F3181–50	18 – 13
B92–F3340–00	18 – 16
4D0–F3346–00	18 – 18
4FP–F3411–10	18 – 17
4RT–F3411–10	18 – 25
1KL–F3412–10	18 – 22
4RT–F3412–10	18 – 24
54P–F3415–00	18 – 28
2WB–F3416–00	18 – 27
1P6–F341E–10	18 – 26
5VL–F341E–10	18 – 23
B92–F4110–00	19 – 1
5D9–F414G–00	14 – 2
	19 – 2
B92–F414G–00	19 – 12
54P–F414G–10	19 – 8
BES–F41B1–01	19 – 11
B92–F4491–00	19 – 9
4YY–F4610–00	19 – 16
4YY–F4612–00	19 – 17
BES–F470F–00	20 – 2
2WB–F4727–00	20 – 12
B92–F472T–01	20 – 16
BES–F4730–00	20 – 1
BES–F473R–00	20 – 5
44P–F4741–00	20 – 3
4HF–F4741–00	20 – 4
1S8–F4768–00	20 – 15
BES–F4773–00–33	20 – 19
40D–F4780–01	20 – 13
2SX–F478E–10	20 – 17
1VB–F5168–00–0X	21 – 1
1VB–F5168–00–33	21 – 1
2SX–F5181–00	21 – 8
5TL–F5190–01	21 – 11
5LW–F530K–00	23 – 7

PART NO.	REF. NO.
54P–F5326–00	23 – 4
44P–F5338–00–0X	23 – 1
44P–F5338–00–33	23 – 1
5LW–F533A–00	23 – 12
10C–F5351–00	23 – 10
B92–F5355–00	23 – 11
2BM–F5802–00	22 – 4
5YP–F5803–50	22 – 5
2BM–F5805–00	22 – 9
5P0–F5807–00	25 – 4
5P0–F580A–00	25 – 5
2SX–F580U–10	22 – 3
BES–F582U–00	22 – 1
5P0–F5852–00	25 – 7
5P0–F5854–00	25 – 6
5P0–F5855–00	25 – 9
B5D–F5867–00	25 – 10
2SX–F5872–00	25 – 1
B92–F5875–00	18 – 30
B92–F5876–00	18 – 32
2BM–F5917–00	22 – 6
2BM–F5919–00	22 – 11
5YP–F5924–10	22 – 12
5YP–F5925–01	22 – 10
5YP–F5937–00	22 – 7
BES–F6110–00	24 – 1
BES–F6143–00–P3	24 – 5
BES–F6143–00–P4	24 – 5
BES–F6143–00–P5	24 – 5
BES–F6145–00	24 – 8
B92–F6240–00	24 – 11
1VP–F6241–00	24 – 12
B92–F6246–00	24 – 13
B92–F6257–00	24 – 21
	26 – 16
2WB–F6280–00	24 – 14
55D–F6281–00	24 – 27
55D–F6282–00	24 – 28
2WB–F6290–00	24 – 15
B3W–F6301–00	24 – 16
BES–F6301–00	24 – 16
B3W–F6301–10	24 – 16
2SX–F6351–00	24 – 19
B92–F637G–00	24 – 20
BES–F7111–00	26 – 1
2PH–F7112–00	26 – 2
2PH–F7114–00	14 – 6
1GC–F7121–00	9 – 3

PART NO.	REF. NO.
5LW–F7254–00	26 – 5
B92–F7267–00	26 – 6
BES–F7311–00	26 – 11
BES–F7430–00	26 – 17
BES–F7431–00	26 – 18
B92–F7432–00	26 – 19
BES–F7440–00	26 – 25
BES–F7441–00	26 – 26
B92–F7442–00	26 – 27
BES–F7481–00	26 – 7
BES–F8100–00	20 – 21
BB3–F8309–00	27 – 3
B3W–F8311–01	27 – 1
BES–F8312–01	27 – 10
BES–F8345–01	27 – 23
BES–F8346–01	27 – 31
BES–F8356–00	14 – 11
BES–F8358–00	14 – 16
BES–F835U–00–P3	27 – 27
BES–F835U–00–P4	27 – 27
BES–F835U–00–WN	27 – 27
BES–F835V–00–P3	27 – 35
BES–F835V–00–P4	27 – 35
BES–F835V–00–WN	27 – 35
BES–F836K–01	27 – 13
2BM–F8379–00	27 – 14
BES–F8385–01	27 – 16
BES–F838D–01	27 – 4
BES–F838S–01	27 – 7
BES–F8391–30	27 – 42
BES–F8391–40	27 – 42
BES–F8391–50	27 – 42
BES–F8392–30	27 – 43
BES–F8392–40	27 – 43
BES–F8392–50	27 – 43
5P2–F839B–00	27 – 39
	27 – 40
BJN–F83E1–00	27 – 41
B5D–H1410–11	28 – 2
B5D–H1450–00	28 – 1
5TP–H1940–00	34 – 10
BBM–H2100–00	34 – 1
BBY–H2126–00	19 – 13
BES–H2129–01	20 – 9
BES–H2151–00	34 – 7
BAX–H2151–20	34 – 8
BAX–H2151–90	34 – 6
1VB–H2176–00	20 – 6

PART NO.	REF. NO.
2PH–H2310–01	35 – 3
2PH–H2370–10	35 – 6
B3W–H246B–00	35 – 10
B6H–H254B–00	34 – 14
1LB–H2556–00	33 – 10
1LB–H2566–01	34 – 11
BES–H2590–00	34 – 5
B5D–H276A–00	33 – 14
B5D–H277A–00	33 – 17
B5D–H279A–00	33 – 15
1LB–H2911–20	33 – 1
BES–H3310–00	29 – 2
55D–H3311–00	29 – 1
	29 – 7
	29 – 14
1VP–H3318–00	29 – 20
BES–H331E–00	29 – 4
BES–H3320–00	29 – 3
55D–H3323–00	29 – 9
55D–H332M–00	29 – 16
55D–H3330–01	29 – 6
55D–H3333–00	29 – 11
	29 – 18
55D–H333A–00	29 – 8
55D–H333E–01	29 – 10
55D–H3340–01	29 – 13
55D–H334A–00	29 – 15
55D–H334E–01	29 – 17
1VP–H3358–00	30 – 3
55D–H3358–00	29 – 12
	29 – 19
B5D–H3362–00	33 – 16
2PH–H3371–00	35 – 13
BES–H3509–00	30 – 6
BES–H3510–00	30 – 1
BES–H3511–00	30 – 2
5LW–H3518–00	30 – 5
2BR–H3550–00	30 – 11
1VP–H357E–00	30 – 7
52B–H3591–00	35 – 7
1VP–H3645–00	30 – 4
1LB–H3912–00	33 – 2
5TL–H3922–00	33 – 18
1LB–H3935–00	33 – 3
40D–H3962–00	33 – 5
1LB–H3967–00	33 – 4
40D–H396X–00	33 – 6
B5D–H3975–00	33 – 13

PART NO.	REF. NO.
1LB–H3980–00	33 – 9
54P–H3980–00	33 – 21
BES–H4300–00	31 – 1
BES–H4710–00	32 – 1
1VP–H4714–00	32 – 2
BES–H4721–00	32 – 4
BES–H4723–00	32 – 3
BES–H4735–00	32 – 5
BES–H4759–00	32 – 7
2FC–H5111–00	15 – 9
55D–H5130–00	15 – 11
BE1–H5130–00	15 – 11
31B–H5353–00	31 – 2
2PH–H5752–00	19 – 7
B5D–H5885–01	7 – 18
2DP–H592A–20	35 – 9
B3W–H594A–10	35 – 1
1VB–H652Y–00	30 – 9
4C9–W0048–00	22 – 8
BES–XH250–00	34 – 2
90101–06046	23 – 14
90101–08847	26 – 12
90105–07802	4 – 7
90105–088H4	17 – 2
90105–10831	22 – 13
90105–10896	24 – 3
90105–108B2	14 – 7
90109–06255	33 – 19
90109–06265	27 – 15
90109–06798	33 – 7
90109–068B4	20 – 7
	35 – 2
90109–068B5	14 – 15
	15 – 2
	15 – 5
	26 – 9
	31 – 3
90110–06846	7 – 16
90110–06868	1 – 15
90110–06887	6 – 11
90111–06162	34 – 4
90111–06811	8 – 3
90111–08853	22 – 2
90116–08843	9 – 12
90119–06155	19 – 3
90159–06810	16 – 22
90170–05803	3 – 9
90170–08810	1 – 10

PART NO.	REF. NO.
90170–12800	12 – 38
90170–12803	12 – 34
90179–06411	24 – 25
90179–12004	28 – 6
90179–25812	18 – 29
90183–04005	16 – 8
	16 – 14
	27 – 5
	27 – 8
90183–05807	15 – 7
	16 – 7
	16 – 13
	16 – 17
	16 – 20
	16 – 24
	16 – 27
	20 – 8
	24 – 2
	24 – 6
	24 – 10
	26 – 8
	27 – 2
	27 – 18
	27 – 22
	27 – 24
	27 – 28
	27 – 32
	27 – 36
	32 – 6
90185–05803	15 – 10
90185–10011	24 – 4
90185–10012	21 – 9
90185–16800	23 – 15
90201–10065	17 – 5
90201–10118	25 – 3
90201–10831	21 – 10
90201–12028	17 – 4
90201–12823	28 – 5
90201–154E8	11 – 4
90201–15845	12 – 39
90201–16810	23 – 16
90201–16816	12 – 40
90201–220J8	23 – 17
90206–14093	23 – 13
90208–12808	12 – 37
90249–12008	24 – 26
90269–06816	19 – 15
	24 – 7

PART NO.	REF. NO.
90269–06816	27 – 6
	27 – 9
	27 – 19
90280–03017	2 – 9
90340–12816	9 – 13
90380–10803	12 – 32
90380–15809	11 – 3
90387–05820	16 – 5
	16 – 11
90387–068T2	7 – 31
90387–08820	26 – 13
90387–10277	21 – 7
90387–16819	12 – 35
90388–08803	9 – 4
90388–10800	14 – 4
90388–10805	9 – 5
90401–10015	25 – 2
90430–06803	1 – 5
90430–08804	9 – 16
90430–10806	35 – 8
90430–12803	9 – 14
90450–46803	7 – 35
90464–04801	16 – 25
	16 – 28
	27 – 26
	27 – 34
90464–07018	27 – 12
	27 – 30
	27 – 38
90464–07805	34 – 13
90464–12810	35 – 4
90464–16807	35 – 11
90467–10008	9 – 8
90467–110A3	10 – 5
90467–12807	7 – 28
90467–13808	7 – 38
90467–13858	7 – 39
90480–10003	15 – 8
90480–13013	7 – 32
90480–14004	14 – 12
90501–12743	26 – 20
	26 – 28
90501–16003	24 – 24
90501–16004	5 – 6
90506–12001	23 – 8
90506–15001	23 – 9
90506–20514	26 – 15
90506–35821	26 – 4

PART NO.	REF. NO.
90508–32768	11 – 2
90520–02806	14 – 18
90520–03806	20 – 10
90520–04812	6 – 13
90520–05819	6 – 5
90520–08812	19 – 18
90520–10832	7 – 34
90520–10834	10 – 12
90520–10851	7 – 33
90560–10292	21 – 2
91312–05016	34 – 12
91312–06012	4 – 6
91312–06025	11 – 8
91332–05010	19 – 10
91332–06020	28 – 4
	33 – 12
91332–06025	25 – 11
91332–06035	28 – 3
91401–25015	26 – 23
	26 – 31
91701–08035	26 – 22
	26 – 30
91A20–07065	19 – 14
92012–05010	24 – 18
92012–05016	24 – 17
92907–10600	14 – 10
93102–15801	11 – 6
93102–20815	12 – 4
93102–21800	9 – 23
93102–25824	9 – 30
93102–30805	13 – 7
93106–20808	21 – 3
93210–07802	23 – 6
93210–09806	4 – 2
93210–148H8	9 – 18
93210–15862	4 – 17
93210–29800	5 – 7
93210–35883	7 – 4
93211–07800	9 – 24
93306–001YG	4 – 3
93306–201YS	12 – 2
93306–204XX	12 – 3
93306–272YB	13 – 6
93306–300YF	21 – 4
93306–302YU	13 – 2
93306–303YU	13 – 9
93306–351Y8	13 – 3
93306–372X7	2 – 7

PART NO.	REF. NO.
93310–528YP	2 – 3
933A6–202Y0	12 – 31
93440–10153	1 – 3
93450–14088	2 – 12
93501–04823	26 – 21
	26 – 29
93900–00817	21 – 6
	23 – 3
94107–14808	21 – 5
94109–14804	23 – 2
94568–A6092	4 – 9
94700–00372	1 – 11
95302–10600	17 – 3
95602–06100	33 – 8
	33 – 20
95602–08200	26 – 14
95602–10200	14 – 9
95612–08618	1 – 6
95702–08500	8 – 5
95702–10500	23 – 5
95802–06012	14 – 13
95812–08045	9 – 15
95D02–06010	18 – 31
	18 – 35
	35 – 14
95D02–08030	26 – 24
	26 – 32
95D32–06010	14 – 17
95D32–06012	18 – 33
95D32–06020	10 – 15
	20 – 20
95D32–06025	7 – 15
	7 – 36
95D32–06030	1 – 8
95D32–06035	7 – 6
95D32–06045	7 – 7
95D32–06080	10 – 16
95D32–08055	8 – 6
95E32–06010	1 – 4
	10 – 8
	20 – 14
95E32–06012	34 – 9
95E32–06014	24 – 23
95E32–06016	35 – 5
95E32–06020	4 – 15
	6 – 8
	9 – 29
	10 – 19

PART NO.	REF. NO.
95E32–06035	9 – 34
	10 – 10
95E32–06040	24 – 22
95E32–06045	9 – 35
	10 – 18
95E32–06060	9 – 10
95E32–06070	9 – 28
95E32–06100	9 – 11
97602–05208	34 – 3
97702–40012	30 – 8
97702–60530	6 – 9
97707–50012	16 – 2
	16 – 6
	16 – 12
	16 – 16
	16 – 19
	20 – 11
	24 – 9
	26 – 10
	27 – 17
	27 – 21
	27 – 25
	27 – 33
97707–50016	16 – 4
	16 – 10
	27 – 11
	27 – 29
	27 – 37
	29 – 5
	30 – 10
	31 – 4
97707–50025	7 – 29
98502–05010	33 – 11
98502–05020	5 – 3
98502–05025	24 – 29
98507–05010	20 – 18
99002–09600	26 – 3
99009–15400	11 – 5
99009–25400	13 – 8
99009–35700	12 – 33
99237–00080	24 – 31
99480–03012	9 – 22
99480–05010	9 – 27
99530–10114	1 – 13
	1 – 14
	9 – 9
	9 – 33
	10 – 9