YAMAHA

# PARTS CATALOGUE

LLGS6

DNLGM1

LCM4

# LNP125 ( BES2 ) MALAYSIA

YAMAHA GENUINE Parts & Accessories

1YBES-440E1

(  )

LNP125
PARTS CATALOGUE
©2023 by Yamaha Motor Co., Ltd.
1st edition, December 2023
All rights reserved.
Any reprinting or unauthorized use
without the written permission of
Yamaha Motor Co., Ltd.
is expressly prohibited.
Printed in Japan.

# FOREWORD

This Parts Catalogue is related to the parts for the model(s) on the cover page. When you are ordering replacement parts, please refer to this Parts Catalogue and quote both part numbers and part names correctly.

1. Modifications or additions which have been made after the issue of the Parts Catalogue will be announced in the Parts News.
   It is advisable that you make the necessary corrections to the Parts Catalogue according to the Parts News.

2. Abbreviations
   The following abbreviations are used in this Parts Catalogue.

   "UR" Use specified parts number.

   "UN" Use as many as needed.

   "AP" Alternate Parts

   "LM" Locally Made (Parts need to be ordered locally)

   "F#" Frame No. (Applicable machine No.)

   "O/S" Over Size

3. The number of components for assembly
   - Parts, which are to be supplied in an assembly, are listed with a dot (.) in front of the part name as shown below.
   - The numeral appearing to the right of each component part indicates the quantity of parts for each assembly unit.

| PART NO. | DESCRIPTION | Q'TY | REMARKS |
|---|---|---|---|
| 2F5–83310–60 | FRONT FLASHER LIGHT ASSY | 2 | |
| 115–83311–60 | .BULB (6V–18W) | 1 | |

4. Applicable colours of graphics are represented in the "REMARKS" as shown below.

| PART NO. | DESCRIPTION | Q'TY | REMARKS |
|---|---|---|---|
| 2N4–24110–00–X5 | FUEL TANK COMP. | 2 | MXR |
| 3J1–24240–10 | .GRAPHIC, FUEL TANK | 1 | FOR MXR |

5. Note that the illustrations for reference in finding parts numbers are not to be used for assembling. When assembling, please use the applicable service manual.

6. The asterisk (*) before a reference number indicates modified items after the first edition.

7. Applicable Serial No.

Frame Serial No.

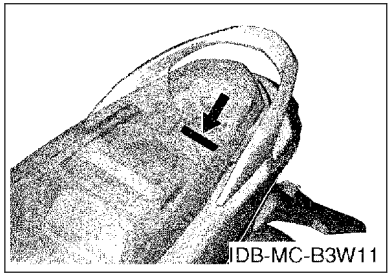


Engine Serial No.

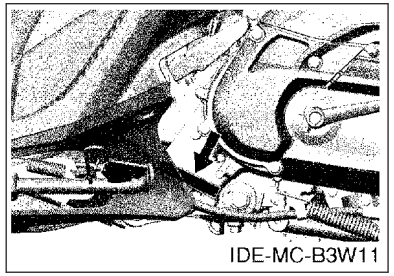


8. Applicable Colour Code (The (*) mark shows Model colour.)

| Abbreviation | Colour Name | Colour Code |
|---|---|---|
| CIS | CIRCUIT SILVER | 00WN |
| DNLGM1(*) | DARK GRAYISH LEAF GREEN ME 1 | 0699 |
| LCM4(*) | LIGHT CYAN METALLIC 4 | 1056 |
| LLGS6(*) | LIGHT LEAF GREEN SOLID 6 | 1510 |
| MBM3 | MAT BLUE METALLIC 3 | 0960 |
| YB | YAMAHA BLACK | 0033 |
| | | |
| | | |
| | | |
| | | |

9. Applicable Starting Serial No.

Frame Serial No.

| Serial No. | Name Of Q'ty Column | Model Code |
|---|---|---|
| | | |
| | | |
| | | |
| | | |
| | | |

Engine Serial No.

| Serial No. | Name Of Q'ty Column | Model Code |
|---|---|---|
| | | |
| | | |
| | | |
| | | |
| | | |

# CONTENTS

## ENGINE

CYLINDER.....1
CRANKSHAFT & PISTON.....2
VALVE.....3
CAMSHAFT & CHAIN.....4
OIL PUMP.....5
AIR SHROUD & FAN.....6
INTAKE.....7
EXHAUST.....9
CRANKCASE.....10
CRANKCASE COVER 1.....12
STARTER.....13
CLUTCH.....14
TRANSMISSION.....16

## CHASSIS

FRAME.....17
FENDER.....18
SIDE COVER.....19
REAR SUSPENSION.....21
STEERING.....22
FUEL TANK.....24
SEAT.....25
FRONT WHEEL.....26
FRONT BRAKE CALIPER.....27
REAR WHEEL.....28
STEERING HANDLE & CABLE.....29
FRONT MASTER CYLINDER.....31
STAND & FOOTREST.....32
LEG SHIELD.....34
GENERATOR.....36
FLASHER LIGHT.....37
METER.....38
HEADLIGHT.....39
TAILLIGHT.....40
HANDLE SWITCH & LEVER.....41
ELECTRICAL 1.....42
ELECTRICAL 2.....43

## INDEX

NUMERICAL INDEX.....44

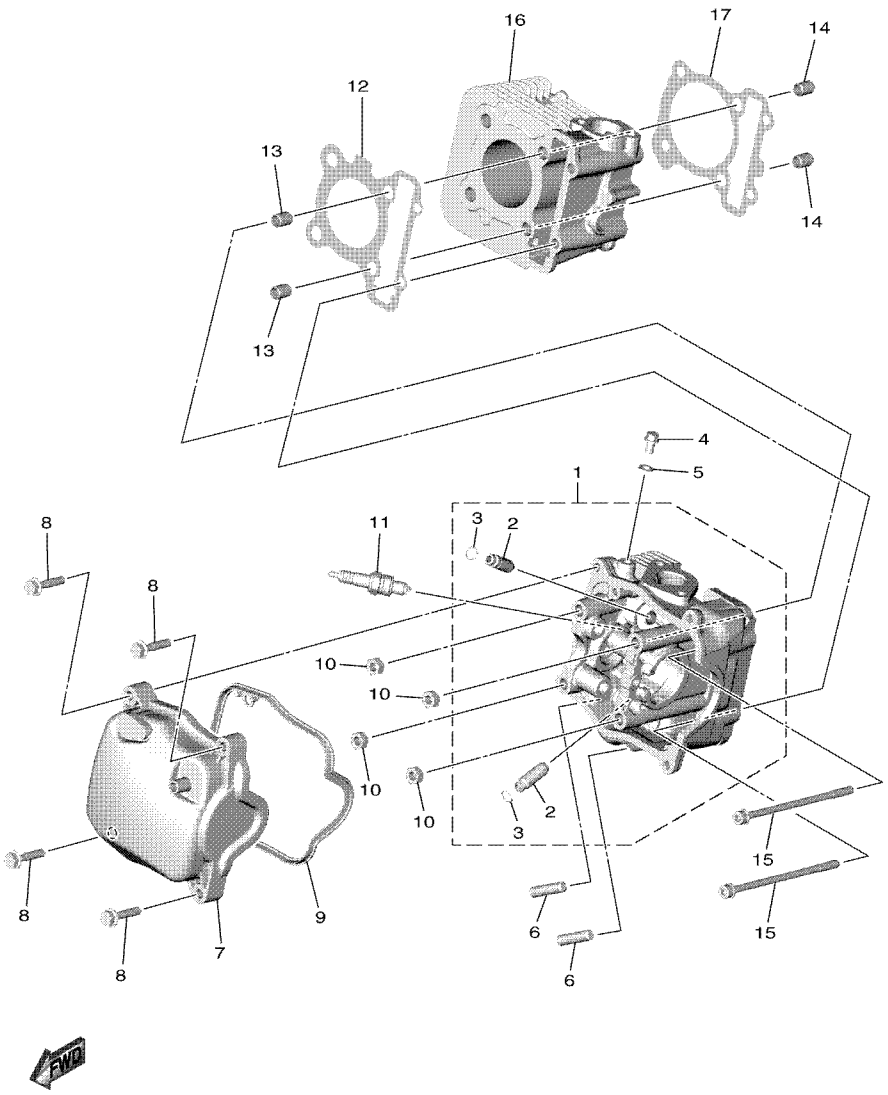


B3W1460DW010

## FIG. 1 CYLINDER

| REF. NO. | PART NO. | DESCRIPTION | BES2 | | | | | REMARKS |
|---|---|---|---|---|---|---|---|---|
| 1 | BES–E1102–00 | CYLINDER HEAD ASSY | 1 | | | | | |
| 2 | 1DR–E1133–10 | .GUIDE, VALVE 1 | 2 | | | | | |
| 3 | 93440–10153 | .CIRCLIP | 2 | | | | | |
| 4 | 95E32–06010 | BOLT, FLANGE DEEP RECESS | 1 | | | | | |
| 5 | 90430–06803 | GASKET | 1 | | | | | |
| 6 | 95612–08618 | BOLT, STUD | 2 | | | | | |
| 7 | B5D–E1191–01 | COVER, CYLINDER HEAD 1 | 1 | | | | | |
| 8 | 95D32–06030 | BOLT, FLANGE DEEP RECESS | 4 | | | | | |
| 9 | B5D–E1193–00 | GASKET, HEAD COVER 1 | 1 | | | | | |
| 10 | 90170–08810 | NUT | 4 | | | | | |
| 11 | 94700–00372 | PLUG, SPARK (NGK CR6HSA) | 1 | | | | | |
| 12 | 2TS–E1181–00 | GASKET, CYLINDER HEAD 1 | 1 | | | | | |
| 13 | 99530–10114 | PIN, DOWEL | 2 | | | | | |
| 14 | 99530–10114 | PIN, DOWEL | 2 | | | | | |
| 15 | 90110–06868 | BOLT, HEXAGON SOCKET HEAD | 2 | | | | | |
| 16 | 2PH–E1311–10 | CYLINDER 1 | 1 | | | | | |
| 17 | B5D–E1351–00 | GASKET, CYLINDER | 1 | | | | | |

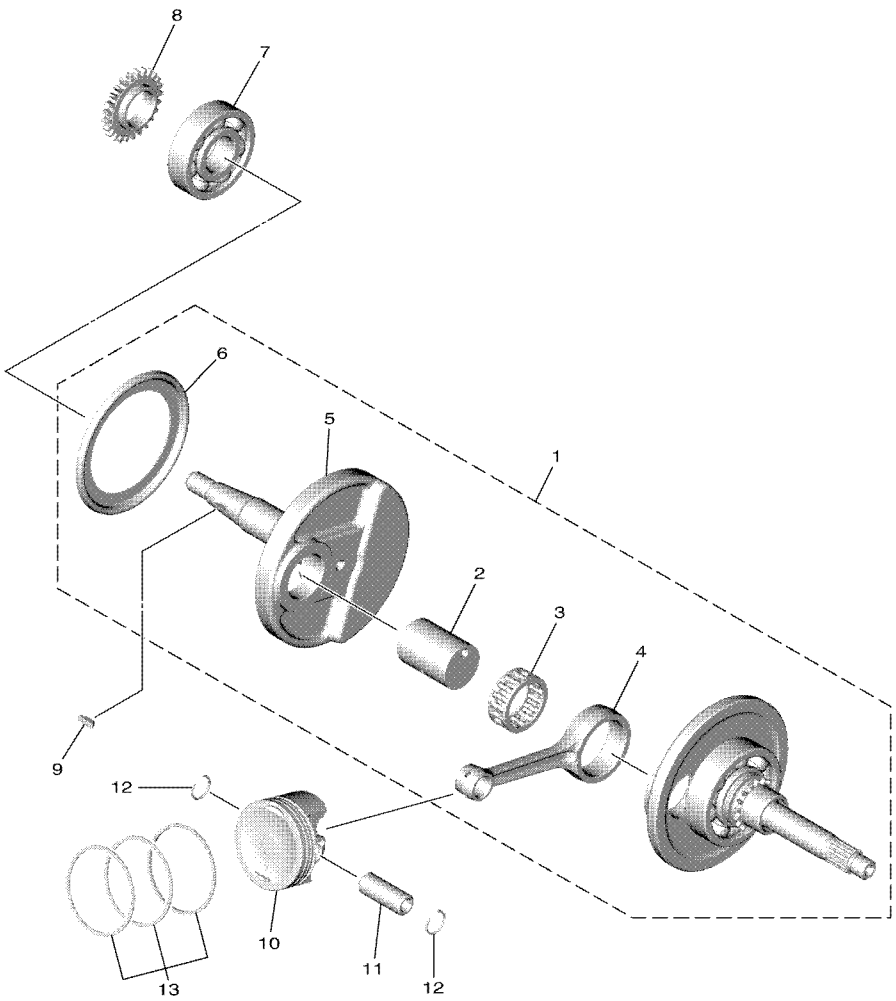

B3W1460DW020

## FIG. 2 CRANKSHAFT & PISTON

| REF. NO. | PART NO. | DESCRIPTION | BES2 | | | | | REMARKS |
|---|---|---|---|---|---|---|---|---|
| 1 | BES–E1400–00 | CRANKSHAFT ASSY | 1 | | | | | |
| 2 | 2BM–E1681–10 | .PIN, CRANK 1 | 1 | | | | | |
| 3 | 93310–528YP | .BEARING | 1 | | | | | |
| 4 | 2PH–E1651–20 | .ROD, CONNECTING | 1 | | | | | |
| 5 | B5D–E1422–00 | .CRANK 2 | 1 | | | | | |
| 6 | 5LW–E3452–00 | .COVER, ROTOR FILTER | 1 | | | | | |
| 7 | 93306–372X7 | BEARING | 1 | | | | | |
| 8 | B5D–E3324–00 | GEAR, PUMP DRIVE | 1 | | | | | |
| 9 | 90280–03017 | KEY, WOODRUFF | 1 | | | | | |
| 10 | 2PH–E1631–00 | PISTON (STD) | 1 | | | | | |
| 11 | 2PH–E1633–00 | PIN, PISTON | 1 | | | | | |
| 12 | 93450–14088 | CIRCLIP | 2 | | | | | |
| 13 | 2PH–E1603–10 | PISTON RING SET (STD) | 1 | | | | | |

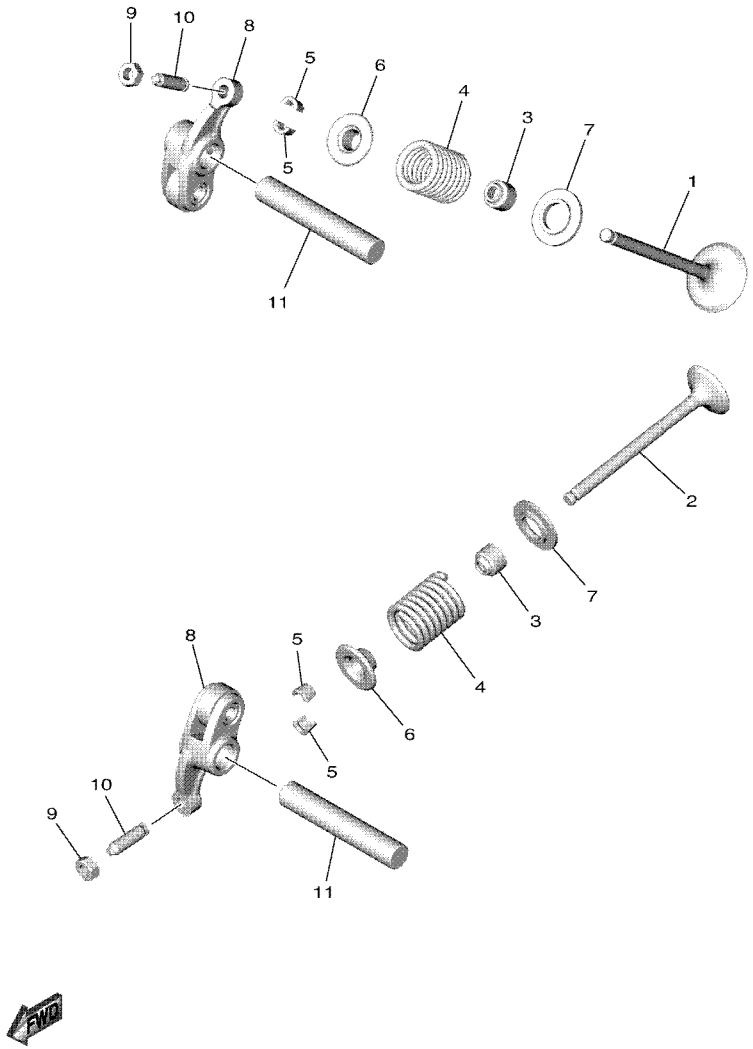


B3W1460DW030

## FIG. 3 VALVE

| REF. NO. | PART NO. | DESCRIPTION | BES2 | | | | | REMARKS |
|---|---|---|---|---|---|---|---|---|
| 1 | 2PH–E2111–00 | VALVE, INTAKE | 1 | | | | | |
| 2 | B5D–E2121–00 | VALVE, EXHAUST | 1 | | | | | |
| 3 | 54P–E2119–00 | SEAL, VALVE STEM | 2 | | | | | |
| 4 | B5D–E2113–10 | SPRING, VALVE INNER | 2 | | | | | |
| 5 | 5TL–E2118–00 | LOCK, VALVE SPRING RETAINER | 4 | | | | | |
| 6 | 2DP–E2117–00 | RETAINER, VALVE SPRING | 2 | | | | | UR Either can use |
| | B63–E2117–01 | RETAINER, VALVE SPRING | 2 | | | | | UR Either can use |
| 7 | 50C–E2126–00 | SEAT, VALVE SPRING 2 | 2 | | | | | |
| 8 | 2PH–E2151–02 | ARM, VALVE ROCKER | 2 | | | | | |
| 9 | 90170–05803 | NUT | 2 | | | | | |
| 10 | 33S–E2159–01 | SCREW, VALVE ADJUSTING | 2 | | | | | |
| 11 | 2PH–E2146–00 | SHAFT, ROCKER | 2 | | | | | |

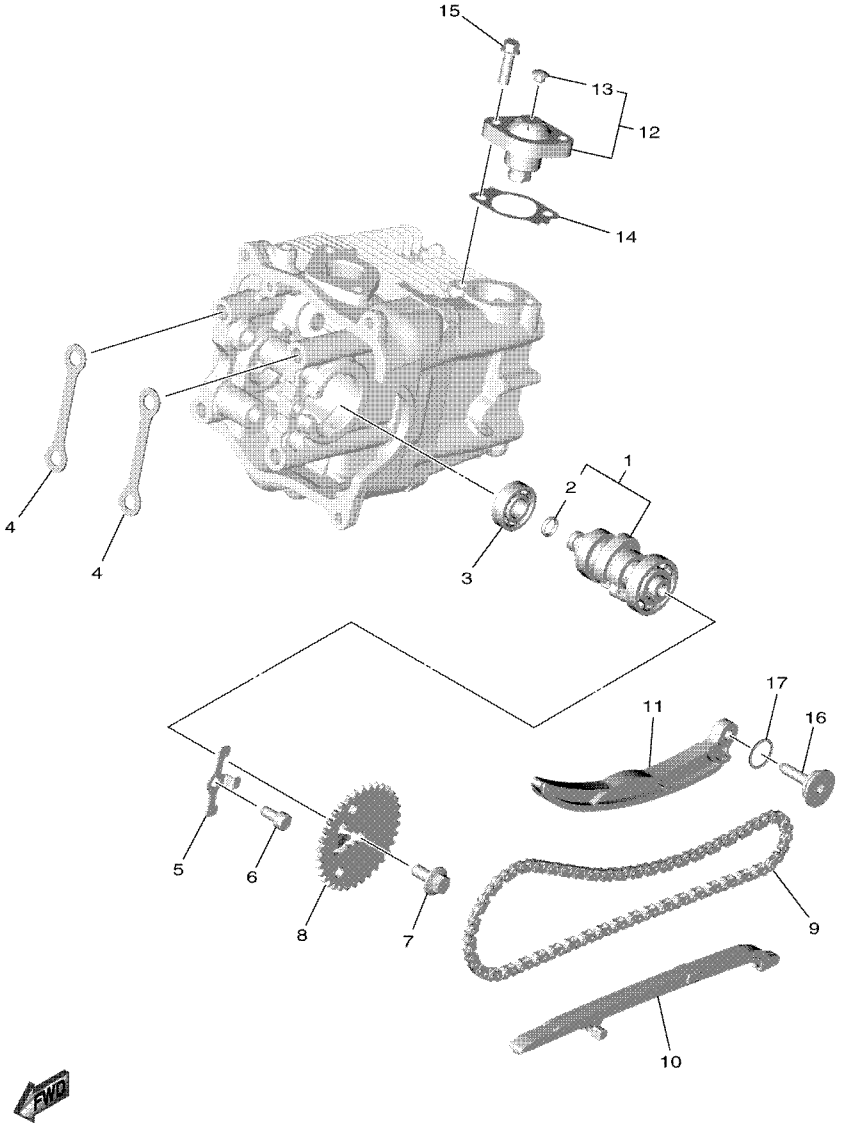


B3W1460DW040

## FIG. 4 CAMSHAFT & CHAIN

| REF. NO. | PART NO. | DESCRIPTION | BES2 | | | | | REMARKS |
|---|---|---|---|---|---|---|---|---|
| 1 | BES–E2170–00 | CAMSHAFT ASSY 1 | 1 | | | | | |
| 2 | 93210–09806 | .O-RING | 1 | | | | | |
| 3 | 93306–001YG | BEARING | 1 | | | | | |
| 4 | B7J–E111F–00 | PLATE | 2 | | | | | |
| 5 | 2PH–E112F–00 | PLATE 2 | 1 | | | | | |
| 6 | 91312–06012 | BOLT, HEXAGON SOCKET HEAD | 1 | | | | | |
| 7 | 90105–07802 | BOLT, FLANGE | 1 | | | | | |
| 8 | B5D–E2176–00 | SPROCKET, CAM CHAIN | 1 | | | | | |
| 9 | 94568–A6092 | CHAIN | 1 | | | | | |
| 10 | 54P–E2231–00 | GUIDE, STOPPER 1 | 1 | | | | | |
| 11 | B5D–E2241–00 | GUIDE, STOPPER 2 | 1 | | | | | |
| 12 | 2PV–E2210–01 | TENSIONER ASSY, CAM CHAIN | 1 | | | | | |
| 13 | 5MX–E2222–00 | .PLUG | 1 | | | | | |
| 14 | B5D–E2213–00 | GASKET, TENSIONER CASE | 1 | | | | | |
| 15 | 95E32–06020 | BOLT, FLANGE DEEP RECESS | 2 | | | | | |
| 16 | B5D–E2157–00 | BOLT | 1 | | | | | |
| 17 | 93210–15862 | O-RING | 1 | | | | | |

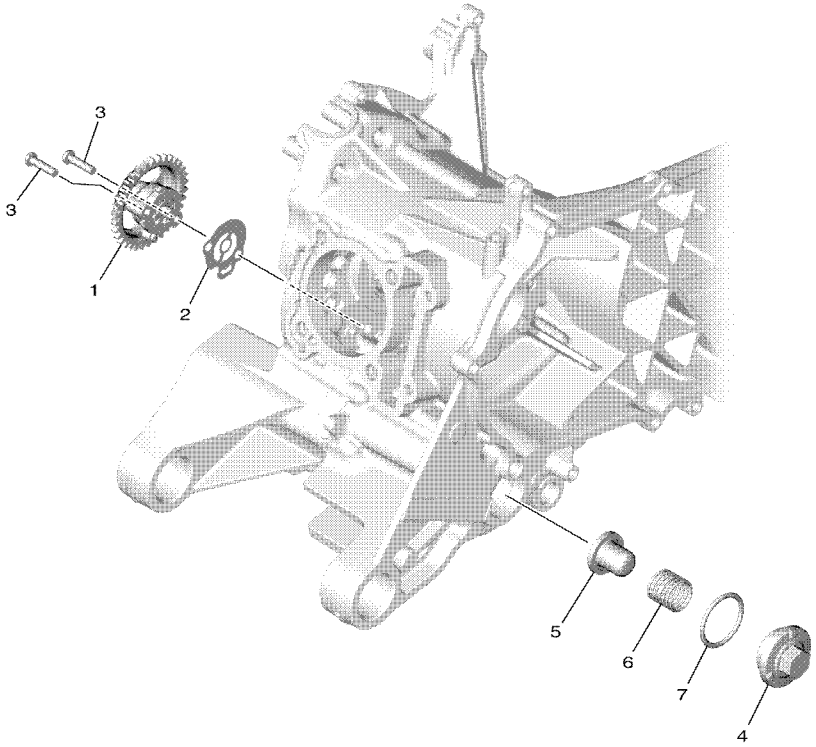

B3W1460DW050

## FIG. 5 OIL PUMP

| REF. NO. | PART NO. | DESCRIPTION | BES2 | | | | | REMARKS |
|---|---|---|---|---|---|---|---|---|
| 1 | 2PH–E3300–10 | OIL PUMP ASSY | 1 | | | | | |
| 2 | BF4–E3475–00 | GASKET | 1 | | | | | |
| 3 | 98502–05020 | SCREW, PAN HEAD | 2 | | | | | |
| 4 | 54P–E5351–01 | PLUG,DRAIN 1 | 1 | | | | | |
| 5 | 1GC–E3411–00 | STRAINER, OIL | 1 | | | | | |
| 6 | 90501–16004 | SPRING, COMPRESSION | 1 | | | | | |
| 7 | 93210–29800 | O-RING | 1 | | | | | |

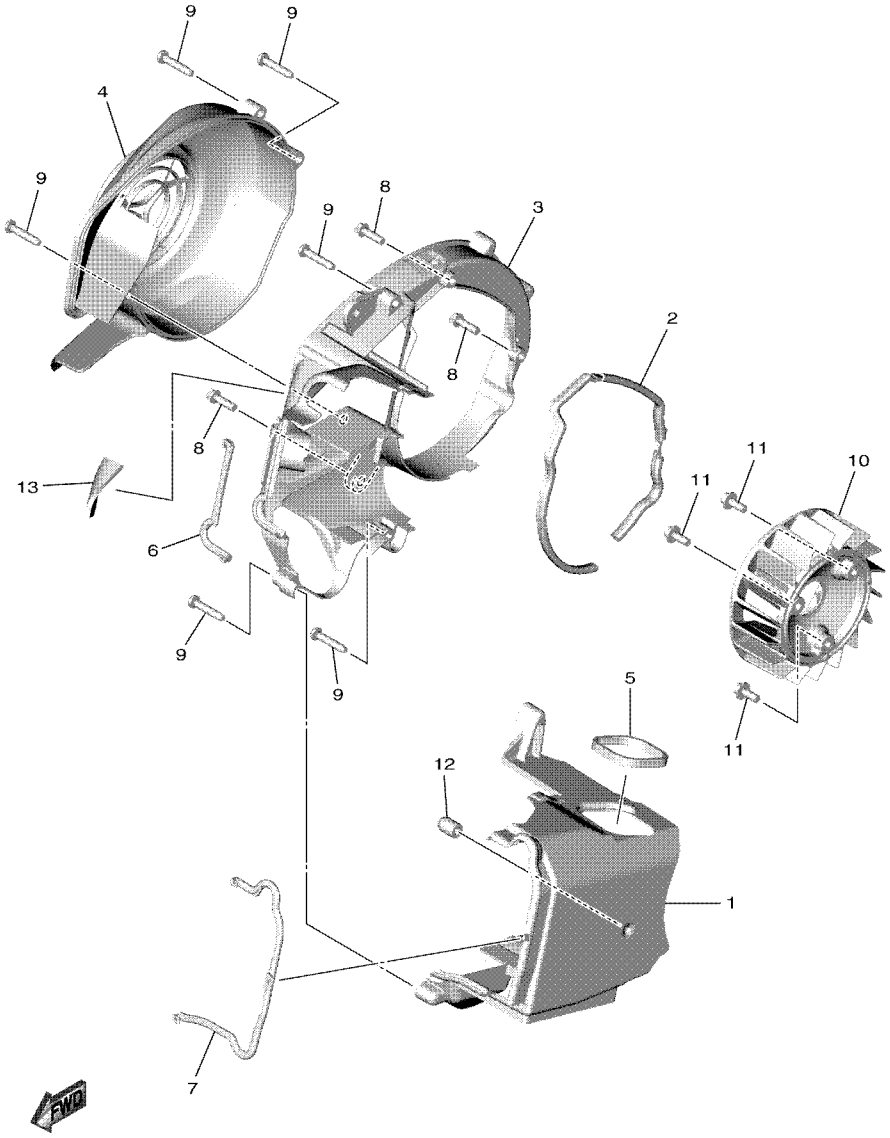

B3W1460DW060

## FIG. 6 AIR SHROUD & FAN

| REF. NO. | PART NO. | DESCRIPTION | BES2 | | | | | REMARKS |
|---|---|---|---|---|---|---|---|---|
| 1 | B5D–E2651–00 | AIR SHROUD, CYLINDER 1 | 1 | | | | | |
| 2 | B5D–E2658–00 | DAMPER, AIR SHROUD 1 | 1 | | | | | |
| 3 | B5D–E2652–00 | AIR SHROUD, CYLINDER 2 | 1 | | | | | |
| 4 | B5D–E2653–01 | AIR SHROUD, CYLINDER 3 | 1 | | | | | |
| 5 | 90520–05819 | DAMPER, PLATE | 1 | | | | | |
| 6 | B5D–E2659–00 | DAMPER, AIR SHROUD 2 | 1 | | | | | |
| 7 | B5D–E2668–00 | DAMPER, AIR SHROUD 3 | 1 | | | | | |
| 8 | 95E32–06020 | BOLT, FLANGE DEEP RECESS | 3 | | | | | |
| 9 | 97702–60530 | SCREW, TAPPING | 6 | | | | | |
| 10 | 2PH–E2611–10 | FAN | 1 | | | | | |
| 11 | 90110–06887 | BOLT, HEXAGON SOCKET HEAD | 3 | | | | | |
| 12 | 5LW–E3569–00 | PLUG, BLIND | 1 | | | | | |
| 13 | 90520–04812 | DAMPER, PLATE | 1 | | | | | |

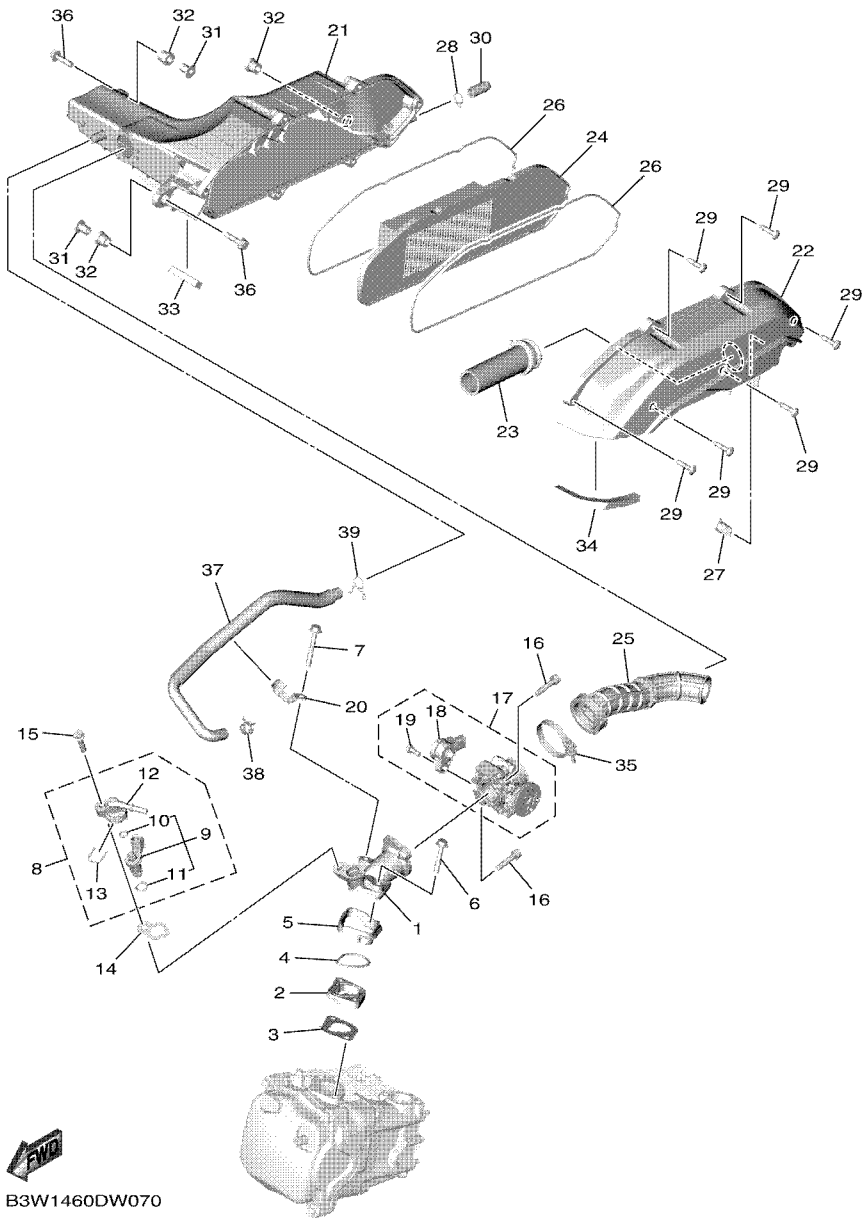


## FIG. 7 INTAKE

| REF. NO. | PART NO. | DESCRIPTION | BES2 | | | | | REMARKS |
|---|---|---|---|---|---|---|---|---|
| 1 | 2PH–E3585–10 | MANIFOLD | 1 | | | | | |
| 2 | 2PH–E3595–00 | JOINT | 1 | | | | | |
| 3 | B5D–E3556–00 | GASKET, MANIFOLD | 1 | | | | | |
| 4 | 93210–35883 | O-RING | 1 | | | | | |
| 5 | 2PH–E3593–01 | DAMPER | 1 | | | | | |
| 6 | 95D32–06035 | BOLT, FLANGE DEEP RECESS | 1 | | | | | |
| 7 | 95D32–06045 | BOLT, FLANGE DEEP RECESS | 1 | | | | | |
| 8 | 2PH–E3770–10 | INJECTOR ASSY | 1 | | | | | |
| 9 | 2PH–E3761–10 | .INJECTOR | 1 | | | | | |
| 10 | 54P–E4147–00 | ..O-RING | 1 | | | | | |
| 11 | 5CA–E4147–00 | ..O-RING | 1 | | | | | |
| 12 | 54P–E3938–00 | .PIPE | 1 | | | | | |
| 13 | 54P–E4137–00 | .CLIP | 1 | | | | | |
| 14 | B5D–E3557–00 | GASKET | 1 | | | | | |
| 15 | 95D32–06025 | BOLT, FLANGE DEEP RECESS | 1 | | | | | |
| 16 | 90110–06846 | BOLT, HEXAGON SOCKET HEAD | 2 | | | | | |
| 17 | B5D–E3750–01 | THROTTLE BODY ASSY | 1 | | | | | |
| 18 | B5D–H5885–01 | .THROTTLE SENSOR ASSY | 1 | | | | | |
| 19 | 1PM–14216–00 | .SCREW | 1 | | | | | |
| 20 | 2PH–E4146–00 | PLATE | 1 | | | | | |
| 21 | B5D–E4411–00 | CASE, AIR CLEANER 1 | 1 | | | | | |
| 22 | B5D–E4412–00 | CAP, CLEANER CASE 1 | 1 | | | | | |
| 23 | 2PH–E4437–00 | DUCT | 1 | | | | | |
| 24 | B5D–E4450–00 | ELEMENT ASSY, AIR CLEANER | 1 | | | | | |
| 25 | B5D–E4453–00 | JOINT, AIR CLEANER 1 | 1 | | | | | |
| 26 | B5D–E4452–10 | SEAL | 2 | | | | | |
| 27 | B5D–E443G–00 | PIPE, DRAIN 2 | 1 | | | | | |

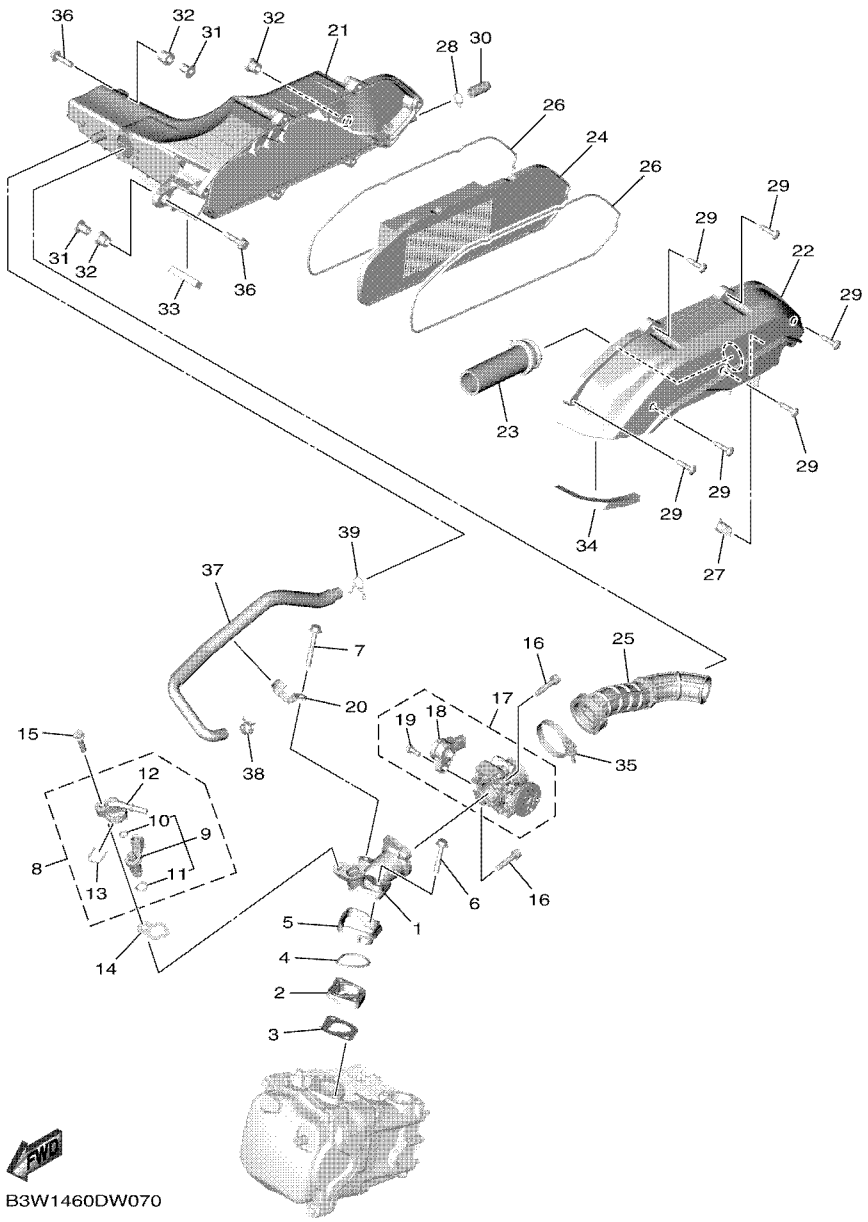


## FIG. 7 INTAKE

| REF. NO. | PART NO. | DESCRIPTION | BES2 | | | | | REMARKS |
|---|---|---|---|---|---|---|---|---|
| 28 | 90467–12807 | CLIP | 1 | | | | | |
| 29 | 97707–50025 | SCREW, TAPPING | 6 | | | | | |
| 30 | 5TL–E443E–00 | PIPE, DRAIN | 1 | | | | | |
| 31 | 90387–068T2 | COLLAR | 2 | | | | | |
| 32 | 90480–13013 | GROMMET | 3 | | | | | |
| 33 | 90520–10851 | DAMPER, PLATE | 1 | | | | | |
| 34 | 90520–10832 | DAMPER, PLATE | 1 | | | | | |
| 35 | 90450–46803 | HOSE CLAMP ASSY | 1 | | | | | |
| 36 | 95D32–06025 | BOLT, FLANGE DEEP RECESS | 2 | | | | | |
| 37 | B5D–E1166–00 | PIPE, BREATHER 1 | 1 | | | | | |
| 38 | 90467–13808 | CLIP | 1 | | | | | |
| 39 | 90467–13858 | CLIP | 1 | | | | | |

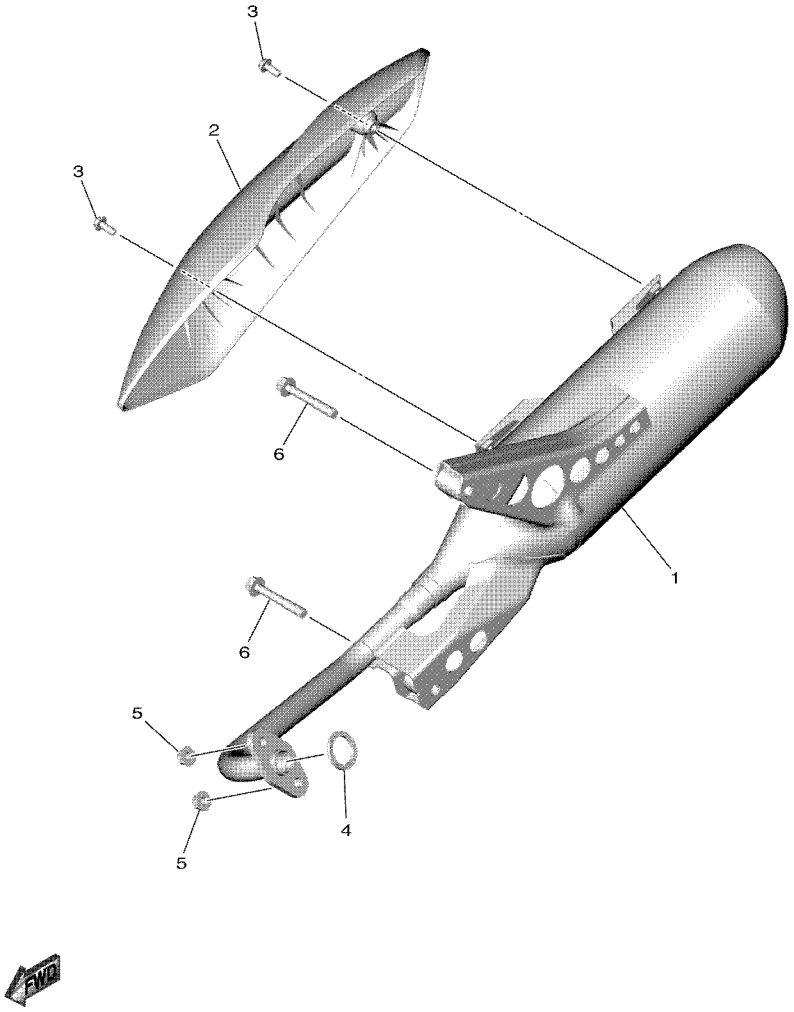


B3W1460DW080

## FIG. 8 EXHAUST

| REF. NO. | PART NO. | DESCRIPTION | BES2 | | | | | REMARKS |
|---|---|---|---|---|---|---|---|---|
| 1 | BES–E4711–00 | MUFFLER 1 | 1 | | | | | |
| 2 | BES–E4718–00 | PROTECTOR, MUFFLER 1 | 1 | | | | | |
| 3 | 90111–06811 | BOLT, HEXAGON SOCKET BUTTON | 2 | | | | | |
| 4 | B92–E4613–00 | GASKET, EXHAUST PIPE | 1 | | | | | |
| 5 | 95702–08500 | NUT, FLANGE | 2 | | | | | |
| 6 | 95D32–08055 | BOLT, FLANGE DEEP RECESS | 2 | | | | | |

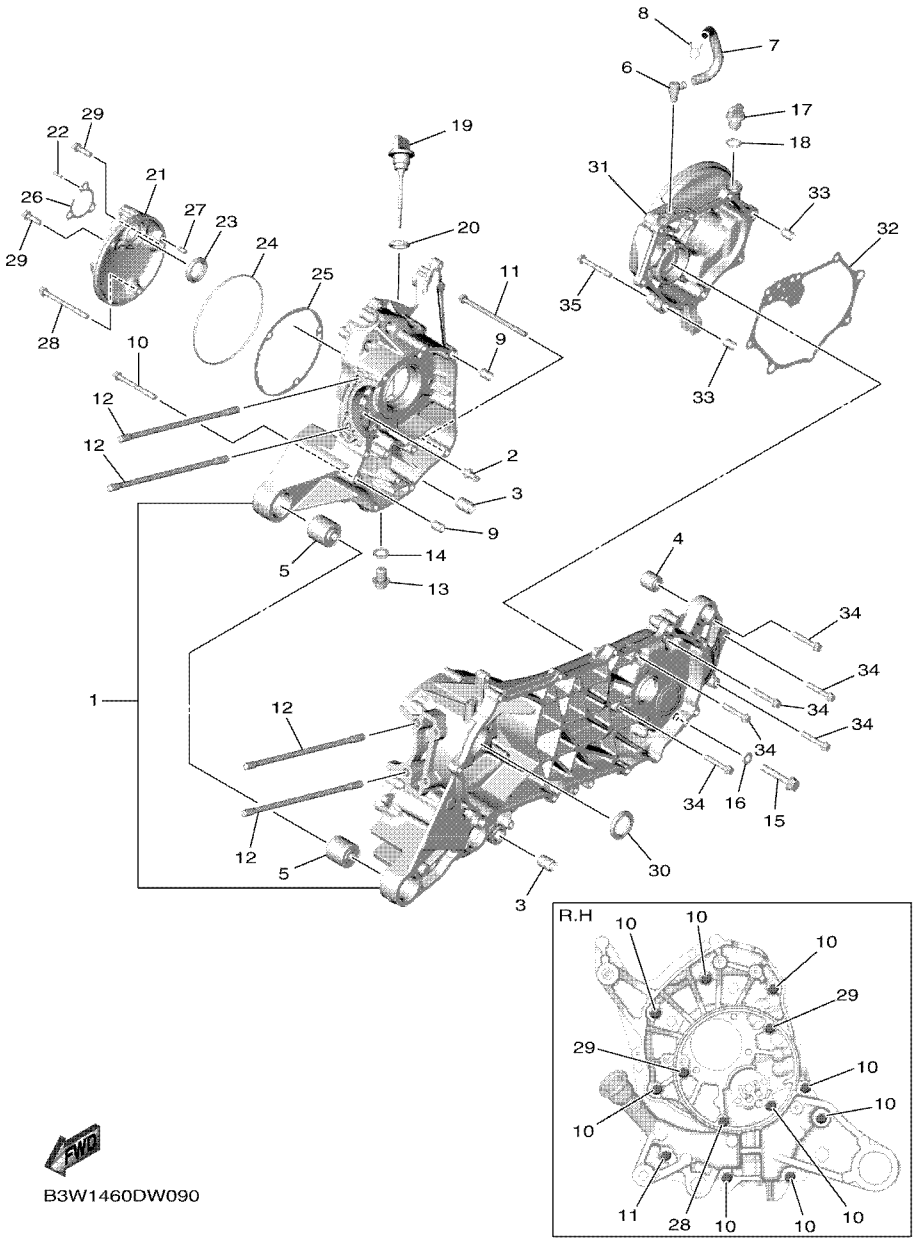


## FIG. 9 CRANKCASE

| REF. NO. | PART NO. | DESCRIPTION | BES2 | | | | | REMARKS |
|---|---|---|---|---|---|---|---|---|
| 1 | BES–E5150–00 | CRANKCASE ASSY | 1 | | | | | |
| 2 | 2PH–E5155–01 | NOZZLE 3 | 1 | | | | | |
| 3 | 1GC–F7121–00 | BUSH | 2 | | | | | |
| 4 | 90388–08803 | DAMPER | 1 | | | | | |
| 5 | 90388–10805 | DAMPER | 2 | | | | | |
| 6 | 54P–E5371–00 | BREATHER | 1 | | | | | |
| 7 | 2SX–E5373–00 | PIPE, BREATHER | 1 | | | | | |
| 8 | 90467–10008 | CLIP | 1 | | | | | |
| 9 | 99530–10114 | PIN, DOWEL | 2 | | | | | |
| 10 | 95E32–06060 | BOLT, FLANGE DEEP RECESS | 9 | | | | | |
| 11 | 95E32–06100 | BOLT, FLANGE DEEP RECESS | 1 | | | | | |
| 12 | 90116–08843 | BOLT, STUD | 4 | | | | | |
| 13 | 90340–12816 | BOLT, STRAIGHT SCREW | 1 | | | | | |
| 14 | 90430–12803 | GASKET | 1 | | | | | |
| 15 | 95812–08045 | BOLT, FLANGE | 1 | | | | | |
| 16 | 90430–08804 | GASKET | 1 | | | | | |
| 17 | 5LW–E5363–00 | PLUG, OIL | 1 | | | | | |
| 18 | 93210–148H8 | O-RING | 1 | | | | | |
| 19 | B5D–E5362–00 | PLUG, OIL LEVEL | 1 | | | | | |
| 20 | 5LW–E3769–00 | O-RING | 1 | | | | | |
| 21 | B5D–E5417–10 | COVER, CAP | 1 | | | | | |
| 22 | 99480–03012 | PIN | 1 | | | | | |
| 23 | 93102–21800 | OIL SEAL | 1 | | | | | |
| 24 | 93211–07800 | O-RING | 1 | | | | | |
| 25 | B5D–E5453–00 | GASKET | 1 | | | | | |
| 26 | B5D–E5463–10 | GASKET, 2 | 1 | | | | | |
| 27 | 99480–05010 | PIN | 1 | | | | | |

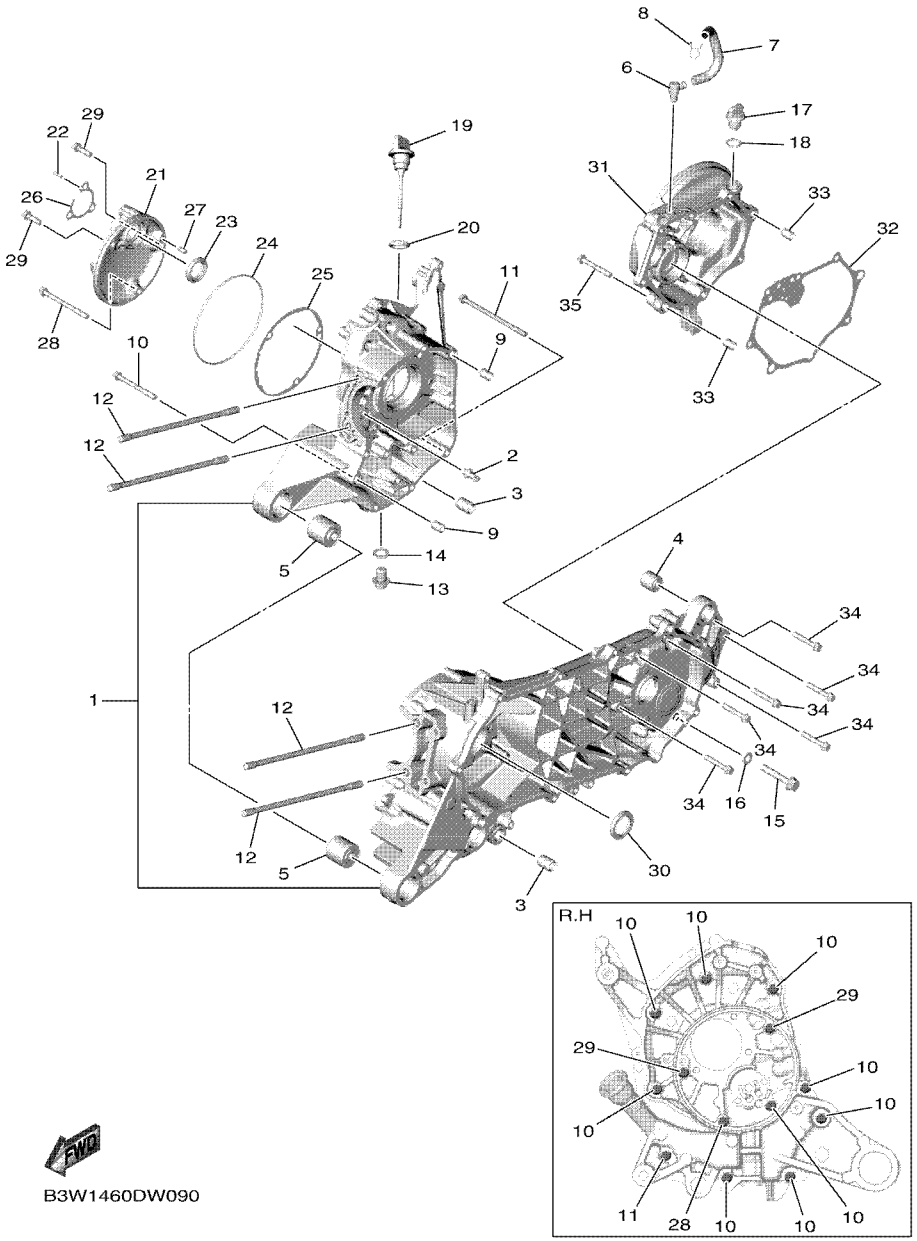


## FIG. 9 CRANKCASE

| REF. NO. | PART NO. | DESCRIPTION | BES2 | | | | | REMARKS |
|---|---|---|---|---|---|---|---|---|
| 28 | 95E32–06070 | BOLT, FLANGE DEEP RECESS | 1 | | | | | |
| 29 | 95E32–06020 | BOLT, FLANGE DEEP RECESS | 2 | | | | | |
| 30 | 93102–25824 | OIL SEAL | 1 | | | | | |
| 31 | BES–E5421–00 | COVER, CRANKCASE 2 | 1 | | | | | UR Either can use |
| | B5D–E5421–01 | COVER, CRANKCASE 2 | 1 | | | | | UR Either can use |
| 32 | B5D–E5461–00 | GASKET, CRANKCASE COVER 2 | 1 | | | | | |
| 33 | 99530–10114 | PIN, DOWEL | 2 | | | | | |
| 34 | 95E32–06035 | BOLT, FLANGE DEEP RECESS | 6 | | | | | |
| 35 | 95E32–06045 | BOLT, FLANGE DEEP RECESS | 1 | | | | | |

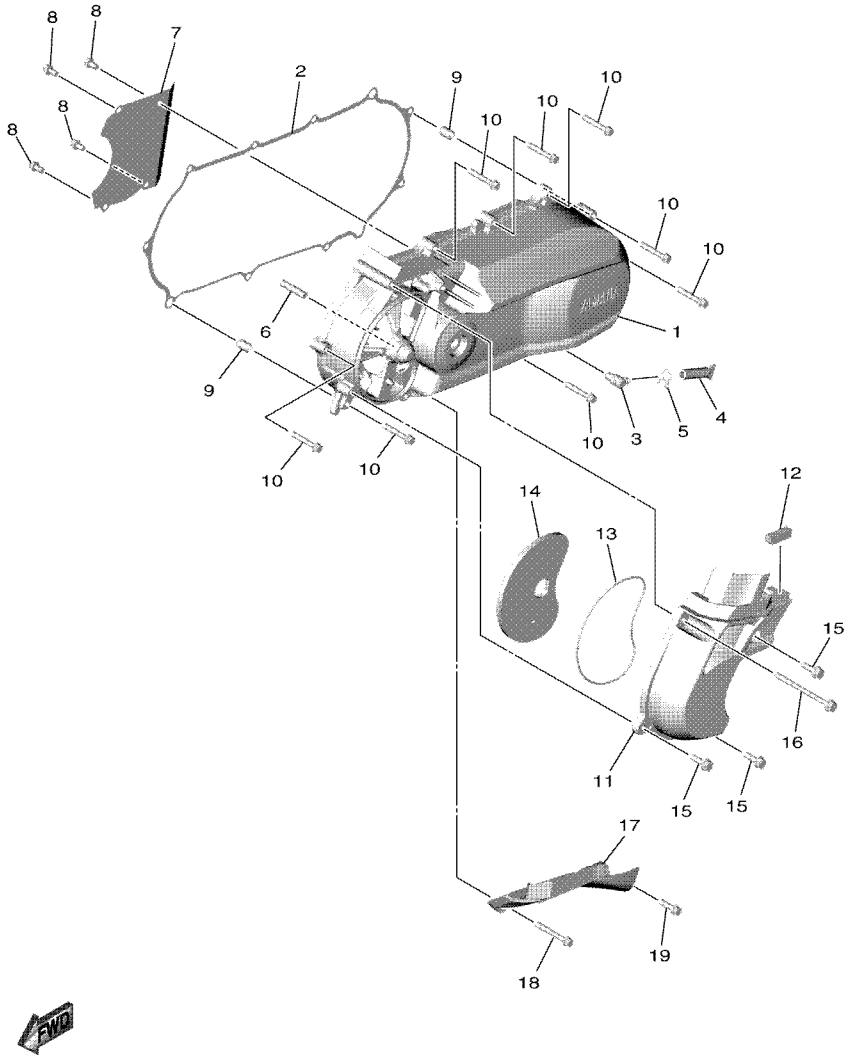


B3W1460DW100

## FIG. 10 CRANKCASE COVER 1

| REF. NO. | PART NO. | DESCRIPTION | BES2 | | | | | REMARKS |
|---|---|---|---|---|---|---|---|---|
| 1 | BES–E5411–00 | COVER, CRANKCASE 1 | 1 | | | | | |
| 2 | B5D–E5451–00 | GASKET, CRANKCASE COVER 1 | 1 | | | | | |
| 3 | 54P–E5371–00 | BREATHER | 1 | | | | | |
| 4 | 4ST–E443E–00 | PIPE, DRAIN | 1 | | | | | |
| 5 | 90467–110A3 | CLIP | 1 | | | | | |
| 6 | B5D–E5659–00 | SHAFT | 1 | | | | | |
| 7 | B5D–E5191–00 | PLATE | 1 | | | | | |
| 8 | 95E32–06010 | BOLT, FLANGE DEEP RECESS | 4 | | | | | |
| 9 | 99530–10114 | PIN, DOWEL | 2 | | | | | |
| 10 | 95E32–06035 | BOLT, FLANGE DEEP RECESS | 8 | | | | | |
| 11 | B3W–E5471–00 | DUCT, AIR | 1 | | | | | |
| 12 | 90520–10834 | DAMPER, PLATE | 1 | | | | | |
| 13 | B5D–E5472–00 | SEAL, AIR DUCT | 1 | | | | | |
| 14 | 2PH–E5407–00 | ELEMENT 1 | 1 | | | | | |
| 15 | 95D32–06020 | BOLT, FLANGE DEEP RECESS | 3 | | | | | |
| 16 | 95D32–06080 | BOLT, FLANGE DEEP RECESS | 1 | | | | | |
| 17 | B5D–E5413–00 | COVER | 1 | | | | | |
| 18 | 95E32–06045 | BOLT, FLANGE DEEP RECESS | 1 | | | | | |
| 19 | 95E32–06020 | BOLT, FLANGE DEEP RECESS | 1 | | | | | |

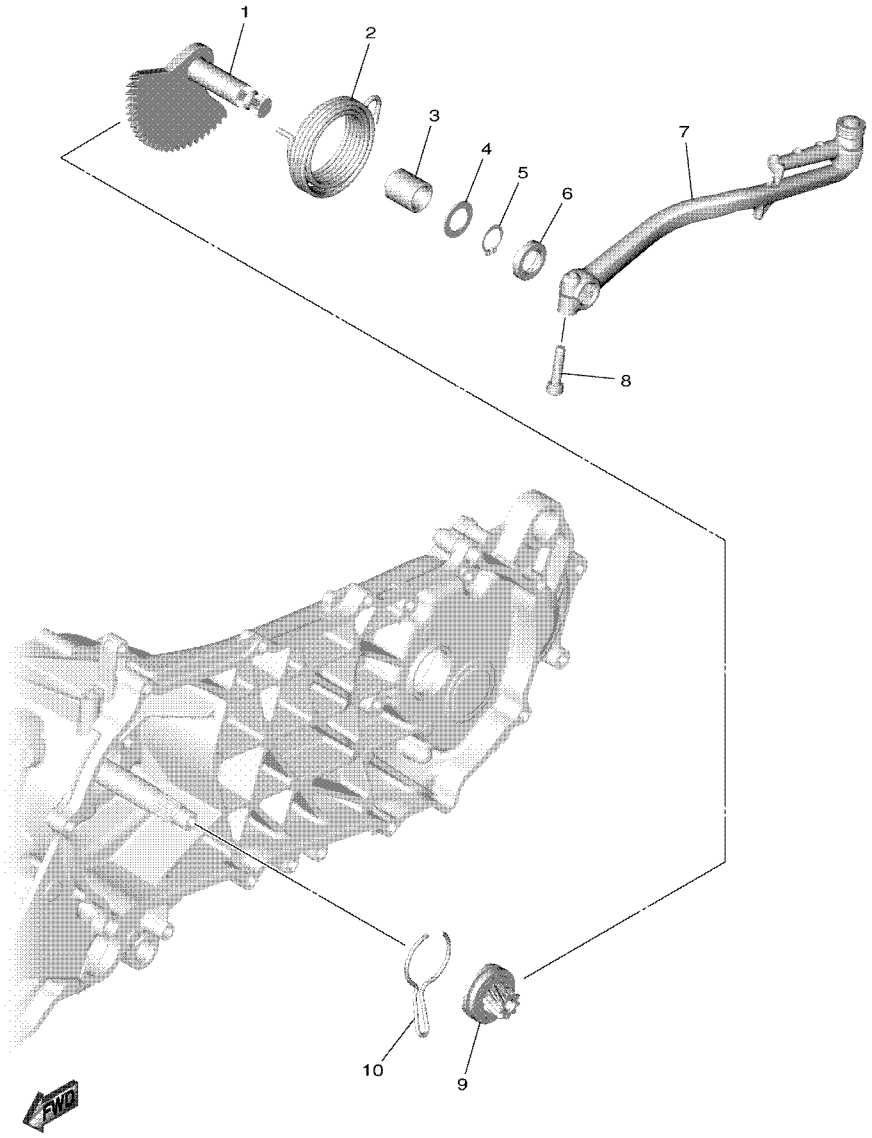

B3W1460DW110

## FIG. 11 STARTER

| REF. NO. | PART NO. | DESCRIPTION | BES2 | | | | | REMARKS |
|---|---|---|---|---|---|---|---|---|
| 1 | B5D–E5601–00 | KICK SHAFT ASSY | 1 | | | | | |
| 2 | 90508–32768 | SPRING, TORSION | 1 | | | | | |
| 3 | 90380–15809 | BUSH, SOLID | 1 | | | | | |
| 4 | 90201–154E8 | WASHER, PLATE (T=1.0) | 1 | | | | | |
| 5 | 99009–15400 | CIRCLIP | 1 | | | | | |
| 6 | 93102–15801 | OIL SEAL | 1 | | | | | |
| 7 | 2BL–E5620–10 | KICK CRANK ASSY | 1 | | | | | |
| 8 | 91312–06025 | BOLT, HEXAGON SOCKET HEAD | 1 | | | | | |
| 9 | B5D–E5630–00 | KICK PINION ASSY | 1 | | | | | |
| 10 | 5MX–E5673–00 | CLIP | 1 | | | | | |

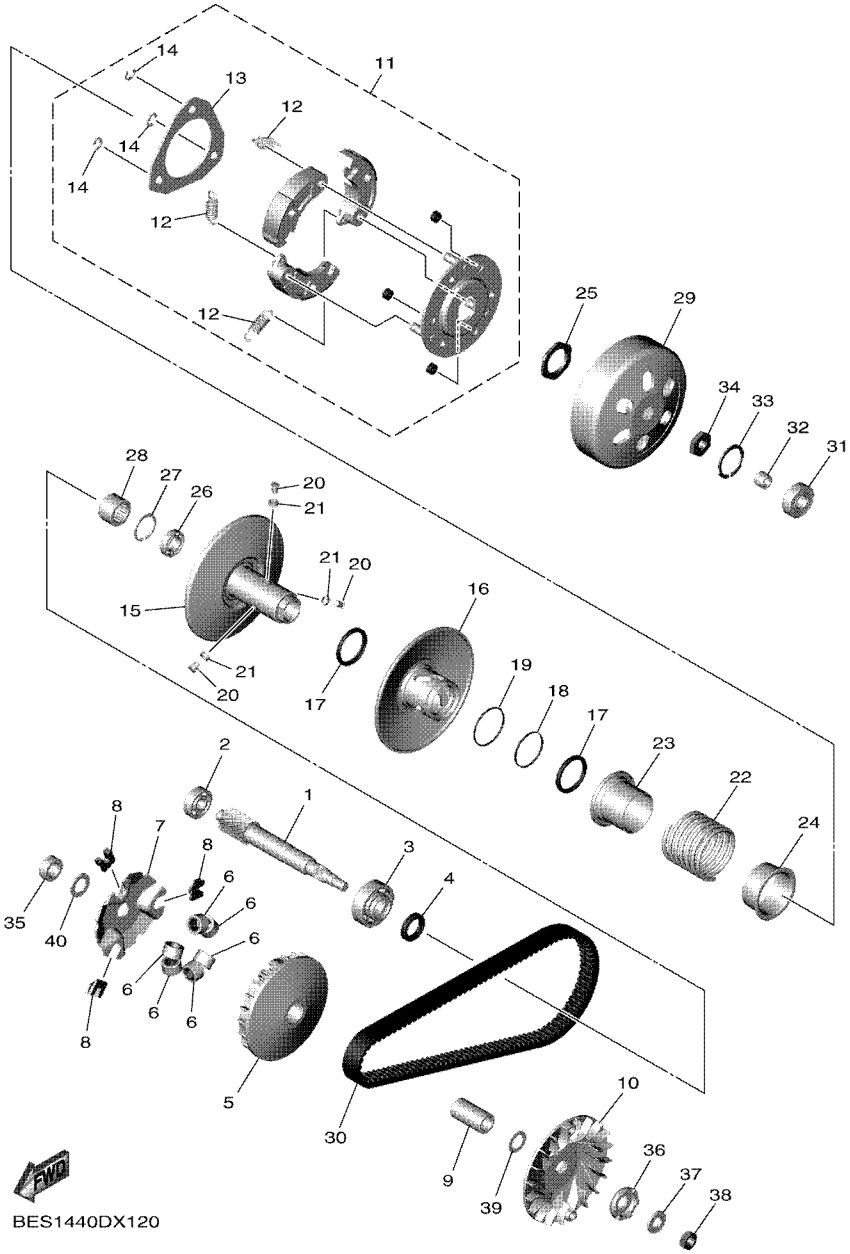


## FIG. 12 CLUTCH

| REF. NO. | PART NO. | DESCRIPTION | BES2 | | | | | REMARKS |
|---|---|---|---|---|---|---|---|---|
| 1 | 2PH–E6111–00 | GEAR, PRIMARY DRIVE (16T) | 1 | | | | | UR Either can use |
| | 2PH–E6111–10 | GEAR, PRIMARY DRIVE (16T) | 1 | | | | | UR Either can use |
| 2 | 93306–201YS | BEARING | 1 | | | | | |
| 3 | 93306–204XX | BEARING | 1 | | | | | |
| 4 | 93102–20815 | OIL SEAL | 1 | | | | | |
| 5 | 2SX–E7620–00 | PRIMARY SLIDING SHEAVE COMP. | 1 | | | | | |
| 6 | 2PH–E7632–20 | WEIGHT | 6 | | | | | |
| 7 | 2SX–E7623–10 | CAM | 1 | | | | | |
| 8 | 2SX–E7653–00 | SLIDER | 3 | | | | | |
| 9 | 54P–E7674–00 | COLLAR, GUIDE | 1 | | | | | |
| 10 | 44D–E7611–00 | SHEAVE, PRIMARY FIXED | 1 | | | | | |
| 11 | 2SX–E6620–10 | CLUTCH CARRIER ASSY | 1 | | | | | |
| 12 | 2DS–E6626–00 | .SPRING, CLUTCH WEIGHT 1 | 3 | | | | | |
| 13 | 2DP–E6523–00 | .PLATE, WEIGHT THRUST | 1 | | | | | |
| 14 | 54P–E6819–00 | .CIRCLIP, CLUTCH | 3 | | | | | |
| 15 | 2SX–E7660–10 | SECONDARY FIXED SHEAVE COMP. | 1 | | | | | |
| 16 | 2SX–E7670–00 | SECONDARY SLIDING SHEAVE | 1 | | | | | |
| 17 | 2SX–E7465–00 | SEAL | 2 | | | | | |
| 18 | 2SX–E7465–30 | SEAL | 1 | | | | | |
| 19 | 2SX–E7465–20 | SEAL | 1 | | | | | |
| 20 | 2DP–E7664–00 | PIN, GUIDE | 3 | | | | | |
| 21 | 2DP–E7674–10 | COLLAR, GUIDE | 3 | | | | | |
| 22 | 2SX–E7683–10 | SPRING, SECONDARY | 1 | | | | | |
| 23 | 2SX–E7684–00 | SEAT, SECONDARY SPRING | 1 | | | | | |
| 24 | 2SX–E7644–10 | SEAT,SPRING | 1 | | | | | |
| 25 | 2DP–E7668–00 | NUT | 1 | | | | | |
| 26 | 2DP–E7678–00 | BEARING | 1 | | | | | |

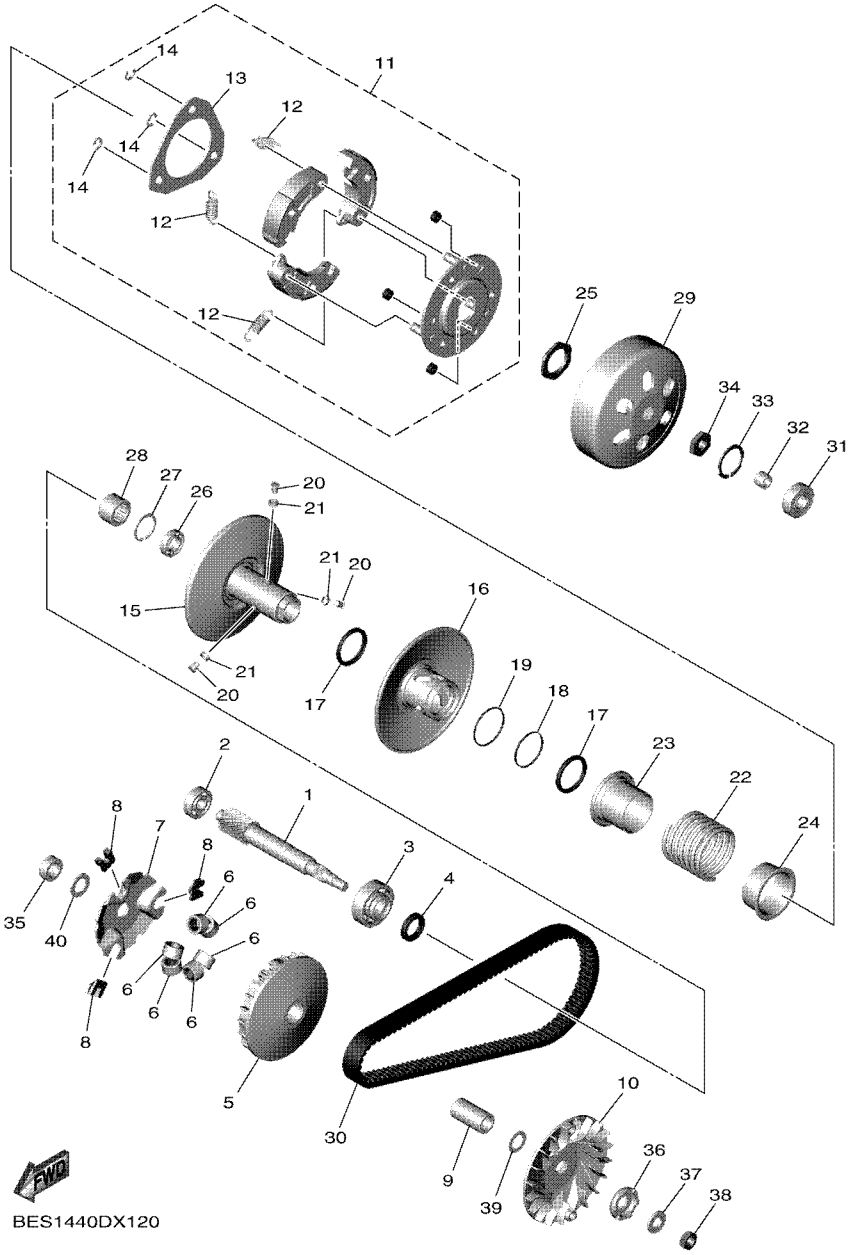


## FIG. 12 CLUTCH

| REF. NO. | PART NO. | DESCRIPTION | BES2 | | | | | REMARKS |
|---|---|---|---|---|---|---|---|---|
| 27 | 2DP–E5744–00 | CIRCLIP | 1 | | | | | |
| 28 | 2DP–E7678–10 | BEARING | 1 | | | | | |
| 29 | 2SX–E6611–00 | CLUTCH HOUSING COMP. | 1 | | | | | |
| 30 | 2PH–E7641–00 | V-BELT | 1 | | | | | |
| 31 | 933A6–202Y0 | BEARING | 1 | | | | | |
| 32 | 90380–10803 | BUSH, SOLID | 1 | | | | | |
| 33 | 99009–35700 | CIRCLIP | 1 | | | | | |
| 34 | 90170–12803 | NUT | 1 | | | | | |
| 35 | 90387–16819 | COLLAR | 1 | | | | | |
| 36 | 5MX–E5657–00 | CLUTCH, ONEWAY | 1 | | | | | |
| 37 | 90208–12808 | WASHER, CONICAL SPRING | 1 | | | | | |
| 38 | 90170–12800 | NUT | 1 | | | | | |
| 39 | 90201–15845 | WASHER, PLATE | 1 | | | | | |
| 40 | 90201–16816 | WASHER, PLATE | 1 | | | | | |

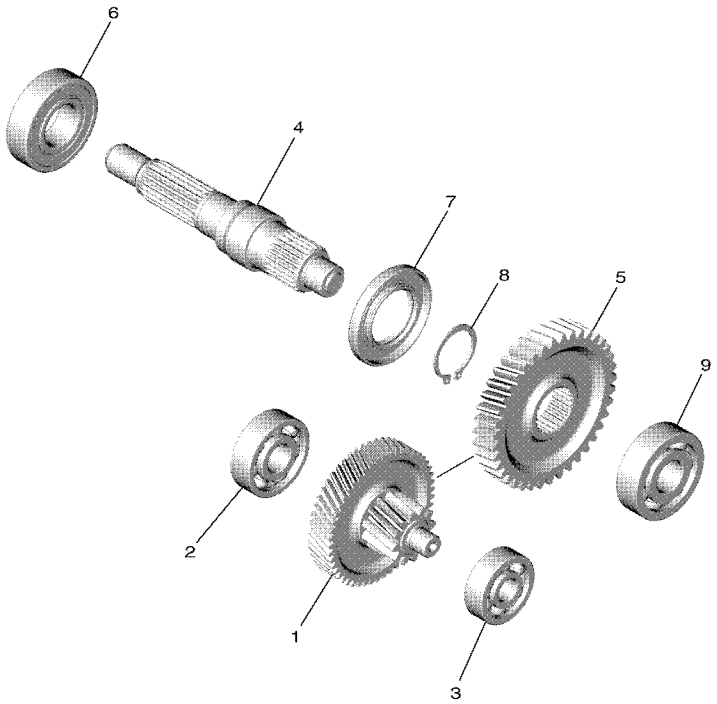

B3W1460DW130

## FIG. 13 TRANSMISSION

| REF. NO. | PART NO. | DESCRIPTION | BES2 | | | | | REMARKS |
|---|---|---|---|---|---|---|---|---|
| 1 | B5D–E7410–00 | MAIN AXLE COMP. (12T/50T) | 1 | | | | | UR Either can use |
| | B5D–E7410–10 | MAIN AXLE COMP. (12T/50T) | 1 | | | | | UR Either can use |
| | B5D–E7410–20 | MAIN AXLE COMP. (12T/50T) | 1 | | | | | UR Either can use |
| | B5D–E7410–30 | MAIN AXLE COMP. (12T/50T) | 1 | | | | | UR Either can use |
| | B5D–E7410–40 | MAIN AXLE COMP. (12T/50T) | 1 | | | | | UR Either can use |
| 2 | 93306–302YU | BEARING | 1 | | | | | |
| 3 | 93306–351Y8 | BEARING | 1 | | | | | |
| 4 | B5D–E7421–00 | AXLE, DRIVE | 1 | | | | | |
| 5 | 2PH–E7211–20 | GEAR, 1ST WHEEL (39T) | 1 | | | | | UR Either can use |
| | 2PH–E7211–30 | GEAR, 1ST WHEEL (39T) | 1 | | | | | UR Either can use |
| | 2PH–E7211–40 | GEAR, 1ST WHEEL (39T) | 1 | | | | | UR Either can use |
| 6 | 93306–272YB | BEARING | 1 | | | | | |
| 7 | 93102–30805 | OIL SEAL | 1 | | | | | |
| 8 | 99009–25400 | CIRCLIP | 1 | | | | | |
| 9 | 93306–303YU | BEARING | 1 | | | | | |

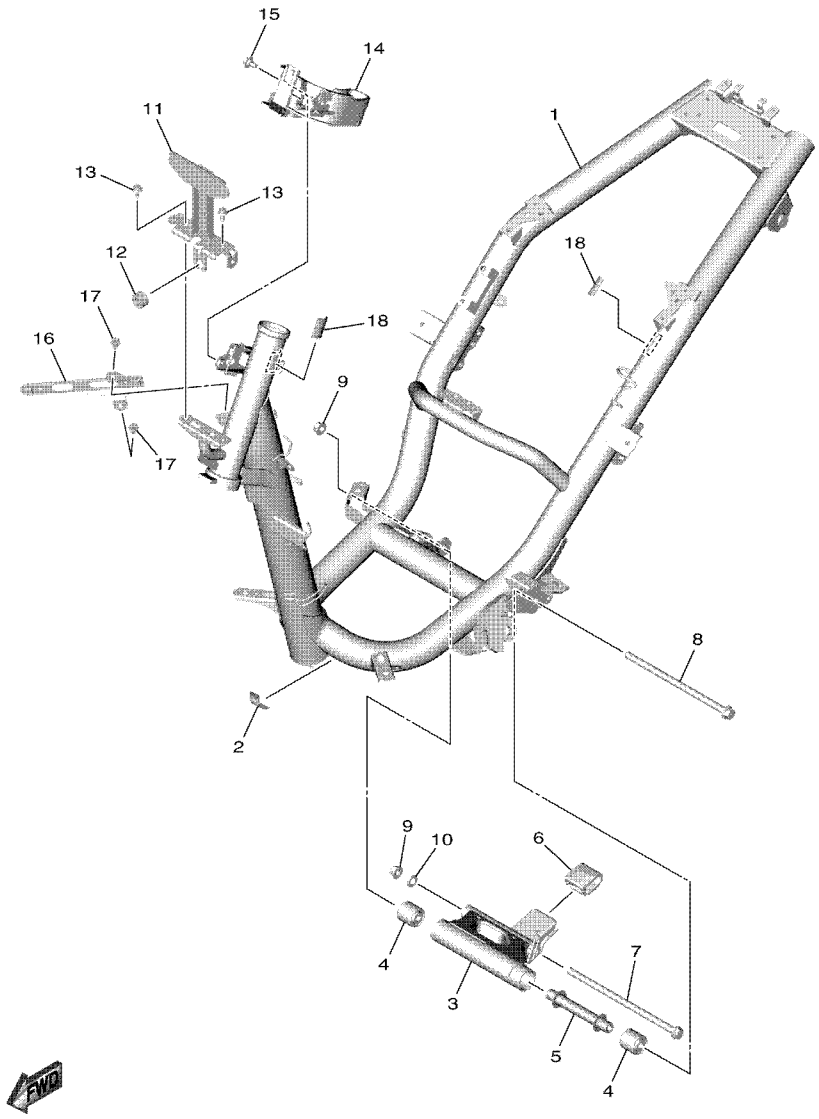


B3W1460DW140

## FIG. 14 FRAME

| REF. NO. | PART NO. | DESCRIPTION | BES2 | | | | | REMARKS |
|---|---|---|---|---|---|---|---|---|
| 1 | BES–F1110–00 | FRAME COMP. | 1 | | | | | |
| 2 | 5D9–F414G–00 | SEAL | 1 | | | | | |
| 3 | 2PH–F1410–20 | ENGINE BRACKET COMP. | 1 | | | | | |
| 4 | 90388–10800 | DAMPER | 2 | | | | | |
| 5 | 54P–F1459–00 | SPACER | 1 | | | | | UR Either can use |
| | BJ7–F1459–00 | SPACER | 1 | | | | | UR Either can use |
| 6 | 2PH–F7114–00 | STOPPER, MAIN STAND | 1 | | | | | |
| 7 | 90105–108B2 | BOLT, FLANGE | 1 | | | | | |
| 8 | 54P–F2141–00 | SHAFT, PIVOT | 1 | | | | | |
| 9 | 95602–10200 | NUT, SELF-LOCKING | 2 | | | | | |
| 10 | 92907–10600 | WASHER, PLATE | 1 | | | | | |
| 11 | BES–F8356–00 | STAY 1 | 1 | | | | | |
| 12 | 90480–14004 | GROMMET | 1 | | | | | |
| 13 | 95802–06012 | BOLT, FLANGE | 2 | | | | | |
| 14 | BES–F1288–00 | GUIDE, CABLE | 1 | | | | | |
| 15 | 90109–068B5 | BOLT | 1 | | | | | |
| 16 | BES–F8358–00 | STAY 3 | 1 | | | | | |
| 17 | 95D32–06010 | BOLT, FLANGE DEEP RECESS | 2 | | | | | |
| 18 | 90520–02806 | DAMPER, PLATE | 2 | | | | | |

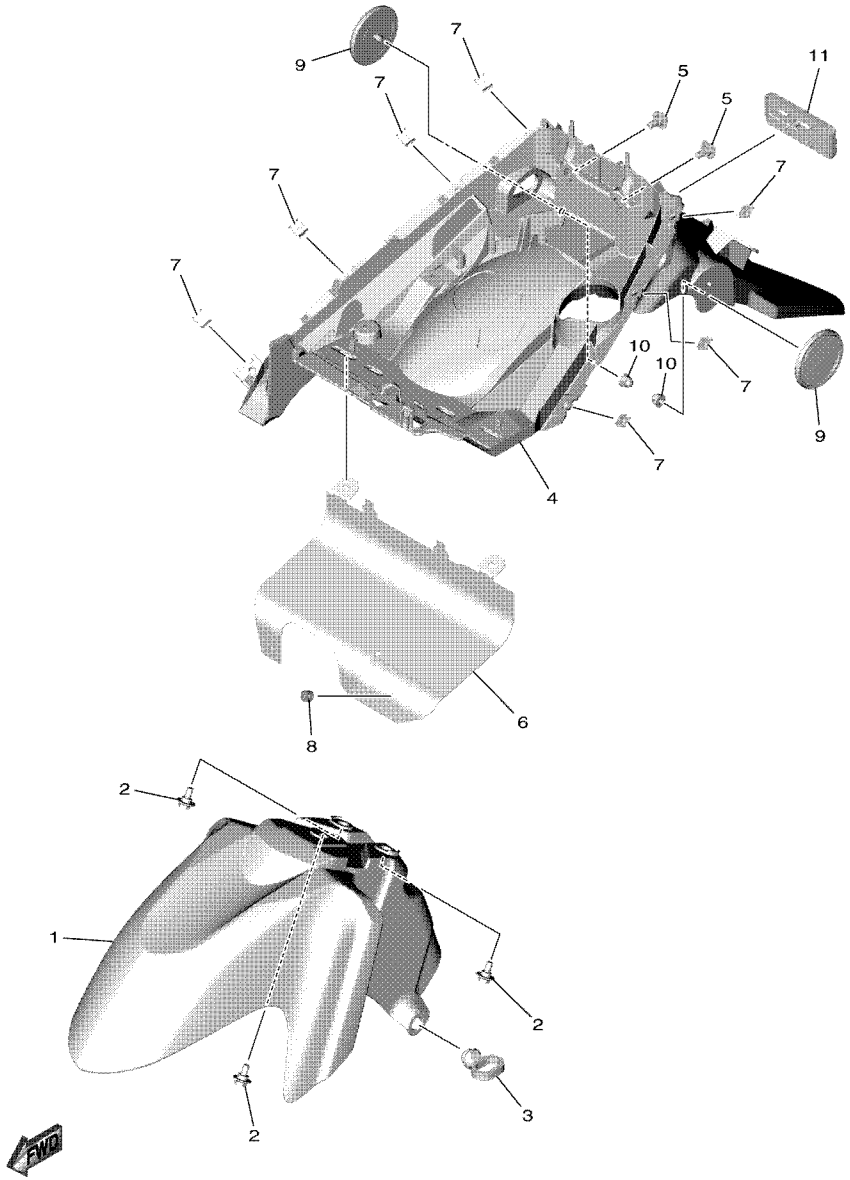

BES2440DY150

## FIG. 15 FENDER

| REF. NO. | PART NO. | DESCRIPTION | BES2 | | | | | REMARKS |
|---|---|---|---|---|---|---|---|---|
| 1 | BES–F1511–00–P3 | FENDER, FRONT | 1 | | | | | UR FOR LCM4 |
| | BES–F1511–00–P4 | FENDER, FRONT | 1 | | | | | UR FOR LLGS6 |
| | BES–F1511–00–P5 | FENDER, FRONT | 1 | | | | | UR FOR DNLGM1 |
| 2 | 90109–068B5 | BOLT | 3 | | | | | |
| 3 | 15K–F1518–00 | HOLDER, CABLE | 1 | | | | | |
| 4 | BES–F1611–00 | FENDER, REAR | 1 | | | | | |
| 5 | 90109–068B5 | BOLT | 2 | | | | | |
| 6 | BES–F1621–00 | FLAP | 1 | | | | | |
| 7 | 90183–05807 | NUT, SPRING | 7 | | | | | |
| 8 | 90480–10003 | GROMMET | 1 | | | | | |
| 9 | 2FC–H5111–00 | REFLECTOR, 1 | 2 | | | | | |
| 10 | 90185–05803 | NUT, SELF-LOCKING | 2 | | | | | |
| 11 | 55D–H5130–00 | REAR REFLECTOR ASSY | 1 | | | | | UR Either can use |
| | BE1–H5130–00 | REAR REFLECTOR ASSY | 1 | | | | | UR Either can use |

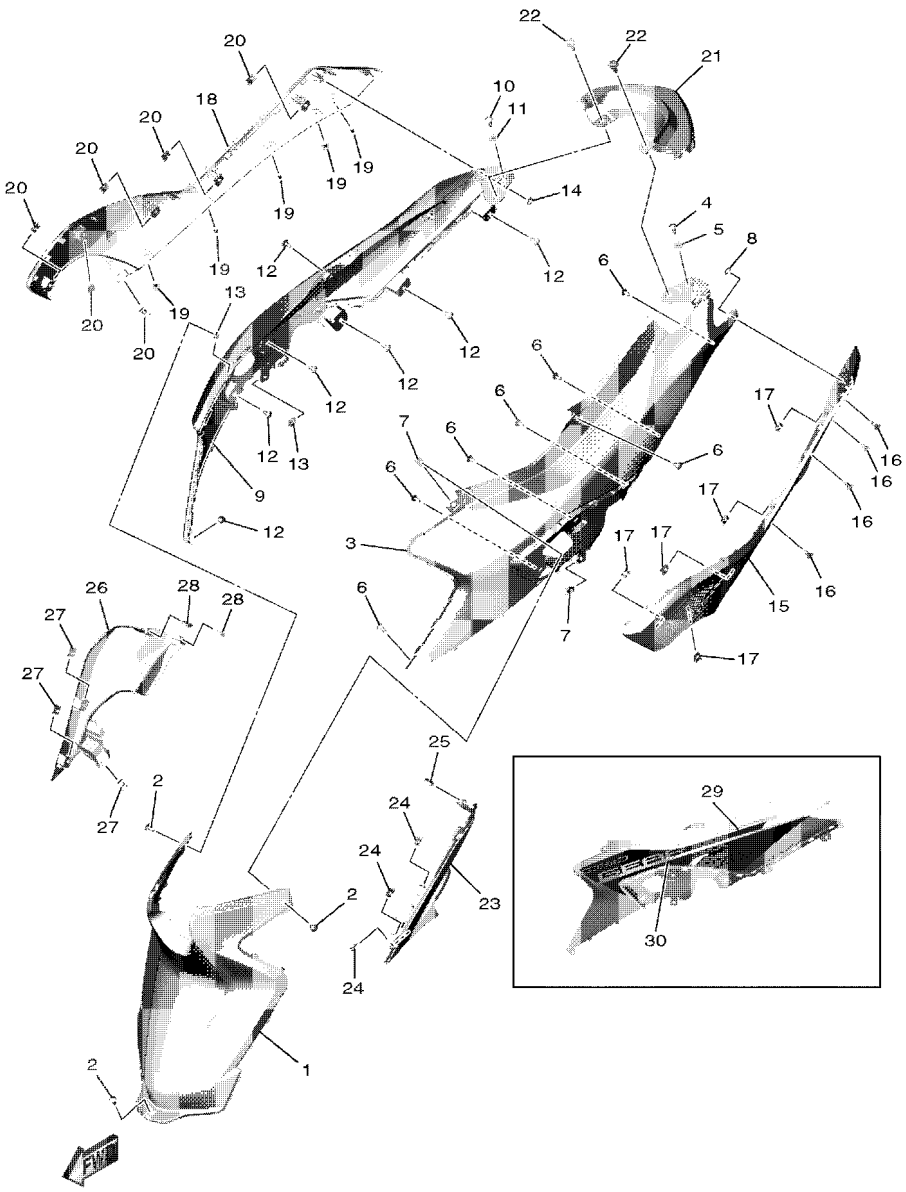


## FIG. 16 SIDE COVER

| REF. NO. | PART NO. | DESCRIPTION | BES2 | | | | | REMARKS |
|---|---|---|---|---|---|---|---|---|
| 1 | BES–F172W–01 | COVER | 1 | | | | | |
| 2 | 97707–50012 | SCREW, TRUSS HEAD TAPPING | 3 | | | | | |
| 3 | BES–F1711–00–P3 | COVER, SIDE 1 | 1 | | | | | UR FOR LLGS6 |
| | BES–F1711–00–P4 | COVER, SIDE 1 | 1 | | | | | UR FOR DNLGM1 |
| | BES–F1711–00–WN | COVER, SIDE 1 | 1 | | | | | UR FOR LCM4 |
| 4 | 97707–50016 | SCREW, TRUSS HEAD TAPPING | 1 | | | | | |
| 5 | 90387–05820 | COLLAR | 1 | | | | | |
| 6 | 97707–50012 | SCREW, TRUSS HEAD TAPPING | 7 | | | | | |
| 7 | 90183–05807 | NUT, SPRING | 2 | | | | | |
| 8 | 90183–04005 | NUT, SPRING | 1 | | | | | |
| 9 | BES–F1721–00–P3 | COVER, SIDE 2 | 1 | | | | | UR FOR LLGS6 |
| | BES–F1721–00–P4 | COVER, SIDE 2 | 1 | | | | | UR FOR DNLGM1 |
| | BES–F1721–00–WN | COVER, SIDE 2 | 1 | | | | | UR FOR LCM4 |
| 10 | 97707–50016 | SCREW, TRUSS HEAD TAPPING | 1 | | | | | |
| 11 | 90387–05820 | COLLAR | 1 | | | | | |
| 12 | 97707–50012 | SCREW, TRUSS HEAD TAPPING | 7 | | | | | |
| 13 | 90183–05807 | NUT, SPRING | 2 | | | | | |
| 14 | 90183–04005 | NUT, SPRING | 1 | | | | | |
| 15 | BES–F1731–01 | COVER, SIDE 3 | 1 | | | | | |
| 16 | 97707–50012 | SCREW, TRUSS HEAD TAPPING | 4 | | | | | |
| 17 | 90183–05807 | NUT, SPRING | 5 | | | | | |
| 18 | BES–F1741–01 | COVER, SIDE 4 | 1 | | | | | |
| 19 | 97707–50012 | SCREW, TRUSS HEAD TAPPING | 5 | | | | | |
| 20 | 90183–05807 | NUT, SPRING | 6 | | | | | |
| 21 | BES–F171E–00 | COVER, SIDE 5 | 1 | | | | | |
| 22 | 90159–06810 | SCREW, WITH WASHER | 2 | | | | | |
| 23 | BES–F1716–01 | LID, SIDE COVER | 1 | | | | | |

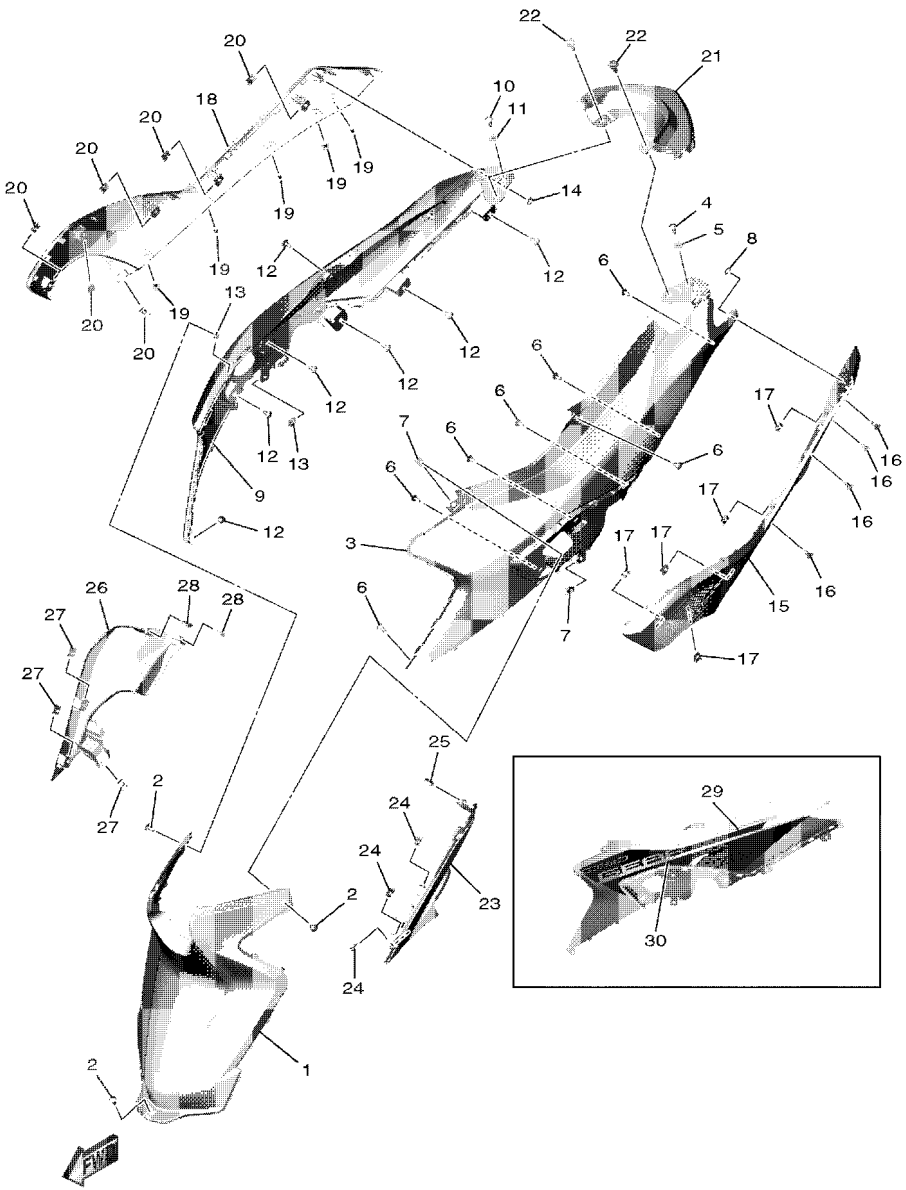


## FIG. 16 SIDE COVER

| REF. NO. | PART NO. | DESCRIPTION | BES2 | | | | | REMARKS |
|---|---|---|---|---|---|---|---|---|
| 24 | 90183–05807 | NUT, SPRING | 3 | | | | | |
| 25 | 90464–04801 | CLAMP | 1 | | | | | |
| 26 | BES–F1726–01 | LID, SIDE COVER 2 | 1 | | | | | |
| 27 | 90183–05807 | NUT, SPRING | 3 | | | | | |
| 28 | 90464–04801 | CLAMP | 2 | | | | | |
| 29 | BES–F173E–30 | GRAPHIC 1 | 1 | | | | | UR FOR LCM4 |
| | BES–F173E–40 | GRAPHIC 1 | 1 | | | | | UR FOR LLGS6 |
| | BES–F173E–50 | GRAPHIC 1 | 1 | | | | | UR FOR DNLGM1 |
| 30 | BES–F173F–30 | GRAPHIC 2 | 1 | | | | | UR FOR LCM4 |
| | BES–F173F–40 | GRAPHIC 2 | 1 | | | | | UR FOR LLGS6 |
| | BES–F173F–50 | GRAPHIC 2 | 1 | | | | | UR FOR DNLGM1 |

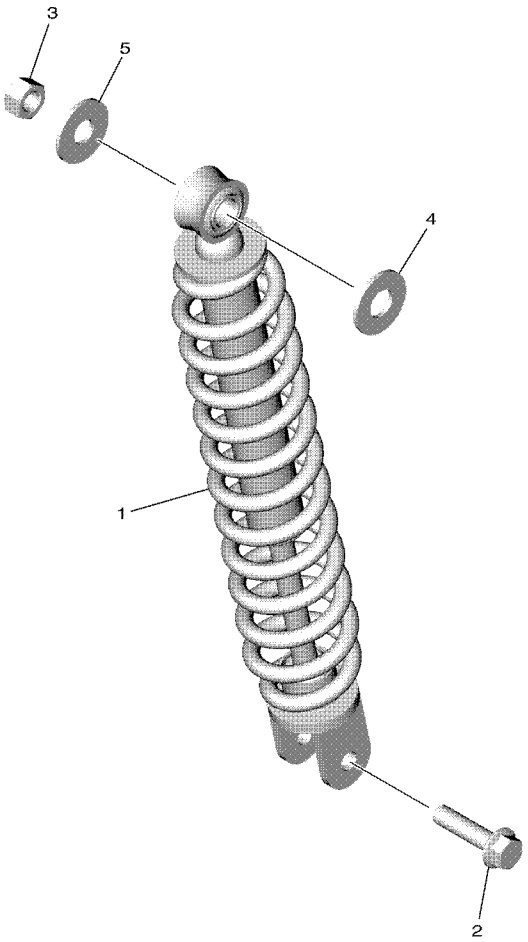

B3W1460DW170

## FIG. 17 REAR SUSPENSION

| REF. NO. | PART NO. | DESCRIPTION | BES2 | | | | | REMARKS |
|---|---|---|---|---|---|---|---|---|
| 1 | 10C–F2210–30 | SHOCK ABSORBER ASSY, REAR | 1 | | | | | |
| 2 | 90105–088H4 | BOLT, FLANGE | 1 | | | | | |
| 3 | 95302–10600 | NUT, HEXAGON | 1 | | | | | |
| 4 | 90201–12028 | WASHER, PLATE | 1 | | | | | |
| 5 | 90201–10065 | WASHER, PLATE | 1 | | | | | |

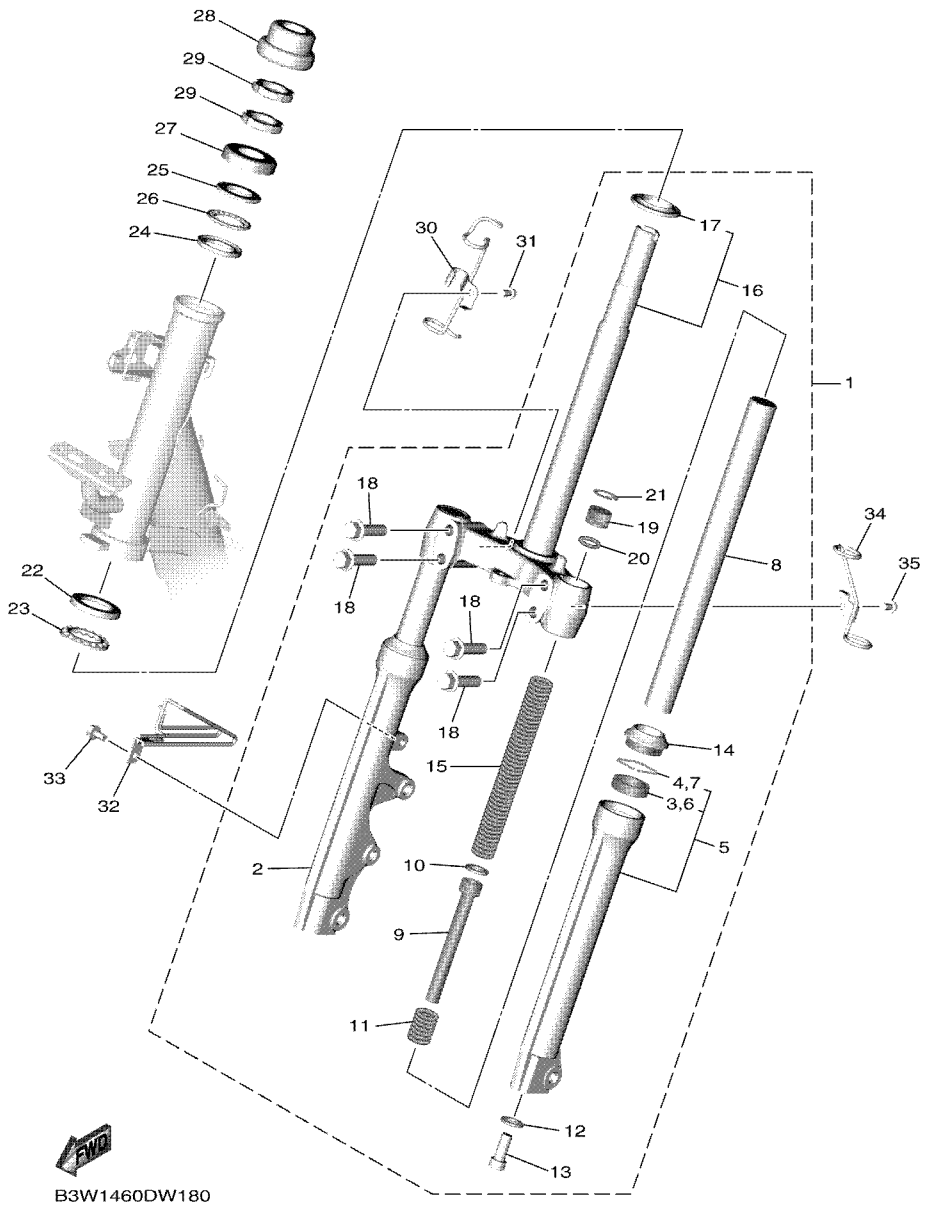


## FIG. 18 STEERING

| REF. NO. | PART NO. | DESCRIPTION | BES2 | | | | | REMARKS |
|---|---|---|---|---|---|---|---|---|
| 1 | B92–F3100–00 | FRONT FORK ASSY | 1 | | | | | |
| 2 | B92–F3136–00 | .TUBE, OUTER 2 | 1 | | | | | |
| 3 | 4UV–F3145–00 | ..OIL SEAL | 1 | | | | | |
| 4 | 5P0–F3156–00 | ..RING, SNAP | 1 | | | | | |
| 5 | B92–F3126–00 | .TUBE, OUTER (L.H) | 1 | | | | | |
| 6 | 4UV–F3145–00 | ..OIL SEAL | 1 | | | | | |
| 7 | 5P0–F3156–00 | ..RING, SNAP | 1 | | | | | |
| 8 | B92–F3110–00 | .INNER TUBE COMP.1 | 2 | | | | | |
| 9 | B92–F3170–00 | .CYLINDER COMP., FRONT FORK | 2 | | | | | |
| 10 | 2JG–F3157–00 | .RING, PISTON | 2 | | | | | |
| 11 | 5TF–F3152–00 | .SPRING, SUB | 2 | | | | | |
| 12 | 509–F3158–L0 | .GASKET | 2 | | | | | |
| 13 | 31D–F3181–50 | .BOLT, HEXAGON SOCKET HEAD | 2 | | | | | |
| 14 | 5LL–F3144–00 | .SEAL, DUST | 2 | | | | | |
| 15 | B92–F3141–00 | .SPRING, FRONT FORK | 2 | | | | | |
| 16 | B92–F3340–00 | .UNDER BRACKET COMP. | 1 | | | | | |
| 17 | 4FP–F3411–10 | ..RACE, BALL 1 | 1 | | | | | |
| 18 | 4D0–F3346–00 | .BOLT 1 | 4 | | | | | |
| 19 | 1FC–F3111–10 | .BOLT, CAP | 2 | | | | | |
| 20 | 2JG–F3147–00 | .O-RING | 2 | | | | | |
| 21 | 31D–F3153–00 | .RING, SNAP | 2 | | | | | |
| 22 | 1KL–F3412–10 | RACE, BALL 2 | 1 | | | | | |
| 23 | 5VL–F341E–10 | RETAINER, BALL BEARING | 1 | | | | | |
| 24 | 4RT–F3412–10 | RACE, BALL 2 | 1 | | | | | |
| 25 | 4RT–F3411–10 | RACE, BALL 1 | 1 | | | | | |
| 26 | 1P6–F341E–10 | RETAINER, BALL BEARING | 1 | | | | | |
| 27 | 2WB–F3416–00 | COVER, BALL RACE 2 | 1 | | | | | |

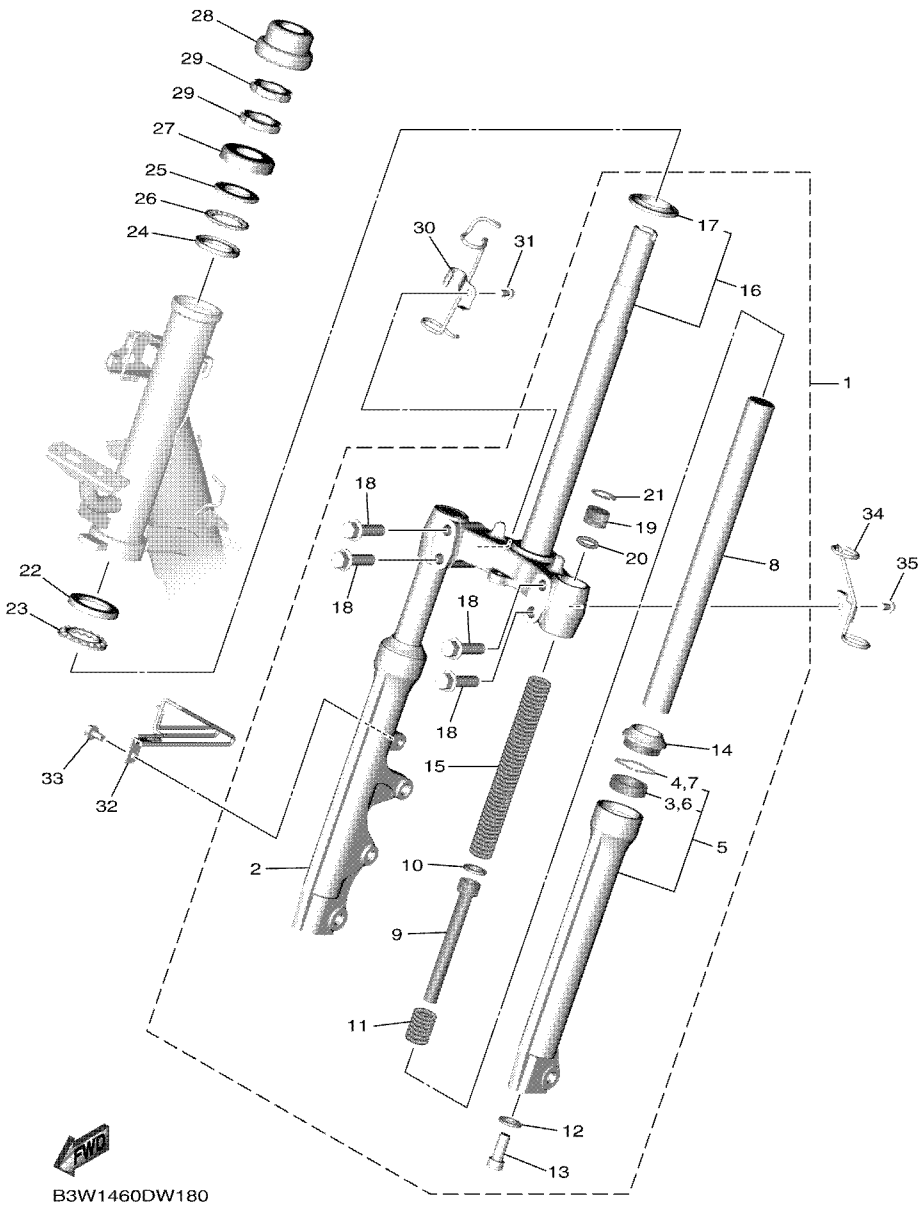


## FIG. 18 STEERING

| REF. NO. | PART NO. | DESCRIPTION | BES2 | | | | | REMARKS |
|---|---|---|---|---|---|---|---|---|
| 28 | 54P–F3415–00 | COVER, BALL RACE 1 | 1 | | | | | |
| 29 | 90179–25812 | NUT | 2 | | | | | |
| 30 | B92–F5875–00 | HOLDER, BRAKE HOSE 1 | 1 | | | | | |
| 31 | 95D02–06010 | BOLT, FLANGE DEEP RECESS | 1 | | | | | |
| 32 | B92–F5876–00 | HOLDER, BRAKE HOSE 2 | 1 | | | | | |
| 33 | 95D32–06012 | BOLT, FLANGE DEEP RECESS | 1 | | | | | |
| 34 | BES–F1161–00 | HOLDER, CABLE | 1 | | | | | |
| 35 | 95D02–06010 | BOLT, FLANGE DEEP RECESS | 1 | | | | | |

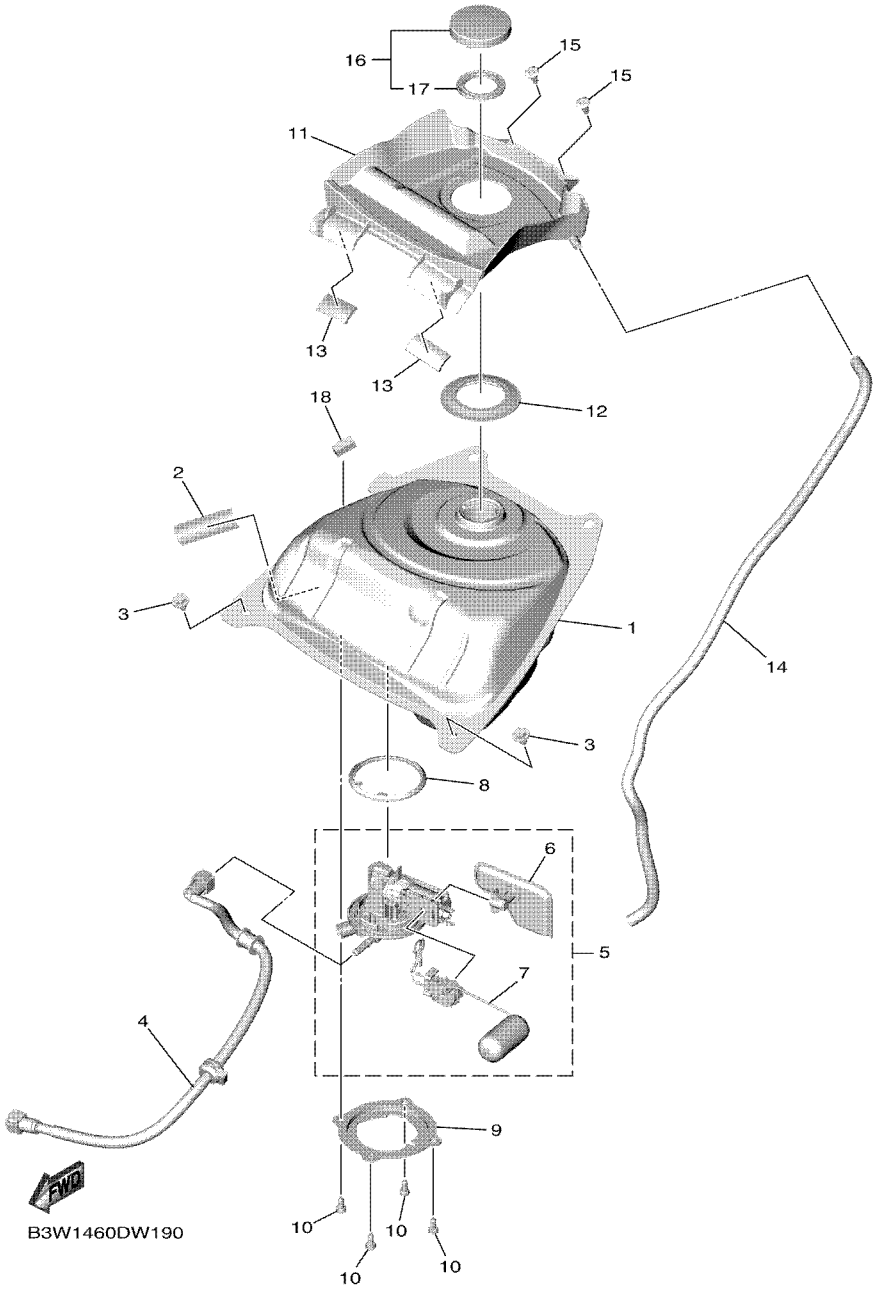


## FIG. 19 FUEL TANK

| REF. NO. | PART NO. | DESCRIPTION | BES2 | | | | | REMARKS |
|---|---|---|---|---|---|---|---|---|
| 1 | B92–F4110–00 | FUEL TANK COMP. | 1 | | | | | |
| 2 | 5D9–F414G–00 | SEAL | 1 | | | | | |
| 3 | 90119–06155 | BOLT, WITH WASHER | 2 | | | | | |
| 4 | 2PH–E3971–02 | PIPE, FUEL 1 | 1 | | | | | |
| 5 | B3W–E3907–11 | FUEL PUMP COMP. | 1 | | | | | |
| 6 | 54P–E3915–00 | .FILTER, FUEL SUCTION | 1 | | | | | |
| 7 | 2PH–H5752–00 | .SENDER | 1 | | | | | |
| 8 | 54P–F414G–10 | SEAL | 1 | | | | | |
| 9 | B92–F4491–00 | BRACKET, FUEL PUMP | 1 | | | | | |
| 10 | 91332–05010 | BOLT | 4 | | | | | |
| 11 | BES–F41B1–01 | COVER, TANK | 1 | | | | | |
| 12 | B92–F414G–00 | SEAL | 1 | | | | | |
| 13 | BBY–H2126–00 | PAD, BATTERY | 2 | | | | | |
| 14 | 91A20–07065 | TUBE, FLEXIBLE VINYL | 1 | | | | | |
| 15 | 90269–06816 | RIVET | 2 | | | | | |
| 16 | 4YY–F4610–00 | CAP ASSY | 1 | | | | | |
| 17 | 4YY–F4612–00 | .PACKING, CAP | 1 | | | | | |
| 18 | 90520–08812 | DAMPER, PLATE | 1 | | | | | |

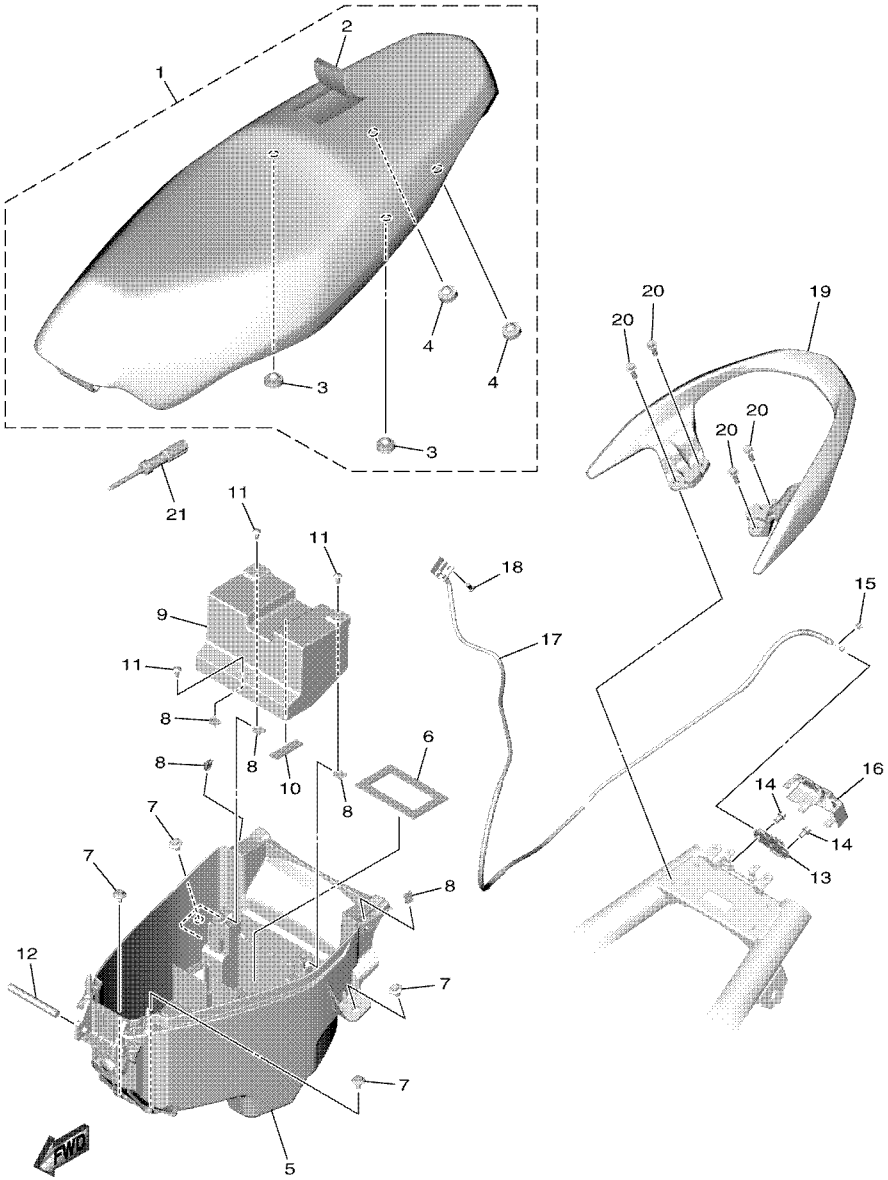

B3W1460DW200

## FIG. 20 SEAT

| REF. NO. | PART NO. | DESCRIPTION | BES2 | | | | | REMARKS |
|---|---|---|---|---|---|---|---|---|
| 1 | BES–F4730–00 | DOUBLE SEAT ASSY | 1 | | | | | |
| 2 | BES–F470F–00 | .SEAT COVER COMP. | 1 | | | | | |
| 3 | 44P–F4741–00 | .PAD, SEAT | 2 | | | | | |
| 4 | 4HF–F4741–00 | .PAD, SEAT | 2 | | | | | |
| 5 | BES–F473R–00 | BOX 1 | 1 | | | | | |
| 6 | 1VB–H2176–00 | DAMPER | 1 | | | | | |
| 7 | 90109–068B4 | BOLT | 4 | | | | | |
| 8 | 90183–05807 | NUT, SPRING | 5 | | | | | |
| 9 | BES–H2129–01 | COVER, BATTERY | 1 | | | | | |
| 10 | 90520–03806 | DAMPER, PLATE | 1 | | | | | |
| 11 | 97707–50012 | SCREW, TRUSS HEAD TAPPING | 3 | | | | | |
| 12 | 2WB–F4727–00 | PIN, SEAT FITTING | 1 | | | | | |
| 13 | 40D–F4780–01 | SEAT LOCK ASSY | 1 | | | | | |
| 14 | 95E32–06010 | BOLT, FLANGE DEEP RECESS | 2 | | | | | |
| 15 | 1S8–F4768–00 | STOPPER | 1 | | | | | |
| 16 | B92–F472T–01 | COVER, SEAT LOCK | 1 | | | | | |
| 17 | 2SX–F478E–10 | CABLE, SEAT LOCK | 1 | | | | | |
| 18 | 98507–05010 | SCREW, PAN HEAD | 1 | | | | | |
| 19 | BES–F4773–00–33 | HANDLE, SEAT | 1 | | | | | YB |
| 20 | 95D32–06020 | BOLT, FLANGE DEEP RECESS | 4 | | | | | |
| 21 | BES–F8100–00 | TOOL KIT | 1 | | | | | |

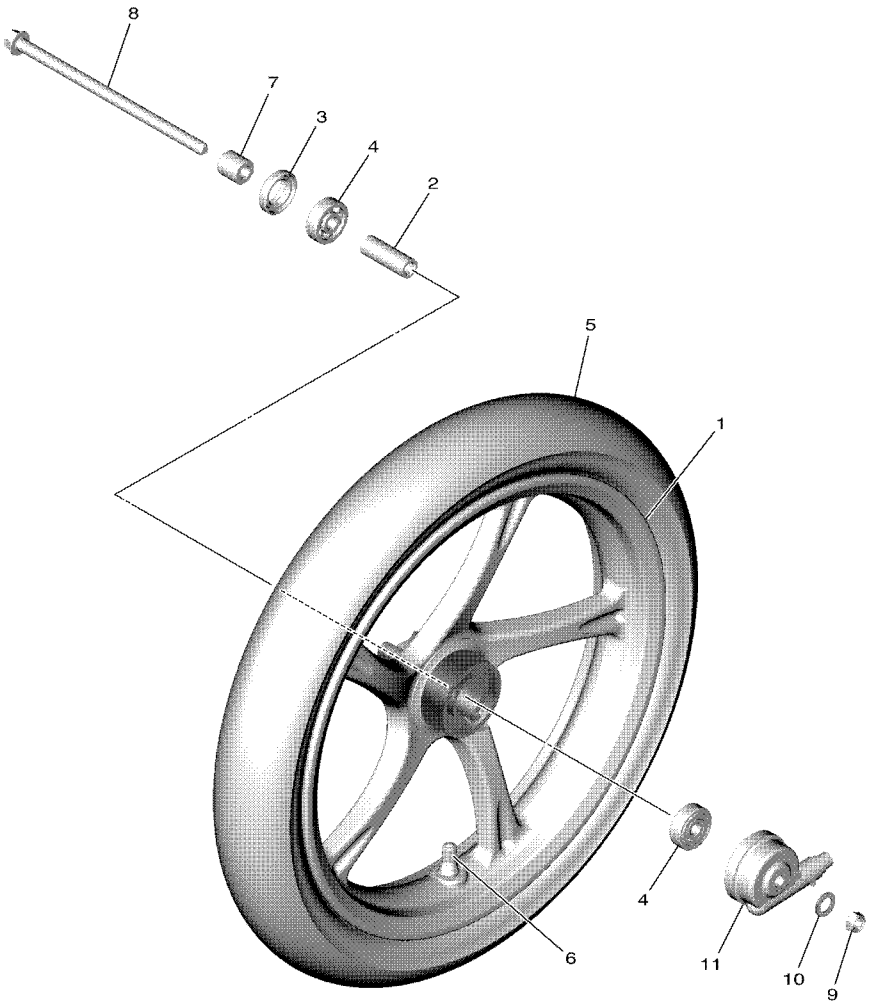


BES1440DW210

## FIG. 21 FRONT WHEEL

| REF. NO. | PART NO. | DESCRIPTION | BES2 | | | | | REMARKS |
|---|---|---|---|---|---|---|---|---|
| 1 | 1VB–F5168–00–33 | CAST WHEEL, FRONT | 1 | | | | | UR FOR LCM4,DNLGM1 |
| | 1VB–F5168–00–0X | CAST WHEEL, FRONT | 1 | | | | | UR FOR LLGS6 |
| 2 | 90560–10292 | SPACER | 1 | | | | | |
| 3 | 93106–20808 | OIL SEAL | 1 | | | | | |
| 4 | 93306–300YF | BEARING | 2 | | | | | |
| 5 | 94107–14808 | TIRE (70/90-14M/C 34P N) | 1 | | | | | KENDA |
| 6 | 93900–00817 | VALVE, RIM (TR412) | 1 | | | | | |
| 7 | 90387–10277 | COLLAR | 1 | | | | | |
| 8 | 2SX–F5181–00 | AXLE, WHEEL | 1 | | | | | |
| 9 | 90185–10012 | NUT, SELF-LOCKING | 1 | | | | | |
| 10 | 90201–10831 | WASHER, PLATE | 1 | | | | | |
| 11 | 5TL–F5190–01 | GEAR UNIT ASSY | 1 | | | | | |

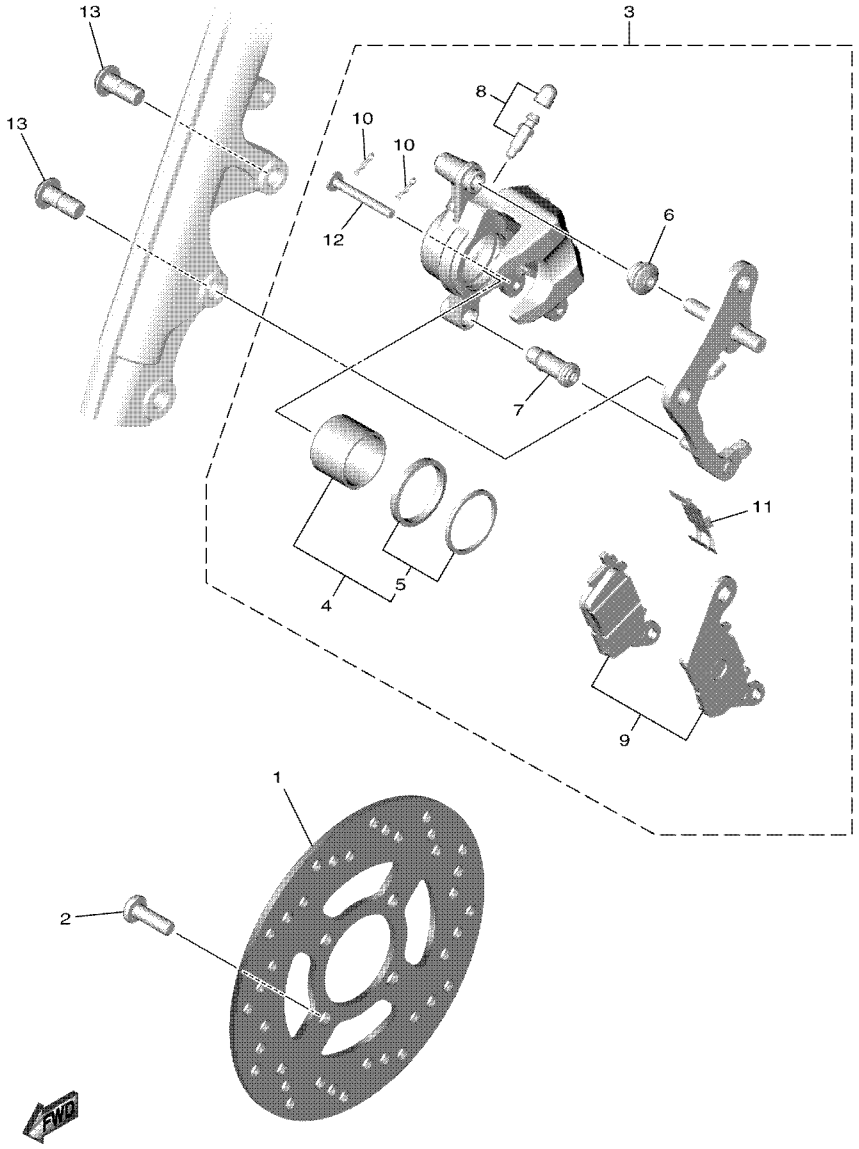

BES1440DW220

## FIG. 22 FRONT BRAKE CALIPER

| REF. NO. | PART NO. | DESCRIPTION | BES2 | | | | | REMARKS |
|---|---|---|---|---|---|---|---|---|
| 1 | BES–F582U–00 | DISK, BRAKE (RIGHT) | 1 | | | | | |
| 2 | 90111–08853 | BOLT, HEXAGON SOCKET BUTTON | 4 | | | | | |
| 3 | 2SX–F580U–10 | CALIPER ASSY (RIGHT) | 1 | | | | | |
| 4 | 2BM–F5802–00 | .PISTON ASSY, CALIPER | 1 | | | | | |
| 5 | 5YP–F5803–50 | ..CALIPER SEAL KIT | 1 | | | | | |
| 6 | 2BM–F5917–00 | .BOOT, CALIPER | 1 | | | | | |
| 7 | 5YP–F5937–00 | .BOOT 2 | 1 | | | | | |
| 8 | 4C9–W0048–00 | .BLEED SCREW KIT | 1 | | | | | |
| 9 | 2BM–F5805–00 | .BRAKE PAD KIT | 1 | | | | | |
| 10 | 5YP–F5925–01 | .CLIP | 2 | | | | | |
| 11 | 2BM–F5919–00 | .SUPPORT, PAD | 1 | | | | | |
| 12 | 5YP–F5924–10 | .PIN, PAD | 1 | | | | | |
| 13 | 90105–10831 | BOLT, FLANGE | 2 | | | | | |

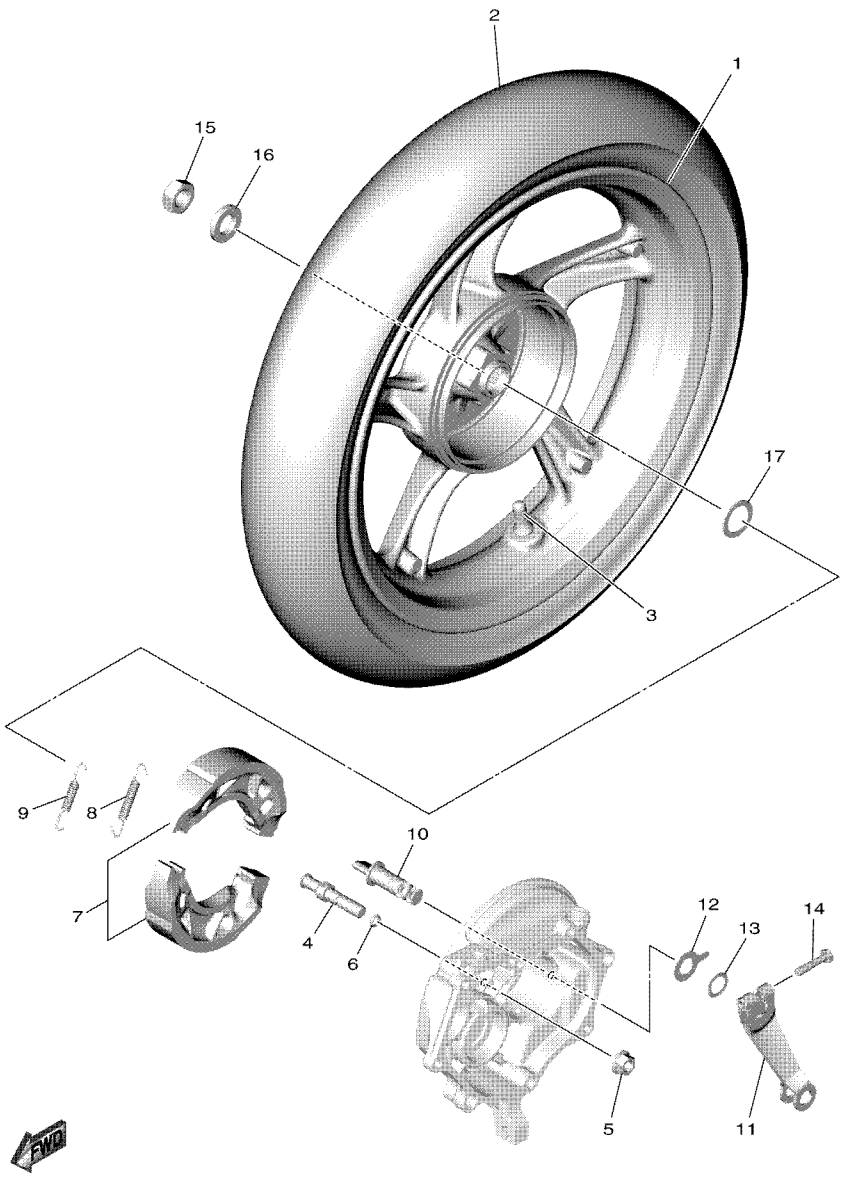


B3W1460DW230

## FIG. 23 REAR WHEEL

| REF. NO. | PART NO. | DESCRIPTION | BES2 | | | | | REMARKS |
|---|---|---|---|---|---|---|---|---|
| 1 | 44P–F5338–00–33 | CAST WHEEL, REAR | 1 | | | | | UR FOR LCM4,DNLGM1 |
| | 44P–F5338–00–0X | CAST WHEEL, REAR | 1 | | | | | UR FOR LLGS6 |
| 2 | 94109–14804 | TIRE(90/80-14M/C 49P REINF N) | 1 | | | | | KENDA |
| 3 | 93900–00817 | VALVE, RIM (TR412) | 1 | | | | | |
| 4 | 54P–F5326–00 | PIN, PIVOT | 1 | | | | | |
| 5 | 95702–10500 | NUT, FLANGE | 1 | | | | | |
| 6 | 93210–07802 | O-RING | 1 | | | | | |
| 7 | 5LW–F530K–00 | BRAKE SHOE SET | 1 | | | | | |
| 8 | 90506–12001 | SPRING, TENSION | 1 | | | | | |
| 9 | 90506–15001 | SPRING, TENSION | 1 | | | | | |
| 10 | 10C–F5351–00 | CAMSHAFT | 1 | | | | | |
| 11 | B92–F5355–00 | LEVER, CAMSHAFT | 1 | | | | | |
| 12 | 5LW–F533A–00 | PLATE, INDICATOR | 1 | | | | | |
| 13 | 90206–14093 | WASHER, WAVE | 1 | | | | | |
| 14 | 90101–06046 | BOLT | 1 | | | | | |
| 15 | 90185–16800 | NUT, SELF-LOCKING | 1 | | | | | |
| 16 | 90201–16810 | WASHER, PLATE | 1 | | | | | |
| 17 | 90201–220J8 | WASHER, PLATE | 1 | | | | | |

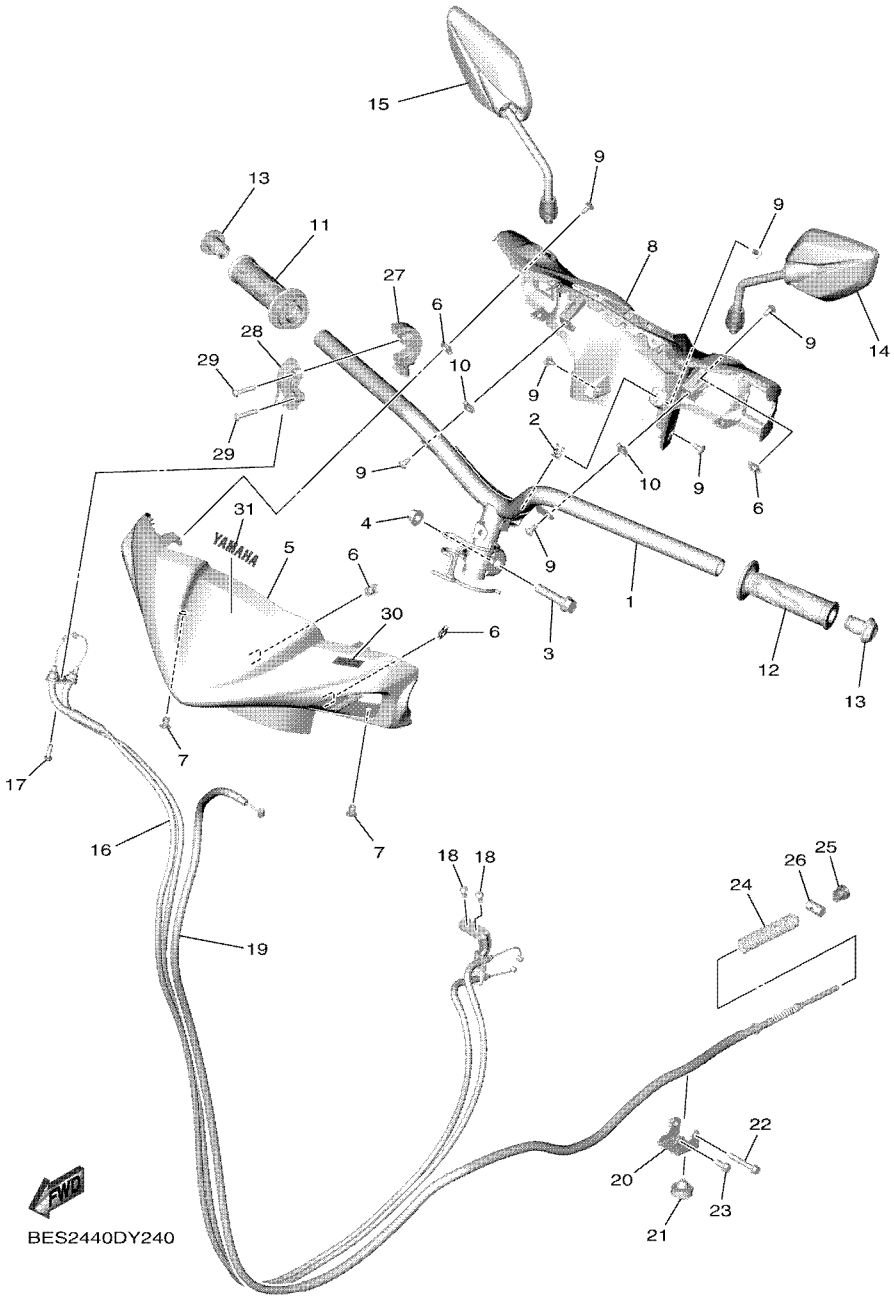


## FIG. 24 STEERING HANDLE & CABLE

| REF. NO. | PART NO. | DESCRIPTION | BES2 | | | | | REMARKS |
|---|---|---|---|---|---|---|---|---|
| 1 | BES–F6110–00 | HANDLE COMP. | 1 | | | | | |
| 2 | 90183–05807 | NUT, SPRING | 1 | | | | | |
| 3 | 90105–10896 | BOLT, FLANGE | 1 | | | | | |
| 4 | 90185–10011 | NUT, SELF-LOCKING | 1 | | | | | |
| 5 | BES–F6143–00–P3 | COVER, HANDLE UPPER 1 | 1 | | | | | UR FOR LCM4 |
| | BES–F6143–00–P4 | COVER, HANDLE UPPER 1 | 1 | | | | | UR FOR LLGS6 |
| | BES–F6143–00–P5 | COVER, HANDLE UPPER 1 | 1 | | | | | UR FOR DNLGM1 |
| 6 | 90183–05807 | NUT, SPRING | 4 | | | | | |
| 7 | 90269–06816 | RIVET | 2 | | | | | |
| 8 | BES–F6145–00 | COVER, HANDLE UPPER 2 | 1 | | | | | |
| 9 | 97707–50012 | SCREW, TRUSS HEAD TAPPING | 7 | | | | | |
| 10 | 90183–05807 | NUT, SPRING | 2 | | | | | |
| 11 | B92–F6240–00 | GRIP ASSY | 1 | | | | | |
| 12 | 1VP–F6241–00 | GRIP | 1 | | | | | |
| 13 | B92–F6246–00 | END, GRIP | 2 | | | | | |
| 14 | 2WB–F6280–00 | REAR VIEW MIRROR ASSY (LEFT) | 1 | | | | | |
| 15 | 2WB–F6290–00 | REAR VIEW MIRROR ASSY (RIGHT) | 1 | | | | | |
| 16 | BES–F6301–00 | THROTTLE CABLE ASSY | 1 | | | | | UR Either can use |
| | B3W–F6301–00 | THROTTLE CABLE ASSY | 1 | | | | | UR Either can use |
| | B3W–F6301–10 | THROTTLE CABLE ASSY | 1 | | | | | UR Either can use |
| 17 | 92012–05016 | BOLT, BUTTON HEAD | 1 | | | | | |
| 18 | 92012–05010 | BOLT, BUTTON HEAD | 2 | | | | | |
| 19 | 2SX–F6351–00 | CABLE, BRAKE | 1 | | | | | |
| 20 | B92–F637G–00 | HOLDER, WIRE | 1 | | | | | |
| 21 | B92–F6257–00 | STOPPER | 1 | | | | | |
| 22 | 95E32–06040 | BOLT, FLANGE DEEP RECESS | 1 | | | | | |
| 23 | 95E32–06014 | BOLT, FLANGE DEEP RECESS | 1 | | | | | |

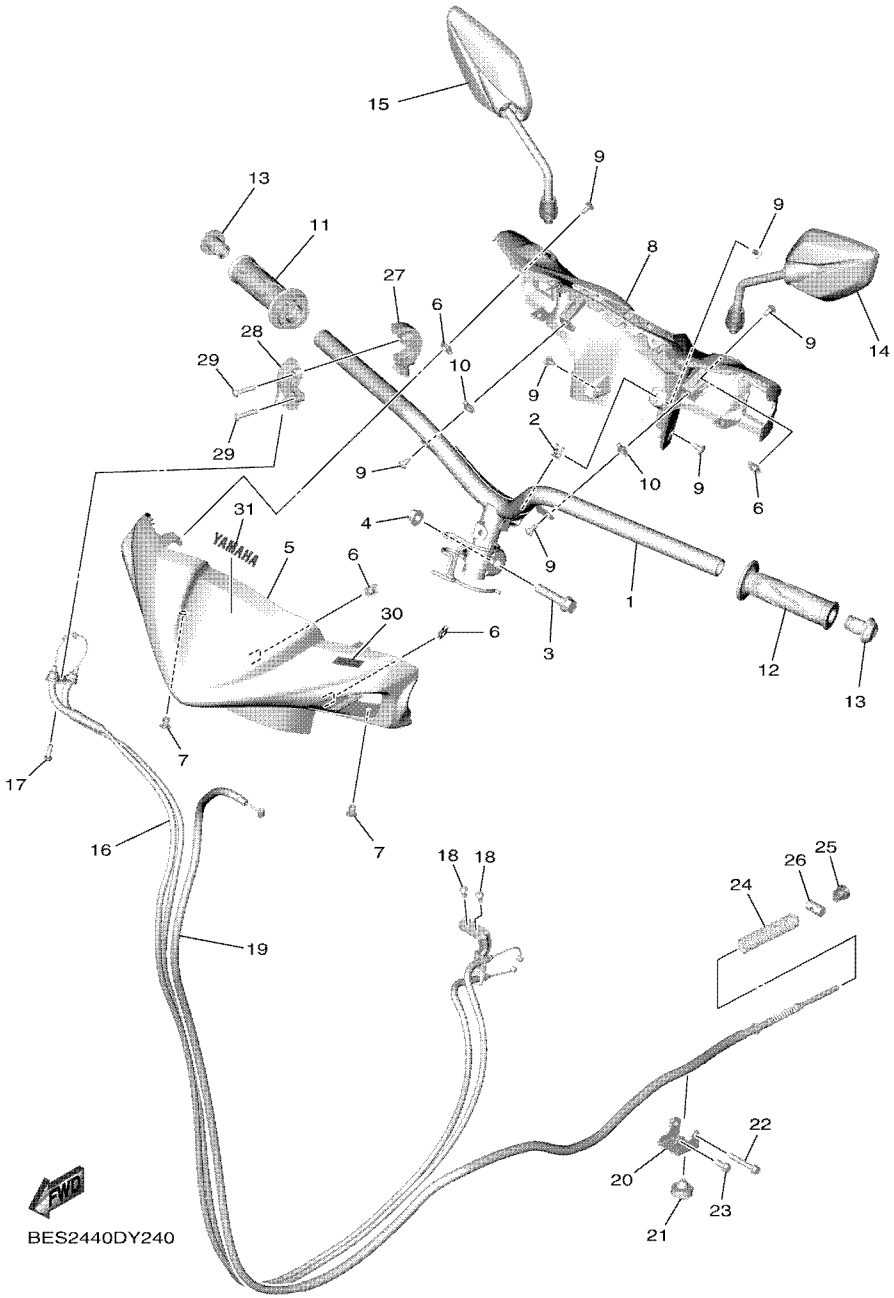


## FIG. 24 STEERING HANDLE & CABLE

| REF. NO. | PART NO. | DESCRIPTION | BES2 | | | | | REMARKS |
|---|---|---|---|---|---|---|---|---|
| 24 | 90501–16003 | SPRING, COMPRESSION | 1 | | | | | |
| 25 | 90179–06411 | NUT | 1 | | | | | |
| 26 | 90249–12008 | PIN | 1 | | | | | |
| 27 | 55D–F6281–00 | CAP, GRIP UPPER | 1 | | | | | |
| 28 | 55D–F6282–00 | CAP, GRIP UNDER | 1 | | | | | |
| 29 | 98502–05025 | SCREW, PAN HEAD | 2 | | | | | |
| 30 | B92–F1737–00 | EMBLEM | 1 | | | | | |
| 31 | 99237–00080 | EMBLEM, YAMAHA | 1 | | | | | |

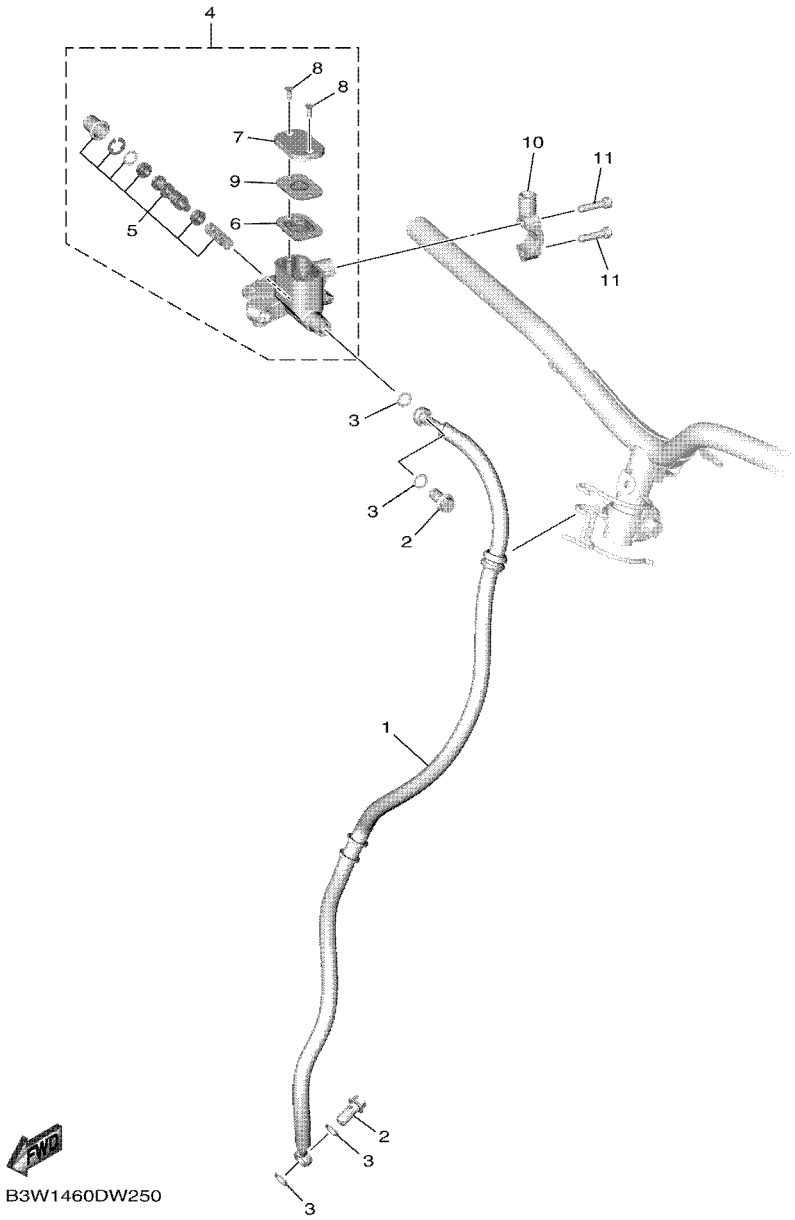


## FIG. 25 FRONT MASTER CYLINDER

| REF. NO. | PART NO. | DESCRIPTION | BES2 | | | | | REMARKS |
|---|---|---|---|---|---|---|---|---|
| 1 | 2SX–F5872–00 | HOSE, BRAKE 1 | 1 | | | | | |
| 2 | 90401–10015 | BOLT, UNION | 2 | | | | | |
| 3 | 90201–10118 | WASHER, PLATE | 4 | | | | | |
| 4 | 5P0–F5807–00 | MASTER CYLINDER SUB ASSY | 1 | | | | | |
| 5 | 5P0–F580A–00 | .CYLINDER KIT, MASTER | 1 | | | | | |
| 6 | 5P0–F5854–00 | .DIAPHRAGM, RESERVOIR | 1 | | | | | |
| 7 | 5P0–F5852–00 | .CAP, RESERVOIR | 1 | | | | | |
| 8 | 36Y–2589H–00 | .SCREW | 2 | | | | | |
| 9 | 5P0–F5855–00 | .BUSH,DIAPHRAGM | 1 | | | | | |
| 10 | B5D–F5867–00 | BRACKET, MASTER CYLINDER | 1 | | | | | |
| 11 | 91332–06025 | BOLT | 2 | | | | | |

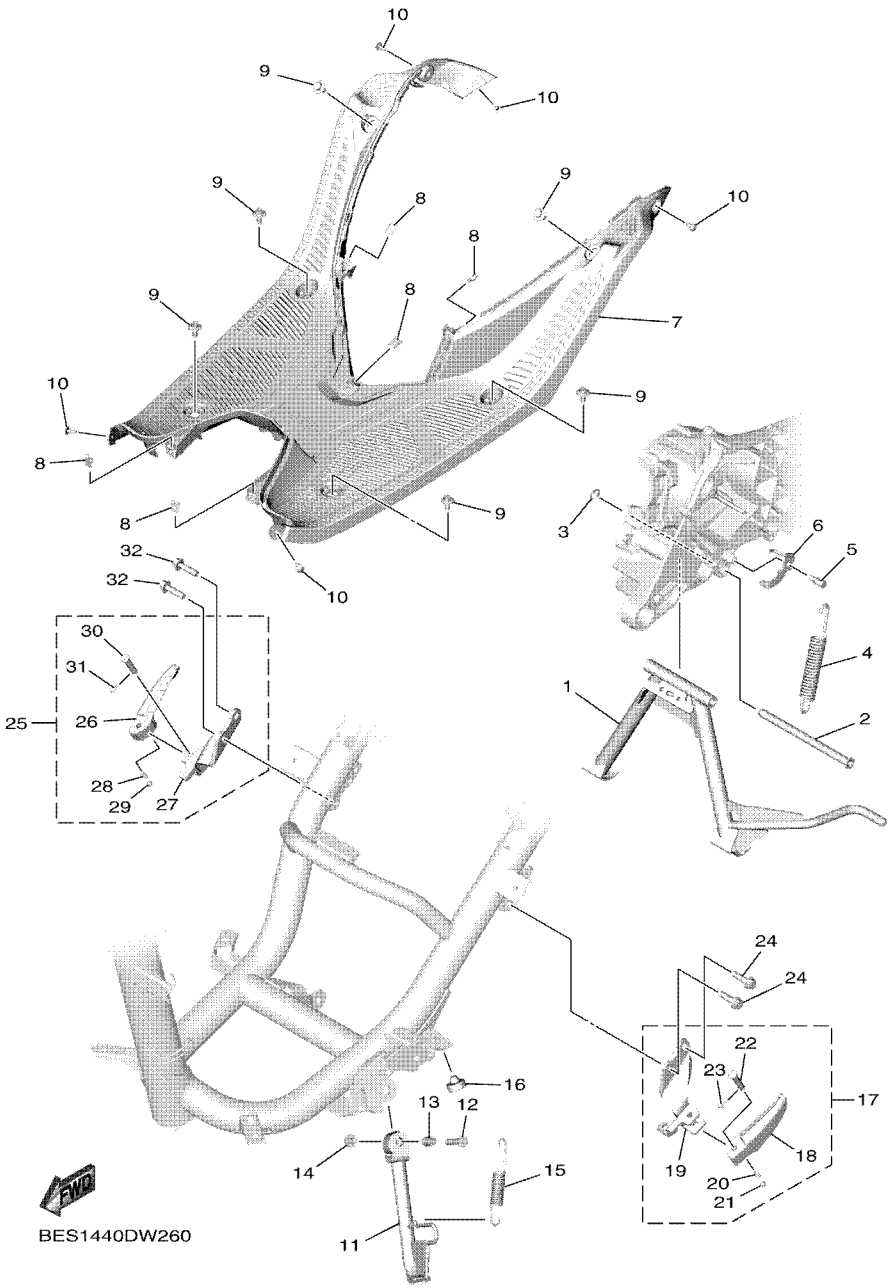


## FIG. 26 STAND & FOOTREST

| REF. NO. | PART NO. | DESCRIPTION | BES2 | | | | | REMARKS |
|---|---|---|---|---|---|---|---|---|
| 1 | BES–F7111–00 | STAND, MAIN | 1 | | | | | |
| 2 | 2PH–F7112–00 | SHAFT, MAIN STAND | 1 | | | | | |
| 3 | 99002–09600 | CIRCLIP | 1 | | | | | |
| 4 | 90506–35821 | SPRING, TENSION | 1 | | | | | |
| 5 | 5LW–F7254–00 | HOOK | 1 | | | | | |
| 6 | B92–F7267–00 | GUIDE, WIRE | 1 | | | | | |
| 7 | BES–F7481–00 | BOARD, FOOTREST | 1 | | | | | |
| 8 | 90183–05807 | NUT, SPRING | 5 | | | | | |
| 9 | 90109–068B5 | BOLT | 6 | | | | | |
| 10 | 97707–50012 | SCREW, TRUSS HEAD TAPPING | 9 | | | | | |
| 11 | BES–F7311–00 | STAND, SIDE | 1 | | | | | |
| 12 | 90101–08847 | BOLT | 1 | | | | | |
| 13 | 90387–08820 | COLLAR | 1 | | | | | |
| 14 | 95602–08200 | NUT, U FLANGE | 1 | | | | | |
| 15 | 90506–20514 | SPRING, TENSION | 1 | | | | | |
| 16 | B92–F6257–00 | STOPPER | 1 | | | | | |
| 17 | BES–F7430–00 | REAR FOOTREST ASSY 1 | 1 | | | | | |
| 18 | BES–F7431–00 | .FOOTREST, REAR 1 | 1 | | | | | |
| 19 | B92–F7432–00 | .BRACKET 1 | 1 | | | | | |
| 20 | 90501–12743 | .SPRING, COMPRESSION | 1 | | | | | |
| 21 | 93501–04823 | .BALL | 1 | | | | | |
| 22 | 91701–08035 | .PIN | 1 | | | | | |
| 23 | 91401–25015 | .PIN, COTTER | 1 | | | | | |
| 24 | 95D02–08030 | BOLT, FLANGE DEEP RECESS | 2 | | | | | |
| 25 | BES–F7440–00 | REAR FOOTREST ASSY 2 | 1 | | | | | |
| 26 | BES–F7441–00 | .FOOTREST, REAR 2 | 1 | | | | | |
| 27 | B92–F7442–00 | .BRACKET 2 | 1 | | | | | |

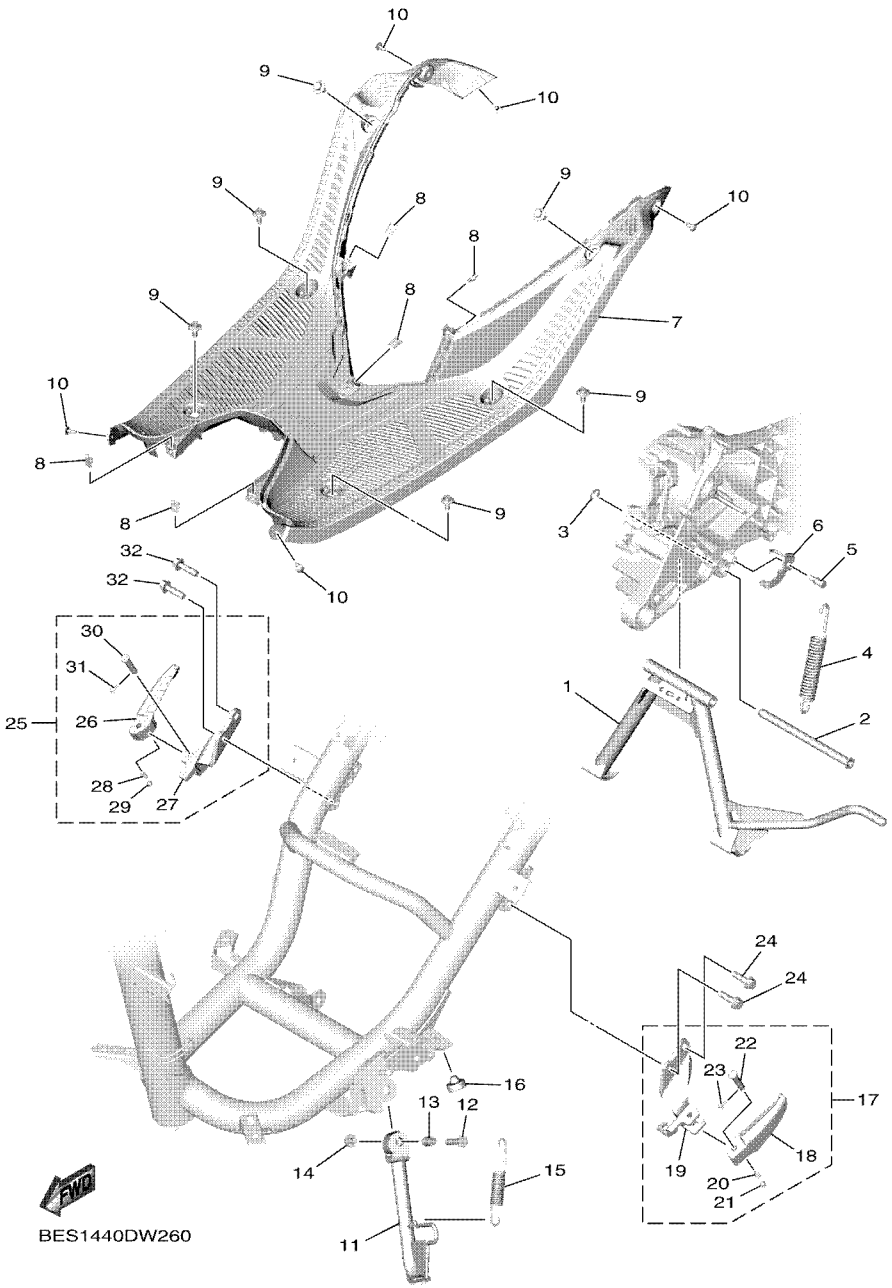


## FIG. 26 STAND & FOOTREST

| REF. NO. | PART NO. | DESCRIPTION | BES2 | | | | | REMARKS |
|---|---|---|---|---|---|---|---|---|
| 28 | 90501–12743 | .SPRING, COMPRESSION | 1 | | | | | |
| 29 | 93501–04823 | .BALL | 1 | | | | | |
| 30 | 91701–08035 | .PIN | 1 | | | | | |
| 31 | 91401–25015 | .PIN, COTTER | 1 | | | | | |
| 32 | 95D02–08030 | BOLT, FLANGE DEEP RECESS | 2 | | | | | |

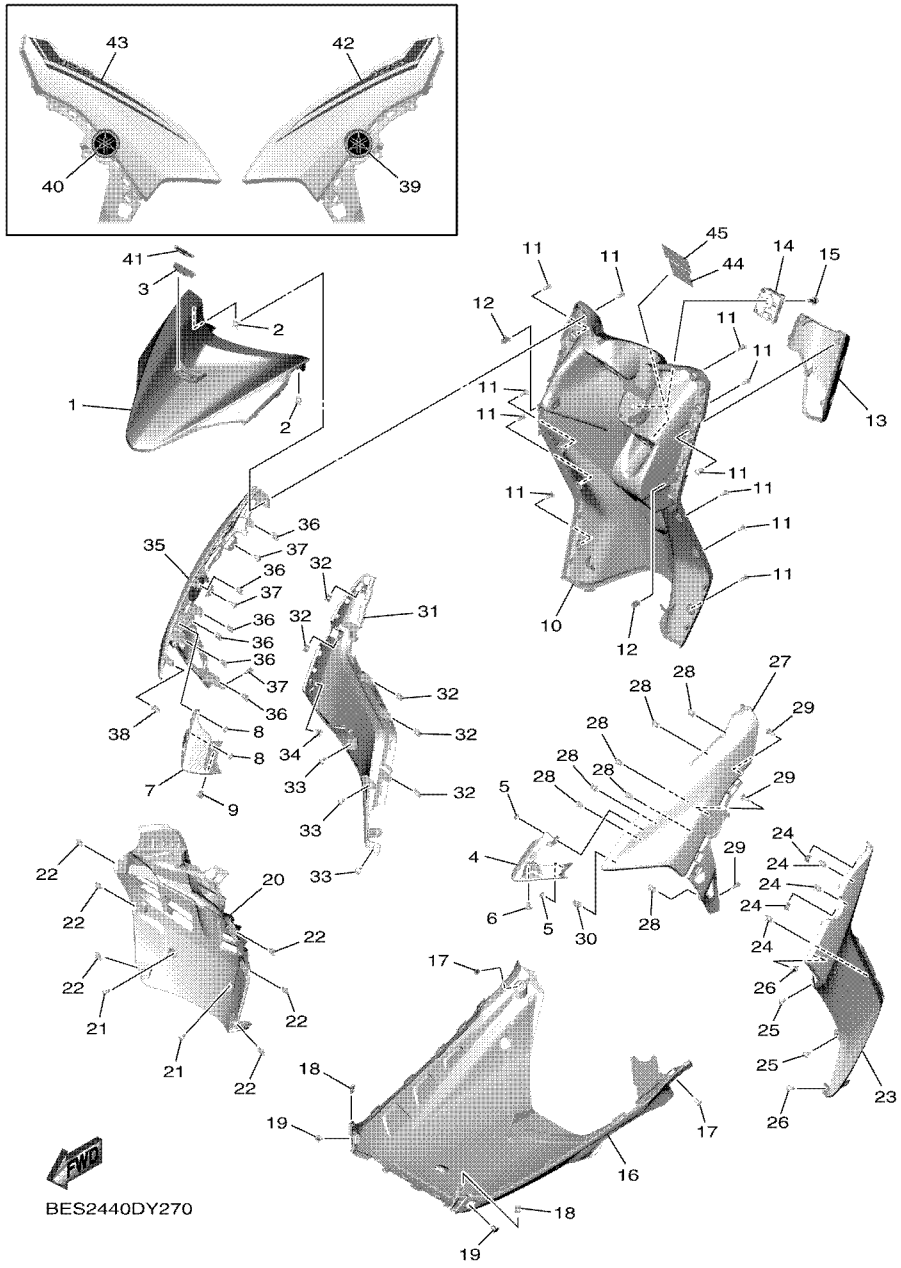


## FIG. 27 LEG SHIELD

| REF. NO. | PART NO. | DESCRIPTION | BES2 | | | | | REMARKS |
|---|---|---|---|---|---|---|---|---|
| 1 | B3W–F8311–01 | LEG SHIELD 1 | 1 | | | | | |
| 2 | 90183–05807 | NUT, SPRING | 2 | | | | | |
| 3 | BB3–F8309–00 | GRILLE, FRONT | 1 | | | | | |
| 4 | BES–F838D–01 | COVER, HEADLIGHT 1 | 1 | | | | | |
| 5 | 90183–04005 | NUT, SPRING | 2 | | | | | |
| 6 | 90269–06816 | RIVET | 1 | | | | | |
| 7 | BES–F838S–01 | COVER, HEADLIGHT 2 | 1 | | | | | |
| 8 | 90183–04005 | NUT, SPRING | 2 | | | | | |
| 9 | 90269–06816 | RIVET | 1 | | | | | |
| 10 | BES–F8312–01 | LEG SHIELD 2 | 1 | | | | | |
| 11 | 97707–50016 | SCREW, TRUSS HEAD TAPPING | 14 | | | | | |
| 12 | 90464–07018 | CLAMP | 2 | | | | | |
| 13 | BES–F836K–01 | PANEL, INNER 1 | 1 | | | | | |
| 14 | 2BM–F8379–00 | HOOK | 1 | | | | | |
| 15 | 90109–06265 | BOLT | 1 | | | | | |
| 16 | BES–F8385–01 | COVER, LOWER | 1 | | | | | |
| 17 | 97707–50012 | SCREW, TRUSS HEAD TAPPING | 2 | | | | | |
| 18 | 90183–05807 | NUT, SPRING | 2 | | | | | |
| 19 | 90269–06816 | RIVET | 2 | | | | | |
| 20 | BES–F1552–01 | FENDER, INNER | 1 | | | | | |
| 21 | 97707–50012 | SCREW, TRUSS HEAD TAPPING | 2 | | | | | |
| 22 | 90183–05807 | NUT, SPRING | 6 | | | | | |
| 23 | BES–F8345–01 | MOLE 1 | 1 | | | | | |
| 24 | 90183–05807 | NUT, SPRING | 5 | | | | | |
| 25 | 97707–50012 | SCREW, TRUSS HEAD TAPPING | 3 | | | | | |
| 26 | 90464–04801 | CLAMP | 1 | | | | | |
| 27 | BES–F835U–00–WN | PANEL 1 | 1 | | | | | UR FOR LCM4 |

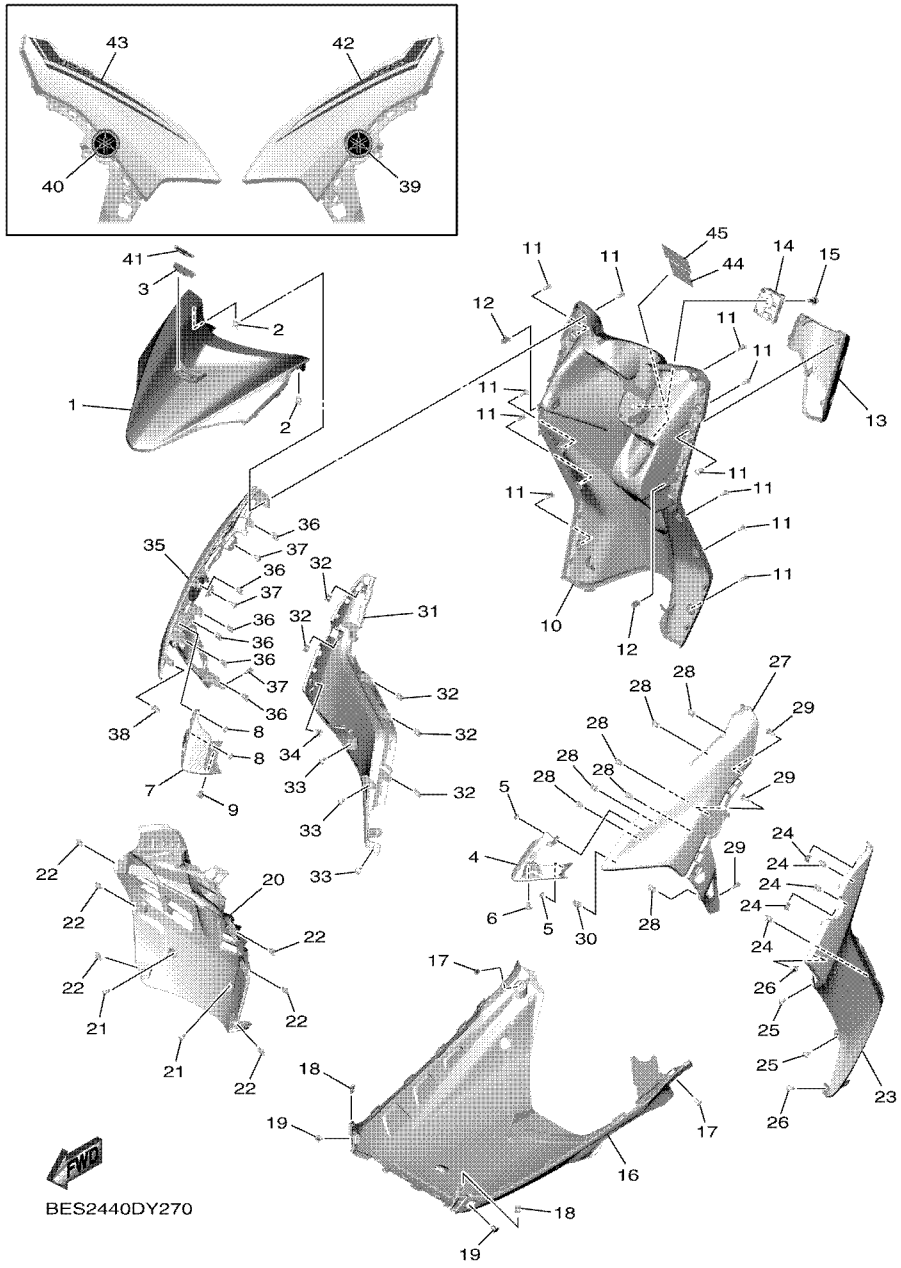


## FIG. 27 LEG SHIELD

| REF. NO. | PART NO. | DESCRIPTION | BES2 | | | | | REMARKS |
|---|---|---|---|---|---|---|---|---|
| 27 | BES–F835U–00–P3 | PANEL 1 | 1 | | | | | UR FOR LLGS6 |
| | BES–F835U–00–P4 | PANEL 1 | 1 | | | | | UR FOR DNLGM1 |
| 28 | 90183–05807 | NUT, SPRING | 7 | | | | | |
| 29 | 97707–50016 | SCREW, TRUSS HEAD TAPPING | 3 | | | | | |
| 30 | 90464–07018 | CLAMP | 1 | | | | | |
| 31 | BES–F8346–01 | MOLE 2 | 1 | | | | | |
| 32 | 90183–05807 | NUT, SPRING | 5 | | | | | |
| 33 | 97707–50012 | SCREW, TRUSS HEAD TAPPING | 3 | | | | | |
| 34 | 90464–04801 | CLAMP | 1 | | | | | |
| 35 | BES–F835V–00–WN | PANEL 2 | 1 | | | | | UR FOR LCM4 |
| | BES–F835V–00–P3 | PANEL 2 | 1 | | | | | UR FOR LLGS6 |
| | BES–F835V–00–P4 | PANEL 2 | 1 | | | | | UR FOR DNLGM1 |
| 36 | 90183–05807 | NUT, SPRING | 7 | | | | | |
| 37 | 97707–50016 | SCREW, TRUSS HEAD TAPPING | 3 | | | | | |
| 38 | 90464–07018 | CLAMP | 1 | | | | | |
| 39 | 5P2–F839B–00 | EMBLEM 3D | 1 | | | | | |
| 40 | 5P2–F839B–00 | EMBLEM 3D | 1 | | | | | |
| 41 | BES–F83E1–00 | EMBLEM 3 | 1 | | | | | |
| 42 | BES–F8391–30 | GRAPHIC 1 | 1 | | | | | UR FOR LCM4 |
| | BES–F8391–40 | GRAPHIC 1 | 1 | | | | | UR FOR LLGS6 |
| | BES–F8391–50 | GRAPHIC 1 | 1 | | | | | UR FOR DNLGM1 |
| 43 | BES–F8392–30 | GRAPHIC 2 | 1 | | | | | UR FOR LCM4 |
| | BES–F8392–40 | GRAPHIC 2 | 1 | | | | | UR FOR LLGS6 |
| | BES–F8392–50 | GRAPHIC 2 | 1 | | | | | UR FOR DNLGM1 |
| 44 | BF4–F1568–00 | LABEL, WARNING | 1 | | | | | |
| 45 | B92–F1668–00 | LABEL, TIRE | 1 | | | | | |

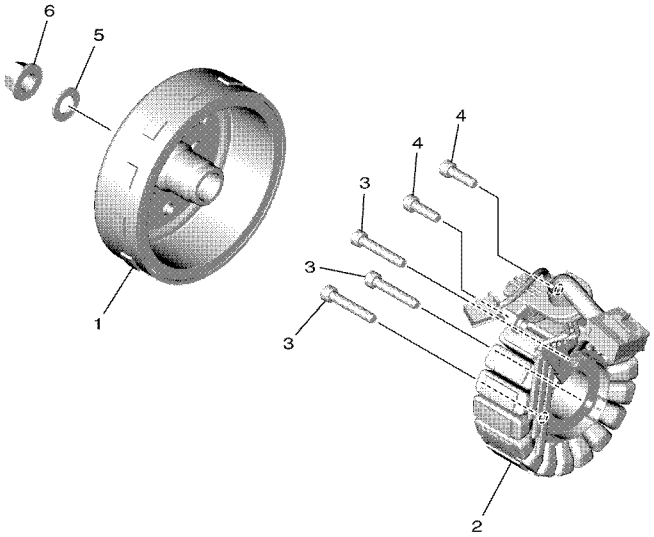

B3W1460DW280

## FIG. 28 GENERATOR

| REF. NO. | PART NO. | DESCRIPTION | BES2 | | | | | REMARKS |
|---|---|---|---|---|---|---|---|---|
| 1 | B5D–H1450–00 | ROTOR ASSY | 1 | | | | | |
| 2 | B5D–H1410–11 | STATOR ASSY | 1 | | | | | |
| 3 | 91332–06035 | BOLT | 3 | | | | | |
| 4 | 91332–06020 | BOLT | 2 | | | | | |
| 5 | 90201–12823 | WASHER, PLATE | 1 | | | | | |
| 6 | 90179–12004 | NUT | 1 | | | | | |

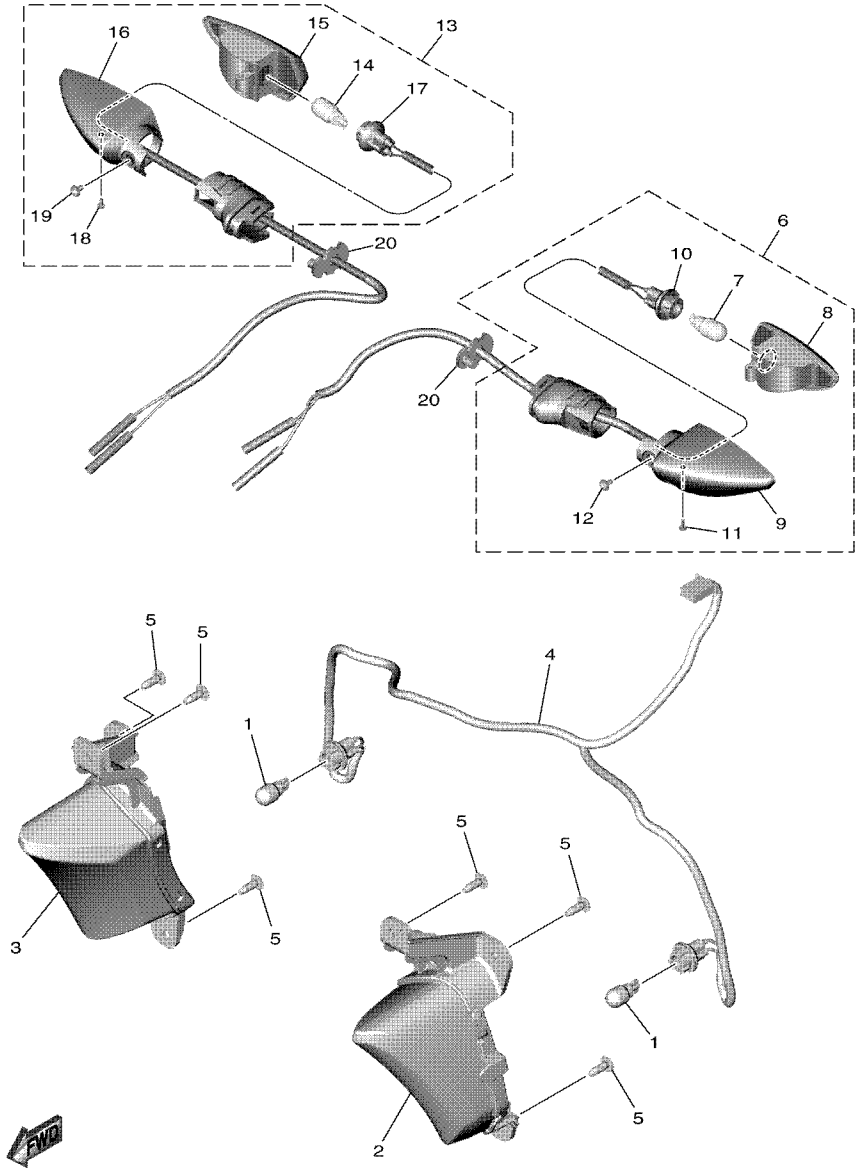

BES1440DW290

## FIG. 29 FLASHER LIGHT

| REF. NO. | PART NO. | DESCRIPTION | BES2 | | | | | REMARKS |
|---|---|---|---|---|---|---|---|---|
| 1 | 55D–H3311–00 | BULB, FLASHER (12V-10W) | 2 | | | | | |
| 2 | BES–H3310–00 | FRONT FLASHER LIGHT ASSY 1 | 1 | | | | | |
| 3 | BES–H3320–00 | FRONT FLASHER LIGHT ASSY 2 | 1 | | | | | |
| 4 | BES–H331E–00 | CORD ASSY | 1 | | | | | |
| 5 | 97707–50016 | SCREW, TRUSS HEAD TAPPING | 6 | | | | | |
| 6 | 55D–H3330–01 | REAR FLASHER LIGHT ASSY 1 | 1 | | | | | |
| 7 | 55D–H3311–00 | .BULB, FLASHER (12V-10W) | 1 | | | | | |
| 8 | 55D–H333A–00 | .LENS COMP 1 | 1 | | | | | |
| 9 | 55D–H3323–00 | .BODY | 1 | | | | | |
| 10 | 55D–H333E–01 | .CORD ASSY | 1 | | | | | |
| 11 | 55D–H3333–00 | .SCREW, LENS FITTING | 1 | | | | | |
| 12 | 55D–H3358–00 | .SCREW, SPECIAL | 1 | | | | | |
| 13 | 55D–H3340–01 | REAR FLASHER LIGHT ASSY 2 | 1 | | | | | |
| 14 | 55D–H3311–00 | .BULB, FLASHER (12V-10W) | 1 | | | | | |
| 15 | 55D–H334A–00 | .LENS COMP 2 | 1 | | | | | |
| 16 | 55D–H332M–00 | .BODY 2 | 1 | | | | | |
| 17 | 55D–H334E–01 | .CORD ASSY | 1 | | | | | |
| 18 | 55D–H3333–00 | .SCREW, LENS FITTING | 1 | | | | | |
| 19 | 55D–H3358–00 | .SCREW, SPECIAL | 1 | | | | | |
| 20 | 1VP–H3318–00 | STAY, FLASHER 1 | 2 | | | | | |

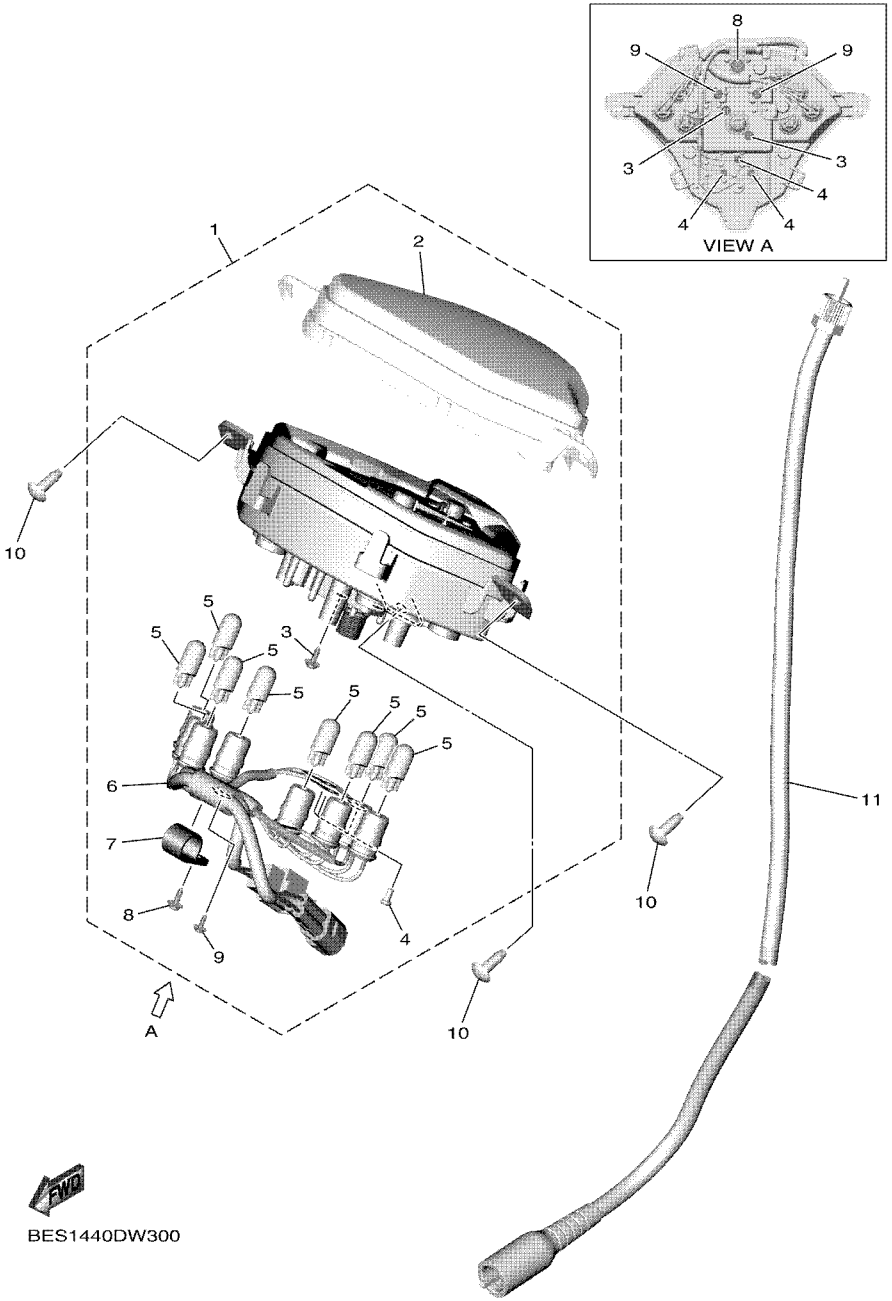


## FIG. 30 METER

| REF. NO. | PART NO. | DESCRIPTION | BES2 | | | | | REMARKS |
|---|---|---|---|---|---|---|---|---|
| 1 | BES–H3510–00 | SPEEDOMETER ASSY | 1 | | | | | |
| 2 | BES–H3511–00 | .LENS, SPEEDOMETER | 1 | | | | | |
| 3 | 1VP–H3358–00 | .SCREW, SPECIAL | 2 | | | | | |
| 4 | 1VP–H3645–00 | .SCREW | 3 | | | | | |
| 5 | 5LW–H3518–00 | .BULB, METER (T10 12V-1.7W) | 8 | | | | | |
| 6 | BES–H3509–00 | .SOCKET CORD ASSY | 1 | | | | | |
| 7 | 1VP–H357E–00 | .CLAMP | 1 | | | | | |
| 8 | 97702–40012 | .SCREW, TAPPING | 1 | | | | | |
| 9 | 1VB–H652Y–00 | .SCREW | 2 | | | | | |
| 10 | 97707–50016 | SCREW, TRUSS HEAD TAPPING | 3 | | | | | |
| 11 | 2BR–H3550–00 | SPEEDOMETER CABLE ASSY | 1 | | | | | |

## FIG. 31 HEADLIGHT

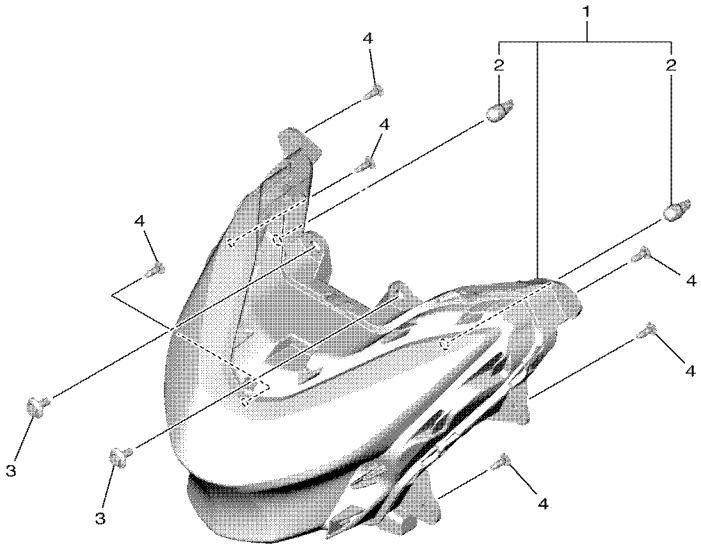


B3W1460DW310

| REF. NO. | PART NO. | DESCRIPTION | BES2 | | | | | REMARKS |
|---|---|---|---|---|---|---|---|---|
| 1 | BES–H4300–00 | HEADLIGHT ASSY | 1 | | | | | |
| 2 | 31B–H5353–00 | .BULB (12V-5W) | 2 | | | | | |
| 3 | 90109–068B5 | BOLT | 2 | | | | | |
| 4 | 97707–50016 | SCREW, TRUSS HEAD TAPPING | 6 | | | | | |

## FIG. 32 TAILLIGHT

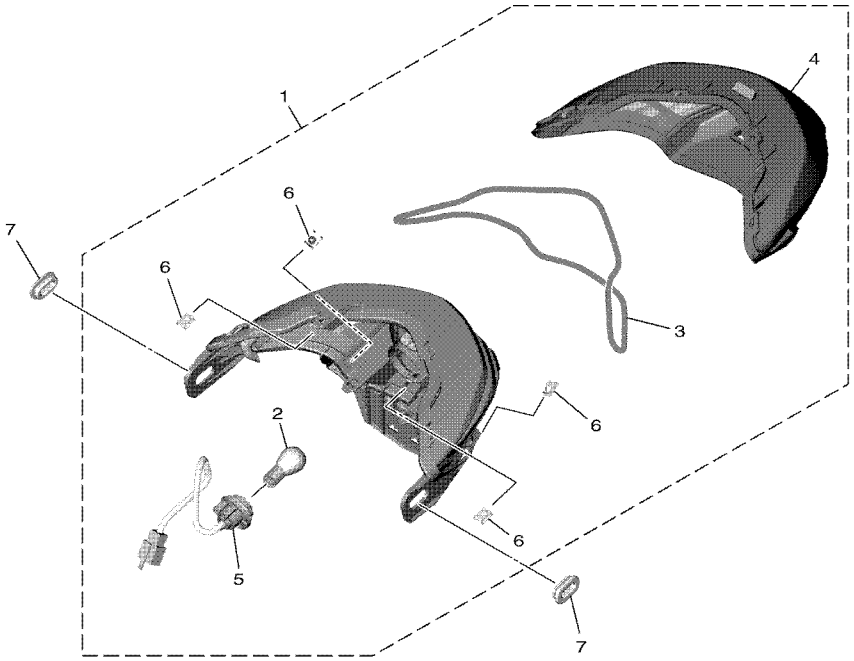

BES1440DW320

| REF. NO. | PART NO. | DESCRIPTION | BES2 | | | | | REMARKS |
|---|---|---|---|---|---|---|---|---|
| 1 | BES–H4710–00 | TAILLIGHT UNIT ASSY | 1 | | | | | |
| 2 | 1VP–H4714–00 | .BULB, TAILLIGHT (12V-21/5W) | 1 | | | | | |
| 3 | BES–H4723–00 | .GASKET, TAIL LENS | 1 | | | | | |
| 4 | BES–H4721–00 | .LENS, TAILLIGHT | 1 | | | | | |
| 5 | BES–H4735–00 | .SOCKET CORD ASSY | 1 | | | | | |
| 6 | 90183–05807 | .NUT, SPRING | 4 | | | | | |
| 7 | BES–H4759–00 | GROMMET | 2 | | | | | |

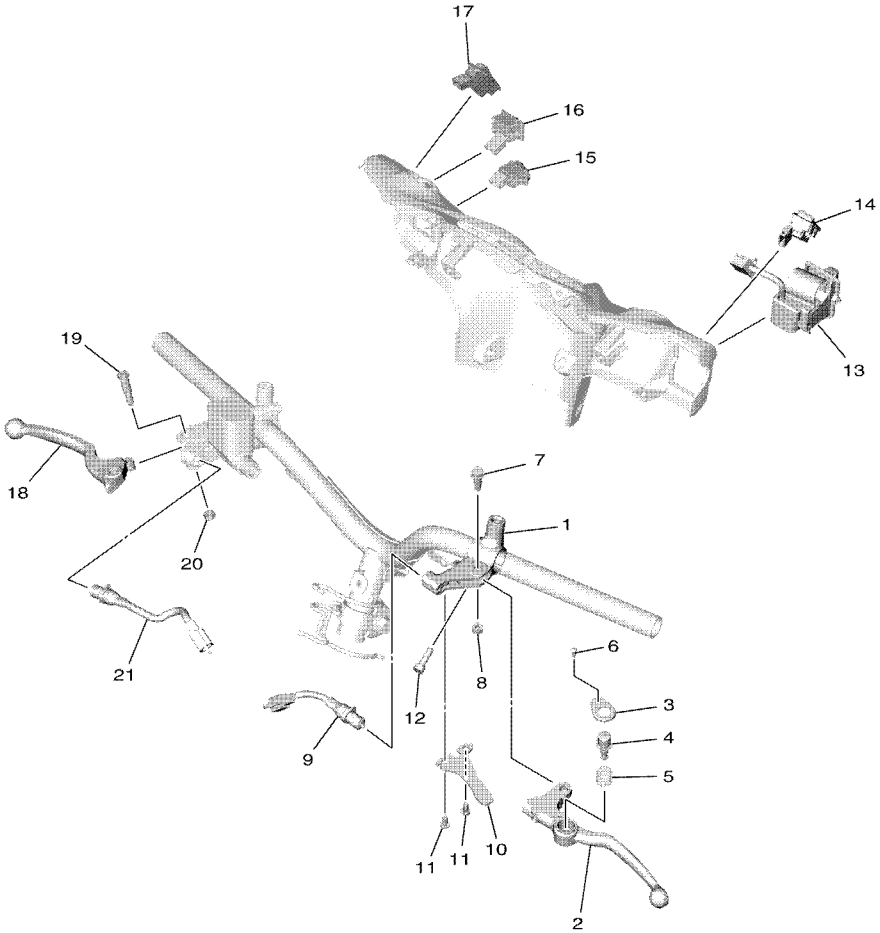

BES1440DW330

## FIG. 33 HANDLE SWITCH & LEVER

| REF. NO. | PART NO. | DESCRIPTION | BES2 | | | | | REMARKS |
|---|---|---|---|---|---|---|---|---|
| 1 | 1LB–H2911–20 | HOLDER, LEVER 1 | 1 | | | | | |
| 2 | 1LB–H3912–00 | LEVER 1 | 1 | | | | | |
| 3 | 1LB–H3935–00 | COVER | 1 | | | | | |
| 4 | 1LB–H3967–00 | PIN, LOCK 1 | 1 | | | | | |
| 5 | 40D–H3962–00 | SPRING | 1 | | | | | |
| 6 | 40D–H396X–00 | SCREW, LEVER FITTING | 1 | | | | | |
| 7 | 90109–06798 | BOLT | 1 | | | | | |
| 8 | 95602–06100 | NUT, SELF-LOCKING | 1 | | | | | |
| 9 | 1LB–H3980–00 | FRONT STOP SWITCH ASSY | 1 | | | | | |
| 10 | 1LB–H2556–00 | DAMPER, STOPPER | 1 | | | | | |
| 11 | 98502–05010 | SCREW, PAN HEAD | 2 | | | | | |
| 12 | 91332–06020 | BOLT | 1 | | | | | |
| 13 | B5D–H3975–00 | SWITCH, HANDLE 2 | 1 | | | | | |
| 14 | B5D–H276A–00 | DIMMER SWITCH COMP. | 1 | | | | | |
| 15 | B5D–H279A–00 | STARTER SWITCH COMP. | 1 | | | | | |
| 16 | B5D–H3362–00 | HAZARD FLASHER SWITCH | 1 | | | | | |
| 17 | B5D–H277A–00 | IDELE STOP SW.COMP | 1 | | | | | |
| 18 | 5TL–H3922–00 | LEVER 2 | 1 | | | | | |
| 19 | 90109–06255 | BOLT | 1 | | | | | |
| 20 | 95602–06100 | NUT, SELF-LOCKING | 1 | | | | | |
| 21 | 54P–H3980–00 | FRONT STOP SWITCH ASSY | 1 | | | | | |

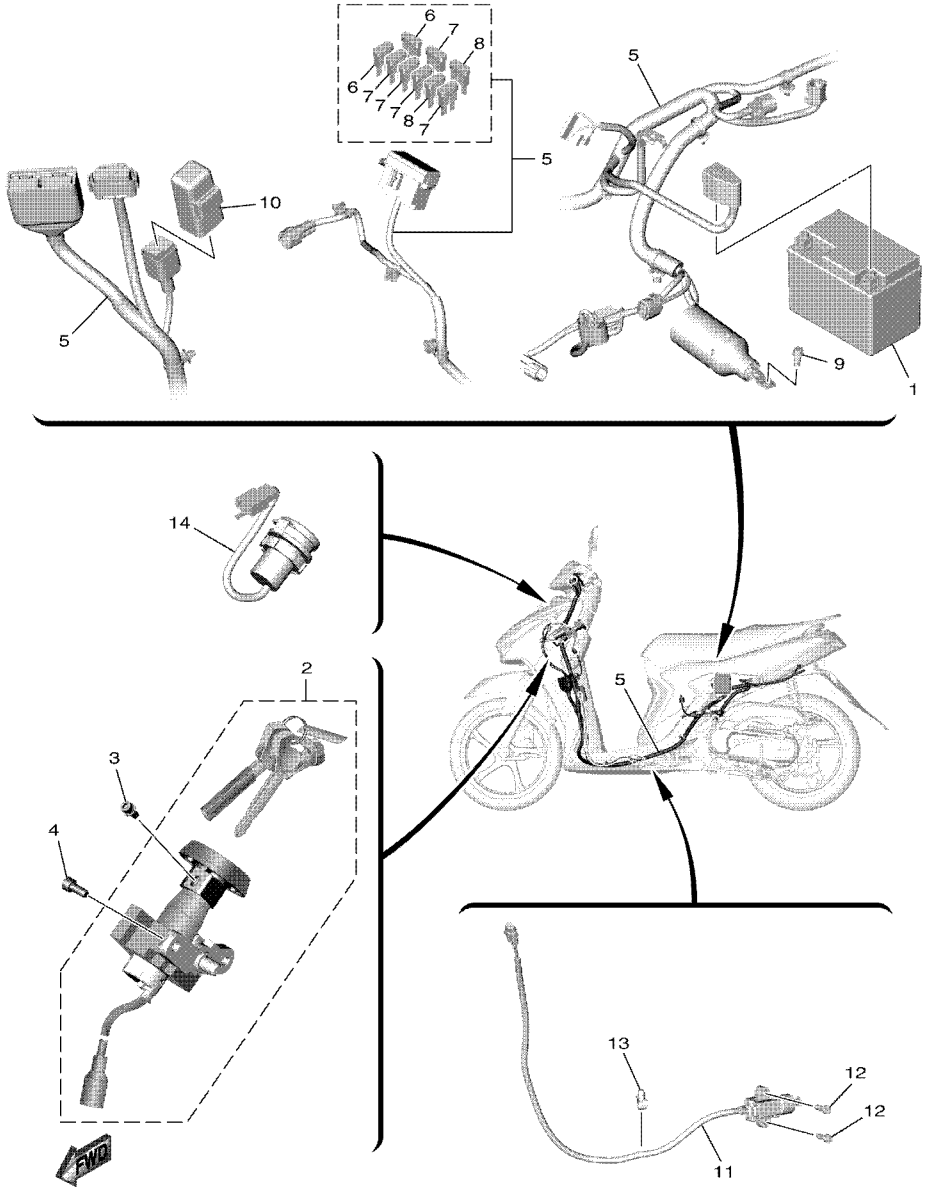


BES1440DW340

## FIG. 34 ELECTRICAL 1

| REF. NO. | PART NO. | DESCRIPTION | BES2 | | | | | REMARKS |
|---|---|---|---|---|---|---|---|---|
| 1 | BBM–H2100–00 | BATTERY ASSY (YUASA YTZ6V) | 1 | | | | | |
| 2 | BES–XH250–00 | MAIN SW. STRG. LOCK SUB ASSY | 1 | | | | | |
| 3 | 97602–05208 | SCREW, PAN HEAD WITH WASHER | 1 | | | | | |
| 4 | 90111–06162 | BOLT, HEXAGON SOCKET BUTTON | 2 | | | | | |
| 5 | BES–H2590–00 | WIRE HARNESS ASSY | 1 | | | | | |
| 6 | BAX–H2151–90 | .FUSE (5A) | 2 | | | | | |
| 7 | BES–H2151–00 | .FUSE (7.5A) | 5 | | | | | |
| 8 | BAX–H2151–20 | .FUSE (20A) | 2 | | | | | |
| 9 | 95E32–06012 | BOLT, FLANGE DEEP RECESS | 1 | | | | | |
| 10 | 5TP–H1940–00 | STARTER RELAY ASSY | 1 | | | | | |
| 11 | 1LB–H2566–01 | SWITCH, SIDE STAND | 1 | | | | | |
| 12 | 91312–05016 | BOLT, HEXAGON SOCKET HEAD | 2 | | | | | |
| 13 | 90464–07805 | CLAMP | 1 | | | | | |
| 14 | B6H–H254B–00 | TERMINAL COMP. | 1 | | | | | |

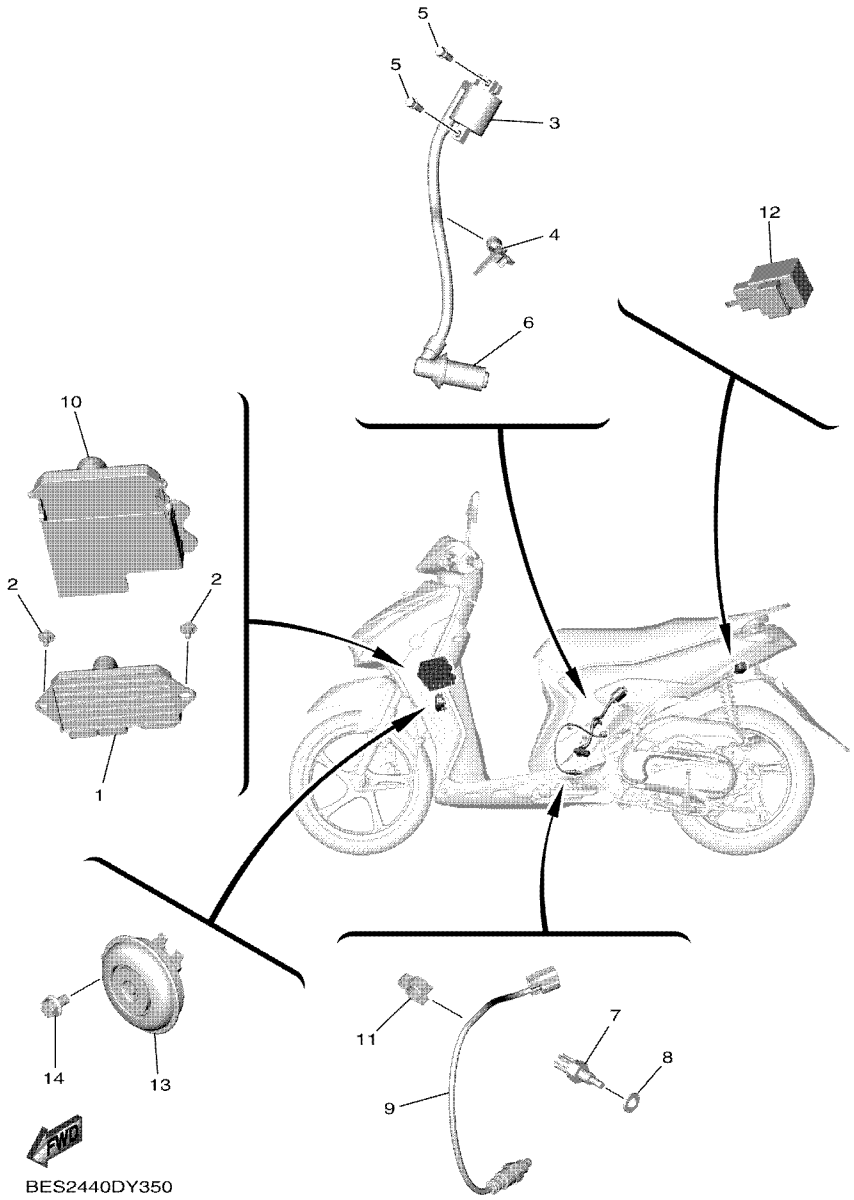


## FIG. 35 ELECTRICAL 2

| REF. NO. | PART NO. | DESCRIPTION | BES2 | | | | | REMARKS |
|---|---|---|---|---|---|---|---|---|
| 1 | B3W–H594A–10 | STARTER GEN. CONT. UNIT ASSY | 1 | | | | | |
| 2 | 90109–068B4 | BOLT | 2 | | | | | |
| 3 | 2PH–H2310–01 | IGNITION COIL ASSY | 1 | | | | | |
| 4 | 90464–12810 | CLAMP | 1 | | | | | |
| 5 | 95E32–06016 | BOLT, FLANGE DEEP RECESS | 2 | | | | | |
| 6 | 2PH–H2370–10 | PLUG CAP ASSY | 1 | | | | | |
| 7 | 52B–H3591–00 | THERMO UNIT | 1 | | | | | |
| 8 | 90430–10806 | GASKET | 1 | | | | | |
| 9 | 2DP–H592A–20 | SENSOR, OXYGEN | 1 | | | | | |
| 10 | B3W–H246B–00 | COVER 1 | 1 | | | | | |
| 11 | 90464–16807 | CLAMP | 1 | | | | | |
| 12 | 3XV–83350–22 | FLASHER RELAY ASSY | 1 | | | | | |
| 13 | 2PH–H3371–00 | HORN | 1 | | | | | |
| 14 | 95D02–06010 | BOLT, FLANGE DEEP RECESS | 1 | | | | | |

| PART NO. | REF. NO. |
|---|---|
| 1PM–14216–00 | 7 – 19 |
| 36Y–2589H–00 | 25 – 8 |
| 3XV–83350–22 | 35 – 12 |
| BES–E1102–00 | 1 – 1 |
| B7J–E111F–00 | 4 – 4 |
| 2PH–E112F–00 | 4 – 5 |
| 1DR–E1133–10 | 1 – 2 |
| B5D–E1166–00 | 7 – 37 |
| 2TS–E1181–00 | 1 – 12 |
| B5D–E1191–01 | 1 – 7 |
| B5D–E1193–00 | 1 – 9 |
| 2PH–E1311–10 | 1 – 16 |
| B5D–E1351–00 | 1 – 17 |
| BES–E1400–00 | 2 – 1 |
| B5D–E1422–00 | 2 – 5 |
| 2PH–E1603–10 | 2 – 13 |
| 2PH–E1631–00 | 2 – 10 |
| 2PH–E1633–00 | 2 – 11 |
| 2PH–E1651–20 | 2 – 4 |
| 2BM–E1681–10 | 2 – 2 |
| 2PH–E2111–00 | 3 – 1 |
| B5D–E2113–10 | 3 – 4 |
| 2DP–E2117–00 | 3 – 6 |
| B63–E2117–01 | 3 – 6 |
| 5TL–E2118–00 | 3 – 5 |
| 54P–E2119–00 | 3 – 3 |
| B5D–E2121–00 | 3 – 2 |
| 50C–E2126–00 | 3 – 7 |
| 2PH–E2146–00 | 3 – 11 |
| 2PH–E2151–02 | 3 – 8 |
| B5D–E2157–00 | 4 – 16 |
| 33S–E2159–01 | 3 – 10 |
| BES–E2170–00 | 4 – 1 |
| B5D–E2176–00 | 4 – 8 |
| 2PV–E2210–01 | 4 – 12 |
| B5D–E2213–00 | 4 – 14 |
| 5MX–E2222–00 | 4 – 13 |
| 54P–E2231–00 | 4 – 10 |
| B5D–E2241–00 | 4 – 11 |
| 2PH–E2611–10 | 6 – 10 |
| B5D–E2651–00 | 6 – 1 |
| B5D–E2652–00 | 6 – 3 |
| B5D–E2653–01 | 6 – 4 |
| B5D–E2658–00 | 6 – 2 |
| B5D–E2659–00 | 6 – 6 |
| B5D–E2668–00 | 6 – 7 |
| 2PH–E3300–10 | 5 – 1 |
| B5D–E3324–00 | 2 – 8 |

| PART NO. | REF. NO. |
|---|---|
| 1GC–E3411–00 | 5 – 5 |
| 5LW–E3452–00 | 2 – 6 |
| BF4–E3475–00 | 5 – 2 |
| B5D–E3556–00 | 7 – 3 |
| B5D–E3557–00 | 7 – 14 |
| 5LW–E3569–00 | 6 – 12 |
| 2PH–E3585–10 | 7 – 1 |
| 2PH–E3593–01 | 7 – 5 |
| 2PH–E3595–00 | 7 – 2 |
| B5D–E3750–01 | 7 – 17 |
| 2PH–E3761–10 | 7 – 9 |
| 5LW–E3769–00 | 9 – 20 |
| 2PH–E3770–10 | 7 – 8 |
| B3W–E3907–11 | 19 – 5 |
| 54P–E3915–00 | 19 – 6 |
| 54P–E3938–00 | 7 – 12 |
| 2PH–E3971–02 | 19 – 4 |
| 54P–E4137–00 | 7 – 13 |
| 2PH–E4146–00 | 7 – 20 |
| 54P–E4147–00 | 7 – 10 |
| 5CA–E4147–00 | 7 – 11 |
| B5D–E4411–00 | 7 – 21 |
| B5D–E4412–00 | 7 – 22 |
| 2PH–E4437–00 | 7 – 23 |
| 4ST–E443E–00 | 10 – 4 |
| 5TL–E443E–00 | 7 – 30 |
| B5D–E443G–00 | 7 – 27 |
| B5D–E4450–00 | 7 – 24 |
| B5D–E4452–10 | 7 – 26 |
| B5D–E4453–00 | 7 – 25 |
| B92–E4613–00 | 8 – 4 |
| BES–E4711–00 | 8 – 1 |
| BES–E4718–00 | 8 – 2 |
| BES–E5150–00 | 9 – 1 |
| 2PH–E5155–01 | 9 – 2 |
| B5D–E5191–00 | 10 – 7 |
| 54P–E5351–01 | 5 – 4 |
| B5D–E5362–00 | 9 – 19 |
| 5LW–E5363–00 | 9 – 17 |
| 54P–E5371–00 | 9 – 6 |
| | 10 – 3 |
| 2SX–E5373–00 | 9 – 7 |
| 2PH–E5407–00 | 10 – 14 |
| BES–E5411–00 | 10 – 1 |
| B5D–E5413–00 | 10 – 17 |
| B5D–E5417–10 | 9 – 21 |
| BES–E5421–00 | 9 – 31 |
| B5D–E5421–01 | 9 – 31 |

| PART NO. | REF. NO. |
|---|---|
| B5D–E5451–00 | 10 – 2 |
| B5D–E5453–00 | 9 – 25 |
| B5D–E5461–00 | 9 – 32 |
| B5D–E5463–10 | 9 – 26 |
| B3W–E5471–00 | 10 – 11 |
| B5D–E5472–00 | 10 – 13 |
| B5D–E5601–00 | 11 – 1 |
| 2BL–E5620–10 | 11 – 7 |
| B5D–E5630–00 | 11 – 9 |
| 5MX–E5657–00 | 12 – 36 |
| B5D–E5659–00 | 10 – 6 |
| 5MX–E5673–00 | 11 – 10 |
| 2DP–E5744–00 | 12 – 27 |
| 2PH–E6111–00 | 12 – 1 |
| 2PH–E6111–10 | 12 – 1 |
| 2DP–E6523–00 | 12 – 13 |
| 2SX–E6611–00 | 12 – 29 |
| 2SX–E6620–10 | 12 – 11 |
| 2DS–E6626–00 | 12 – 12 |
| 54P–E6819–00 | 12 – 14 |
| 2PH–E7211–20 | 13 – 5 |
| 2PH–E7211–30 | 13 – 5 |
| 2PH–E7211–40 | 13 – 5 |
| B5D–E7410–00 | 13 – 1 |
| B5D–E7410–10 | 13 – 1 |
| B5D–E7410–20 | 13 – 1 |
| B5D–E7410–30 | 13 – 1 |
| B5D–E7410–40 | 13 – 1 |
| B5D–E7421–00 | 13 – 4 |
| 2SX–E7465–00 | 12 – 17 |
| 2SX–E7465–20 | 12 – 19 |
| 2SX–E7465–30 | 12 – 18 |
| 44D–E7611–00 | 12 – 10 |
| 2SX–E7620–00 | 12 – 5 |
| 2SX–E7623–10 | 12 – 7 |
| 2PH–E7632–20 | 12 – 6 |
| 2PH–E7641–00 | 12 – 30 |
| 2SX–E7644–10 | 12 – 24 |
| 2SX–E7653–00 | 12 – 8 |
| 2SX–E7660–10 | 12 – 15 |
| 2DP–E7664–00 | 12 – 20 |
| 2DP–E7668–00 | 12 – 25 |
| 2SX–E7670–00 | 12 – 16 |
| 54P–E7674–00 | 12 – 9 |
| 2DP–E7674–10 | 12 – 21 |
| 2DP–E7678–00 | 12 – 26 |
| 2DP–E7678–10 | 12 – 28 |
| 2SX–E7683–10 | 12 – 22 |

| PART NO. | REF. NO. |
|---|---|
| 2SX–E7684–00 | 12 – 23 |
| BES–F1110–00 | 14 – 1 |
| BES–F1161–00 | 18 – 34 |
| BES–F1288–00 | 14 – 14 |
| 2PH–F1410–20 | 14 – 3 |
| 54P–F1459–00 | 14 – 5 |
| BJ7–F1459–00 | 14 – 5 |
| BES–F1511–00–P3 | 15 – 1 |
| BES–F1511–00–P4 | 15 – 1 |
| BES–F1511–00–P5 | 15 – 1 |
| 15K–F1518–00 | 15 – 3 |
| BES–F1552–01 | 27 – 20 |
| BF4–F1568–00 | 27 – 44 |
| BES–F1611–00 | 15 – 4 |
| BES–F1621–00 | 15 – 6 |
| B92–F1668–00 | 27 – 45 |
| BES–F1711–00–P3 | 16 – 3 |
| BES–F1711–00–P4 | 16 – 3 |
| BES–F1711–00–WN | 16 – 3 |
| BES–F1716–01 | 16 – 23 |
| BES–F171E–00 | 16 – 21 |
| BES–F1721–00–P3 | 16 – 9 |
| BES–F1721–00–P4 | 16 – 9 |
| BES–F1721–00–WN | 16 – 9 |
| BES–F1726–01 | 16 – 26 |
| BES–F172W–01 | 16 – 1 |
| BES–F1731–01 | 16 – 15 |
| B92–F1737–00 | 24 – 30 |
| BES–F173E–30 | 16 – 29 |
| BES–F173E–40 | 16 – 29 |
| BES–F173E–50 | 16 – 29 |
| BES–F173F–30 | 16 – 30 |
| BES–F173F–40 | 16 – 30 |
| BES–F173F–50 | 16 – 30 |
| BES–F1741–01 | 16 – 18 |
| 54P–F2141–00 | 14 – 8 |
| 10C–F2210–30 | 17 – 1 |
| B92–F3100–00 | 18 – 1 |
| B92–F3110–00 | 18 – 8 |
| 1FC–F3111–10 | 18 – 19 |
| B92–F3126–00 | 18 – 5 |
| B92–F3136–00 | 18 – 2 |
| B92–F3141–00 | 18 – 15 |
| 5LL–F3144–00 | 18 – 14 |
| 4UV–F3145–00 | 18 – 3 |
| | 18 – 6 |
| 2JG–F3147–00 | 18 – 20 |
| 5TF–F3152–00 | 18 – 11 |

| PART NO. | REF. NO. |
|---|---|
| 31D–F3153–00 | 18 – 21 |
| 5P0–F3156–00 | 18 – 4 |
| | 18 – 7 |
| 2JG–F3157–00 | 18 – 10 |
| 509–F3158–L0 | 18 – 12 |
| B92–F3170–00 | 18 – 9 |
| 31D–F3181–50 | 18 – 13 |
| B92–F3340–00 | 18 – 16 |
| 4D0–F3346–00 | 18 – 18 |
| 4FP–F3411–10 | 18 – 17 |
| 4RT–F3411–10 | 18 – 25 |
| 1KL–F3412–10 | 18 – 22 |
| 4RT–F3412–10 | 18 – 24 |
| 54P–F3415–00 | 18 – 28 |
| 2WB–F3416–00 | 18 – 27 |
| 1P6–F341E–10 | 18 – 26 |
| 5VL–F341E–10 | 18 – 23 |
| B92–F4110–00 | 19 – 1 |
| 5D9–F414G–00 | 14 – 2 |
| | 19 – 2 |
| B92–F414G–00 | 19 – 12 |
| 54P–F414G–10 | 19 – 8 |
| BES–F41B1–01 | 19 – 11 |
| B92–F4491–00 | 19 – 9 |
| 4YY–F4610–00 | 19 – 16 |
| 4YY–F4612–00 | 19 – 17 |
| BES–F470F–00 | 20 – 2 |
| 2WB–F4727–00 | 20 – 12 |
| B92–F472T–01 | 20 – 16 |
| BES–F4730–00 | 20 – 1 |
| BES–F473R–00 | 20 – 5 |
| 44P–F4741–00 | 20 – 3 |
| 4HF–F4741–00 | 20 – 4 |
| 1S8–F4768–00 | 20 – 15 |
| BES–F4773–00–33 | 20 – 19 |
| 40D–F4780–01 | 20 – 13 |
| 2SX–F478E–10 | 20 – 17 |
| 1VB–F5168–00–0X | 21 – 1 |
| 1VB–F5168–00–33 | 21 – 1 |
| 2SX–F5181–00 | 21 – 8 |
| 5TL–F5190–01 | 21 – 11 |
| 5LW–F530K–00 | 23 – 7 |
| 54P–F5326–00 | 23 – 4 |
| 44P–F5338–00–0X | 23 – 1 |
| 44P–F5338–00–33 | 23 – 1 |
| 5LW–F533A–00 | 23 – 12 |
| 10C–F5351–00 | 23 – 10 |
| B92–F5355–00 | 23 – 11 |

| PART NO. | REF. NO. |
|---|---|
| 2BM–F5802–00 | 22 – 4 |
| 5YP–F5803–50 | 22 – 5 |
| 2BM–F5805–00 | 22 – 9 |
| 5P0–F5807–00 | 25 – 4 |
| 5P0–F580A–00 | 25 – 5 |
| 2SX–F580U–10 | 22 – 3 |
| BES–F582U–00 | 22 – 1 |
| 5P0–F5852–00 | 25 – 7 |
| 5P0–F5854–00 | 25 – 6 |
| 5P0–F5855–00 | 25 – 9 |
| B5D–F5867–00 | 25 – 10 |
| 2SX–F5872–00 | 25 – 1 |
| B92–F5875–00 | 18 – 30 |
| B92–F5876–00 | 18 – 32 |
| 2BM–F5917–00 | 22 – 6 |
| 2BM–F5919–00 | 22 – 11 |
| 5YP–F5924–10 | 22 – 12 |
| 5YP–F5925–01 | 22 – 10 |
| 5YP–F5937–00 | 22 – 7 |
| BES–F6110–00 | 24 – 1 |
| BES–F6143–00–P3 | 24 – 5 |
| BES–F6143–00–P4 | 24 – 5 |
| BES–F6143–00–P5 | 24 – 5 |
| BES–F6145–00 | 24 – 8 |
| B92–F6240–00 | 24 – 11 |
| 1VP–F6241–00 | 24 – 12 |
| B92–F6246–00 | 24 – 13 |
| B92–F6257–00 | 24 – 21 |
| | 26 – 16 |
| 2WB–F6280–00 | 24 – 14 |
| 55D–F6281–00 | 24 – 27 |
| 55D–F6282–00 | 24 – 28 |
| 2WB–F6290–00 | 24 – 15 |
| B3W–F6301–00 | 24 – 16 |
| BES–F6301–00 | 24 – 16 |
| B3W–F6301–10 | 24 – 16 |
| 2SX–F6351–00 | 24 – 19 |
| B92–F637G–00 | 24 – 20 |
| BES–F7111–00 | 26 – 1 |
| 2PH–F7112–00 | 26 – 2 |
| 2PH–F7114–00 | 14 – 6 |
| 1GC–F7121–00 | 9 – 3 |
| 5LW–F7254–00 | 26 – 5 |
| B92–F7267–00 | 26 – 6 |
| BES–F7311–00 | 26 – 11 |
| BES–F7430–00 | 26 – 17 |
| BES–F7431–00 | 26 – 18 |
| B92–F7432–00 | 26 – 19 |

| PART NO. | REF. NO. |
|---|---|
| BES–F7440–00 | 26 – 25 |
| BES–F7441–00 | 26 – 26 |
| B92–F7442–00 | 26 – 27 |
| BES–F7481–00 | 26 – 7 |
| BES–F8100–00 | 20 – 21 |
| BB3–F8309–00 | 27 – 3 |
| B3W–F8311–01 | 27 – 1 |
| BES–F8312–01 | 27 – 10 |
| BES–F8345–01 | 27 – 23 |
| BES–F8346–01 | 27 – 31 |
| BES–F8356–00 | 14 – 11 |
| BES–F8358–00 | 14 – 16 |
| BES–F835U–00–P3 | 27 – 27 |
| BES–F835U–00–P4 | 27 – 27 |
| BES–F835U–00–WN | 27 – 27 |
| BES–F835V–00–P3 | 27 – 35 |
| BES–F835V–00–P4 | 27 – 35 |
| BES–F835V–00–WN | 27 – 35 |
| BES–F836K–01 | 27 – 13 |
| 2BM–F8379–00 | 27 – 14 |
| BES–F8385–01 | 27 – 16 |
| BES–F838D–01 | 27 – 4 |
| BES–F838S–01 | 27 – 7 |
| BES–F8391–30 | 27 – 42 |
| BES–F8391–40 | 27 – 42 |
| BES–F8391–50 | 27 – 42 |
| BES–F8392–30 | 27 – 43 |
| BES–F8392–40 | 27 – 43 |
| BES–F8392–50 | 27 – 43 |
| 5P2–F839B–00 | 27 – 39 |
| | 27 – 40 |
| BES–F83E1–00 | 27 – 41 |
| B5D–H1410–11 | 28 – 2 |
| B5D–H1450–00 | 28 – 1 |
| 5TP–H1940–00 | 34 – 10 |
| BBM–H2100–00 | 34 – 1 |
| BBY–H2126–00 | 19 – 13 |
| BES–H2129–01 | 20 – 9 |
| BES–H2151–00 | 34 – 7 |
| BAX–H2151–20 | 34 – 8 |
| BAX–H2151–90 | 34 – 6 |
| 1VB–H2176–00 | 20 – 6 |
| 2PH–H2310–01 | 35 – 3 |
| 2PH–H2370–10 | 35 – 6 |
| B3W–H246B–00 | 35 – 10 |
| B6H–H254B–00 | 34 – 14 |
| 1LB–H2556–00 | 33 – 10 |
| 1LB–H2566–01 | 34 – 11 |

| PART NO. | REF. NO. |
|---|---|
| BES–H2590–00 | 34 – 5 |
| B5D–H276A–00 | 33 – 14 |
| B5D–H277A–00 | 33 – 17 |
| B5D–H279A–00 | 33 – 15 |
| 1LB–H2911–20 | 33 – 1 |
| BES–H3310–00 | 29 – 2 |
| 55D–H3311–00 | 29 – 1 |
| | 29 – 7 |
| | 29 – 14 |
| 1VP–H3318–00 | 29 – 20 |
| BES–H331E–00 | 29 – 4 |
| BES–H3320–00 | 29 – 3 |
| 55D–H3323–00 | 29 – 9 |
| 55D–H332M–00 | 29 – 16 |
| 55D–H3330–01 | 29 – 6 |
| 55D–H3333–00 | 29 – 11 |
| | 29 – 18 |
| 55D–H333A–00 | 29 – 8 |
| 55D–H333E–01 | 29 – 10 |
| 55D–H3340–01 | 29 – 13 |
| 55D–H334A–00 | 29 – 15 |
| 55D–H334E–01 | 29 – 17 |
| 1VP–H3358–00 | 30 – 3 |
| 55D–H3358–00 | 29 – 12 |
| | 29 – 19 |
| B5D–H3362–00 | 33 – 16 |
| 2PH–H3371–00 | 35 – 13 |
| BES–H3509–00 | 30 – 6 |
| BES–H3510–00 | 30 – 1 |
| BES–H3511–00 | 30 – 2 |
| 5LW–H3518–00 | 30 – 5 |
| 2BR–H3550–00 | 30 – 11 |
| 1VP–H357E–00 | 30 – 7 |
| 52B–H3591–00 | 35 – 7 |
| 1VP–H3645–00 | 30 – 4 |
| 1LB–H3912–00 | 33 – 2 |
| 5TL–H3922–00 | 33 – 18 |
| 1LB–H3935–00 | 33 – 3 |
| 40D–H3962–00 | 33 – 5 |
| 1LB–H3967–00 | 33 – 4 |
| 40D–H396X–00 | 33 – 6 |
| B5D–H3975–00 | 33 – 13 |
| 1LB–H3980–00 | 33 – 9 |
| 54P–H3980–00 | 33 – 21 |
| BES–H4300–00 | 31 – 1 |
| BES–H4710–00 | 32 – 1 |
| 1VP–H4714–00 | 32 – 2 |
| BES–H4721–00 | 32 – 4 |

| PART NO. | REF. NO. |
|---|---|
| BES–H4723–00 | 32 – 3 |
| BES–H4735–00 | 32 – 5 |
| BES–H4759–00 | 32 – 7 |
| 2FC–H5111–00 | 15 – 9 |
| 55D–H5130–00 | 15 – 11 |
| BE1–H5130–00 | 15 – 11 |
| 31B–H5353–00 | 31 – 2 |
| 2PH–H5752–00 | 19 – 7 |
| B5D–H5885–01 | 7 – 18 |
| 2DP–H592A–20 | 35 – 9 |
| B3W–H594A–10 | 35 – 1 |
| 1VB–H652Y–00 | 30 – 9 |
| 4C9–W0048–00 | 22 – 8 |
| BES–XH250–00 | 34 – 2 |
| 90101–06046 | 23 – 14 |
| 90101–08847 | 26 – 12 |
| 90105–07802 | 4 – 7 |
| 90105–088H4 | 17 – 2 |
| 90105–10831 | 22 – 13 |
| 90105–10896 | 24 – 3 |
| 90105–108B2 | 14 – 7 |
| 90109–06255 | 33 – 19 |
| 90109–06265 | 27 – 15 |
| 90109–06798 | 33 – 7 |
| 90109–068B4 | 20 – 7 |
| | 35 – 2 |
| 90109–068B5 | 14 – 15 |
| | 15 – 2 |
| | 15 – 5 |
| | 26 – 9 |
| | 31 – 3 |
| 90110–06846 | 7 – 16 |
| 90110–06868 | 1 – 15 |
| 90110–06887 | 6 – 11 |
| 90111–06162 | 34 – 4 |
| 90111–06811 | 8 – 3 |
| 90111–08853 | 22 – 2 |
| 90116–08843 | 9 – 12 |
| 90119–06155 | 19 – 3 |
| 90159–06810 | 16 – 22 |
| 90170–05803 | 3 – 9 |
| 90170–08810 | 1 – 10 |
| 90170–12800 | 12 – 38 |
| 90170–12803 | 12 – 34 |
| 90179–06411 | 24 – 25 |
| 90179–12004 | 28 – 6 |
| 90179–25812 | 18 – 29 |
| 90183–04005 | 16 – 8 |

| PART NO. | REF. NO. |
|---|---|
| 90183–04005 | 16 – 14 |
| | 27 – 5 |
| | 27 – 8 |
| 90183–05807 | 15 – 7 |
| | 16 – 7 |
| | 16 – 13 |
| | 16 – 17 |
| | 16 – 20 |
| | 16 – 24 |
| | 16 – 27 |
| | 20 – 8 |
| | 24 – 2 |
| | 24 – 6 |
| | 24 – 10 |
| | 26 – 8 |
| | 27 – 2 |
| | 27 – 18 |
| | 27 – 22 |
| | 27 – 24 |
| | 27 – 28 |
| | 27 – 32 |
| | 27 – 36 |
| | 32 – 6 |
| 90185–05803 | 15 – 10 |
| 90185–10011 | 24 – 4 |
| 90185–10012 | 21 – 9 |
| 90185–16800 | 23 – 15 |
| 90201–10065 | 17 – 5 |
| 90201–10118 | 25 – 3 |
| 90201–10831 | 21 – 10 |
| 90201–12028 | 17 – 4 |
| 90201–12823 | 28 – 5 |
| 90201–154E8 | 11 – 4 |
| 90201–15845 | 12 – 39 |
| 90201–16810 | 23 – 16 |
| 90201–16816 | 12 – 40 |
| 90201–220J8 | 23 – 17 |
| 90206–14093 | 23 – 13 |
| 90208–12808 | 12 – 37 |
| 90249–12008 | 24 – 26 |
| 90269–06816 | 19 – 15 |
| | 24 – 7 |
| | 27 – 6 |
| | 27 – 9 |
| | 27 – 19 |
| 90280–03017 | 2 – 9 |
| 90340–12816 | 9 – 13 |
| 90380–10803 | 12 – 32 |

| PART NO. | REF. NO. |
|---|---|
| 90380–15809 | 11 – 3 |
| 90387–05820 | 16 – 5 |
| | 16 – 11 |
| 90387–068T2 | 7 – 31 |
| 90387–08820 | 26 – 13 |
| 90387–10277 | 21 – 7 |
| 90387–16819 | 12 – 35 |
| 90388–08803 | 9 – 4 |
| 90388–10800 | 14 – 4 |
| 90388–10805 | 9 – 5 |
| 90401–10015 | 25 – 2 |
| 90430–06803 | 1 – 5 |
| 90430–08804 | 9 – 16 |
| 90430–10806 | 35 – 8 |
| 90430–12803 | 9 – 14 |
| 90450–46803 | 7 – 35 |
| 90464–04801 | 16 – 25 |
| | 16 – 28 |
| | 27 – 26 |
| | 27 – 34 |
| 90464–07018 | 27 – 12 |
| | 27 – 30 |
| | 27 – 38 |
| 90464–07805 | 34 – 13 |
| 90464–12810 | 35 – 4 |
| 90464–16807 | 35 – 11 |
| 90467–10008 | 9 – 8 |
| 90467–110A3 | 10 – 5 |
| 90467–12807 | 7 – 28 |
| 90467–13808 | 7 – 38 |
| 90467–13858 | 7 – 39 |
| 90480–10003 | 15 – 8 |
| 90480–13013 | 7 – 32 |
| 90480–14004 | 14 – 12 |
| 90501–12743 | 26 – 20 |
| | 26 – 28 |
| 90501–16003 | 24 – 24 |
| 90501–16004 | 5 – 6 |
| 90506–12001 | 23 – 8 |
| 90506–15001 | 23 – 9 |
| 90506–20514 | 26 – 15 |
| 90506–35821 | 26 – 4 |
| 90508–32768 | 11 – 2 |
| 90520–02806 | 14 – 18 |
| 90520–03806 | 20 – 10 |
| 90520–04812 | 6 – 13 |
| 90520–05819 | 6 – 5 |
| 90520–08812 | 19 – 18 |

| PART NO. | REF. NO. |
|---|---|
| 90520–10832 | 7 – 34 |
| 90520–10834 | 10 – 12 |
| 90520–10851 | 7 – 33 |
| 90560–10292 | 21 – 2 |
| 91312–05016 | 34 – 12 |
| 91312–06012 | 4 – 6 |
| 91312–06025 | 11 – 8 |
| 91332–05010 | 19 – 10 |
| 91332–06020 | 28 – 4 |
| | 33 – 12 |
| 91332–06025 | 25 – 11 |
| 91332–06035 | 28 – 3 |
| 91401–25015 | 26 – 23 |
| | 26 – 31 |
| 91701–08035 | 26 – 22 |
| | 26 – 30 |
| 91A20–07065 | 19 – 14 |
| 92012–05010 | 24 – 18 |
| 92012–05016 | 24 – 17 |
| 92907–10600 | 14 – 10 |
| 93102–15801 | 11 – 6 |
| 93102–20815 | 12 – 4 |
| 93102–21800 | 9 – 23 |
| 93102–25824 | 9 – 30 |
| 93102–30805 | 13 – 7 |
| 93106–20808 | 21 – 3 |
| 93210–07802 | 23 – 6 |
| 93210–09806 | 4 – 2 |
| 93210–148H8 | 9 – 18 |
| 93210–15862 | 4 – 17 |
| 93210–29800 | 5 – 7 |
| 93210–35883 | 7 – 4 |
| 93211–07800 | 9 – 24 |
| 93306–001YG | 4 – 3 |
| 93306–201YS | 12 – 2 |
| 93306–204XX | 12 – 3 |
| 93306–272YB | 13 – 6 |
| 93306–300YF | 21 – 4 |
| 93306–302YU | 13 – 2 |
| 93306–303YU | 13 – 9 |
| 93306–351Y8 | 13 – 3 |
| 93306–372X7 | 2 – 7 |
| 93310–528YP | 2 – 3 |
| 933A6–202Y0 | 12 – 31 |
| 93440–10153 | 1 – 3 |
| 93450–14088 | 2 – 12 |
| 93501–04823 | 26 – 21 |
| | 26 – 29 |

| PART NO. | REF. NO. |
|---|---|
| 93900–00817 | 21 – 6 |
| | 23 – 3 |
| 94107–14808 | 21 – 5 |
| 94109–14804 | 23 – 2 |
| 94568–A6092 | 4 – 9 |
| 94700–00372 | 1 – 11 |
| 95302–10600 | 17 – 3 |
| 95602–06100 | 33 – 8 |
| | 33 – 20 |
| 95602–08200 | 26 – 14 |
| 95602–10200 | 14 – 9 |
| 95612–08618 | 1 – 6 |
| 95702–08500 | 8 – 5 |
| 95702–10500 | 23 – 5 |
| 95802–06012 | 14 – 13 |
| 95812–08045 | 9 – 15 |
| 95D02–06010 | 18 – 31 |
| | 18 – 35 |
| | 35 – 14 |
| 95D02–08030 | 26 – 24 |
| | 26 – 32 |
| 95D32–06010 | 14 – 17 |
| 95D32–06012 | 18 – 33 |
| 95D32–06020 | 10 – 15 |
| | 20 – 20 |
| 95D32–06025 | 7 – 15 |
| | 7 – 36 |
| 95D32–06030 | 1 – 8 |
| 95D32–06035 | 7 – 6 |
| 95D32–06045 | 7 – 7 |
| 95D32–06080 | 10 – 16 |
| 95D32–08055 | 8 – 6 |
| 95E32–06010 | 1 – 4 |
| | 10 – 8 |
| | 20 – 14 |
| 95E32–06012 | 34 – 9 |
| 95E32–06014 | 24 – 23 |
| 95E32–06016 | 35 – 5 |
| 95E32–06020 | 4 – 15 |
| | 6 – 8 |
| | 9 – 29 |
| | 10 – 19 |
| 95E32–06035 | 9 – 34 |
| | 10 – 10 |
| 95E32–06040 | 24 – 22 |
| 95E32–06045 | 9 – 35 |
| | 10 – 18 |
| 95E32–06060 | 9 – 10 |

| PART NO. | REF. NO. |
|---|---|
| 95E32–06070 | 9 – 28 |
| 95E32–06100 | 9 – 11 |
| 97602–05208 | 34 – 3 |
| 97702–40012 | 30 – 8 |
| 97702–60530 | 6 – 9 |
| 97707–50012 | 16 – 2 |
| | 16 – 6 |
| | 16 – 12 |
| | 16 – 16 |
| | 16 – 19 |
| | 20 – 11 |
| | 24 – 9 |
| | 26 – 10 |
| | 27 – 17 |
| | 27 – 21 |
| | 27 – 25 |
| | 27 – 33 |
| 97707–50016 | 16 – 4 |
| | 16 – 10 |
| | 27 – 11 |
| | 27 – 29 |
| | 27 – 37 |
| | 29 – 5 |
| | 30 – 10 |
| | 31 – 4 |
| 97707–50025 | 7 – 29 |
| 98502–05010 | 33 – 11 |
| 98502–05020 | 5 – 3 |
| 98502–05025 | 24 – 29 |
| 98507–05010 | 20 – 18 |
| 99002–09600 | 26 – 3 |
| 99009–15400 | 11 – 5 |
| 99009–25400 | 13 – 8 |
| 99009–35700 | 12 – 33 |
| 99237–00080 | 24 – 31 |
| 99480–03012 | 9 – 22 |
| 99480–05010 | 9 – 27 |
| 99530–10114 | 1 – 13 |
| | 1 – 14 |
| | 9 – 9 |
| | 9 – 33 |
| | 10 – 9 |