YAMAHA

PARTS CATALOGUE

BWP1

SMX

MTT890D (BHX2) MALAYSIA

YAMAHA GENUINE Parts & Accessories

1YBHX-440E1

( )

MTT890D
PARTS CATALOGUE
©2023 by Yamaha Motor Co., Ltd.
1st edition, March 2023
All rights reserved.
Any reprinting or unauthorized use
without the written permission of
Yamaha Motor Co., Ltd.
is expressly prohibited.
Printed in Japan.

FOREWORD

This Parts Catalogue is related to the parts for the model(s) on the cover page. When you are ordering replacement parts, please refer to this Parts Catalogue and quote both part numbers and part names correctly.

1. Modifications or additions which have been made after the issue of the Parts Catalogue will be announced in the Parts News.
   It is advisable that you make the necessary corrections to the Parts Catalogue according to the Parts News.

2. Abbreviations
   The following abbreviations are used in this Parts Catalogue.

   "UR" Use specified parts number.

   "UN" Use as many as needed.

   "AP" Alternate Parts

   "LM" Locally Made (Parts need to be ordered locally)

   "F#" Frame No. (Applicable machine No.)

   "O/S" Over Size

3. The number of components for assembly
   - Parts, which are to be supplied in an assembly, are listed with a dot (.) in front of the part name as shown below.
   - The numeral appearing to the right of each component part indicates the quantity of parts for each assembly unit.

PART NO.	DESCRIPTION	Q'TY	REMARKS
2F5–83310–60	FRONT FLASHER LIGHT ASSY	2	
115–83311–60	.BULB (6V–18W)	1	

4. Applicable colours of graphics are represented in the "REMARKS" as shown below.

PART NO.	DESCRIPTION	Q'TY	REMARKS
2N4–24110–00–X5	FUEL TANK COMP.	2	MXR
3J1–24240–10	.GRAPHIC, FUEL TANK	1	FOR MXR

5. Note that the illustrations for reference in finding parts numbers are not to be used for assembling. When assembling, please use the applicable service manual.

6. The asterisk (*) before a reference number indicates modified items after the first edition.

7. Applicable Serial No.

Frame Serial No.

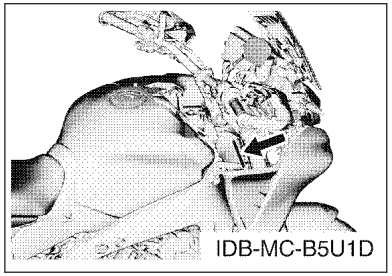

Engine Serial No.

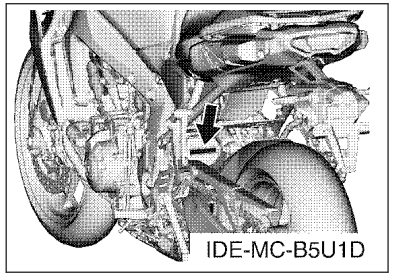

8. Applicable Colour Code (The (*) mark shows Model colour.)

Abbreviation	Colour Name	Colour Code
BWP1(*)	BLUISH WHITE PEARL 1	1517
MBL2	MAT BLACK 2	0582
NG	NEBURA GOLD	008L
SMX(*)	BLACK METALLIC X	0903
YB	YAMAHA BLACK	0033

9. Applicable Starting Serial No.

Frame Serial No.

Serial No.	Name Of Q'ty Column	Model Code

Engine Serial No.

Serial No.	Name Of Q'ty Column	Model Code

CONTENTS

PERIODIC MAINTENANCE PARTS..... 1

ENGINE

CYLINDER HEAD.....2
CRANKSHAFT & PISTON.....3
VALVE..... 4
CAMSHAFT & CHAIN..... 6
WATER PUMP..... 7
RADIATOR & HOSE.....9
OIL PUMP.....11
OIL CLEANER.....12
INTAKE.....13
INTAKE 2.....15
EXHAUST.....16
CRANKCASE..... 17
CRANKCASE COVER 1.....19
STARTER.....21
CLUTCH..... 22
TRANSMISSION..... 24
SHIFT CAM & FORK.....26
SHIFT SHAFT.....27

CHASSIS

FRAME..... 29
FENDER.....31
SIDE COVER.....33
REAR ARM.....35
REAR SUSPENSION..... 37
STEERING..... 38
FRONT FORK..... 39
FUEL TANK..... 41
FUEL TANK 2..... 43
SEAT..... 45
FRONT WHEEL.....47
FRONT BRAKE CALIPER.....48
REAR WHEEL..... 49
REAR BRAKE CALIPER..... 51
STEERING HANDLE & CABLE.....52
FRONT MASTER CYLINDER..... 53
STAND & FOOTREST.....55
REAR MASTER CYLINDER.....58
WINDSHIELD..... 60
COWLING.....61
GENERATOR..... 63
STARTING MOTOR..... 64
FLASHER LIGHT.....65
METER..... 66
HEADLIGHT..... 67
TAILLIGHT.....68
HANDLE SWITCH & LEVER.....69
ELECTRICAL 1.....71
ELECTRICAL 2.....73
ELECTRICAL 3.....75

INDEX

NUMERICAL INDEX.....77

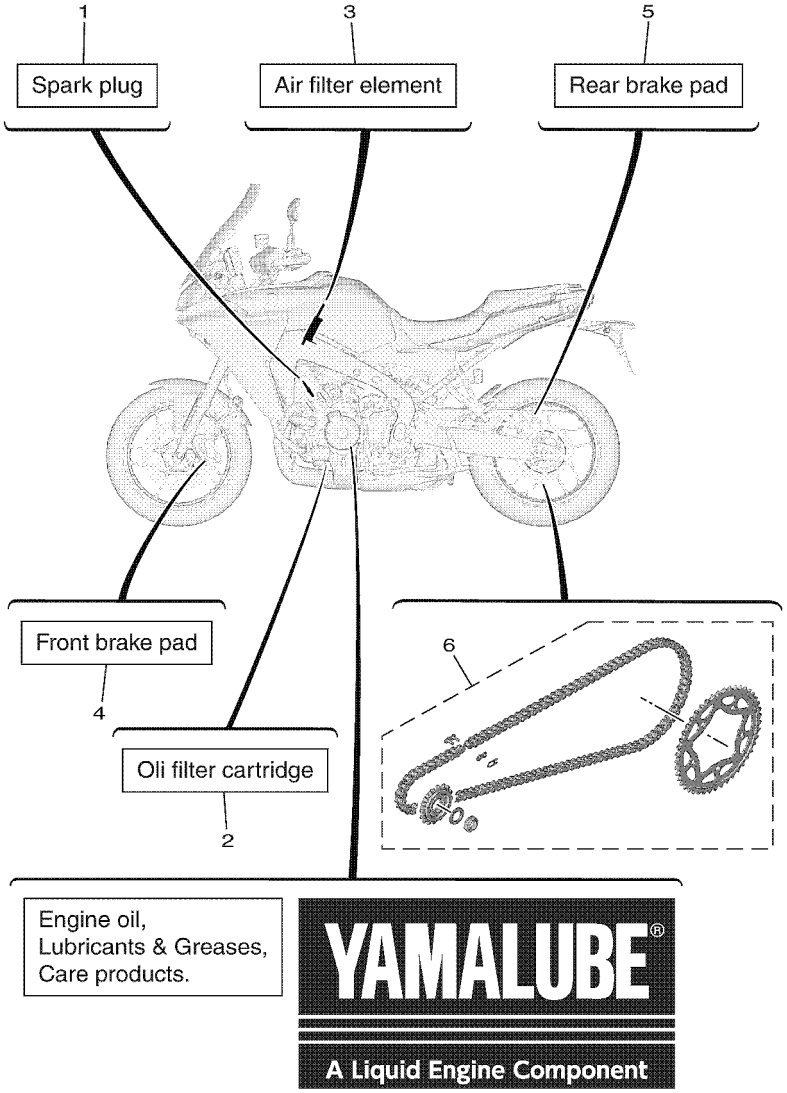

BAPH431DX010

FIG. 1 PERIODIC MAINTENANCE PARTS

REF. NO.	PART NO.	DESCRIPTION	BHX2					REMARKS
1	94701–00446	PLUG, SPARK (NGK LMAR9A-9)	1					
2	5GH–13440–61	ELEMENT ASSY, OIL CLEANER	1					
3	B7N–14451–01	ELEMENT, AIR CLEANER	1					
4	5SL–25805–00	BRAKE PAD KIT	2					
5	5VX–25806–00	BRAKE PAD KIT 2	1					
6	BAP–W001A–00	CHAIN & SPROCKET KIT	1					

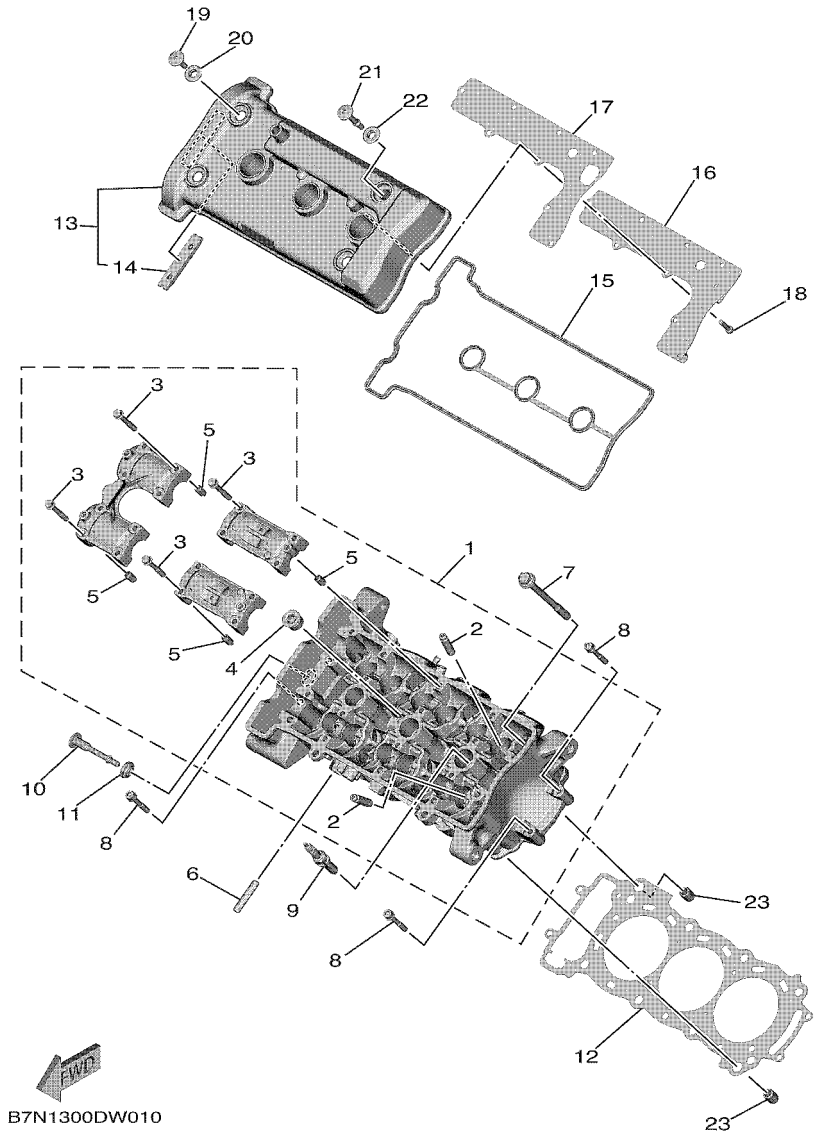

FIG. 2 CYLINDER HEAD

REF. NO.	PART NO.	DESCRIPTION	BHX2					REMARKS
1	B7N–11101–09	CYLINDER HEAD ASSY	1					
2	2C0–11133–11	.GUIDE, VALVE 1	12					
3	90105–06027	.BOLT, FLANGE	16					
4	90340–18002	.PLUG, STRAIGHT SCREW	2					
5	91808–16023	.PIN, DOWEL	6					
6	95612–08625	BOLT, STUD	6					
7	90119–09019	BOLT, WITH WASHER	8					
8	90109–061F7	BOLT	4					
9	94701–00446	PLUG, SPARK (NGK LMAR9A-9)	3					
10	90109–06293	BOLT	1					
11	5VY–1111G–00	RUBBER, MOUNT 1	1					
12	B7N–11181–00	GASKET, CYLINDER HEAD 1	1					
13	B7N–11191–00	COVER, CYLINDER HEAD 1	1					MDNM9
14	5BE–12241–01	.GUIDE, STOPPER 2	1					
15	B7N–11193–00	GASKET, HEAD COVER 1	1					
16	B7N–11165–00	PLATE, BREATHER	1					
17	B7N–11169–00	GASKET, BREATHER COVER	1					
18	90149–05037	SCREW	7					
19	90109–066F0	BOLT	3					
20	5VY–1111G–00	RUBBER, MOUNT 1	3					
21	90109–06271	BOLT	1					
22	5VY–1111G–00	RUBBER, MOUNT 1	1					
23	99530–12016	PIN, DOWEL	2					

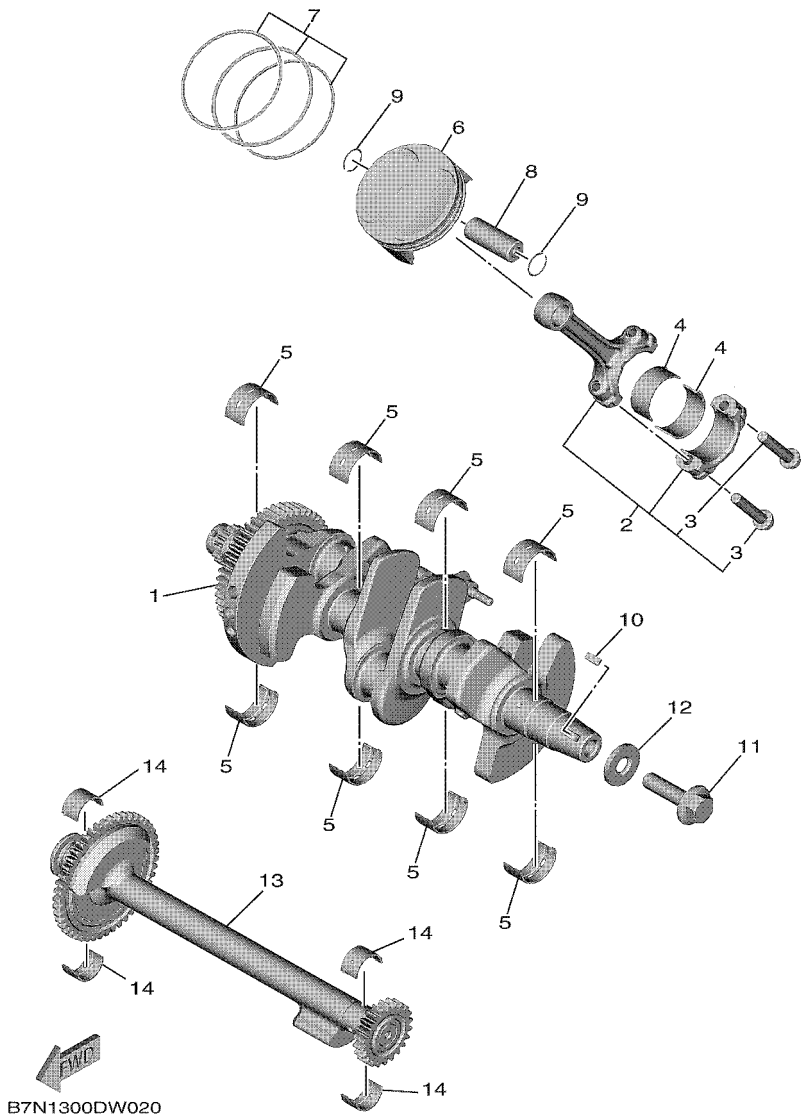

FIG. 3 CRANKSHAFT & PISTON

REF. NO.	PART NO.	DESCRIPTION	BHX2					REMARKS
1	B7N–11400–00	CRANKSHAFT ASSY	1					
2	B7N–11650–00	CONNECTING ROD ASSY	3					
3	1RC–11654–00	.BOLT, CONNECTING ROD	2					
4	1RC–11656–00	PLANE BEARING, CONNECTING ROD	6					UR BLUE
	1RC–11656–10	PLANE BEARING, CONNECTING ROD	6					UR BLACK
	1RC–11656–20	PLANE BEARING, CONNECTING ROD	6					UR BROWN
	1RC–11656–30	PLANE BEARING, CONNECTING ROD	6					UR GREEN
5	B7N–11416–A0	PLANE BEARING, CRANKSHAFT 1	8					UR WHITE
	B7N–11416–00	PLANE BEARING, CRANKSHAFT 1	8					UR BLUE
	B7N–11416–10	PLANE BEARING, CRANKSHAFT 1	8					UR BLACK
	B7N–11416–20	PLANE BEARING, CRANKSHAFT 1	8					UR BROWN
	B7N–11416–30	PLANE BEARING, CRANKSHAFT 1	8					UR GREEN
6	B7N–11631–00	PISTON (STD)	3					
7	B7N–11603–00	PISTON RING SET (STD)	3					
8	39P–11633–00	PIN, PISTON	3					
9	93450–18157	CIRCLIP	6					
10	90280–05029	KEY, WOODRUFF	1					
11	90105–12101	BOLT, FLANGE	1					
12	90201–12008	WASHER, PLATE	1					
13	1RC–11500–01	BALANCER ASSY	1					
14	2S3–11413–00	METAL, BALANCE WEIGHT	4					UR BLUE
	2S3–11413–10	METAL, BALANCE WEIGHT	4					UR BLACK
	2S3–11413–20	METAL, BALANCE WEIGHT	4					UR BROWN
	2S3–11413–30	METAL, BALANCE WEIGHT	4					UR GREEN
	2S3–11413–40	METAL, BALANCE WEIGHT	4					UR YELLOW

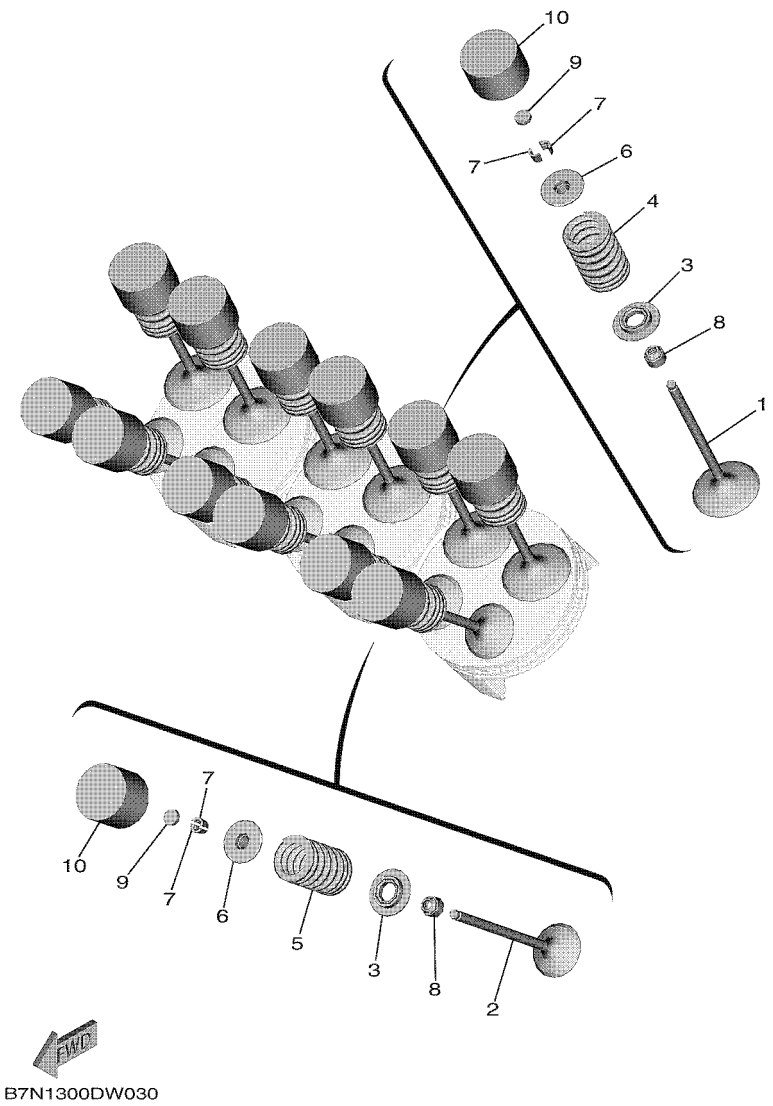

FIG. 4 VALVE

REF. NO.	PART NO.	DESCRIPTION	BHX2					REMARKS
1	1RC–12111–01	VALVE, INTAKE	6					
2	1RC–12121–01	VALVE, EXHAUST	6					
3	3D7–12116–00	SEAT, VALVE SPRING	12					
4	1RC–12113–00	SPRING, VALVE INNER	6					
5	BEA–12114–00	SPRING, VALVE OUTER	6					
6	3D7–12117–00	RETAINER, VALVE SPRING	12					
7	1WG–12118–00	LOCK, VALVE SPRING RETAINER	24					
8	2HC–12119–00	SEAL, VALVE STEM	12					
9	1HX–12168–F0	PAD, ADJUSTING 2 (1.50)	12					UR
	1HX–12168–H1	PAD, ADJUSTING 2 (1.55)	12					UR
	1HX–12168–K1	PAD, ADJUSTING 2 (1.60)	12					UR
	1HX–12168–M1	PAD, ADJUSTING 2 (1.65)	12					UR
	1HX–12168–R1	PAD, ADJUSTING 2 (1.70)	12					UR
	1HX–12168–U1	PAD, ADJUSTING 2 (1.75)	12					UR
	1HX–12168–W1	PAD, ADJUSTING 2 (1.80)	12					UR
	1HX–12168–Y1	PAD, ADJUSTING 2 (1.85)	12					UR
	1HX–12169–11	PAD, ADJUSTING 2 (1.90)	12					UR
	1HX–12169–31	PAD, ADJUSTING 2 (1.95)	12					UR
	1HX–12169–50	PAD, ADJUSTING 2 (2.00)	12					UR
	1HX–12169–70	PAD, ADJUSTING 2 (2.05)	12					UR
	1HX–12169–90	PAD, ADJUSTING 2 (2.10)	12					UR
	1HX–12169–E0	PAD, ADJUSTING 2 (2.15)	12					UR
	1HX–12169–G0	PAD, ADJUSTING 2 (2.20)	12					UR
	1HX–12169–J0	PAD, ADJUSTING 2 (2.25)	12					UR
	1HX–12169–L0	PAD, ADJUSTING 2 (2.30)	12					UR
	1HX–12169–N0	PAD, ADJUSTING 2 (2.35)	12					UR
	1HX–12169–T0	PAD, ADJUSTING 2 (2.40)	12					UR

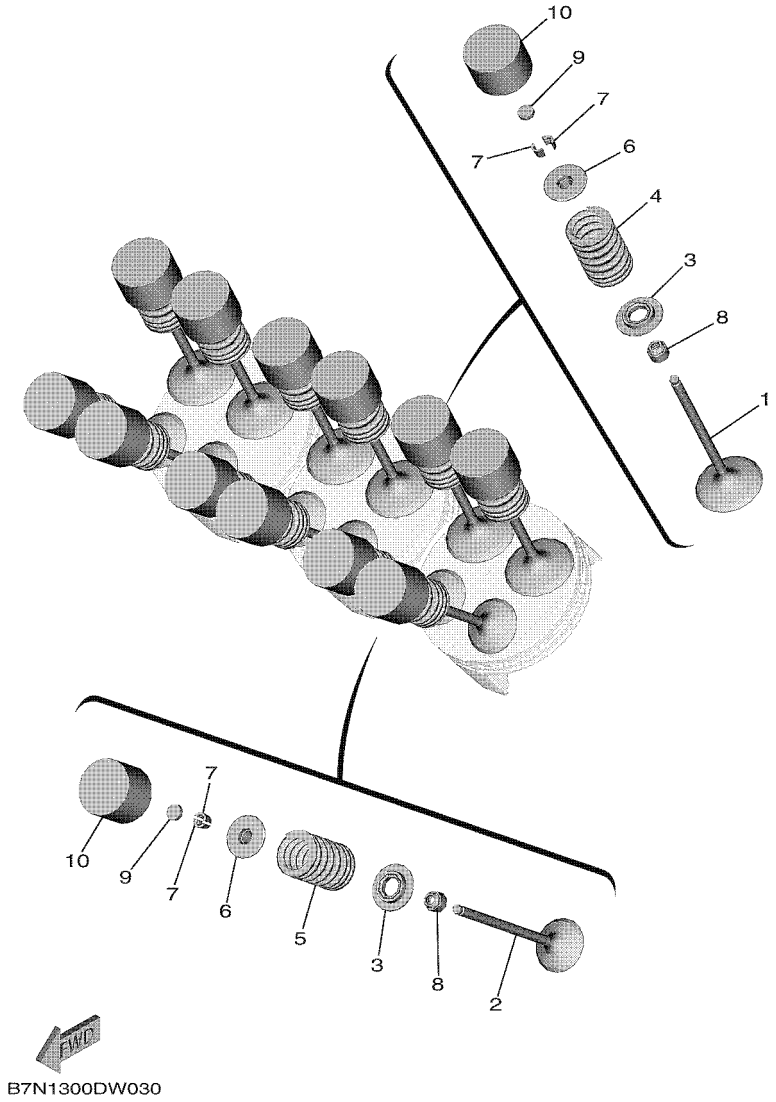

FIG. 4 VALVE

REF. NO.	PART NO.	DESCRIPTION	BHX2					REMARKS
10	B4T–12153–00	LIFTER, VALVE	12					
	B4T–12153–09	LIFTER, VALVE (O/S)	12					AP PURPLE

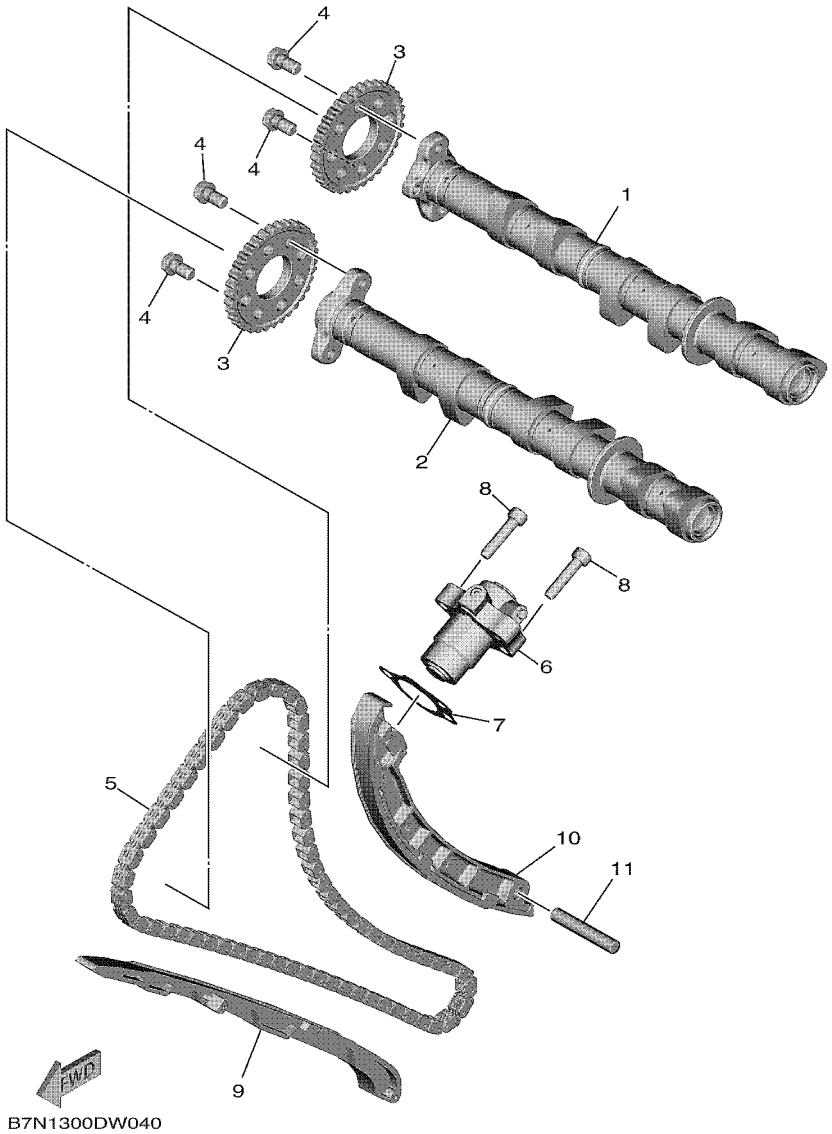

FIG. 5 CAMSHAFT & CHAIN

REF. NO.	PART NO.	DESCRIPTION	BHX2					REMARKS
1	B7N–12170–00	CAMSHAFT ASSY 1	1					
2	B7N–12180–00	CAMSHAFT ASSY 2	1					
3	B7N–12176–00	SPROCKET, CAM CHAIN	2					
4	90105–07006	BOLT, FLANGE	4					
5	94591–78128	CHAIN	1					
6	B7N–12210–01	TENSIONER ASSY, CAM CHAIN	1					
7	14B–12213–00	GASKET, TENSIONER CASE	1					
8	91312–06025	BOLT, HEXAGON SOCKET HEAD	2					
9	1RC–12251–00	DAMPER, CHAIN 1	1					
10	B7N–12250–00	CHAIN DAMPER ASSY	1					
11	93607–44002	PIN, DOWEL	1					

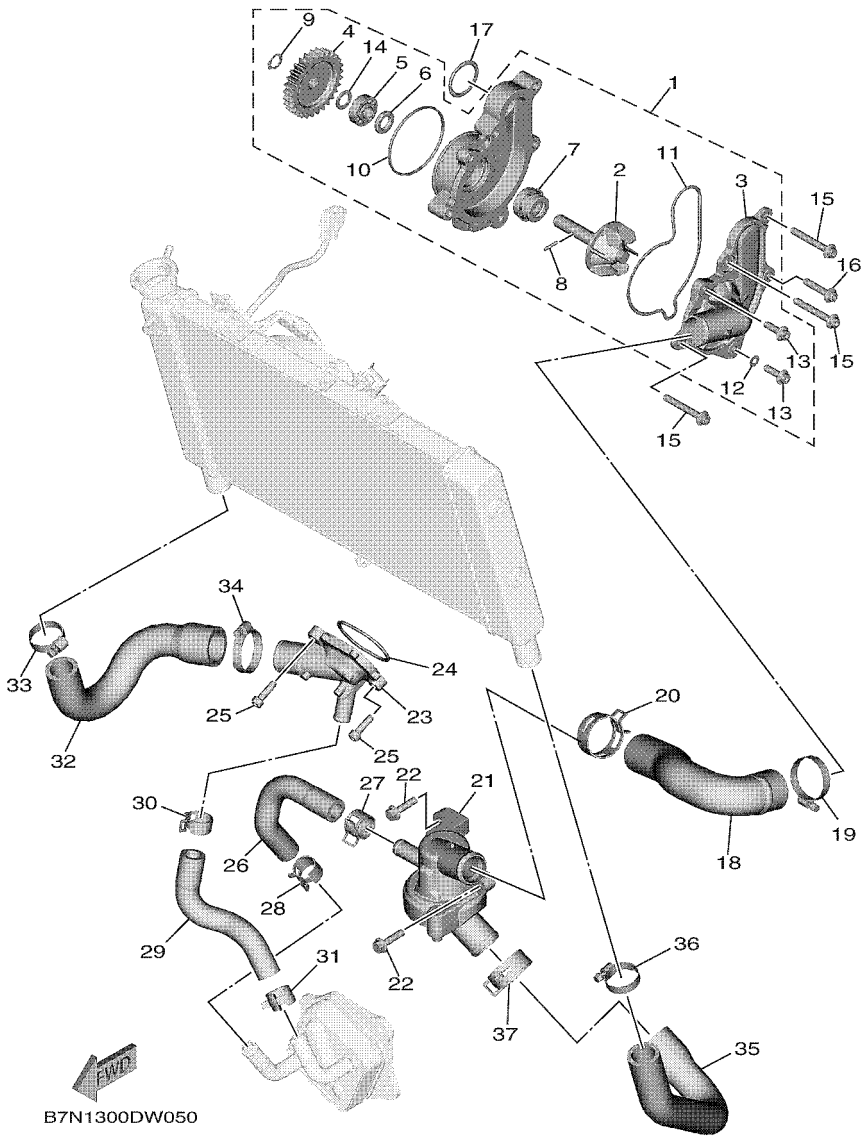

FIG. 6 WATER PUMP

REF. NO.	PART NO.	DESCRIPTION	BHX2					REMARKS
1	B7N–12420–00	WATER PUMP ASSY	1					
2	1RC–12450–10	.IMPELLER SHAFT ASSY	1					
3	B7N–12422–00	.COVER, HOUSING	1					
4	1RC–12459–00	.GEAR, IMPELLER SHAFT	1					
5	93306–00106	.BEARING	1					
6	93101–12173	.OIL SEAL	1					
7	5VK–12438–00	.SEAL, MECHANICAL	1					
8	1RC–1319L–10	.PIN, STRAIGHT	1					
9	99009–12400	.CIRCLIP	1					
10	93210–61750	.O-RING	1					
11	1RC–12439–00	.O-RING	1					
12	90430–06014	.GASKET	1					
13	90110–06396	.BOLT, HEXAGON SOCKET HEAD	2					
14	90201–12541	.WASHER, PLATE	1					
15	90110–06394	BOLT, HEXAGON SOCKET HEAD	3					
16	90110–06388	BOLT, HEXAGON SOCKET HEAD	1					
17	93210–30694	O-RING	1					
18	1RC–12577–00	HOSE 2	1					
19	90450–38040	HOSE CLAMP ASSY	1					
20	90467–310A0	CLIP	1					
21	B7N–12410–00	THERMOSTAT ASSY	1					
22	95822–06025	BOLT, FLANGE	2					
23	1RC–12469–00	JOINT 1	1					
24	93210–46044	O-RING	1					
25	90110–06175	BOLT, HEXAGON SOCKET HEAD	2					
26	BS2–12578–00	HOSE 3	1					
27	90467–21068	CLIP	1					

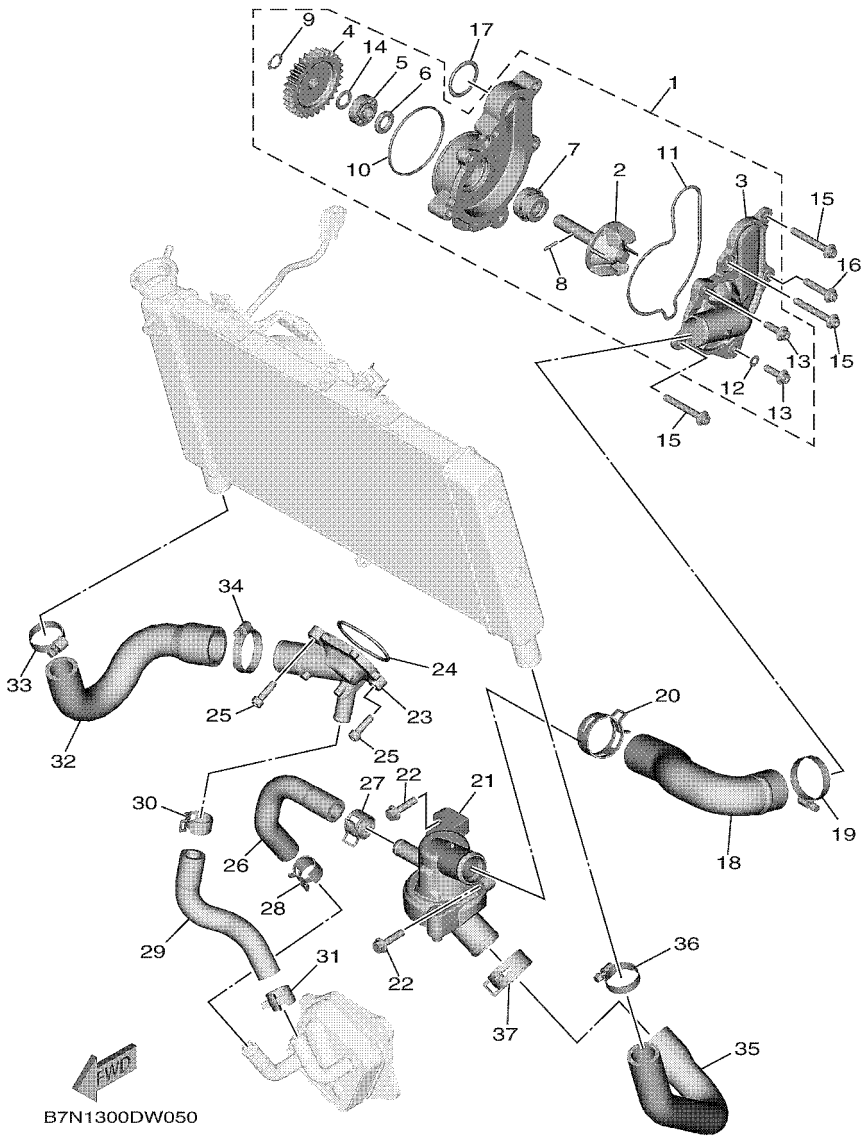

FIG. 6 WATER PUMP

REF. NO.	PART NO.	DESCRIPTION	BHX2					REMARKS
28	90467–200A0	CLIP	1					
29	BS2–12579–00	HOSE 4	1					
30	90467–22002	CLIP	1					
31	90467–200A0	CLIP	1					
32	B7N–12588–00	HOSE 5	1					
33	90450–32003	HOSE CLAMP ASSY	1					
34	90450–38040	HOSE CLAMP ASSY	1					
35	B7N–12576–00	HOSE 1	1					
36	90450–32003	HOSE CLAMP ASSY	1					
37	90467–310A0	CLIP	1					

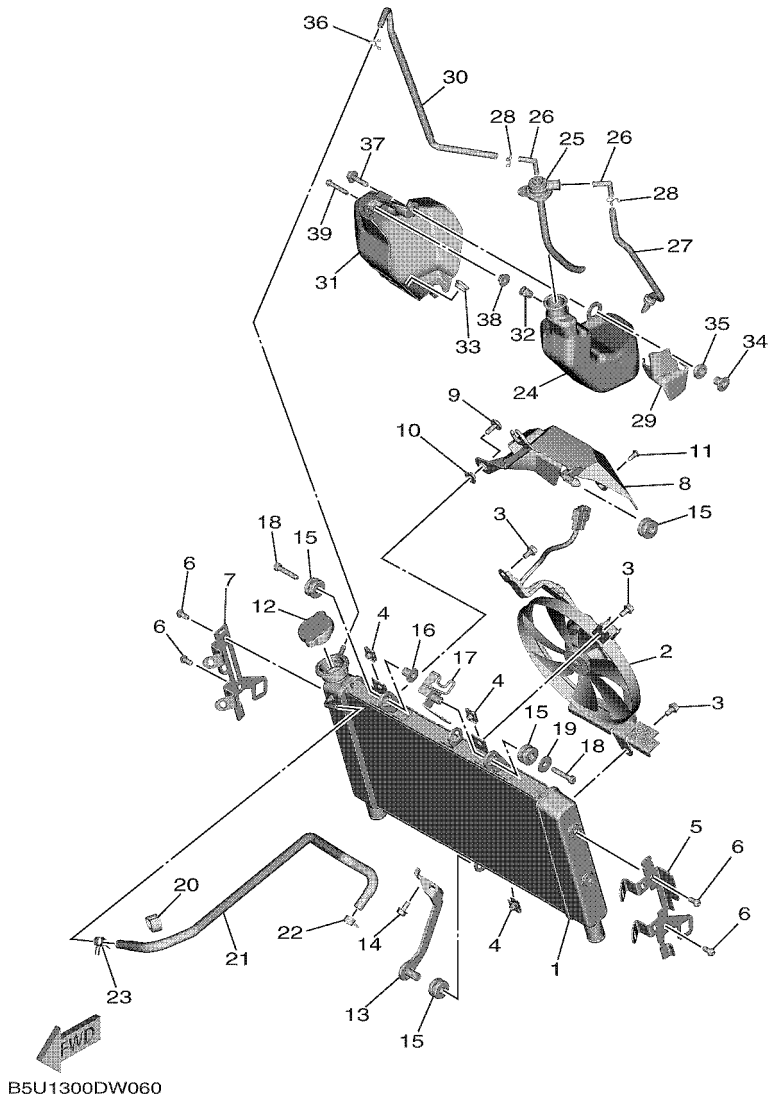

FIG. 7 RADIATOR & HOSE

REF. NO.	PART NO.	DESCRIPTION	BHX2					REMARKS
1	B7N–12461–00	RADIATOR COMP	1					
2	B7N–12405–00	BLOWER ASSY	1					
3	5GJ–12675–00	BOLT, BLOWER HOLDING	3					
4	5YP–E2671–00	NUT 1	3					
5	B5U–1244E–00	BRACKET 1	1					
6	90111–06103	BOLT, HEXAGON SOCKET BUTTON	4					
7	B5U–1244F–00	BRACKET 2	1					
8	B7N–12467–00	COVER, RADIATOR	1					
9	90111–06161	BOLT, HEXAGON SOCKET BUTTON	1					
10	90387–07717	COLLAR	1					
11	90269–05005	RIVET	1					
12	5SL–12462–00	CAP, RADIATOR	1					
13	B7N–12638–00	STAY 2	1					
14	95D32–06012	BOLT, FLANGE DEEP RECESS	1					
15	90480–15363	GROMMET	4					
16	90387–06158	COLLAR	1					
17	B7N–26132–00	GUIDE, CABLE 2	1					
18	91342–06030	BOLT	2					
19	90201–06033	WASHER, PLATE	1					
20	90464–14010	CLAMP	1					
21	B7N–1243A–00	HOSE 1	1					
22	90467–10039	CLIP	1					
23	90467–10039	CLIP	1					
24	1RC–21871–00	TANK, RECOVERY	1					
25	B7N–21875–00	CAP	1					
26	1RC–21828–00	ELBOW	2					
27	B7N–21826–00	PIPE, BREATHER	1					

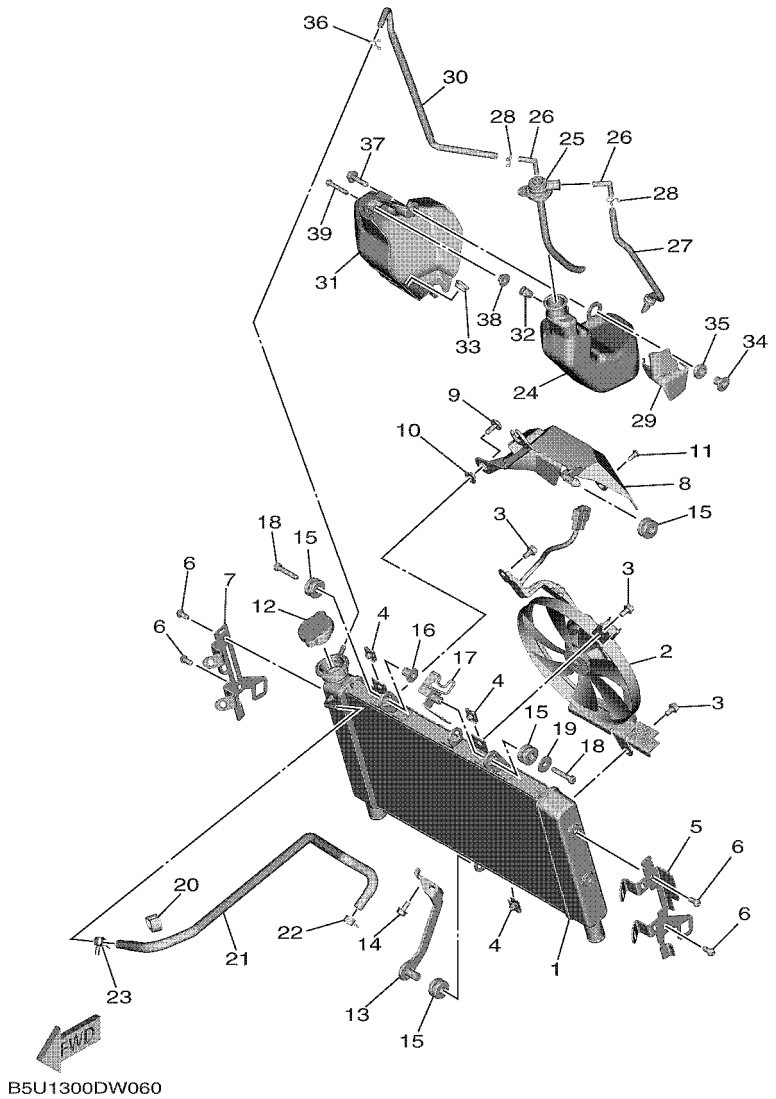

FIG. 7 RADIATOR & HOSE

REF. NO.	PART NO.	DESCRIPTION	BHX2					REMARKS
28	90467–08075	CLIP	2					
29	B7N–22825–00	PROTECTOR 1	1					
30	B7N–21816–00	PIPE 1	1					
31	1RC–2172W–00	COVER	1					
32	90179–05523	NUT	1					
33	90480–13203	GROMMET	1					
34	90387–06285	COLLAR	1					
35	1RC–21749–00	COLLAR	1					
36	90467–08075	CLIP	1					
37	90110–06233	BOLT, HEXAGON SOCKET HEAD	1					
38	1RC–21748–00	COLLAR	1					
39	92012–05030	BOLT, BUTTON HEAD	1					

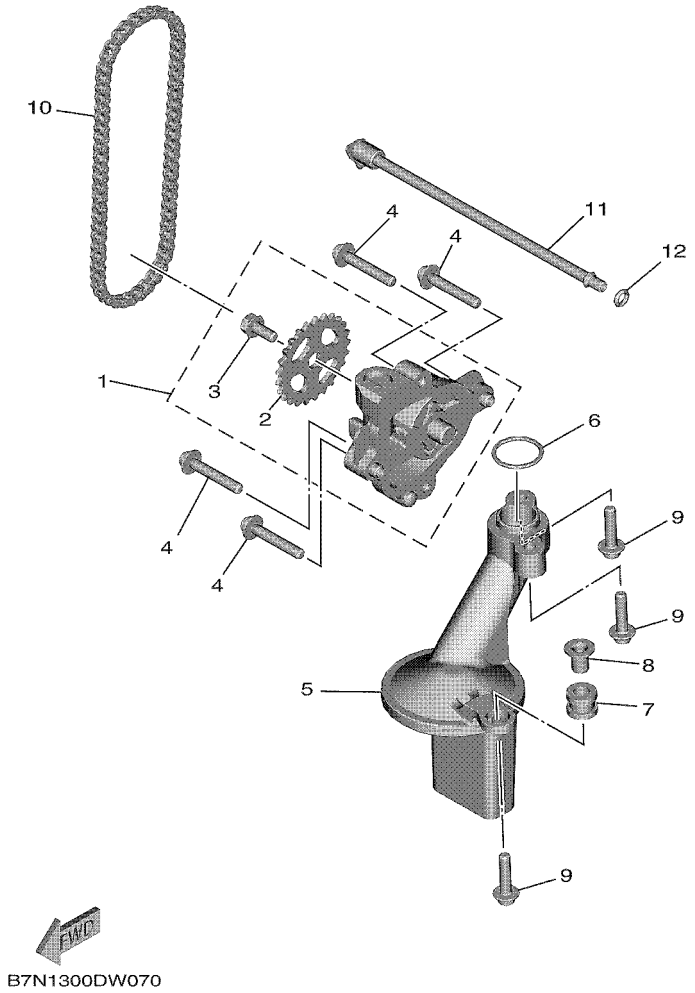

FIG. 8 OIL PUMP

REF. NO.	PART NO.	DESCRIPTION	BHX2					REMARKS
1	B7N–13300–00	OIL PUMP ASSY	1					
2	1RC–13355–00	.SPROCKET, DRIVEN	1					
3	90105–06066	.BOLT, FLANGE	1					
4	90110–06432	BOLT, HEXAGON SOCKET HEAD	4					
5	B7N–13410–00	STRAINER HOUSING ASSY	1					
6	93210–22001	O-RING	1					
7	90480–13010	GROMMET	1					
8	5VY–13117–10	COLLAR, DISTANCE	1					
9	90110–06173	BOLT, HEXAGON SOCKET HEAD	3					
10	94581–79066	CHAIN (DID 25H)	1					
11	B7N–1316E–00	PIPE, DELIVERY 5	1					
12	93210–06667	O-RING	1					

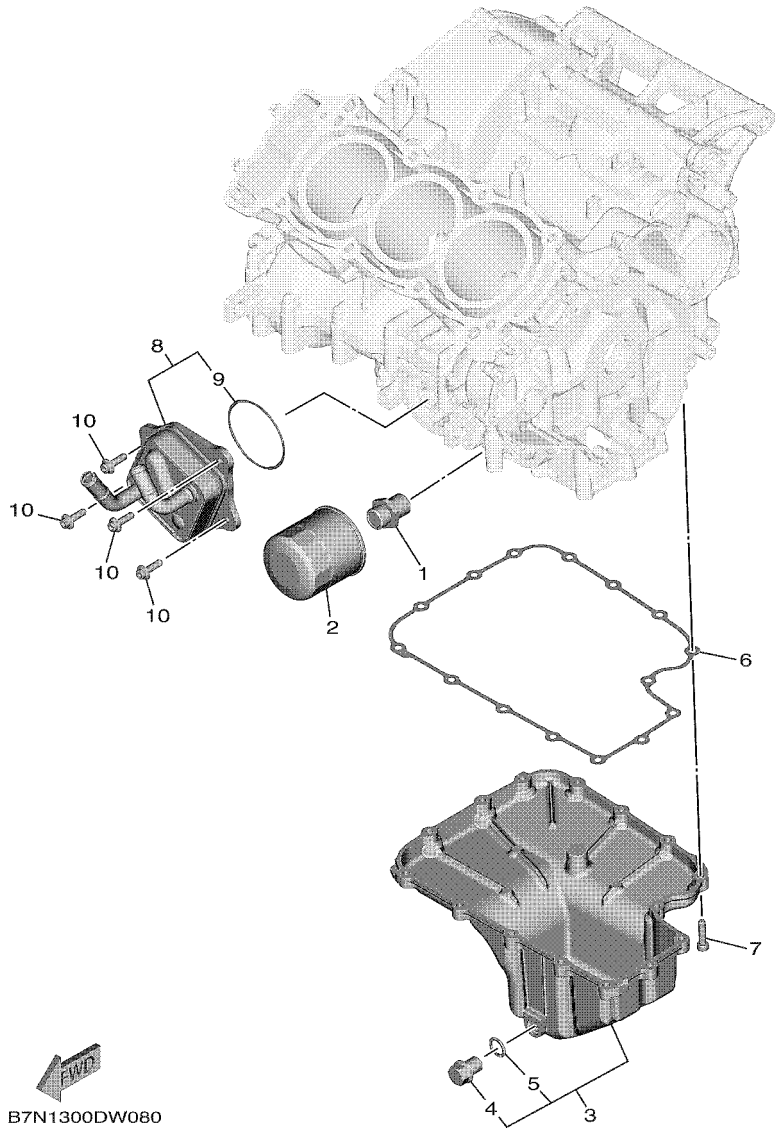

FIG. 9 OIL CLEANER

REF. NO.	PART NO.	DESCRIPTION	BHX2					REMARKS
1	90401–20012	BOLT, UNION	1					
2	5GH–13440–61	ELEMENT ASSY, OIL CLEANER	1					
3	B7N–13400–01	STRAINER COVER ASSY	1					
4	90340–14132	.PLUG, STRAIGHT SCREW	1					
5	214–11198–01	.GASKET	1					
6	B7N–13414–00	GASKET, STRAINER COVER	1					
7	90110–06390	BOLT, HEXAGON SOCKET HEAD	15					
8	BS2–13470–10	OIL COOLER ASSY	1					
9	2HC–13473–00	.O-RING	1					
10	90110–06164	BOLT, HEXAGON SOCKET HEAD	4					

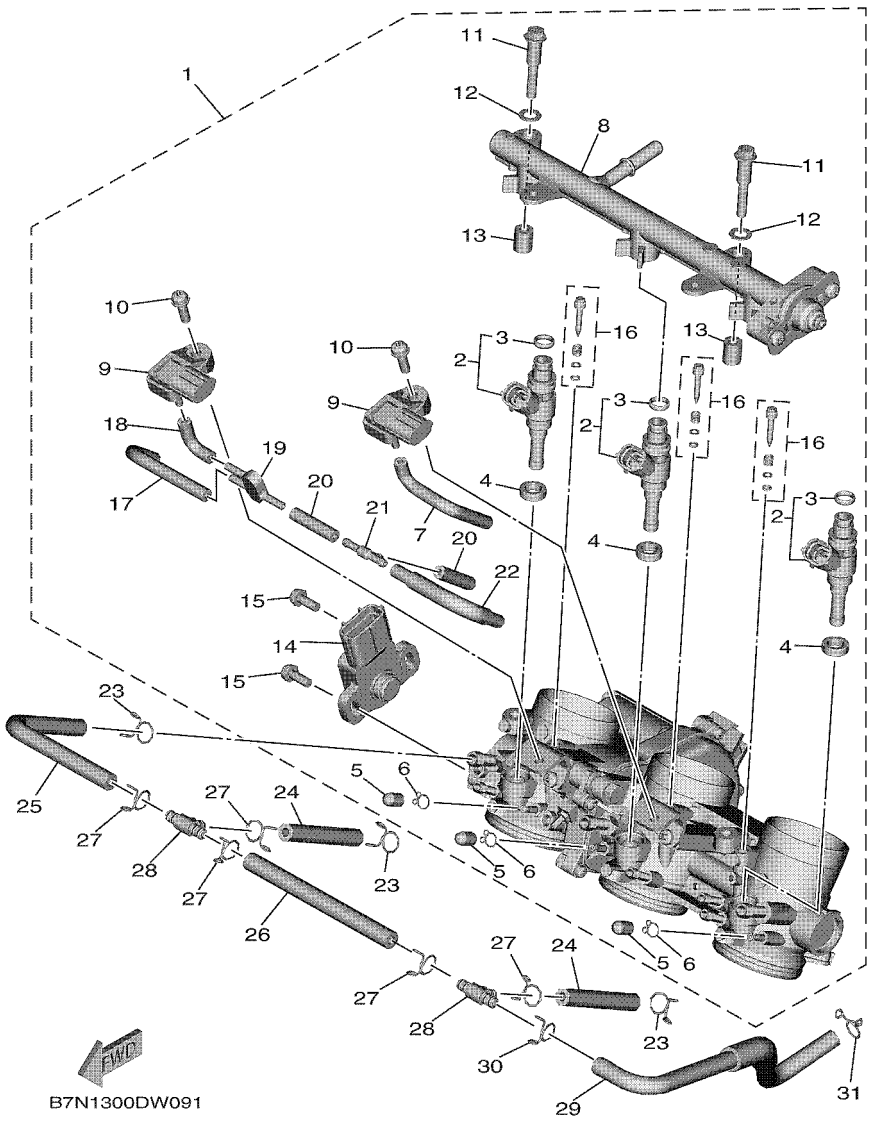

FIG. 10 INTAKE

REF. NO.	PART NO.	DESCRIPTION	BHX2					REMARKS
1	B7N–13750–02	THROTTLE BODY ASSY	1					
2	B7N–13761–00	.INJECTOR	3					
3	5PS–14147–00	..O-RING	1					
4	8FP–13556–00	.RUBBER, INJECTOR	3					
5	895–14169–00	.CAP	3					
6	8A7–14139–00	.CLIP, PIPE	3					
7	68V–13533–00	.HOSE, VACUUM SENSING 4	1					
8	B7N–13930–00	.PIPE INLET ASSEMBLY	1					
9	1WS–82380–00	.SENSOR, PRESSURE	2					
10	2C0–14216–00	.SCREW	2					
11	8HG–13573–00	.BOLT 1	2					
12	8GL–13571–00	.WASHER	2					
13	8HG–14534–00	.COLLAR	2					
14	B3L–85885–01	.THROTTLE SENSOR ASSY	1					
15	8CC–14216–10	.SCREW	2					
16	2C0–14105–00	.PILOT SCREW SET	3					
17	5FL–14348–00	.PIPE 1	1					
18	8FP–14349–00	.PIPE	1					
19	3XV–14251–00	.NIPPLE	1					
20	5FL–14348–10	.PIPE 1	2					
21	68V–24376–00	.PIPE, JOINT 1	1					
22	B7N–13542–00	.HOSE, VACUUM SENSING 1	1					
23	90467–100A1	CLIP	3					
24	90445–10066	HOSE	2					
25	90445–10638	HOSE (L145)	1					
26	90445–10007	HOSE (L110)	1					
27	90467–100A1	CLIP	5					

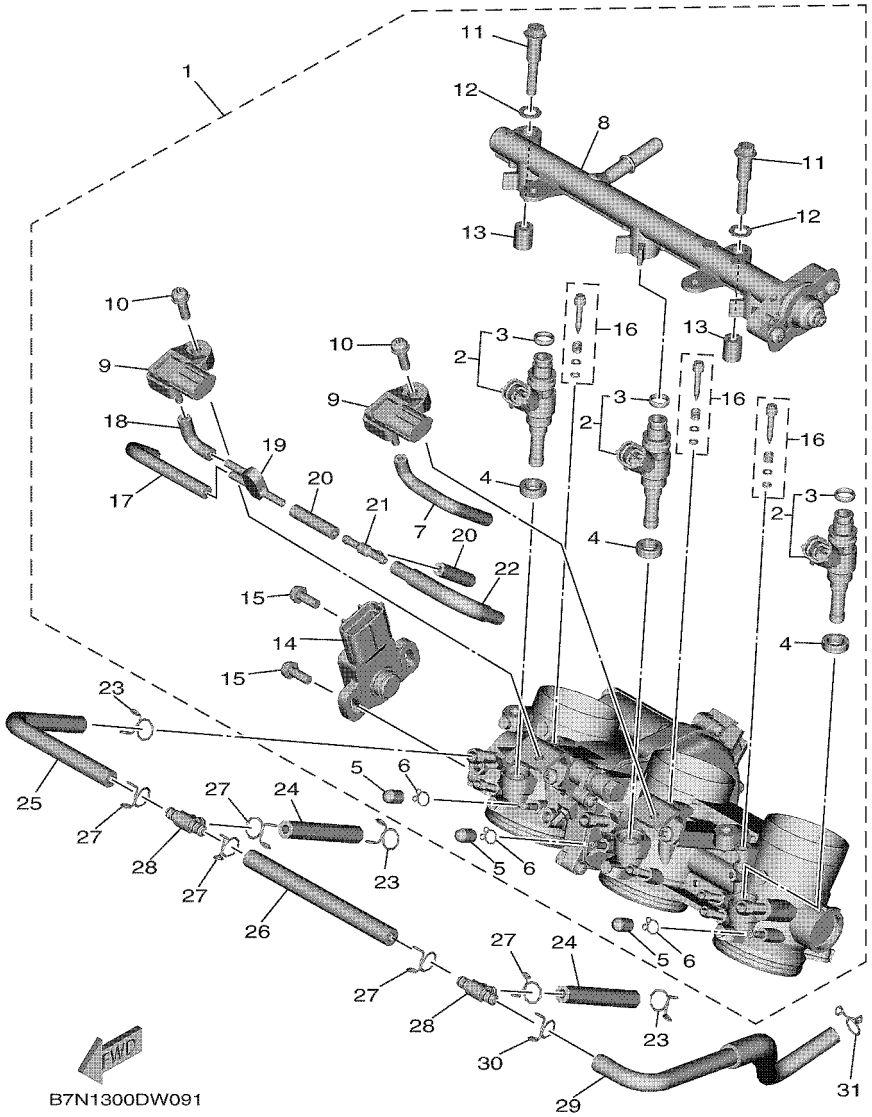

FIG. 10 INTAKE

REF. NO.	PART NO.	DESCRIPTION	BHX2					REMARKS
28	90413–06031	WAY 3	2					
29	B7N–1443J–00	PIPE	1					
30	90467–09103	CLIP	1					
31	90467–090A2	CLIP	1					

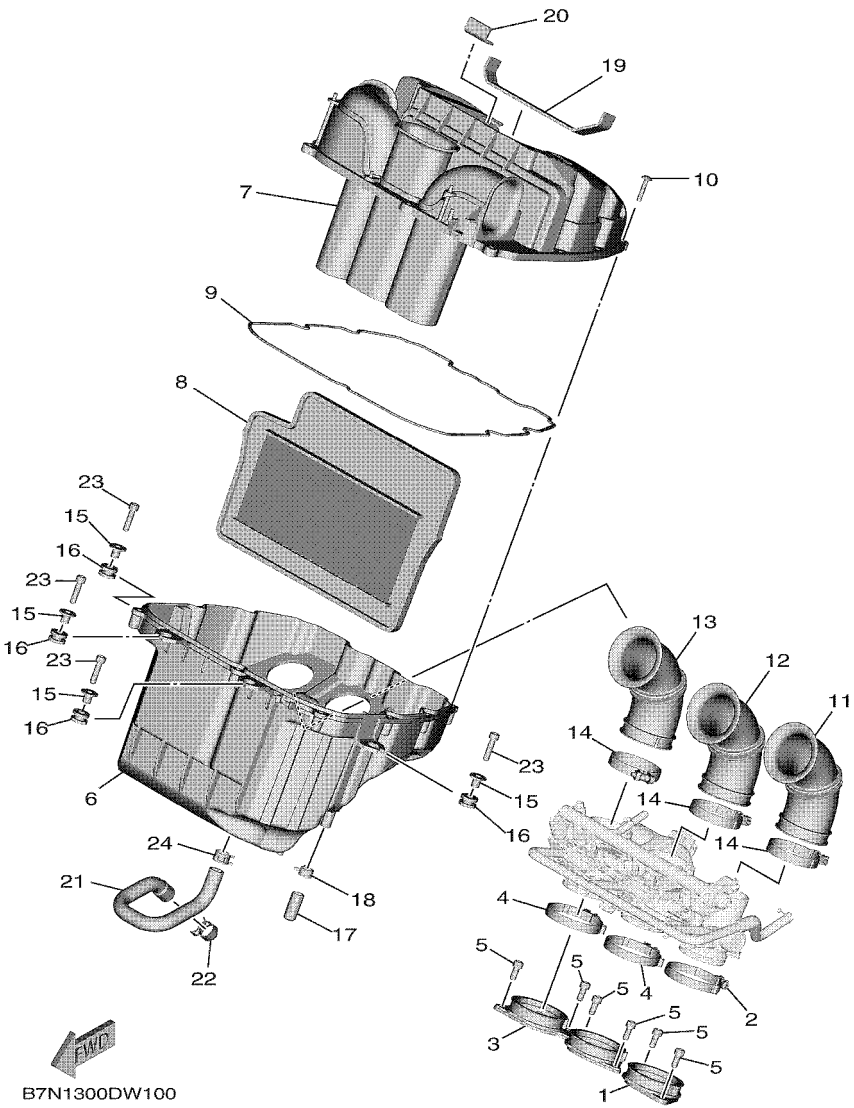

FIG. 11 INTAKE 2

REF. NO.	PART NO.	DESCRIPTION	BHX2					REMARKS
1	B7N–13635–00	JOINT, INTAKE 1	1					
2	90450–58008	HOSE CLAMP ASSY	1					
3	B7N–13636–00	JOINT, INTAKE 2	1					
4	90450–58008	HOSE CLAMP ASSY	2					
5	90110–06168	BOLT, HEXAGON SOCKET HEAD	6					
6	B7N–14411–01	CASE, AIR CLEANER 1	1					
7	B7N–14402–01	CAP ASSY, AIR CLEANER	1					
8	B7N–14451–01	ELEMENT, AIR CLEANER	1					
9	14B–14452–00	SEAL	1					
10	90160–05013	SCREW, ROUND TAPPING	10					
11	B7N–14453–00	JOINT, AIR CLEANER 1	1					
12	B7N–14463–00	JOINT, AIR CLEANER 2	1					
13	B7N–14454–00	JOINT	1					
14	90450–53007	HOSE CLAMP ASSY	3					
15	90387–06205	COLLAR	4					
16	90480–12314	GROMMET	4					
17	1WS–1443E–00	PIPE, DRAIN	1					
18	90467–13083	CLIP	1					
19	B7N–14425–00	DAMPER 1	1					
20	B7N–14426–01	DAMPER 2	1					
21	B7N–15393–00	PIPE, BREATHER 2	1					
22	90467–17003	CLIP	1					
23	90110–06232	BOLT, HEXAGON SOCKET HEAD	4					
24	90467–15001	CLIP	1					

FIG. 12 EXHAUST

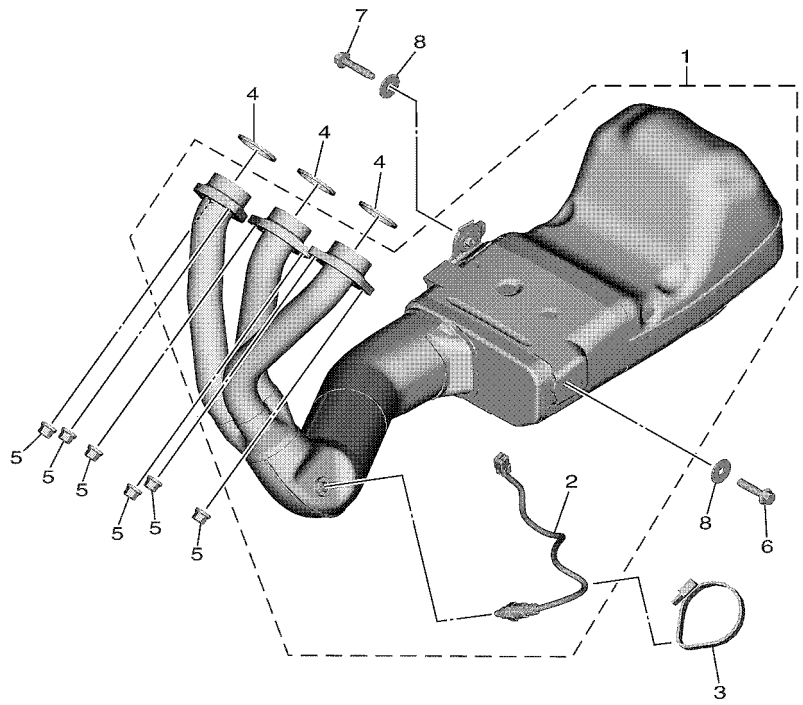

B7N1300DW110

REF. NO.	PART NO.	DESCRIPTION	BHX2					REMARKS
1	B7N–14710–02	MUFFLER ASSY 1	1					
2	1WS–8592A–10	.SENSOR, OXYGEN	1					
3	90464–65001	CLAMP	1					
4	4FM–14613–00	GASKET, EXHAUST PIPE	3					
5	90179–08410	NUT	6					
6	95812–08035	BOLT, FLANGE	1					
7	90109–08170	BOLT	1					
8	90201–087G2	WASHER, PLATE	2					

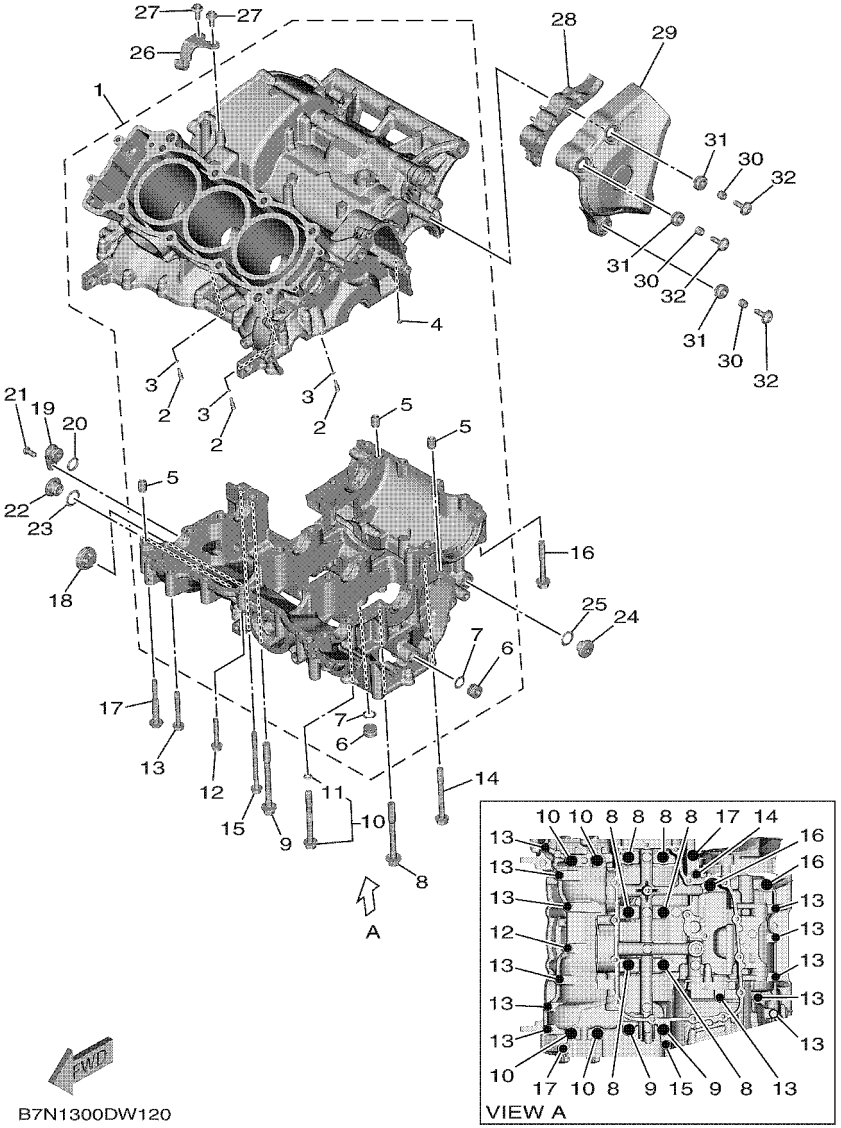

FIG. 13 CRANKCASE

REF. NO.	PART NO.	DESCRIPTION	BHX2					REMARKS
1	B7N–15100–09	CRANKCASE ASSY	1					MDNM9
2	5EB–15155–00	.NOZZLE 3	3					
3	93210–04092	.O-RING	3					
4	B7N–15138–00	.NOZZLE 1	1					
5	99530–10014	.PIN, DOWEL	3					
6	90338–16262	.PLUG	2					
7	93210–12790	.O-RING	2					
8	90119–09013	BOLT, WITH WASHER	6					
9	90119–09010	BOLT, WITH WASHER	2					
10	23P–15156–00	BOLT, CRANKCASE JOURNAL	4					
11	93210–07540	.O-RING	1					
12	95812–06040	BOLT, FLANGE	1					
13	95812–06050	BOLT, FLANGE	12					
14	95812–06065	BOLT, FLANGE	1					
15	90105–06202	BOLT, FLANGE	1					
16	95812–08060	BOLT, FLANGE	2					
17	90109–06100	BOLT	2					
18	2H7–15361–00	GAUGE, LEVEL	1					
19	2CR–15319–01	JOINT	1					
20	93210–13657	O-RING	1					
21	90149–06068	SCREW	1					
22	36Y–15189–00	PLUG	1					
23	93210–16325	O-RING	1					
24	90340–14011	PLUG, STRAIGHT SCREW	1					
25	93210–14369	O-RING	1					
26	B7N–15441–00	HOLDER, CLUTCH CABLE	1					
27	90110–06431	BOLT, HEXAGON SOCKET HEAD	2					

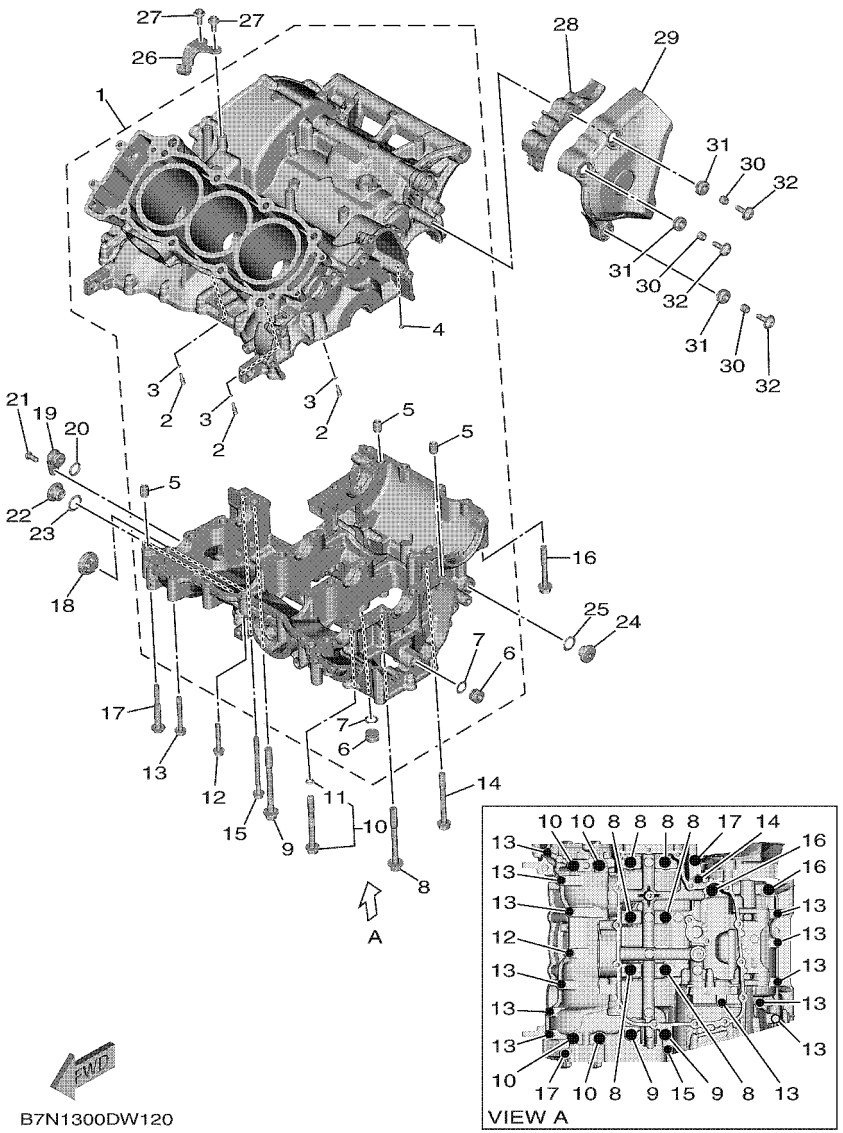

FIG. 13 CRANKCASE

REF. NO.	PART NO.	DESCRIPTION	BHX2					REMARKS
28	B7N–15377–00	GUIDE, INLET	1					
29	B7N–15418–00	COVER, CHAIN CASE	1					
30	90387–06286	COLLAR	3					
31	90480–13018	GROMMET	3					
32	90111–06188	BOLT, HEXAGON SOCKET BUTTON	3					

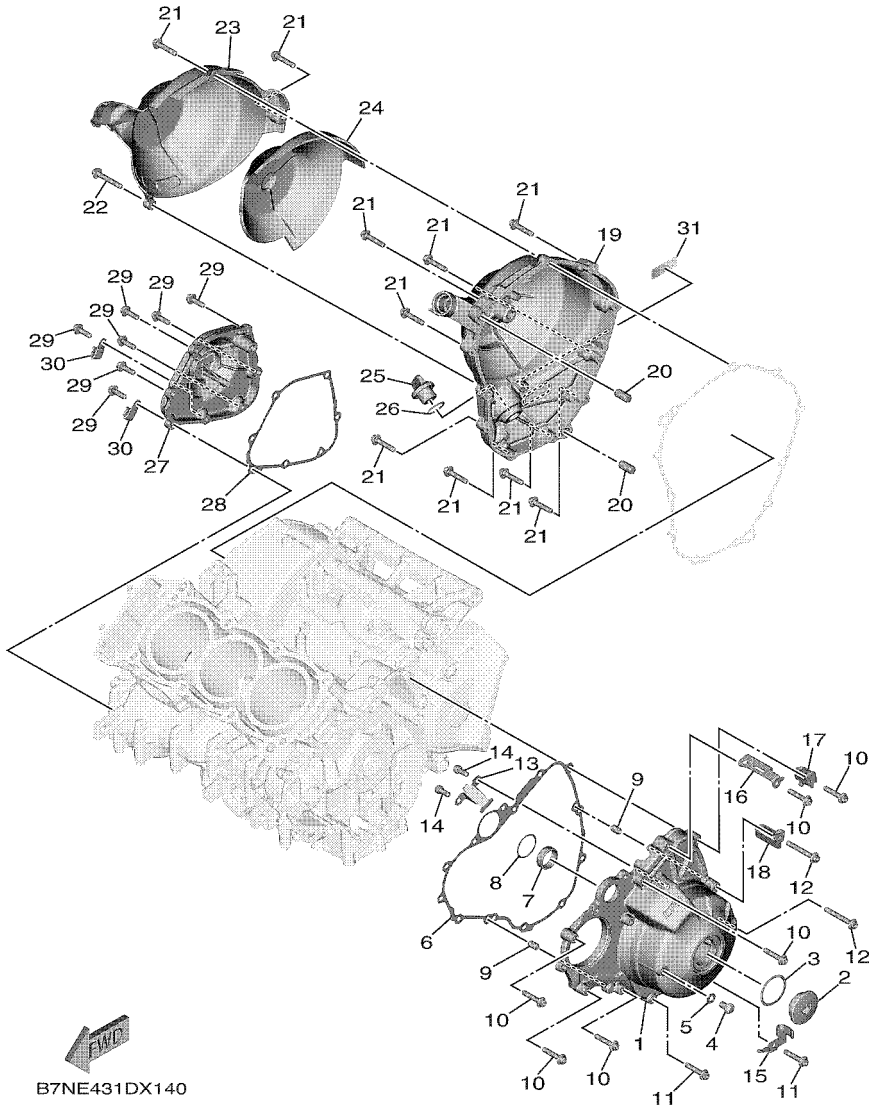

FIG. 14 CRANKCASE COVER 1

REF. NO.	PART NO.	DESCRIPTION	BHX2					REMARKS
1	B7N–15411–00	COVER, CRANKCASE 1	1					MDNM9
2	90340–36008	PLUG, STRAIGHT SCREW	1					
3	93210–357A3	O-RING	1					
4	92017–08012	BOLT, BUTTON HEAD	1					
5	90430–08143	GASKET	1					
6	BD5–15451–00	GASKET, CRANKCASE COVER 1	1					
7	1RC–12564–00	PIPE, WATER	1					
8	93210–28543	O-RING	1					
9	99530–08012	PIN, DOWEL	2					
10	90110–06388	BOLT, HEXAGON SOCKET HEAD	6					
11	90110–06389	BOLT, HEXAGON SOCKET HEAD	2					
12	90110–06394	BOLT, HEXAGON SOCKET HEAD	2					
13	1RC–15484–00	CLAMP 2	1					
14	90110–06168	BOLT, HEXAGON SOCKET HEAD	2					
15	B7N–15199–00	BRACKET	1					
16	B7N–14867–00	BRACKET	1					
17	B7N–14868–00	BRACKET 2	1					
18	B7N–14869–00	BRACKET 3	1					
19	B7N–15421–00	COVER, CRANKCASE 2	1					MDNM9
20	93610–20189	PIN, DOWEL	2					
21	90110–06388	BOLT, HEXAGON SOCKET HEAD	10					
22	90110–06321	BOLT, HEXAGON SOCKET HEAD	1					
23	B7N–15499–00	PROTECTOR, COVER	1					
24	B7N–15789–00	DAMPER	1					
25	5GJ–15363–10	PLUG, OIL	1					
26	93210–19123	O-RING	1					
27	B7N–15416–00	COVER, OIL PUMP	1					MDNM9

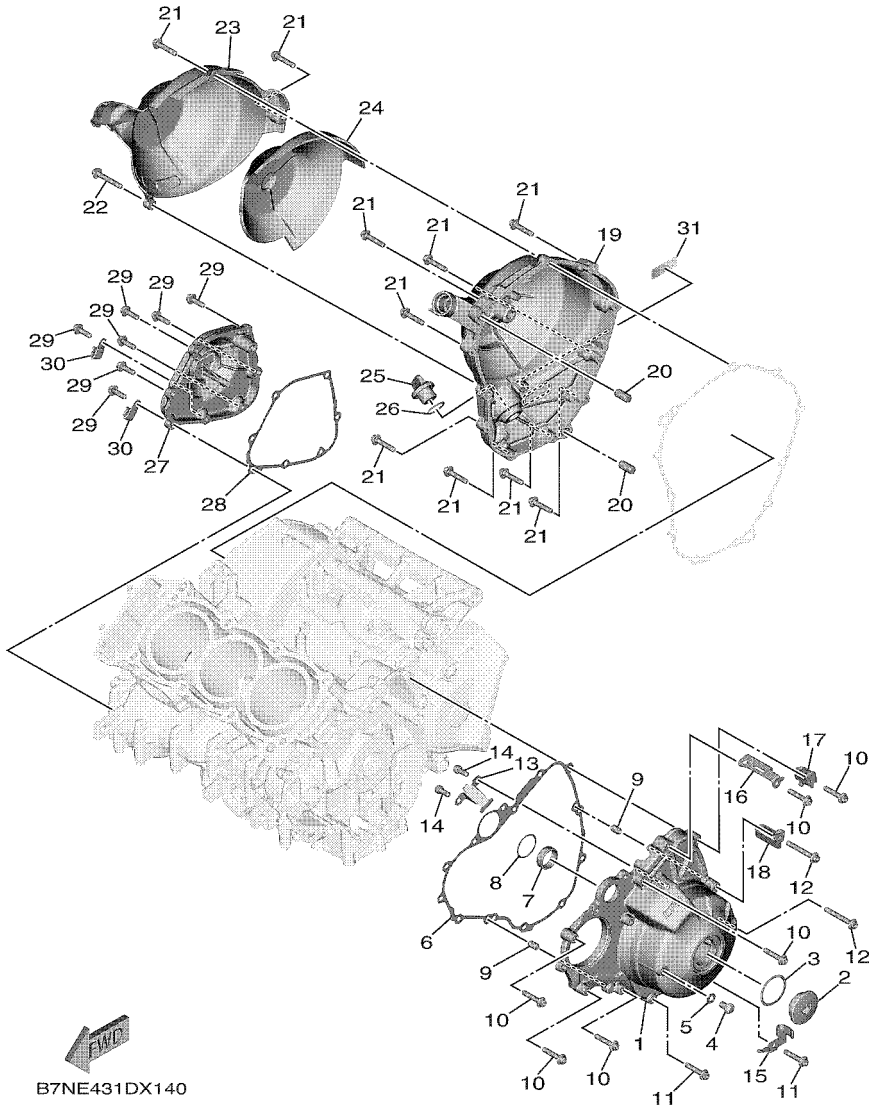

FIG. 14 CRANKCASE COVER 1

REF. NO.	PART NO.	DESCRIPTION	BHX2					REMARKS
28	B7N–15456–00	GASKET, OIL PUMP COVER 1	1					
29	90110–06396	BOLT, HEXAGON SOCKET HEAD	7					
30	90465–06M90	CLAMP	2					
31	B5Y–1548B–00	OIL, LABEL	1					

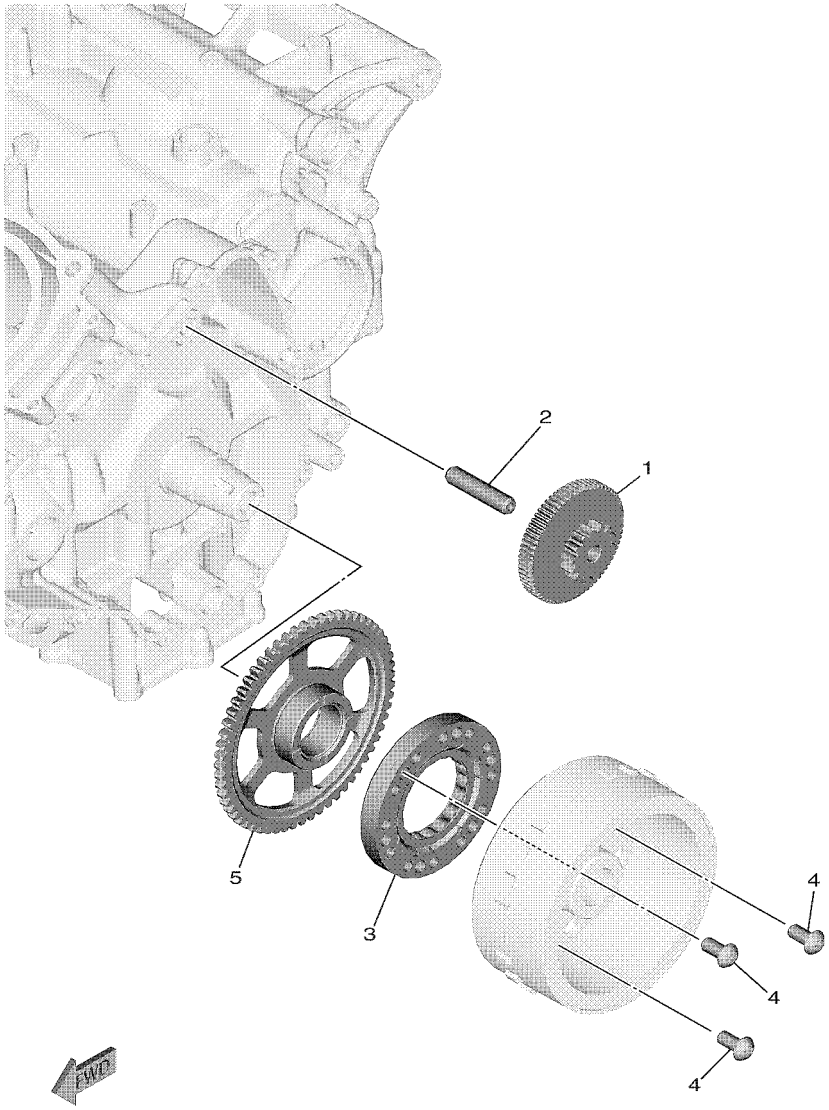

B7N1300DW140

FIG. 15 STARTER

REF. NO.	PART NO.	DESCRIPTION	BHX2					REMARKS
1	1RC–15512–10	GEAR, IDLER 1	1					
2	5EB–15521–00	SHAFT 1	1					
3	1RC–15590–00	STARTER ONE-WAY ASSY	1					
4	90149–08030	SCREW	3					
5	1RC–15515–10	GEAR 3	1					

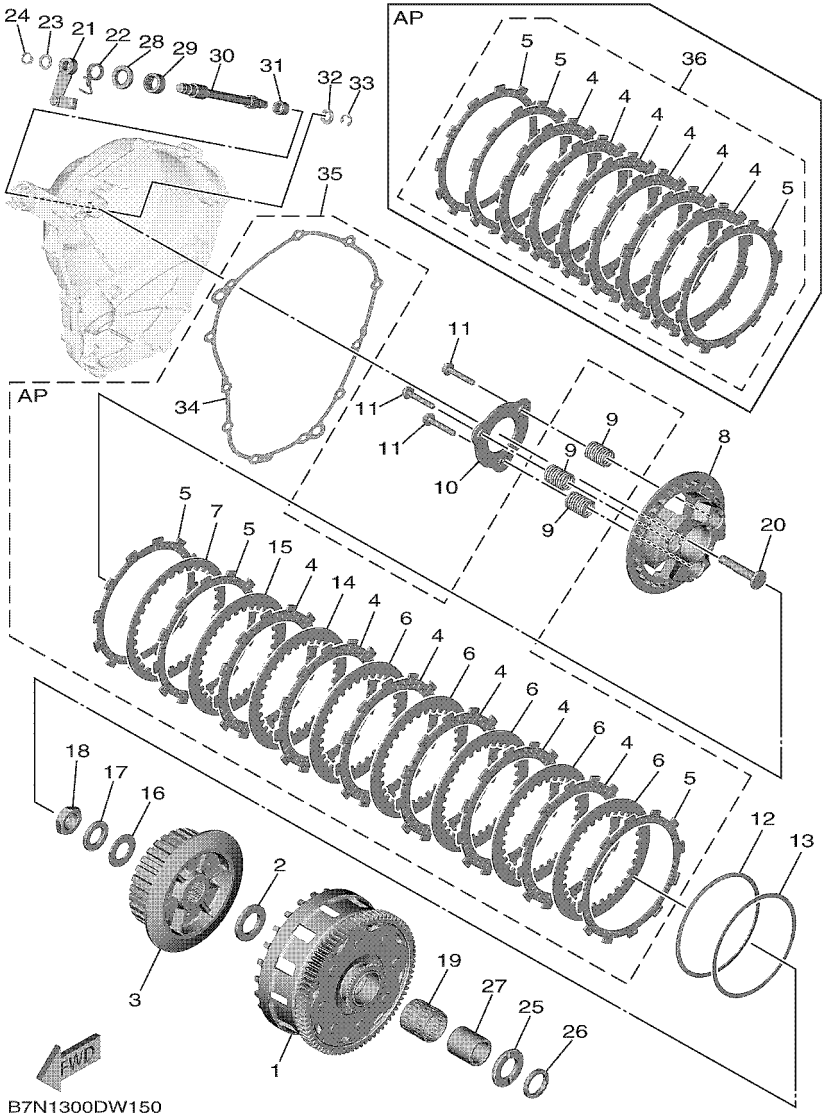

FIG. 16 CLUTCH

REF. NO.	PART NO.	DESCRIPTION	BHX2					REMARKS
1	B7N–16150–00	PRIMARY DRIVEN GEAR COMP.	1					
2	363–16154–00	PLATE, THRUST 1	1					
3	B7N–16371–00	BOSS, CLUTCH	1					
4	B7N–16321–00	PLATE, FRICTION	6					
5	B90–16331–00	PLATE, FRICTION 2	3					
6	5VY–16325–00	PLATE, CLUTCH 2	5					(T2.0)
7	1TD–16324–00	PLATE, CLUTCH 1	1					(T2.3)
8	B7N–16350–00	PRESSURE PLATE ASSY	1					
9	B7N–16173–00	SPRING, COMPRESSION	3					
10	B90–16352–00	PLATE, PRESSURE 2	1					
11	2CR–16337–00	SCREW, SPRING	3					
12	1TD–16383–01	SPRING.,CUSHION	1					
13	1TD–16384–00	PLATE, SEAT	1					
14	4B1–16325–00	PLATE, CLUTCH 2	1					UR (T2.3)
	BR9–16324–00	PLATE, CLUTCH 1	1					UR (T1.6)
	5VY–16325–00	PLATE, CLUTCH 2	1					UR (T2.0)
15	4B1–16325–00	PLATE, CLUTCH 2	1					UR (T2.3)
	BR9–16324–00	PLATE, CLUTCH 1	1					UR (T1.6)
	5VY–16325–00	PLATE, CLUTCH 2	1					UR (T2.0)
16	90201–20030	WASHER, PLATE	1					
17	90208–20001	WASHER, CONICAL SPRING	1					
18	90179–20010	NUT	1					
19	93310–33277	BEARING	1					
20	B7N–16356–00	ROD, PUSH 1	1					
21	1RC–16340–00	PUSH LEVER ASSY	1					
22	90508–18051	SPRING, TORSION	1					
23	90201–10029	WASHER, PLATE	1					

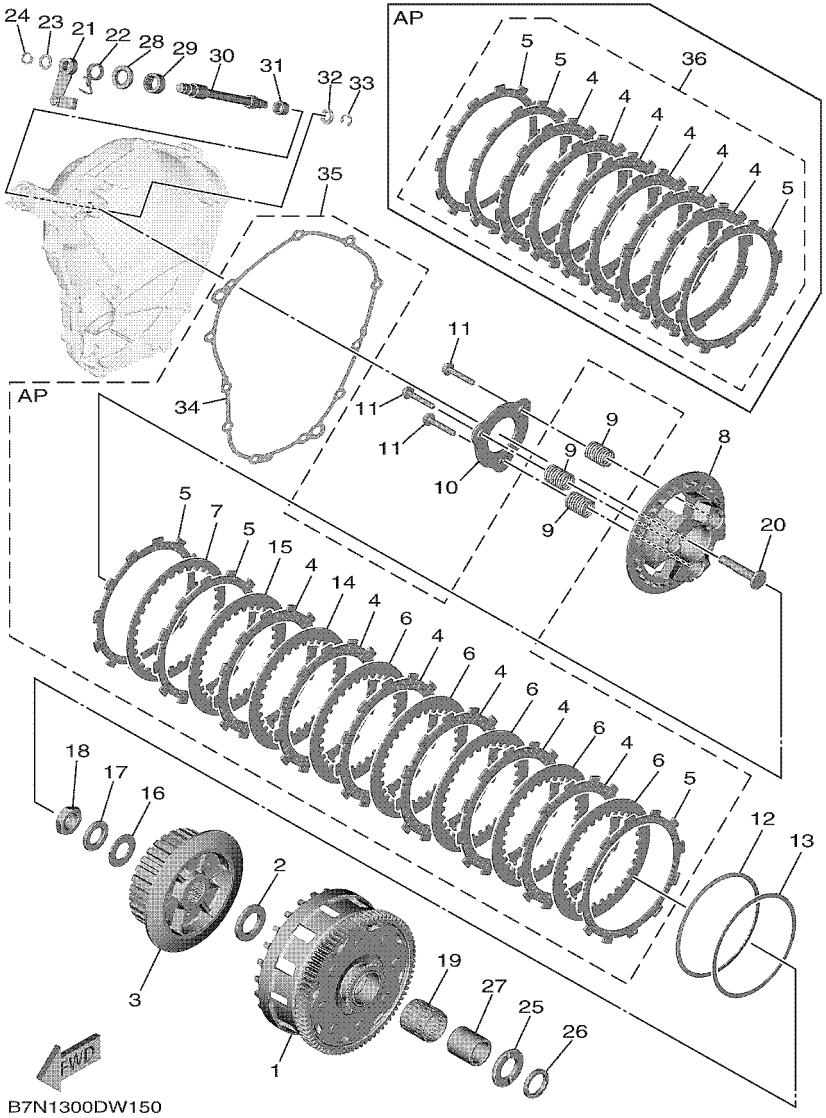

FIG. 16 CLUTCH

REF. NO.	PART NO.	DESCRIPTION	BHX2					REMARKS
24	99009–10400	CIRCLIP	1					
25	B7N–16164–00	PLATE, THRUST 2	1					
26	2C0–16164–00	PLATE, THRUST 2	1					
27	1RC–16181–00	SPACER 1	1					
28	93102–15212	OIL SEAL	1					
29	93315–21570	BEARING	1					
30	5VY–16382–10	AXLE, PUSH LEVER	1					
31	93317–11096	BEARING	1					
32	92907–08600	WASHER, PLATE	1					
33	99001–07600	CIRCLIP	1					
34	B7N–15461–00	GASKET, CRANKCASE COVER 2	1					
35	B7N–W001G–00	CLUTCH PLATE KIT	1					AP
36	B7N–W001M–00	FRICTION PLATE KIT	1					AP

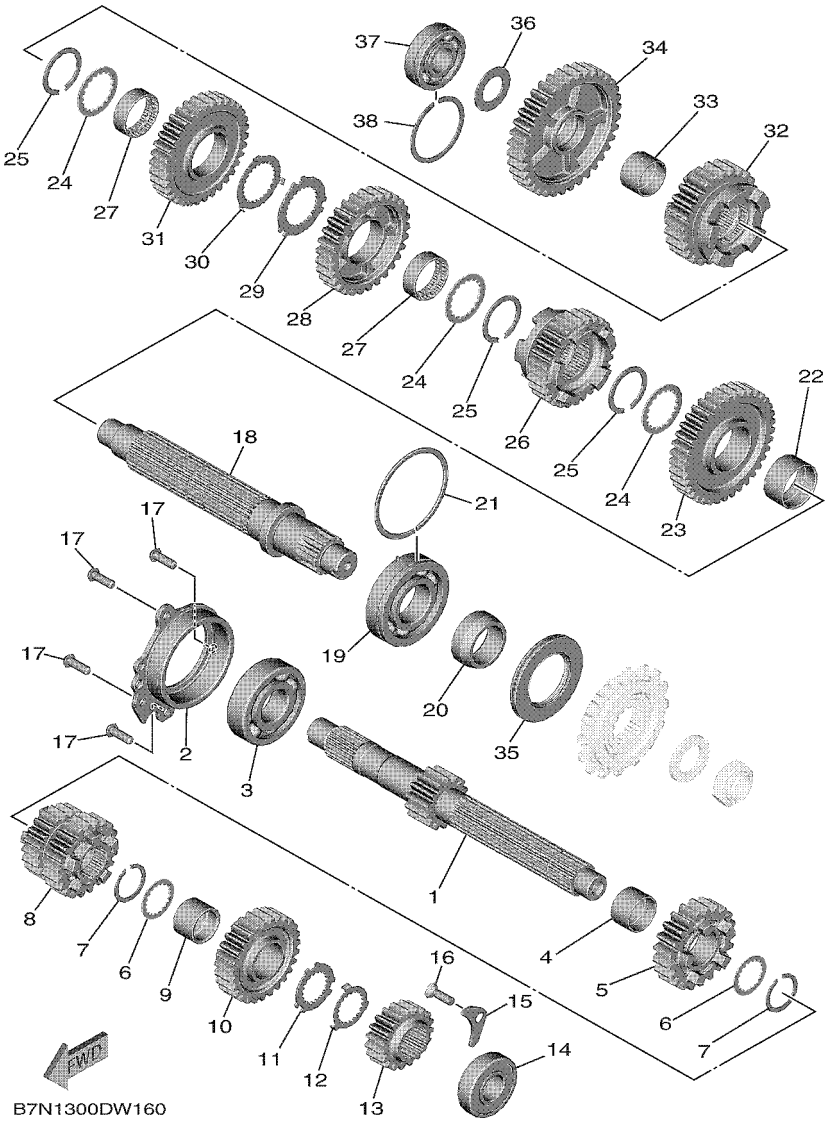

FIG. 17 TRANSMISSION

REF. NO.	PART NO.	DESCRIPTION	BHX2					REMARKS
1	B7N–17411–01	AXLE, MAIN (14T)	1					
2	B7N–15163–00	HOUSING, BEARING 1	1					
3	93306–30534	BEARING	1					
4	90387–25040	COLLAR	1					
5	B7N–17151–01	GEAR, 5TH PINION (21T)	1					
6	90209–22008	WASHER	2					
7	93440–25186	CIRCLIP	2					
8	B7N–17131–01	GEAR, 3RD PINION (21T/21T)	1					
9	90387–22006	COLLAR	1					
10	B7N–17161–01	GEAR, 6TH PINION (27T)	1					
11	90214–22003	WASHER, CLAW	1					
12	90214–22002	WASHER, CLAW	1					
13	B7N–17121–01	GEAR, 2ND PINION (19T)	1					
14	93306–20487	BEARING	1					
15	B7N–15381–00	PLATE, BEARING COVER	1					
16	90149–06086	SCREW	1					
17	90149–06213	SCREW	4					
18	B7N–17421–01	AXLE, DRIVE	1					
19	93306–20663	BEARING	1					
20	90387–30012	COLLAR	1					
21	93440–64199	CIRCLIP	1					
22	90387–31004	COLLAR	1					
23	B7N–17221–01	GEAR, 2ND WHEEL (37T)	1					
24	90209–28008	WASHER	3					
25	93440–31187	CIRCLIP	3					
26	B7N–17261–01	GEAR, 6TH WHEEL (28T)	1					
27	90387–28030	COLLAR	2					

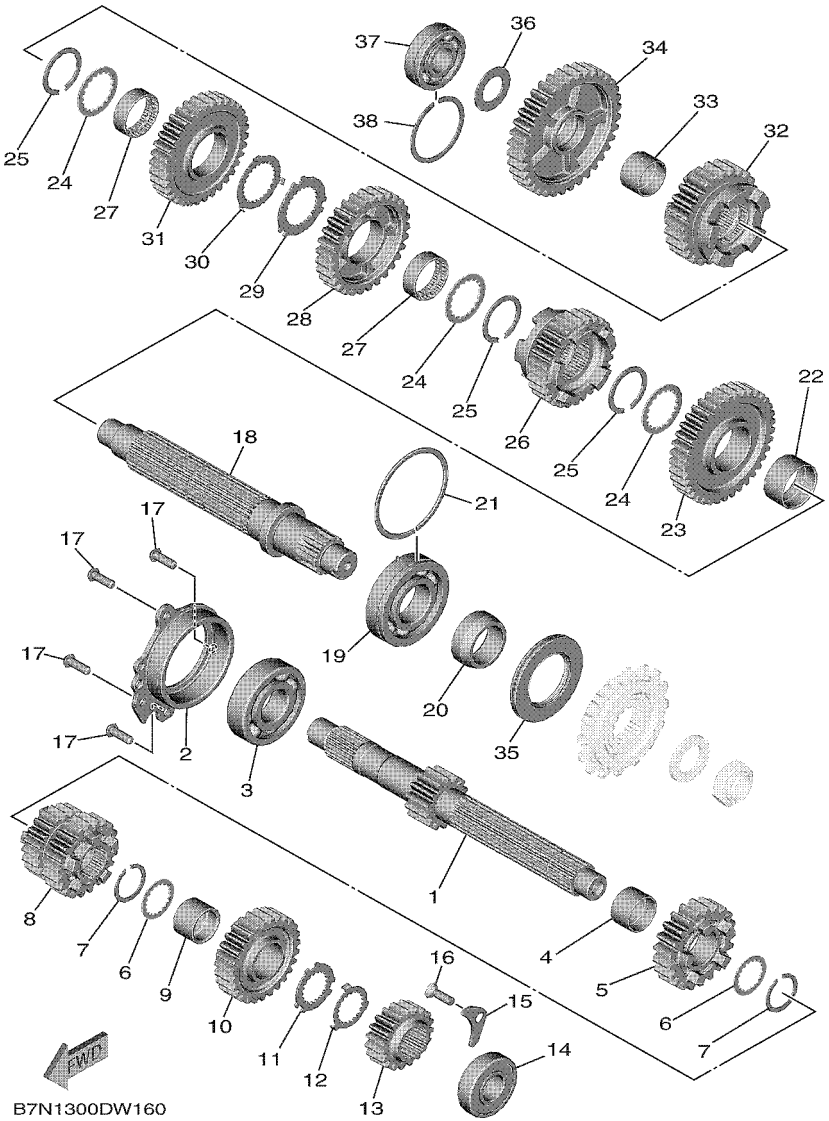

FIG. 17 TRANSMISSION

REF. NO.	PART NO.	DESCRIPTION	BHX2					REMARKS
28	B7N–17241–01	GEAR, 4TH WHEEL (29T)	1					
29	90214–29002	WASHER, CLAW	1					
30	90214–28002	WASHER, CLAW	1					
31	B7N–17231–01	GEAR, 3RD WHEEL (34T)	1					
32	B7N–17251–01	GEAR, 5TH WHEEL (25T)	1					
33	90387–25040	COLLAR	1					
34	B7N–17211–01	GEAR, 1ST WHEEL (36T)	1					
35	93102–40030	OIL SEAL	1					
36	90201–20008	WASHER, PLATE	1					
37	93306–20486	BEARING	1					
38	B7N–17414–00	CLIP	1					

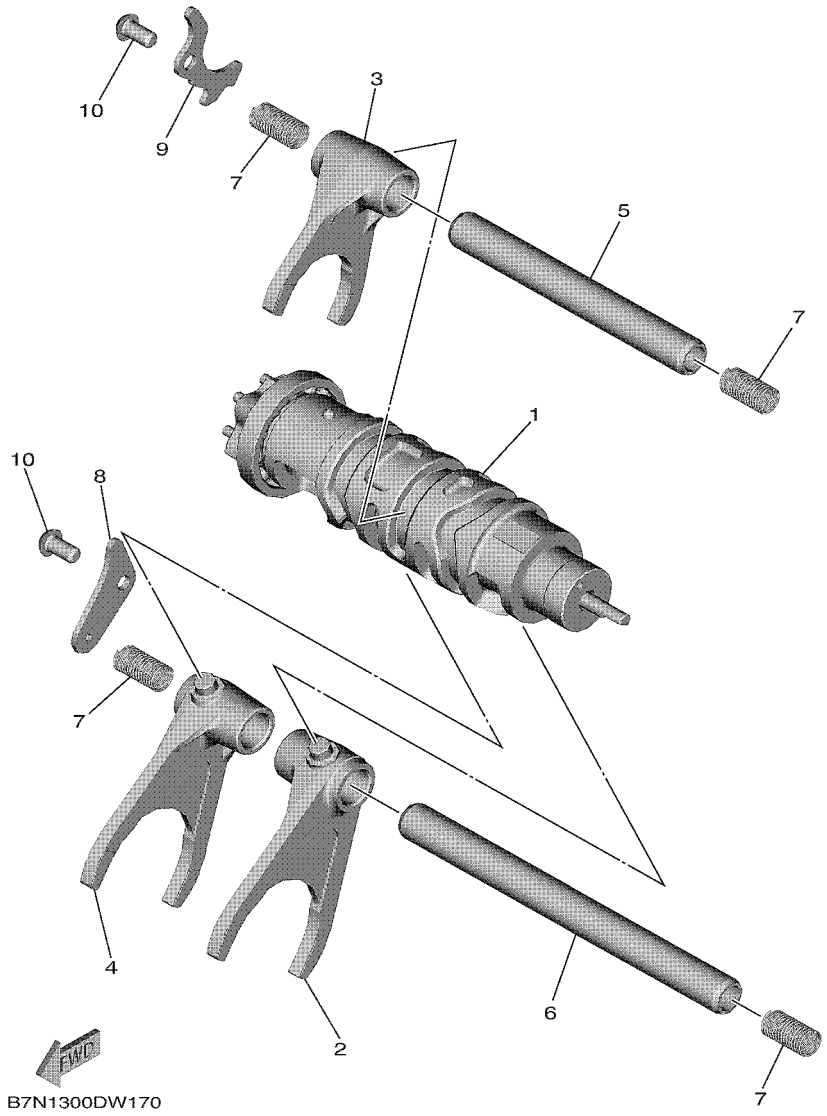

FIG. 18 SHIFT CAM & FORK

REF. NO.	PART NO.	DESCRIPTION	BHX2					REMARKS
1	B7N–18540–01	SHIFT CAM ASSY	1					
2	1RC–18511–00	FORK, SHIFT 1	1					
3	1RC–18512–00	FORK, SHIFT 2	1					
4	1RC–18513–00	FORK, SHIFT 3	1					
5	B7N–18531–00	BAR, SHIFT FORK GUIDE 1	1					
6	B7N–18535–00	BAR, SHIFT FORK GUIDE 2	1					
7	90501–080A2	SPRING, COMPRESSION	4					
8	B7N–18536–00	STOPPER, SHIFT BAR	1					
9	B7N–18562–00	PLATE, STOPPER 2	1					
10	90149–06158	SCREW	2					

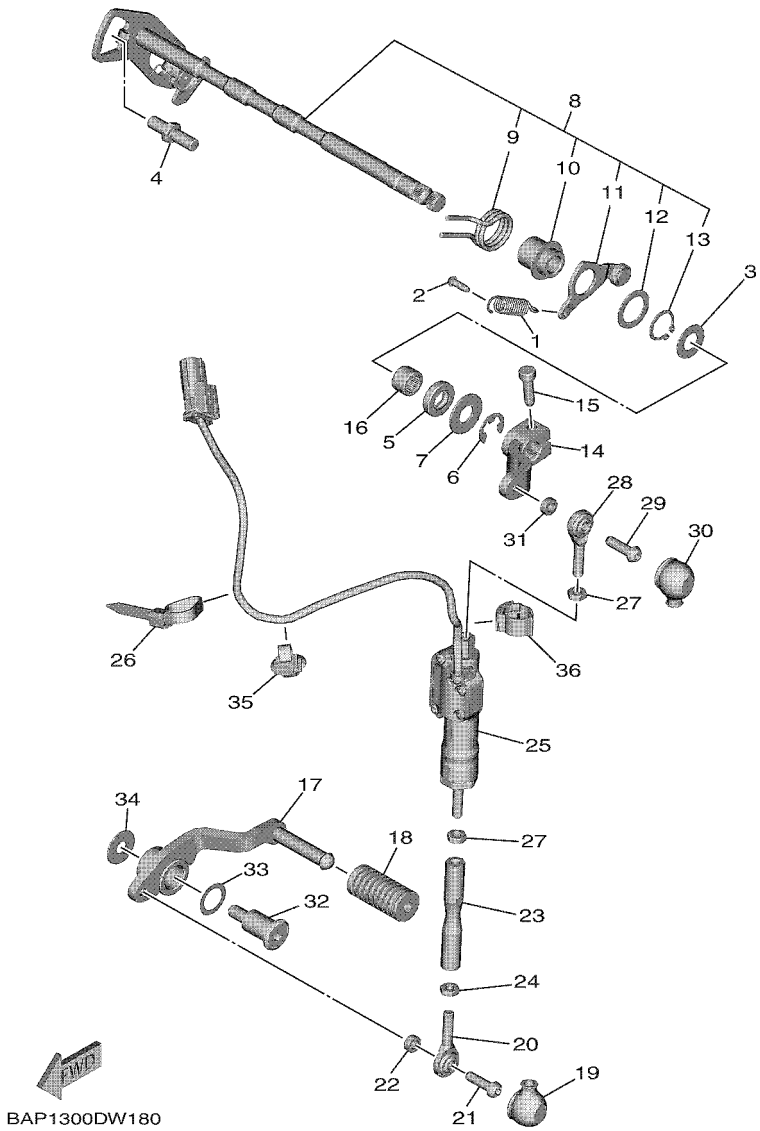

FIG. 19 SHIFT SHAFT

REF. NO.	PART NO.	DESCRIPTION	BHX2					REMARKS
1	B7N–18143–00	SPRING	1					
2	132–16346–00	HOOK, SPRING	1					
3	90201–127E1	WASHER, PLATE	1					
4	1D7–18127–00	STOPPER, SCREW	1					
5	93102–12106	OIL SEAL (SD 12-22-5 HS)	1					
6	99002–10600	CIRCLIP	1					
7	90201–12575	WASHER, PLATE	1					
8	B7N–18101–00	SHIFT SHAFT ASSY	1					
9	90508–32141	.SPRING, TORSION	1					
10	B7N–18175–00	.SPACER	1					
11	B7N–18140–00	.STOPPER LEVER ASSY	1					
12	90201–177G4	.WASHER, PLATE	1					
13	99009–17400	.CIRCLIP	1					
14	B7N–18112–00	ARM, SHIFT	1					
15	91312–06020	BOLT, HEXAGON SOCKET HEAD	1					
16	93317–11295	BEARING	1					
17	B7N–18111–00	PEDAL, SHIFT	1					
18	5EB–18113–00	COVER, SHIFT PEDAL	1					
19	4XV–18154–00	COVER, DUST	1					
20	5LV–18117–00	JOINT, ROD 2	1					
21	90111–06098	BOLT, HEXAGON SOCKET BUTTON	1					
22	90387–06322	COLLAR	1					
23	B7N–18115–00	ROD, SHIFT	1					
24	90170–06228	NUT (COUNTER CLOCKWISE)	1					
25	B7N–82480–10	SHIFT SENSOR ASSY.	1					
26	90464–13077	CLAMP	1					(95.0X7.0)
27	95304–06700	NUT	2					

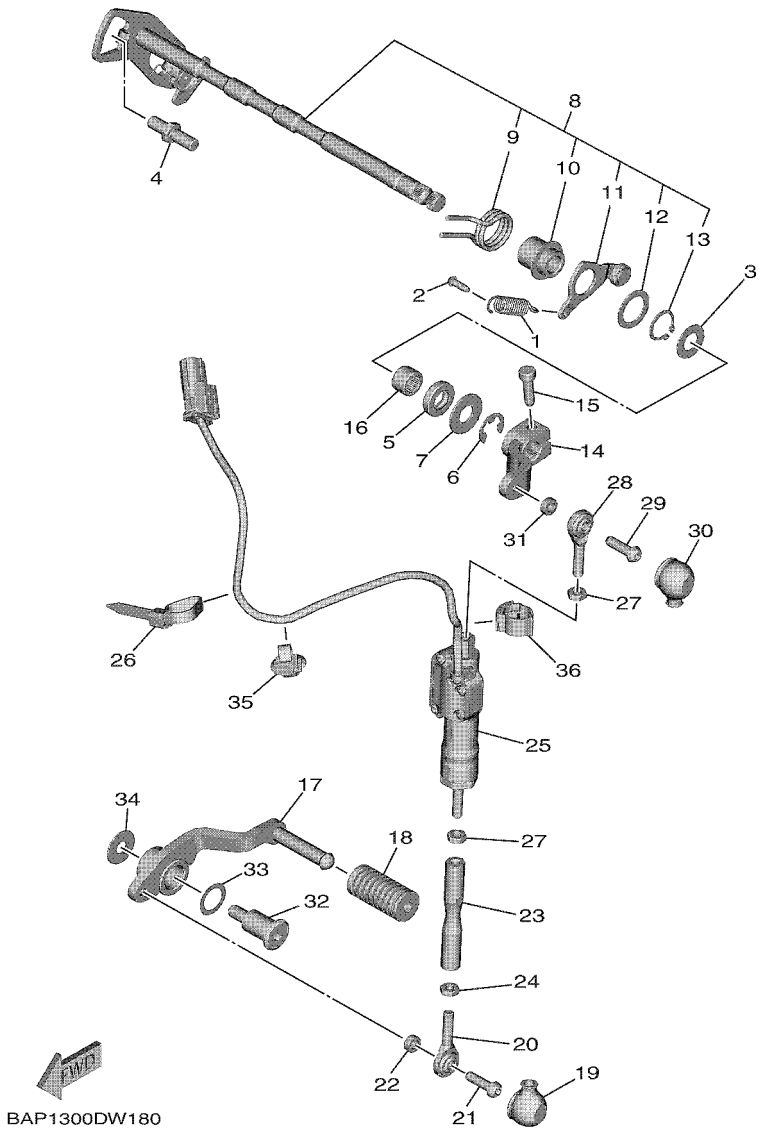

FIG. 19 SHIFT SHAFT

REF. NO.	PART NO.	DESCRIPTION	BHX2					REMARKS
28	5LV–18116–00	JOINT, ROD 1	1					
29	92012–06020	BOLT, BUTTON HEAD	1					
30	4XV–18154–00	COVER, DUST	1					
31	90387–06322	COLLAR	1					
32	4C8–27434–00	BOLT	1					
33	90206–14086	WASHER, WAVE	1					
34	90201–08103	WASHER, PLATE	1					
35	90464–25009	CLAMP	1					
36	90464–14010	CLAMP	1					

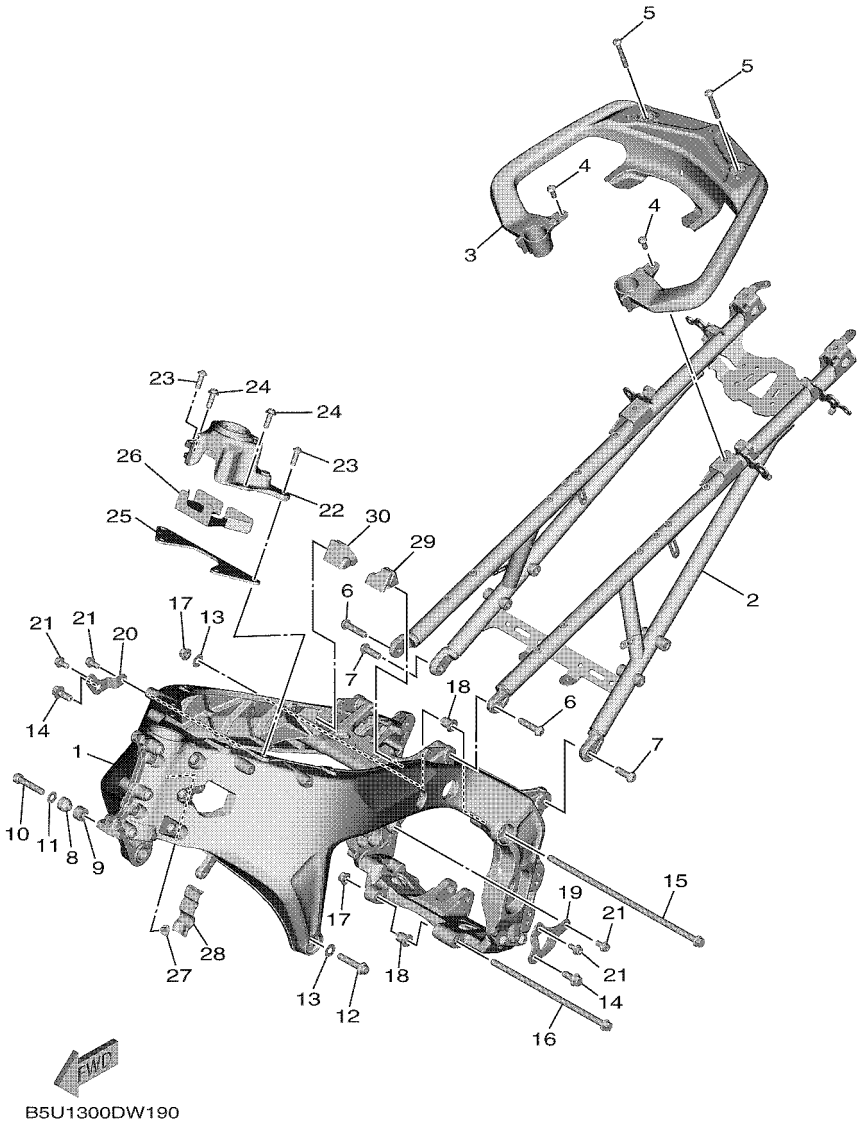

FIG. 20 FRAME

REF. NO.	PART NO.	DESCRIPTION	BHX2					REMARKS
1	B5U–2111B–09	FRAME SUB COMP.	1					MBL2
2	B5U–21190–09	REAR FRAME COMP.	1					MBL2
3	B5U–24773–09	HANDLE, SEAT	1					
4	90159–08005	SCREW, WITH WASHER	2					
5	90159–08006	SCREW, WITH WASHER	2					
6	90149–10076	SCREW	2					
7	90149–10074	SCREW	2					
8	2C0–21414–00	BOSS, ENGINE MOUNT	1					
9	5VY–21424–00	BOSS, ENGINE MOUNT	1					
10	90110–10058	BOLT, HEXAGON SOCKET HEAD	1					
11	90201–10083	WASHER, PLATE	1					
12	90110–10059	BOLT, HEXAGON SOCKET HEAD	1					
13	90201–10084	WASHER, PLATE	2					
14	95D37–10025	BOLT, FLANGE DEEP RECESS	2					
15	90105–10487	BOLT, FLANGE	1					
16	90105–10437	BOLT, FLANGE	1					
17	90179–10247	NUT	2					
18	4C8–21495–00	BOLT, ENGINE ADJUSTING	2					
19	B5U–21315–00	STAY, ENGINE 1	1					
20	B5U–21316–00	STAY, ENGINE 2	1					
21	90109–085E2	BOLT	4					
22	B7N–2137F–00	STAY 1	1					
23	90109–08247	BOLT	2					
24	90110–08231	BOLT, HEXAGON SOCKET HEAD	2					
25	B5U–2137G–00	STAY 2	1					
26	B7N–23892–00	SHIELD, HEAT	1					
27	5VX–21289–00	PLUG, BLIND	1					

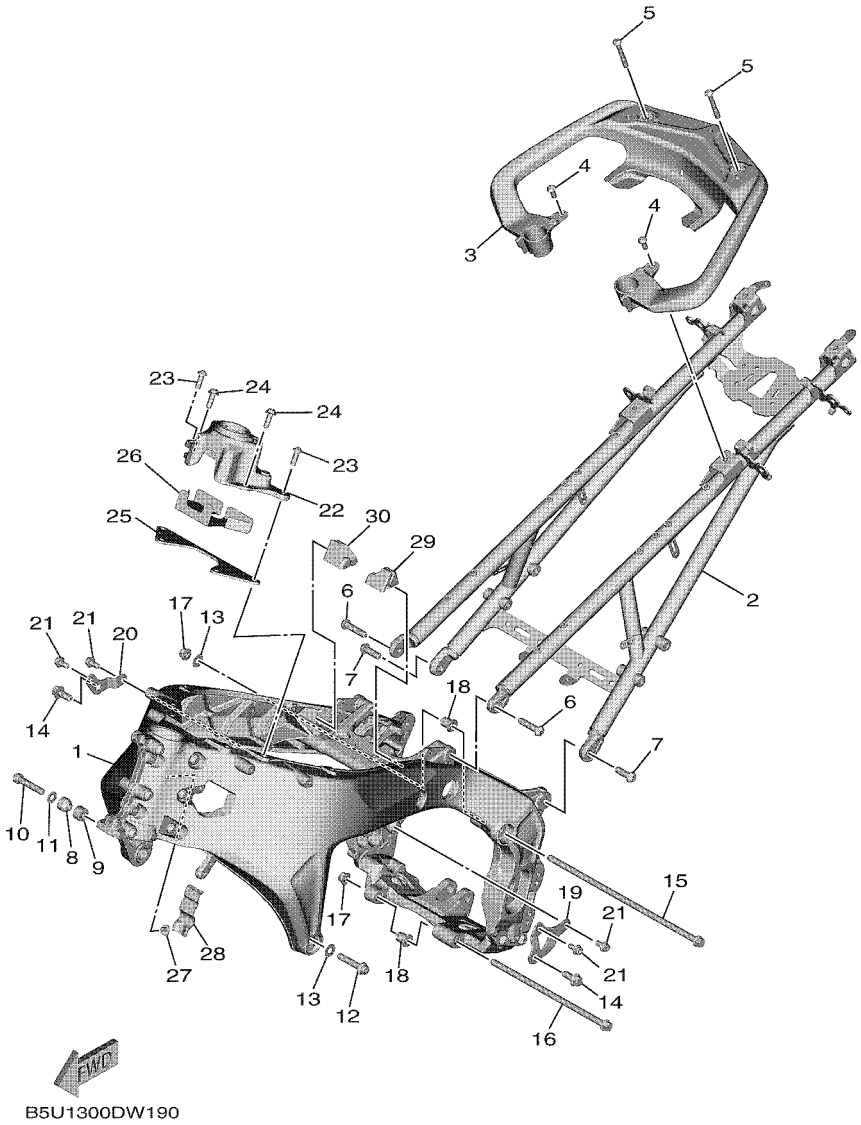

FIG. 20 FRAME

REF. NO.	PART NO.	DESCRIPTION	BHX2					REMARKS
28	34D–82176–00	DAMPER	1					
29	B7N–2117F–00	COVER	1					
30	B7N–2117M–00	COVER 2	1					

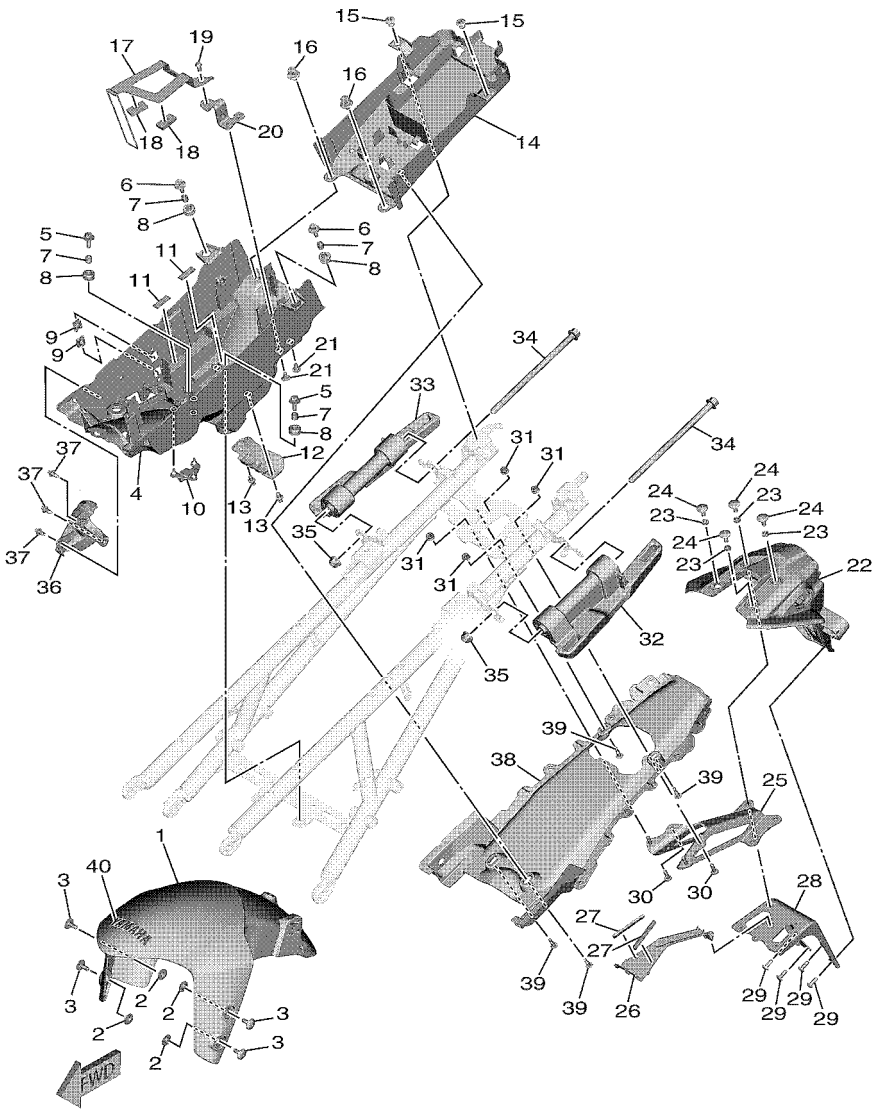

BAP1300DW200

FIG. 21 FENDER

REF. NO.	PART NO.	DESCRIPTION	BHX2					REMARKS
1	B7N–21511–00–33	FENDER, FRONT	1					UR YB FOR BWP1
	B7N–21511–00–P7	FENDER, FRONT	1					UR MBL2 FOR SMX
2	90387–07717	COLLAR	4					
3	90111–06191	BOLT, HEXAGON SOCKET BUTTON	4					
4	B7N–8212B–01	BOX, BATTERY 1	1					
5	90119–06313	BOLT, WITH WASHER	2					
6	90119–06138	BOLT, WITH WASHER	2					
7	90387–060A7	COLLAR	4					
8	90480–14035	GROMMET	4					
9	90183–06069	NUT, SPRING	2					
10	B7N–2135F–00	COVER	1					
11	B7N–21649–00	DAMPER	2					
12	B7N–2160F–00	LID	1					
13	90269–06018	RIVET	2					
14	B5U–2160E–01	BOX	1					
15	90269–07007	RIVET	2					
16	90269–07076	RIVET	2					
17	B7N–82137–00	BAND, BATTERY	1					
18	90520–06009	DAMPER, PLATE	2					
19	92012–06012	BOLT, BUTTON HEAD	1					
20	B7N–21688–00	BRACKET, REAR STAY	1					
21	90111–05049	BOLT, HEXAGON SOCKET BUTTON	2					
22	B7N–21629–00	GUARD, MUD	1					
23	90387–06372	COLLAR	4					
24	90111–06190	BOLT, HEXAGON SOCKET BUTTON	4					
25	B5U–2164F–00	STAY 1	1					
26	2PP–2163E–01	COVER, REAR FENDER 2	1					

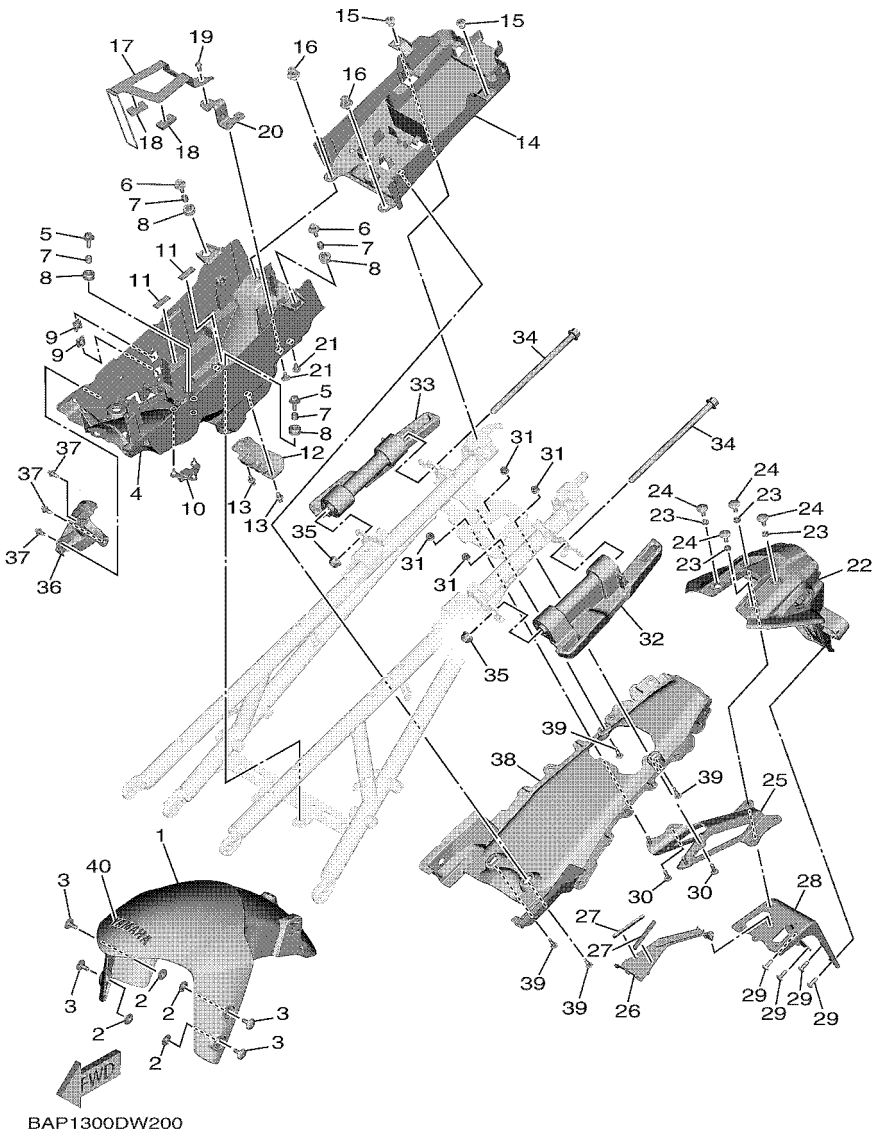

FIG. 21 FENDER

REF. NO.	PART NO.	DESCRIPTION	BHX2					REMARKS
27	90520–04020	DAMPER, PLATE	2					
28	B7N–21682–00	STAY, PLATE	1					
29	90160–05012	SCREW, ROUND TAPPING	4					
30	90111–06046	BOLT, HEXAGON SOCKET BUTTON	2					
31	95602–06200	NUT, SELF-LOCKING	4					
32	BAP–21880–00	STAY ASSY. ,1	1					
33	BAP–21890–00	STAY ASSY. ,2	1					
34	90105–10493	BOLT, FLANGE	2					
35	95607–10200	NUT, U FLANGE	2					
36	B7N–2163A–00	COVER, REAR FENDER 1	1					
37	90269–06001	RIVET	3					
38	B5U–21651–01	COVER, REAR FENDER	1					
39	90269–06001	RIVET	4					
40	99247–00080	EMBLEM, YAMAHA	1					UR FOR BWP1
	99244–00080	EMBLEM, YAMAHA	1					UR FOR SMX

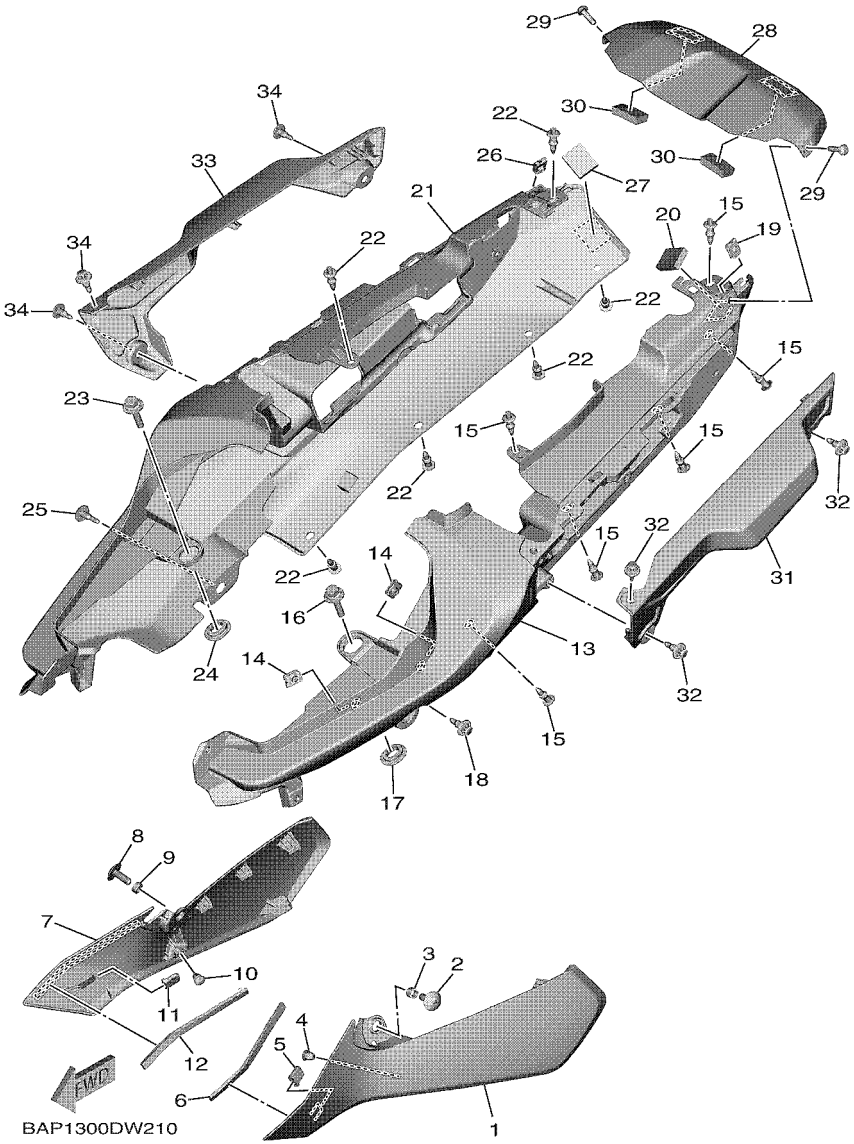

FIG. 22 SIDE COVER

REF. NO.	PART NO.	DESCRIPTION	BHX2					REMARKS
1	B5U–21711–00–P4	COVER, SIDE 1	1					UR FOR BWP1
	B5U–21711–00–P3	COVER, SIDE 1	1					UR FOR SMX
2	90110–06090	BOLT, HEXAGON SOCKET HEAD	1					
3	90387–06361	COLLAR	1					
4	90338–06018	PLUG	1					
5	5PW–2411J–01	DAMPER, SIDE COVER	1					
6	90520–03019	DAMPER, PLATE	1					
7	B5U–21721–00–P4	COVER, SIDE 2	1					UR FOR BWP1
	B5U–21721–00–P3	COVER, SIDE 2	1					UR FOR SMX
8	90110–06090	BOLT, HEXAGON SOCKET HEAD	1					
9	90387–06361	COLLAR	1					
10	90338–06018	PLUG	1					
11	5PW–2411J–01	DAMPER, SIDE COVER	1					
12	90520–03019	DAMPER, PLATE	1					
13	B5U–21731–00	COVER, SIDE 3	1					
14	90183–05076	NUT, SPRING	2					
15	90269–06001	RIVET	6					
16	90159–06051	SCREW, WITH WASHER	1					
17	17D–21749–00	COLLAR	1					
18	90269–06083	RIVET	1					
19	90183–05076	NUT, SPRING	1					
20	90520–06010	DAMPER, PLATE	1					
21	B5U–21741–00	COVER, SIDE 4	1					
22	90269–06001	RIVET	6					
23	90159–06051	SCREW, WITH WASHER	1					
24	17D–21749–00	COLLAR	1					
25	90269–06083	RIVET	1					

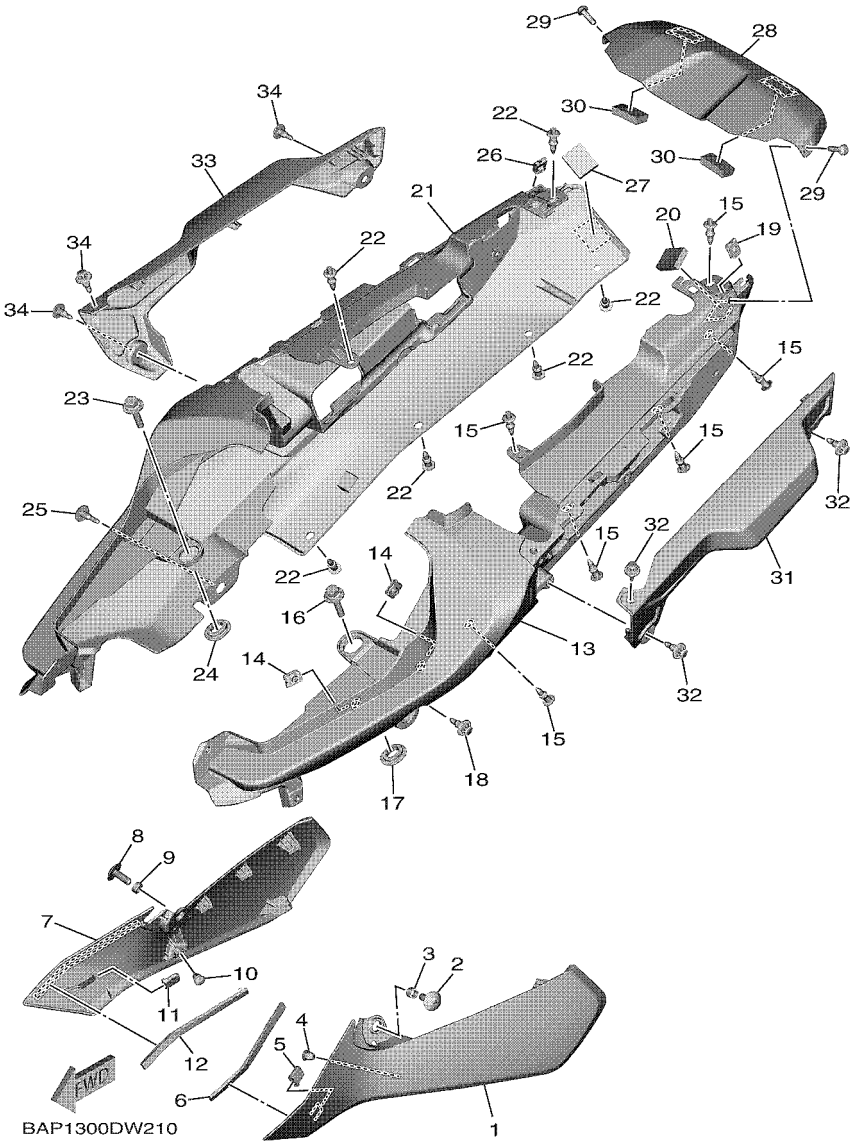

FIG. 22 SIDE COVER

REF. NO.	PART NO.	DESCRIPTION	BHX2					REMARKS
26	90183–05076	NUT, SPRING	1					
27	90520–06010	DAMPER, PLATE	1					
28	B5U–2171A–00	COVER, TOP	1					
29	90111–05041	BOLT, HEXAGON SOCKET BUTTON	2					
30	90520–07003	DAMPER, PLATE	2					
31	BAP–2171E–00	COVER, SIDE 5	1					
32	90269–06081	RIVET	3					
33	BAP–2171X–00	COVER, SIDE 6	1					
34	90269–06081	RIVET	3					

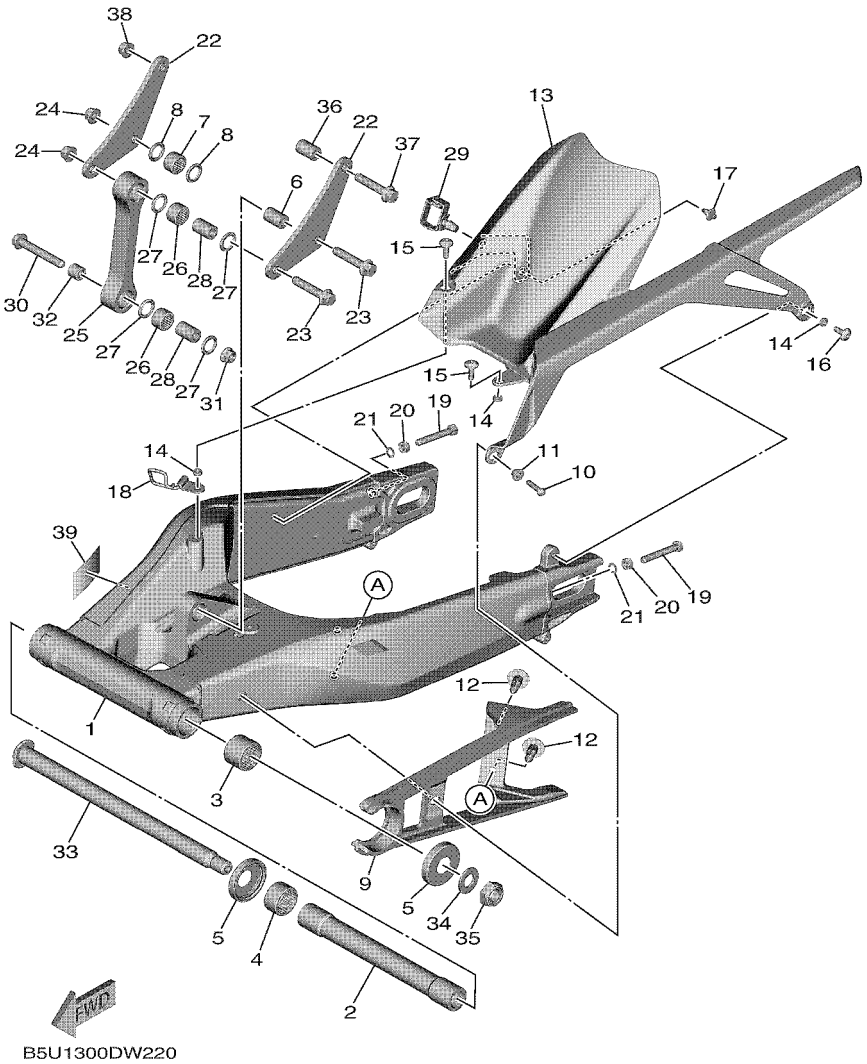

FIG. 23 REAR ARM

REF. NO.	PART NO.	DESCRIPTION	BHX2					REMARKS
1	B5U–22110–00	REAR ARM COMP.	1					MBL2
2	90387–22037	COLLAR	1					
3	93317–330A0	BEARING	1					
4	93317–330A1	BEARING	1					
5	5VY–22128–00	COVER, THRUST 1	2					
6	90387–1012A	COLLAR	1					
7	93315–31758	BEARING	1					
8	93109–17071	OIL SEAL	2					
9	B5U–22151–00	SEAL, GUARD	1					
10	92012–06025	BOLT, BUTTON HEAD	1					
11	90387–062X0	COLLAR	1					
12	90269–07007	RIVET	2					
13	B5U–21650–01	REAR FENDER COMP.	1					
14	90387–06372	COLLAR	3					
15	90149–06104	SCREW	2					
16	90111–06151	BOLT, HEXAGON SOCKET BUTTON	1					
17	90269–07007	RIVET	1					
18	B5U–22538–00	STAY	1					
19	90101–08013	BOLT	2					
20	95302–08600	NUT, HEXAGON	2					
21	90201–08052	WASHER, PLATE	2					
22	B5U–2217A–00	ARM, RELAY	2					
23	90105–10030	BOLT, FLANGE	2					
24	95607–10200	NUT, U FLANGE	2					
25	B7N–2217M–00	ARM 1	1					
26	93315–31758	BEARING	2					
27	93109–17071	OIL SEAL	4					

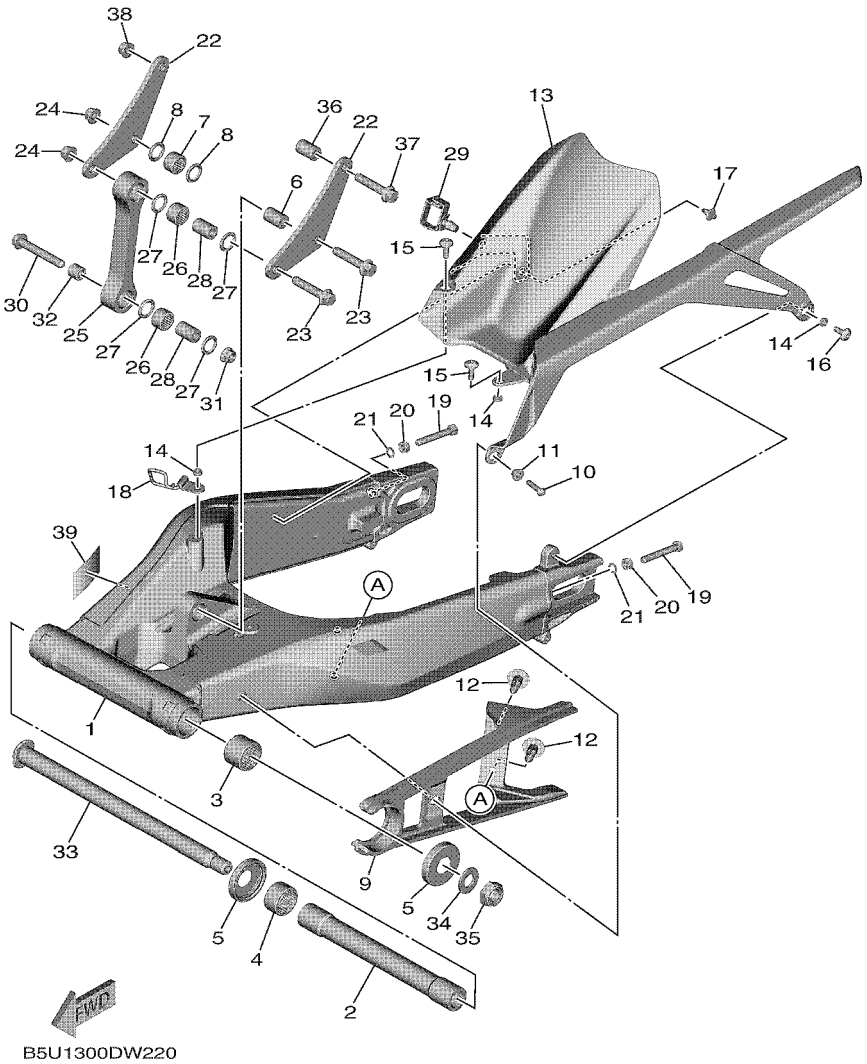

FIG. 23 REAR ARM

REF. NO.	PART NO.	DESCRIPTION	BHX2					REMARKS
28	90387–1012A	COLLAR	2					
29	90464–20023	CLAMP	1					
30	90105–10211	BOLT, FLANGE	1					
31	95602–10200	NUT, SELF-LOCKING	1					
32	90387–10043	COLLAR	1					
33	B7N–22141–00	SHAFT, PIVOT	1					
34	90201–18013	WASHER, PLATE	1					
35	90185–18009	NUT, SELF-LOCKING	1					
36	90387–10125	COLLAR	1					
37	90105–10030	BOLT, FLANGE	1					
38	95607–10200	NUT, U FLANGE	1					
39	BM6–21668–00	LABEL, TIRE	1					

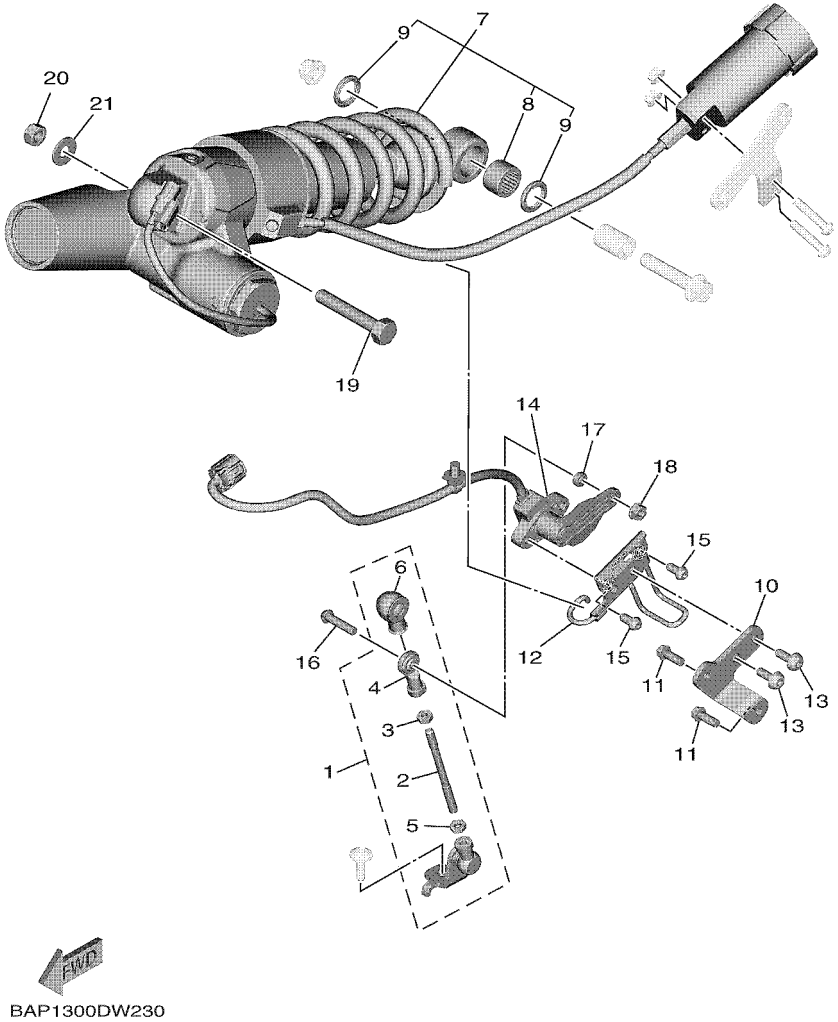

FIG. 24 REAR SUSPENSION

REF. NO.	PART NO.	DESCRIPTION	BHX2					REMARKS
1	BAP–22130–00	ARM SUB COMP. 1	1					
2	BAP–18115–00	.ROD, SHIFT	1					
3	95317–06700	.NUT	1					
4	5VX–18116–00	.JOINT, ROD 1	1					
5	90170–06022	.NUT	1					
6	5VX–18154–00	.COVER, DUST	1					
7	BAP–22210–02	SHOCK ABSORBER ASSY, REAR	1					
8	93315–31758	.BEARING	1					
9	93109–17071	.OIL SEAL	2					
10	BAM–2216C–00	BRACKET 2	1					
11	95027–06016	BOLT, FLANGE	2					
12	BAP–2216B–00	BRKT., 1	1					
13	90111–06029	BOLT, HEXAGON SOCKET BUTTON	2					
14	BAP–85984–00	SENSOR,ANGULAR POSITION	1					
15	90111–06102	BOLT, HEXAGON SOCKET BUTTON	2					
16	92017–06025	BOLT, BUTTON HEAD	1					
17	90387–06322	COLLAR	1					
18	95707–06500	NUT, FLANGE	1					
19	90101–10042	BOLT	1					
20	95602–10100	NUT, U	1					
21	90201–101J1	WASHER, PLATE	1					

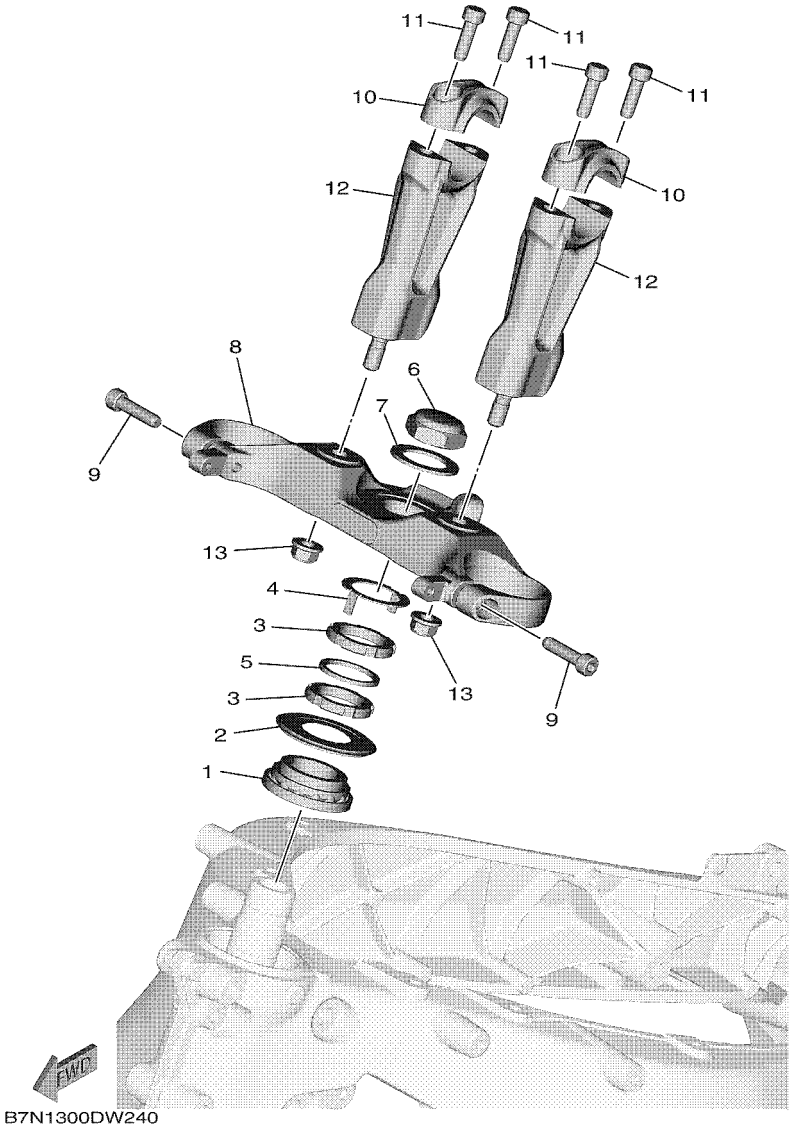

B7N1300DW240

FIG. 25 STEERING

REF. NO.	PART NO.	DESCRIPTION	BHX2					REMARKS
1	93399–99932	BEARING	1					
2	4XV–23415–01	COVER, BALL RACE 1	1					
3	90179–30006	NUT	2					
4	4XV–23418–00	WASHER, SPECIAL	1					
5	90202–30235	WASHER, PLATE	1					
6	90176–28083	NUT, CAP	1					
7	90201–281U8	WASHER, PLATE	1					
8	B7N–23435–00	CROWN, HANDLE	1					
9	91314–08030	BOLT, HEXAGON SOCKET HEAD	2					
10	B7N–23441–00	HOLDER, HANDLE UPPER	2					
11	91314–08025	BOLT, HEXAGON SOCKET HEAD	4					
12	B7N–23442–00	HOLDER, HANDLE LOWER	2					
13	95602–10200	NUT, SELF-LOCKING	2					

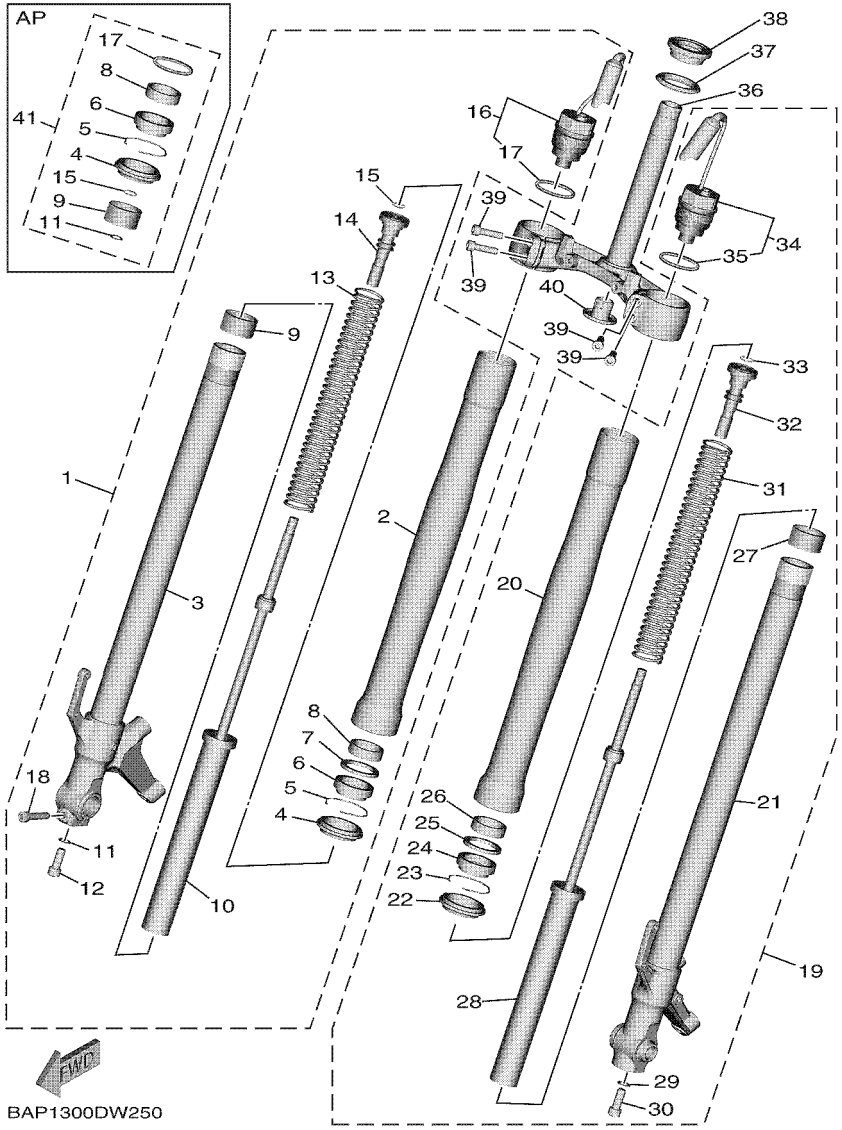

FIG. 26 FRONT FORK

REF. NO.	PART NO.	DESCRIPTION	BHX2					REMARKS
1	BAP–23103–00	DAMPER ASSY. (R)	1					
2	B5U–23126–10	.TUBE, OUTER (L.H)	1					
3	BAP–23120–00	.INNER TUBE COMP.2	1					
4	4EB–23144–00	.SEAL, DUST	1					
5	26H–23156–00	.RING, SNAP	1					
6	4EB–23145–01	.OIL SEAL	1					
7	36Y–23146–10	.WASHER, OIL SEAL	1					
8	1RC–23125–00	.METAL, SLIDE 1	1					
9	4FM–23171–40	.METAL, SLIDE	1					
10	BAP–23170–10	.CYLINDER COMP., FRONT FORK	1					
11	509–23158–L0	.GASKET	1					(KYB)
12	278–23181–50	.BOLT, HEXAGON SOCKET HEAD	1					
13	BAP–23141–00	.SPRING, FRONT FORK	1					
14	BAP–23117–00	.GUIDE, SPRING	1					
15	BAP–23188–00	.O-RING	1					
16	BAP–23111–00	.BOLT, CAP	1					
17	39P–23147–00	..O-RING	1					
18	91314–08040	.BOLT, HEXAGON SOCKET HEAD	1					
19	BAP–23102–00	DAMPER ASSY. (L)	1					
20	B5U–23126–10	.TUBE, OUTER (L.H)	1					
21	BAP–23110–00	.INNER TUBE COMP.1	1					
22	4EB–23144–00	.SEAL, DUST	1					
23	26H–23156–00	.RING, SNAP	1					
24	4EB–23145–01	.OIL SEAL	1					
25	36Y–23146–10	.WASHER, OIL SEAL	1					
26	1RC–23125–00	.METAL, SLIDE 1	1					
27	4FM–23171–40	.METAL, SLIDE	1					

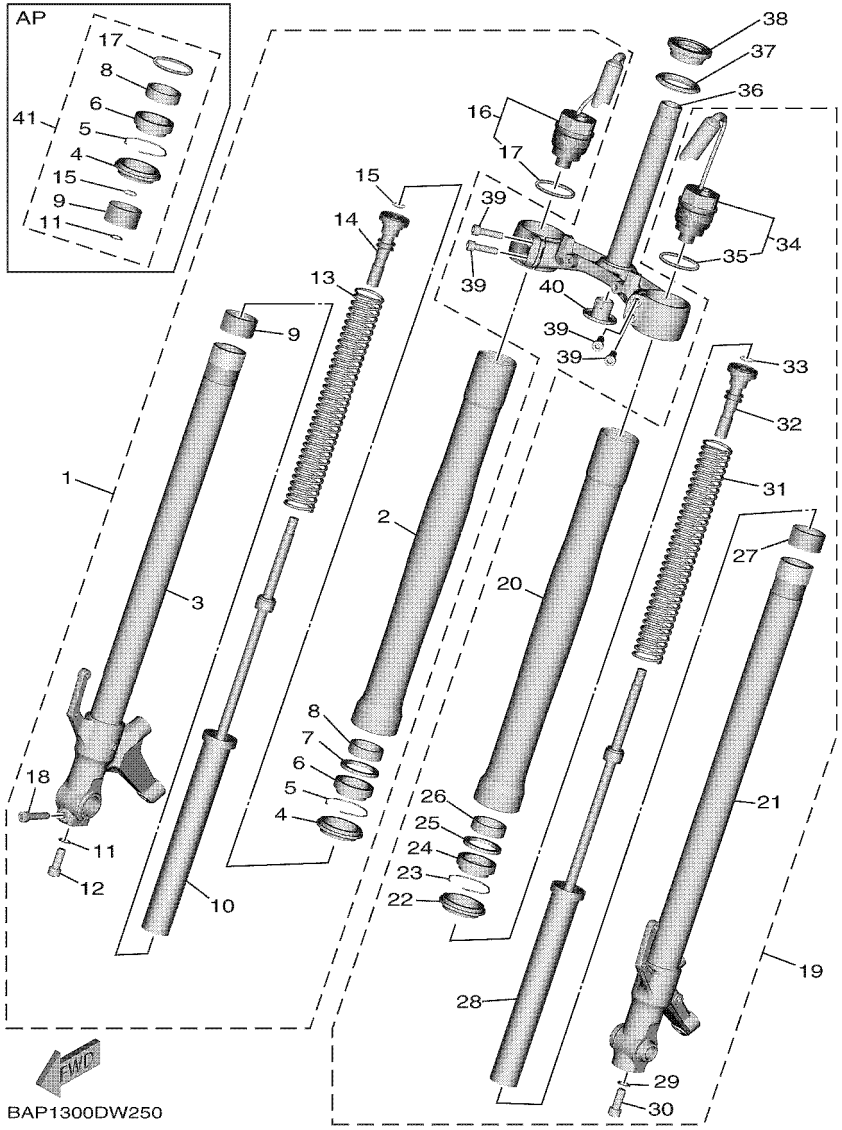

FIG. 26 FRONT FORK

REF. NO.	PART NO.	DESCRIPTION	BHX2					REMARKS
28	BAP–23170–00	.CYLINDER COMP., FRONT FORK	1					
29	509–23158–L0	.GASKET	1					(KYB)
30	278–23181–50	.BOLT, HEXAGON SOCKET HEAD	1					
31	BAP–23141–00	.SPRING, FRONT FORK	1					
32	BAP–23117–00	.GUIDE, SPRING	1					
33	BAP–23188–00	.O-RING	1					
34	BAP–23111–00	.BOLT, CAP	1					
35	39P–23147–00	..O-RING	1					
36	B5U–23340–00	UNDER BRACKET COMP.	1					
37	3FV–23462–00	SEAL, STEERING	1					
38	93399–99957	BEARING	1					
39	91314–08030	BOLT, HEXAGON SOCKET HEAD	4					
40	4KM–23123–01	COVER, UNDER 1	1					
41	BAP–W003B–00	FORK SEALS KIT	1					AP

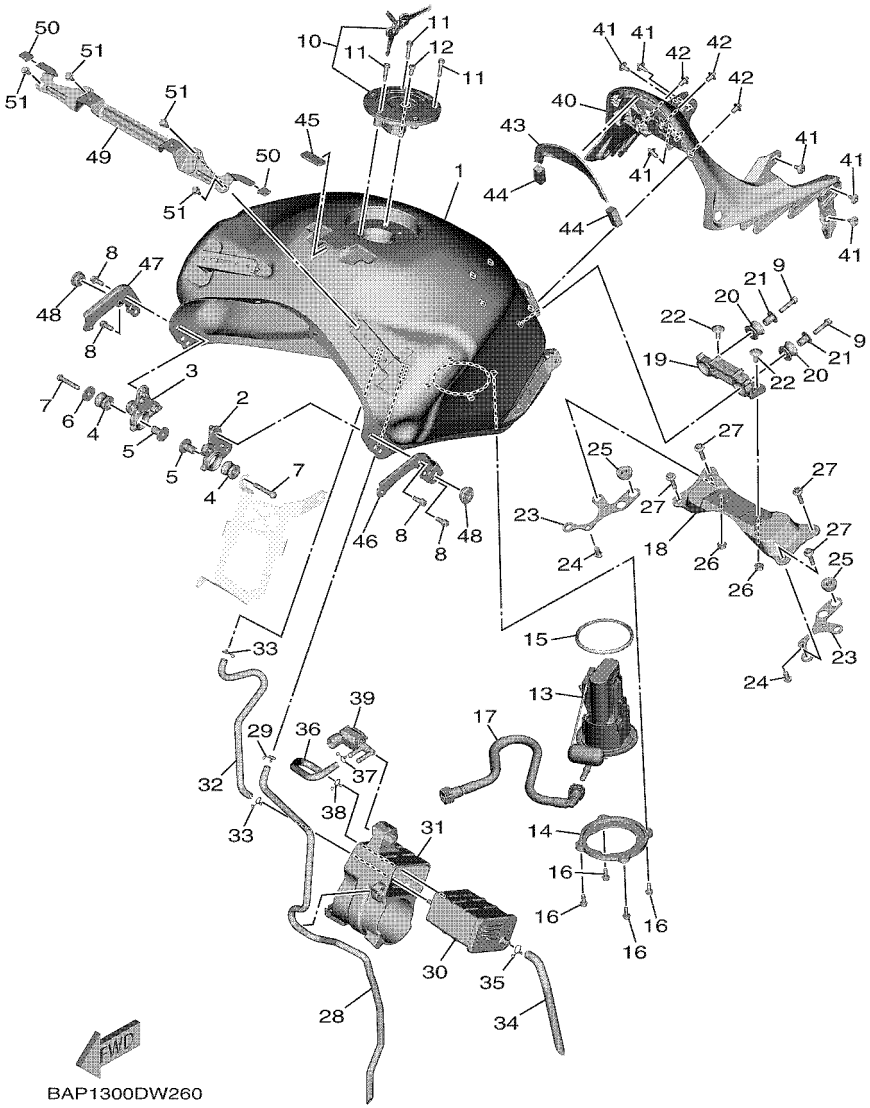

FIG. 27 FUEL TANK

REF. NO.	PART NO.	DESCRIPTION	BHX2					REMARKS
1	B5U–YK241–00–P4	FUEL TANK COMP.	1					UR FOR BWP1
	B5U–YK241–00–P3	FUEL TANK COMP.	1					UR FOR SMX
2	B7N–24191–00	BRACKET, FUEL TANK 1	1					
3	B7N–24192–00	BRACKET, FUEL TANK 2	1					
4	90480–18008	GROMMET	2					
5	90387–06266	COLLAR	2					
6	90201–06072	WASHER, PLATE	1					
7	92012–06035	BOLT, BUTTON HEAD	2					
8	95E37–06014	BOLT, FLANGE DEEP RECESS	4					
9	95E32–06025	BOLT, FLANGE DEEP RECESS	2					
10	39P–24602–10	CAP ASSY	1					
11	90110–05112	BOLT, HEXAGON SOCKET HEAD	3					
12	91312–05010	BOLT, HEXAGON SOCKET HEAD	1					
13	B5U–13907–10	FUEL PUMP COMP.	1					
14	1RC–24491–00	BRACKET, FUEL PUMP	1					
15	1RC–24486–00	O-RING	1					
16	90110–05028	BOLT, HEXAGON SOCKET HEAD	4					
17	B7N–13971–00	PIPE, FUEL 1	1					
18	B5U–2413Y–00	BRACKET, TANK FITTING	1					
19	B7N–2419F–00	BRACKET, CANISTOR	1					
20	3D7–24339–00	GROMMET	2					
21	90387–06136	COLLAR	2					
22	90111–06136	BOLT, HEXAGON SOCKET BUTTON	2					
23	B5U–24662–00	STAY	2					
24	92012–06012	BOLT, BUTTON HEAD	2					
25	90480–13567	GROMMET	2					
26	95702–06500	NUT, FLANGE	2					

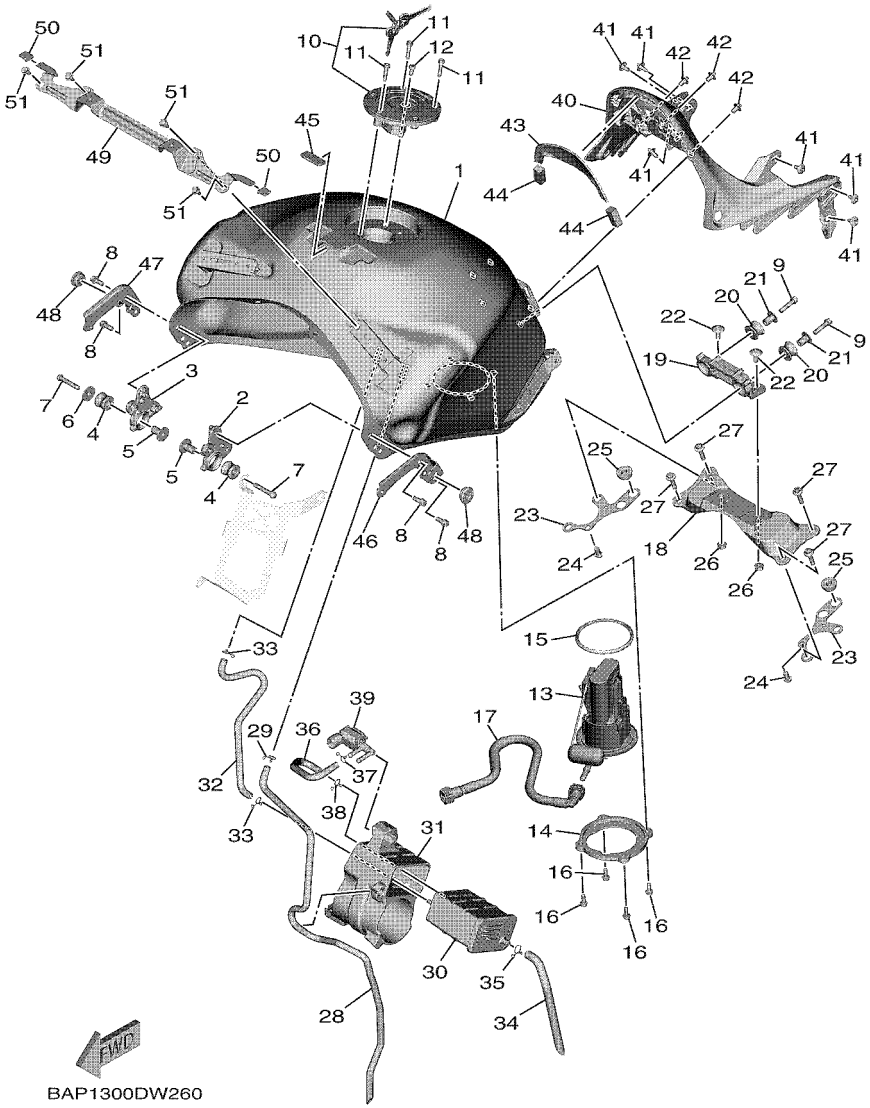

FIG. 27 FUEL TANK

REF. NO.	PART NO.	DESCRIPTION	BHX2					REMARKS
27	90110–06172	BOLT, HEXAGON SOCKET HEAD	4					
28	B7N–24315–00	PIPE 5	1					
29	90467–090A2	CLIP	1					
30	B7N–24170–00	CANISTER ASSY	1					
31	B7N–24183–00	DAMPER, LOCATING 3	1					
32	B7N–24313–00	PIPE 3	1					
33	90467–090A2	CLIP	2					
34	B7N–24316–00	PIPE 6	1					
35	90467–10041	CLIP	1					
36	B7N–24317–00	PIPE 7	1					
37	90467–090A2	CLIP	1					
38	90467–09103	CLIP	1					
39	B7N–86120–00	SOLENOID VALVE ASSY	1					
40	B5U–24141–00	PROTECTOR, FUEL TANK	1					
41	90269–05079	RIVET	6					
42	90269–06019	RIVET	3					
43	B5U–24181–00	DAMPER, LOCATING 1	1					
44	90520–10037	DAMPER, PLATE	2					
45	B5U–2411J–00	DAMPER, SIDE COVER	1					
46	B5U–2411F–00	PLATE, FITTING	1					
47	B5U–2411L–00	HOOK TANK FITTING	1					
48	90480–01558	GROMMET	2					
49	B5U–24216–00	STAY	1					
50	5PW–2411J–01	DAMPER, SIDE COVER	2					
51	90105–05014	BOLT, FLANGE	4					

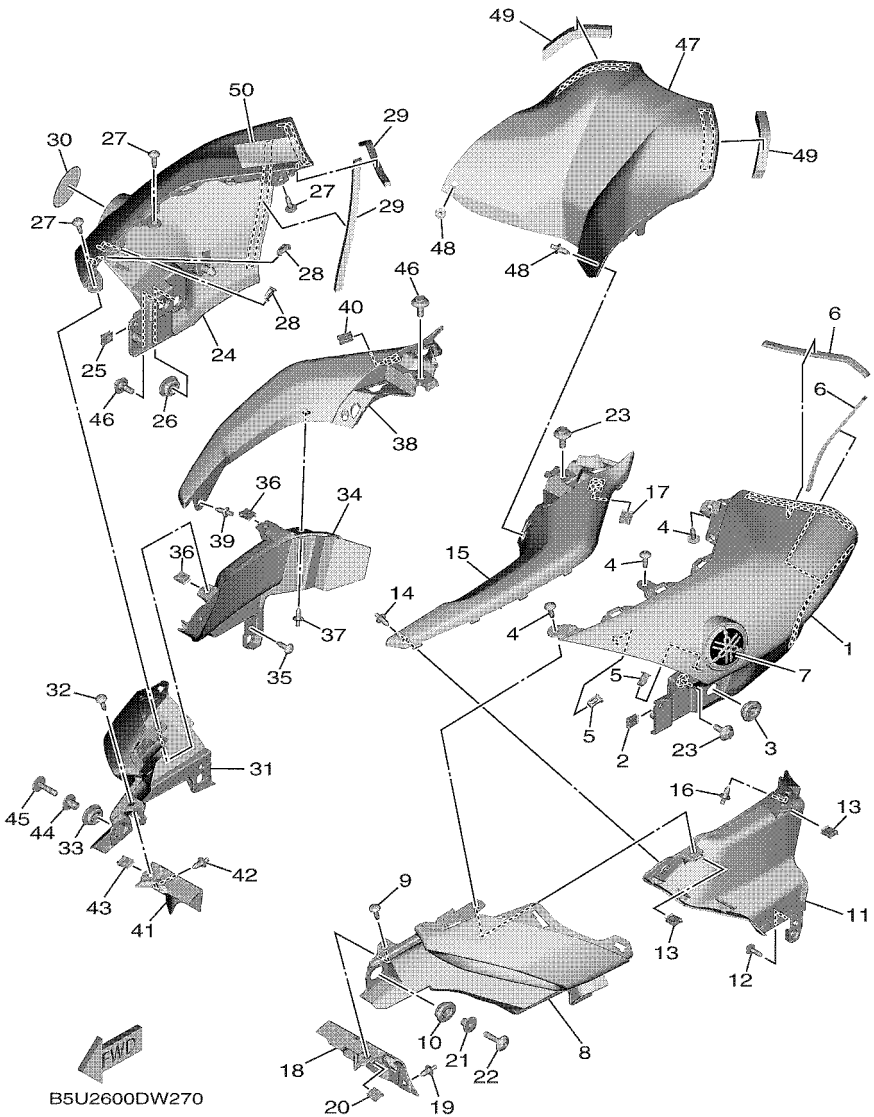

FIG. 28 FUEL TANK 2

REF. NO.	PART NO.	DESCRIPTION	BHX2					REMARKS
1	B5U–24129–00–P4	COVER, SIDE 1	1					UR FOR BWP1
	B5U–24129–00–P3	COVER, SIDE 1	1					UR FOR SMX
2	90183–05042	NUT, SPRING	1					
3	90480–01559	GROMMET	1					
4	90167–05076	SCREW, TAPPING	3					
5	90464–04005	CLAMP	2					
6	90520–04019	DAMPER, PLATE	2					
7	1RC–2413B–01	EMBLEM	1					
8	B5U–2837N–00	GRILL, AIR INTAKE 1	1					
9	90167–05076	SCREW, TAPPING	1					
10	90480–01559	GROMMET	1					
11	B5U–2838N–00	DUCT 1	1					
12	90167–05076	SCREW, TAPPING	1					
13	90183–05042	NUT, SPRING	2					
14	90269–06001	RIVET	1					
15	B5U–28345–00	MOLE 1	1					
16	90269–06001	RIVET	1					
17	90183–05042	NUT, SPRING	1					
18	B5U–2842M–00	COVER 1	1					
19	90269–06001	RIVET	1					
20	90183–05042	NUT, SPRING	1					
21	90387–06205	COLLAR	1					
22	90111–06175	BOLT, HEXAGON SOCKET BUTTON	1					
23	90109–06043	BOLT	2					
24	B5U–24139–00–P4	COVER, SIDE 2	1					UR FOR BWP1
	B5U–24139–00–P3	COVER, SIDE 2	1					UR FOR SMX
25	90183–05042	NUT, SPRING	1					

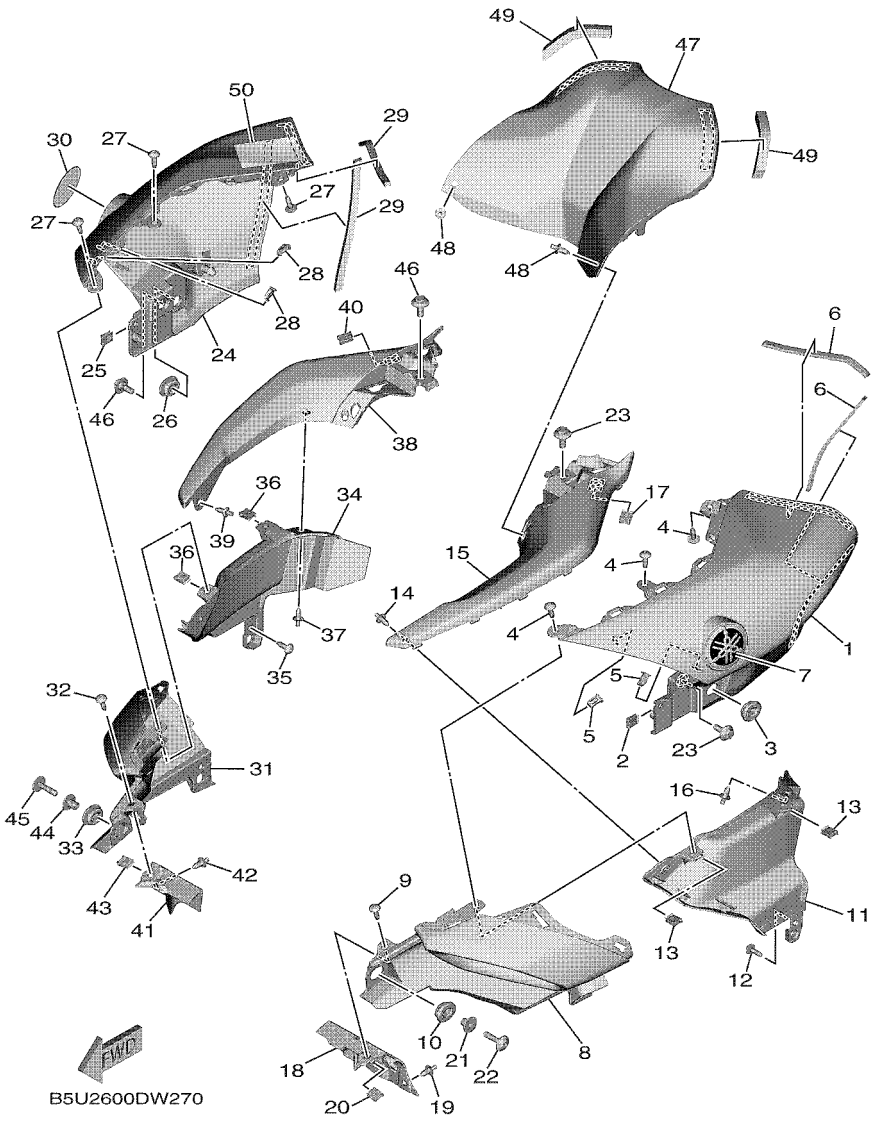

FIG. 28 FUEL TANK 2

REF. NO.	PART NO.	DESCRIPTION	BHX2					REMARKS
26	90480–01559	GROMMET	1					
27	90167–05076	SCREW, TAPPING	3					
28	90464–04005	CLAMP	2					
29	90520–04019	DAMPER, PLATE	2					
30	1RC–2413B–01	EMBLEM	1					
31	B5U–2837R–00	GRILL, AIR INTAKE 2	1					
32	90167–05076	SCREW, TAPPING	1					
33	90480–01559	GROMMET	1					
34	B5U–2838R–00	DUCT 2	1					
35	90167–05076	SCREW, TAPPING	1					
36	90183–05042	NUT, SPRING	2					
37	90269–06001	RIVET	1					
38	B5U–28346–00	MOLE 2	1					
39	90269–06001	RIVET	1					
40	90183–05042	NUT, SPRING	1					
41	B5U–2842N–00	COVER 2	1					
42	90269–06001	RIVET	1					
43	90183–05042	NUT, SPRING	1					
44	90387–06205	COLLAR	1					
45	90111–06175	BOLT, HEXAGON SOCKET BUTTON	1					
46	90109–06043	BOLT	2					
47	B5U–241B1–00	COVER, TANK	1					
48	90269–06001	RIVET	2					
49	90520–10039	DAMPER, PLATE	2					
50	4C8–21568–11	LABEL, WARNING	1					

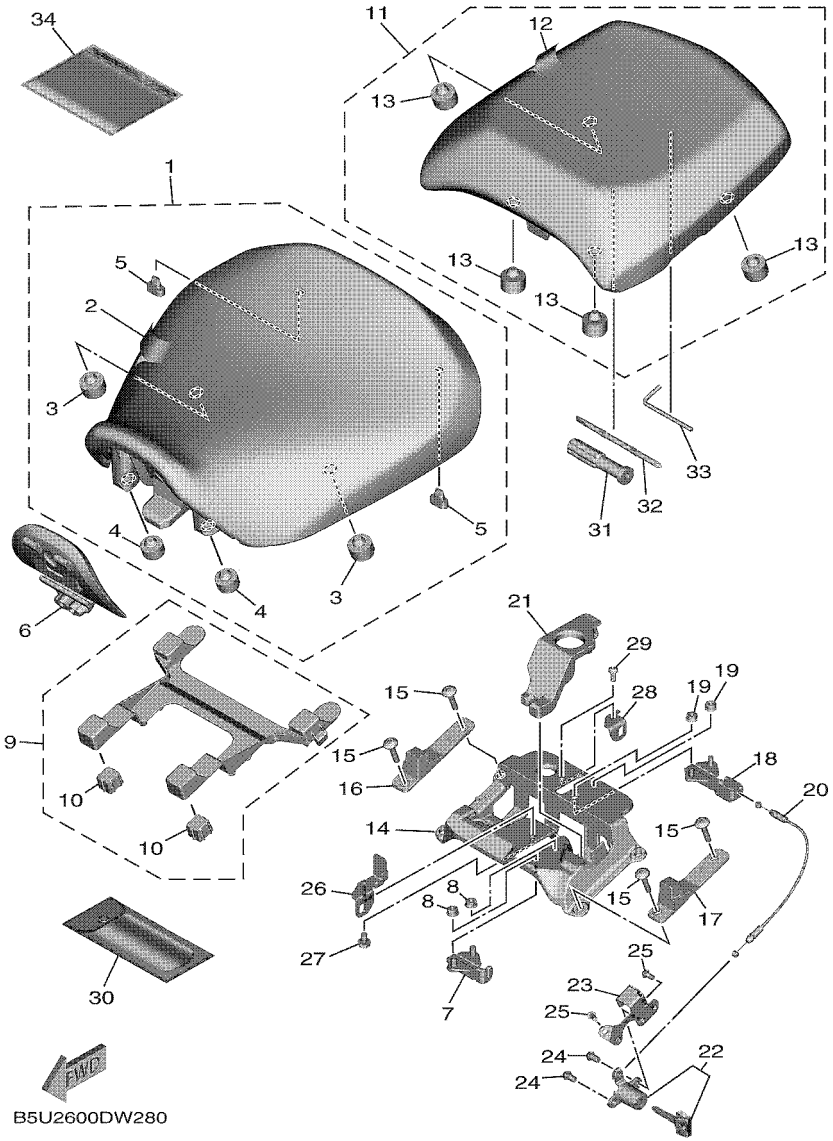

FIG. 29 SEAT

REF. NO.	PART NO.	DESCRIPTION	BHX2					REMARKS
1	BAP–24710–30	SINGLE SEAT ASSY	1					
2	BAP–2470F–30	.SEAT COVER COMP.	1					
3	371–27114–00	.STOPPER, MAIN STAND	2					
4	278–27114–00	.STOPPER, MAIN STAND	2					
5	B5C–24741–00	.PAD, SEAT	2					
6	B5U–24217–00	COVER	1					
7	3P6–24780–00	SEAT LOCK ASSY	1					
8	95702–06500	NUT, FLANGE	2					
9	B5U–24708–00	SEAT BRACKET ASSY	1					
10	2PP–24723–00	.DAMPER, SEAT	2					
11	BAP–24750–30	TANDEM SEAT ASSY	1					
12	BAP–2470H–30	.SEAT COVER COMP. ,2	1					
13	4GL–27114–00	.STOPPER, MAIN STAND	4					
14	2PP–2478X–01	BRACKET, SEAT LOCK	1					
15	90111–06053	BOLT, HEXAGON SOCKET BUTTON	4					
16	B5C–24797–00	BRACKET, SEAT BACK	1					
17	B5C–2479L–00	BRACKET, SEAT BACK 2	1					
18	B5U–24780–00	SEAT LOCK ASSY	1					
19	95702–06500	NUT, FLANGE	2					
20	B5U–2479D–00	WIRE, SEAT LOCK 2	1					
21	B5U–2471P–00	PLATE, COVER	1					
22	2TV–W2470–00	ROTOR SET	1					
23	B5U–2479K–00	PLATE, LOCK	1					
24	92012–06010	BOLT, BUTTON HEAD	2					
25	92012–05010	BOLT, BUTTON HEAD	2					
26	2PP–2475H–00	BRACKET, SEAT LEVER 1	1					
27	90105–06057	BOLT, FLANGE	1					

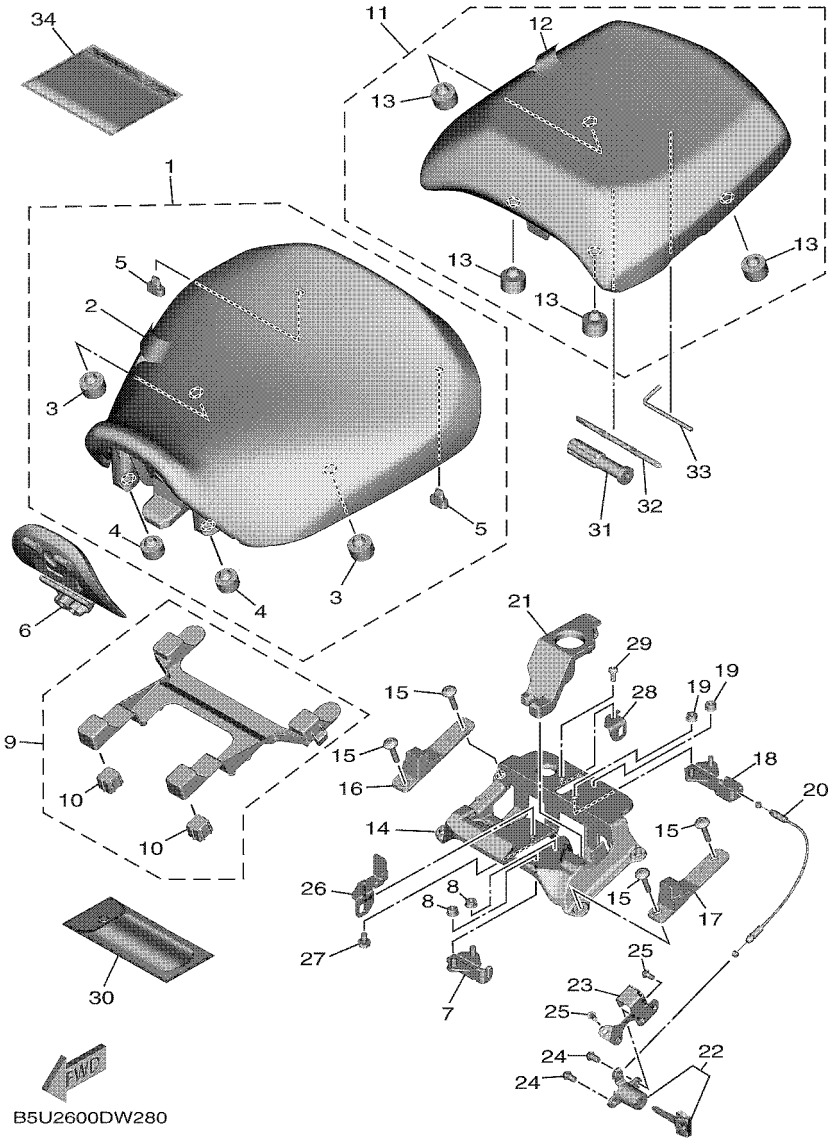

FIG. 29 SEAT

REF. NO.	PART NO.	DESCRIPTION	BHX2					REMARKS
28	2PP–2475J–00	BRACKET, SEAT LEVER 2	1					
29	90111–06065	BOLT, HEXAGON SOCKET BUTTON	1					
30	BAP–28100–00	TOOL KIT	1					
31	2H7–28151–00	GRIP, DRIVER	1					
32	2GV–28152–00	DRIVER	1					
33	23P–28164–00	WRENCH, HEXAGON 8	1					
34	4KG–28186–11	POUCH	1					

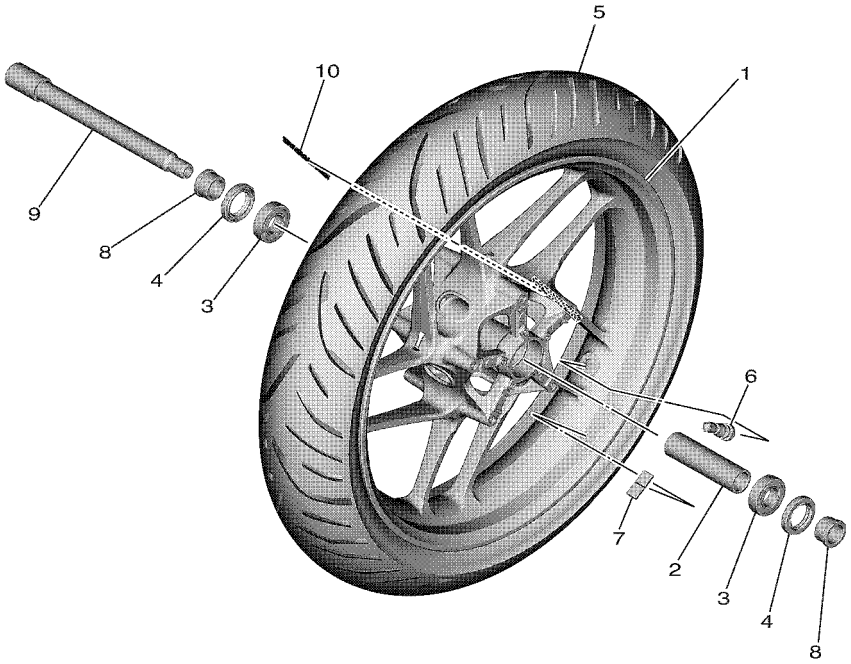

B5U1300DW290

FIG. 30 FRONT WHEEL

REF. NO.	PART NO.	DESCRIPTION	BHX2					REMARKS
1	B7N–25168–00–8L	CAST WHEEL, FRONT	1					NG FOR BWP1,SMX
2	4XV–25117–00	SPACER, BEARING	1					
3	93306–07208	BEARING	2					
4	93106–28043	OIL SEAL	2					
5	94112–17145	TIRE (120/70ZR17M/C 58W)	1					BRIDGSTONE
6	93900–00030	VALVE, RIM (TR412)	1					TAIHEIYO
7	23P–25398–00	BALANCER, WHEEL	1					UN
8	90387–22016	COLLAR	2					
9	4XV–25181–10	AXLE, WHEEL	1					
10	B7N–251G3–10	EMBLEM	1					

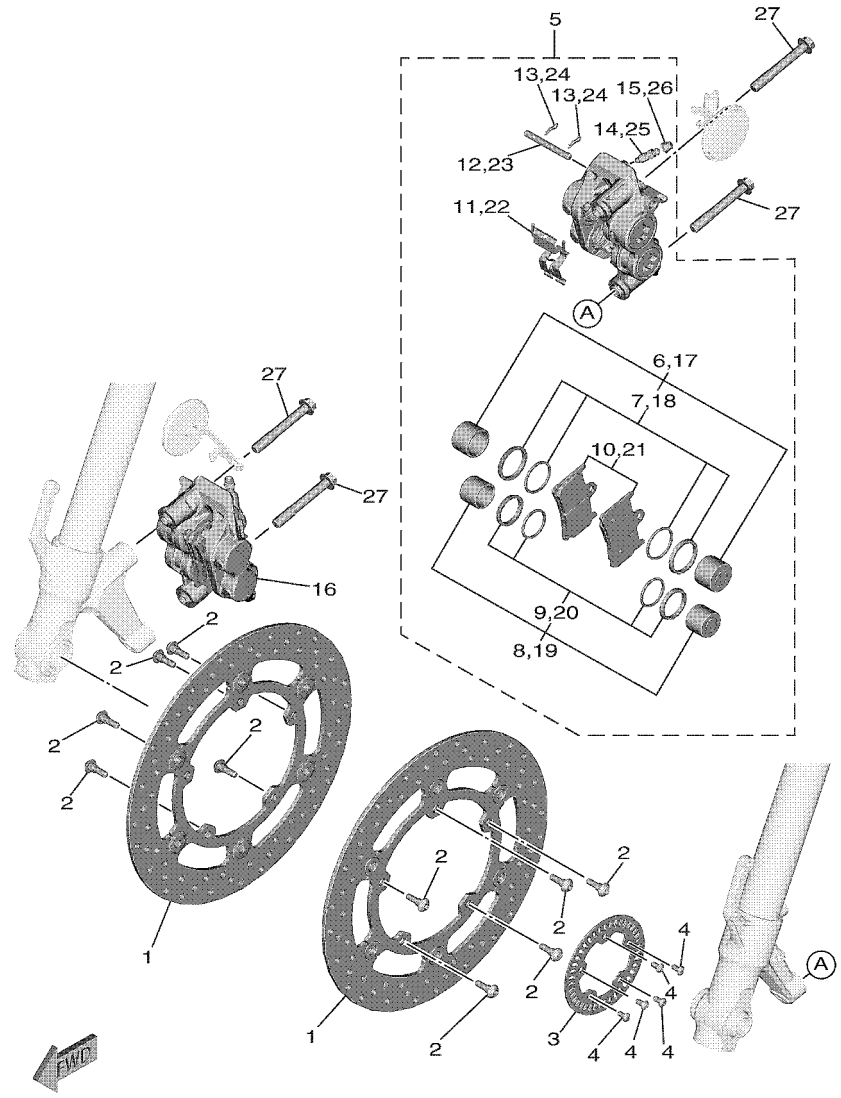

FIG. 31 FRONT BRAKE CALIPER

REF. NO.	PART NO.	DESCRIPTION	BHX2					REMARKS
1	1RC–2581T–00	DISK BRAKE ASSY	2					
2	90109–064G6	BOLT	10					
3	1SD–2517G–00	ROTOR, SENSOR	1					
4	90149–05029	SCREW	5					
5	1RC–2580T–00	CALIPER ASSY (LEFT)	1					
6	4SV–25802–10	.PISTON ASSY, CALIPER	1					
7	3GM–25803–10	..CALIPER SEAL KIT	1					
8	4SV–25802–00	.PISTON ASSY, CALIPER	1					
9	3MA–25803–10	..CALIPER SEAL KIT	1					
10	5SL–25805–00	.BRAKE PAD KIT	1					
11	13S–25919–00	.SUPPORT, PAD	1					
12	4SV–25924–00	.PIN, PAD	1					
13	3GM–25925–00	.CLIP	2					
14	1J3–25824–00	.SCREW, BLEED	1					
15	306–25825–01	.CAP	1					
16	1RC–2580U–00	CALIPER ASSY (RIGHT)	1					
17	4SV–25802–10	.PISTON ASSY, CALIPER	1					
18	3GM–25803–10	..CALIPER SEAL KIT	1					
19	4SV–25802–00	.PISTON ASSY, CALIPER	1					
20	3MA–25803–10	..CALIPER SEAL KIT	1					
21	5SL–25805–00	.BRAKE PAD KIT	1					
22	13S–25919–00	.SUPPORT, PAD	1					
23	4SV–25924–00	.PIN, PAD	1					
24	3GM–25925–00	.CLIP	2					
25	1J3–25824–00	.SCREW, BLEED	1					
26	306–25825–01	.CAP	1					
27	90105–10440	BOLT, FLANGE	4					

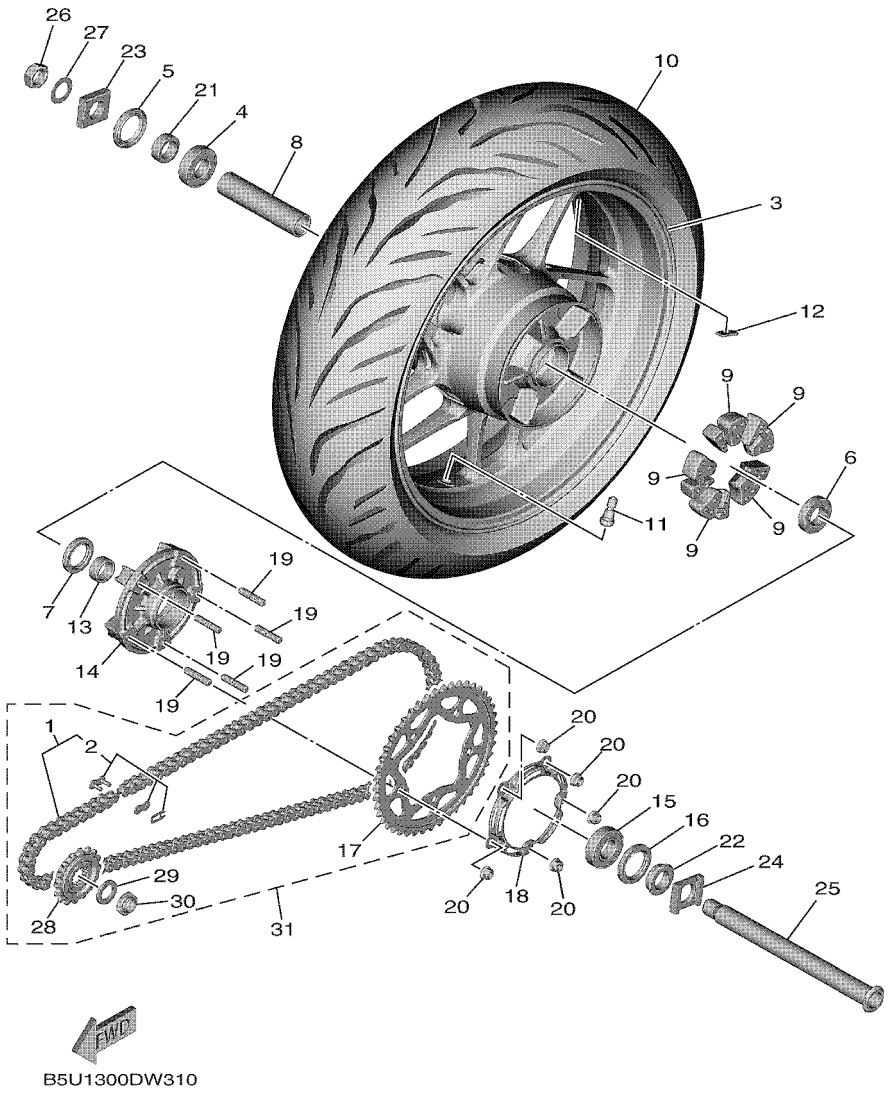

FIG. 32 REAR WHEEL

REF. NO.	PART NO.	DESCRIPTION	BHX2					REMARKS
1	94A40–18118	SET, CHAIN (DID525VZ2 118LL)	1					
2	94682–5502R	.JOINT, CHAIN (DID525VZ2 ZJ)	1					
3	B7N–25338–00–8L	CAST WHEEL, REAR	1					NG FOR BWP1,SMX
4	93306–20531	BEARING	1					
5	93106–40013	OIL SEAL	1					
6	93306–07806	BEARING	1					
7	93106–35042	OIL SEAL	1					
8	90387–28031	COLLAR	1					
9	BD5–25364–00	DAMPER	5					
10	94118–17092	TIRE (180/55ZR17M/C 73W)	1					BRIDGSTONE
11	93900–00030	VALVE, RIM (TR412)	1					TAIHEIYO
12	23P–25398–00	BALANCER, WHEEL	1					UN
13	5EB–25377–00	COLLAR, WHEEL	1					
14	2CR–25366–00	CLUTCH, HUB	1					
15	93306–20531	BEARING	1					
16	93106–40013	OIL SEAL	1					
17	B7N–25445–10	SPROCKET, DRIVEN (45T)	1					
18	B7N–2537W–10	BRACKET 1	1					
19	90116–10048	BOLT, STUD	5					
20	95602–10200	NUT, SELF-LOCKING	5					
21	13S–25376–00	COLLAR, WHEEL	1					
22	90387–28029	COLLAR	1					
23	4XV–25388–00	PULLER, CHAIN 1	1					
24	4XV–25389–00	PULLER, CHAIN 2	1					
25	4XV–25381–10	AXLE, WHEEL	1					
26	90185–24002	NUT, SELF-LOCKING	1					
27	90201–25027	WASHER, PLATE	1					

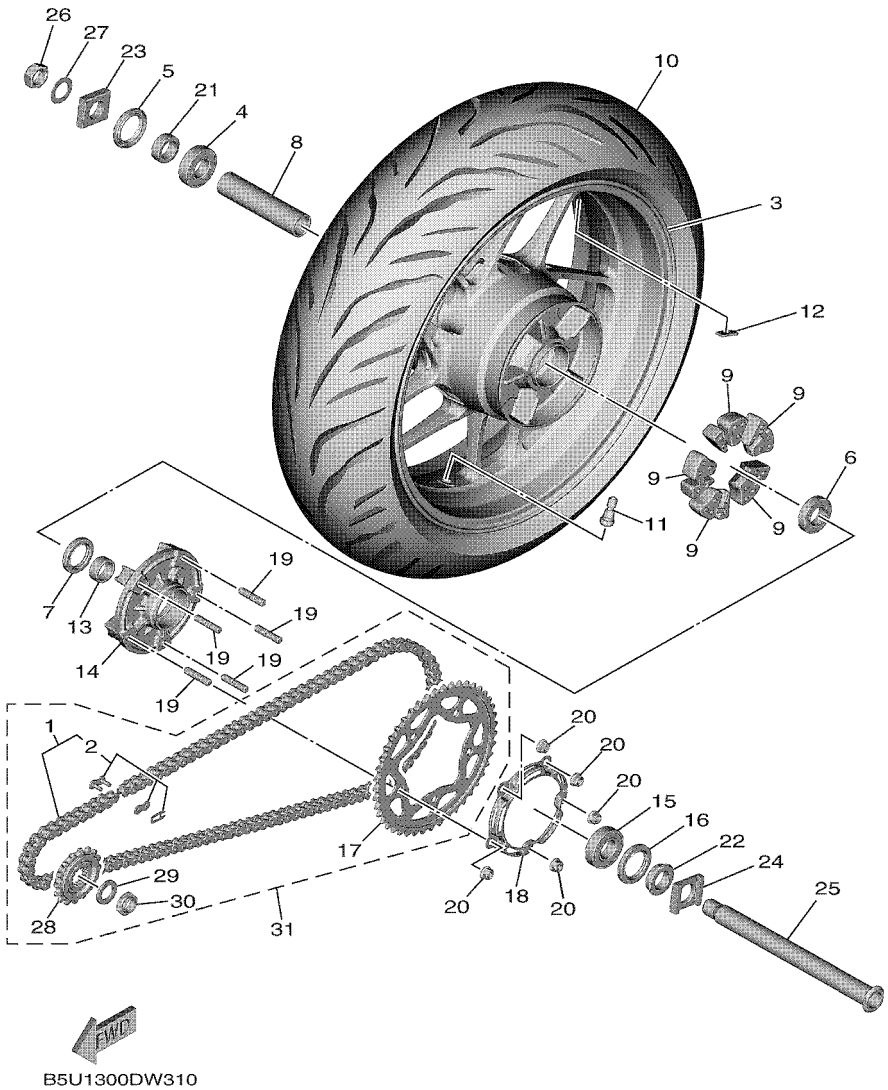

FIG. 32 REAR WHEEL

REF. NO.	PART NO.	DESCRIPTION	BHX2					REMARKS
28	2CR–17460–00	SPROCKET, DRIVE (16T)	1					
29	90208–22002	WASHER, CONICAL SPRING	1					
30	90179–22019	NUT	1					
31	BAP–W001A–00	CHAIN & SPROCKET KIT	1					AP

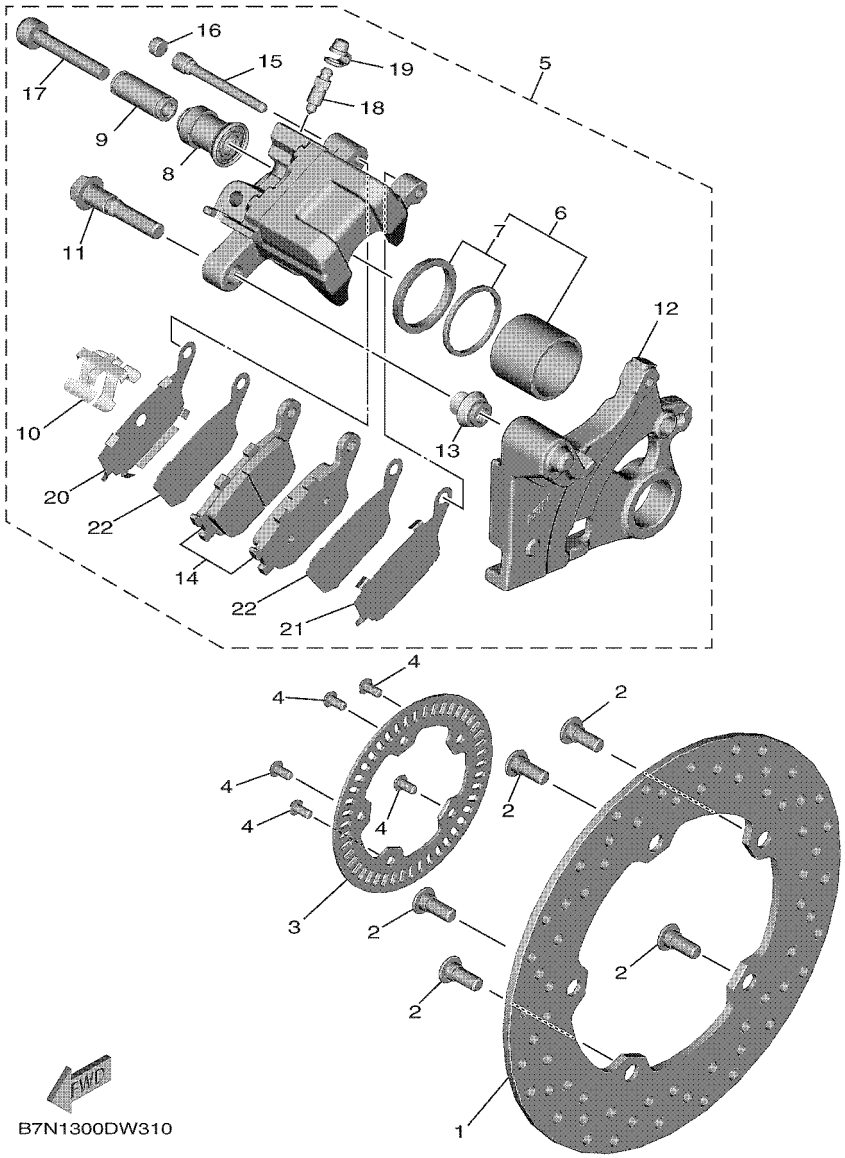

FIG. 33 REAR BRAKE CALIPER

REF. NO.	PART NO.	DESCRIPTION	BHX2					REMARKS
1	1RC–2582W–00	DISK, REAR BRAKE 2	1					
2	90109–08045	BOLT	5					
3	2PW–2517G–00	ROTOR, SENSOR	1					
4	90149–05029	SCREW	5					
5	B7N–2580W–00	CALIPER ASSY, REAR 2	1					
6	5SL–25802–00	.PISTON ASSY, CALIPER	1					
7	5SL–25803–00	..CALIPER SEAL KIT	1					
8	5SL–25917–00	.BOOT, CALIPER	1					
9	5SL–25838–00	.SLEEVE, CALIPER	1					
10	5SL–25919–00	.SUPPORT, PAD	1					
11	5SL–25914–00	.PIN, SLIDE	1					
12	B7N–25921–50	.BRACKET, SUPPORT	1					
13	3JD–25917–00	.BOOT, CALIPER	1					
14	5VX–25806–00	.BRAKE PAD KIT 2	1					
15	8CR–25924–00	.PIN, PAD	1					
16	5DH–25916–50	.PLUG	1					
17	1RC–25926–00	.BOLT	1					
18	8CR–25824–00	.SCREW, BLEED	1					
19	1UY–25825–51	.CAP	1					
20	5SL–25827–00	.SHIM, CALIPER	1					
21	5SL–25827–10	.SHIM, CALIPER	1					
22	5SL–25828–01	.SHIM, CALIPER	2					

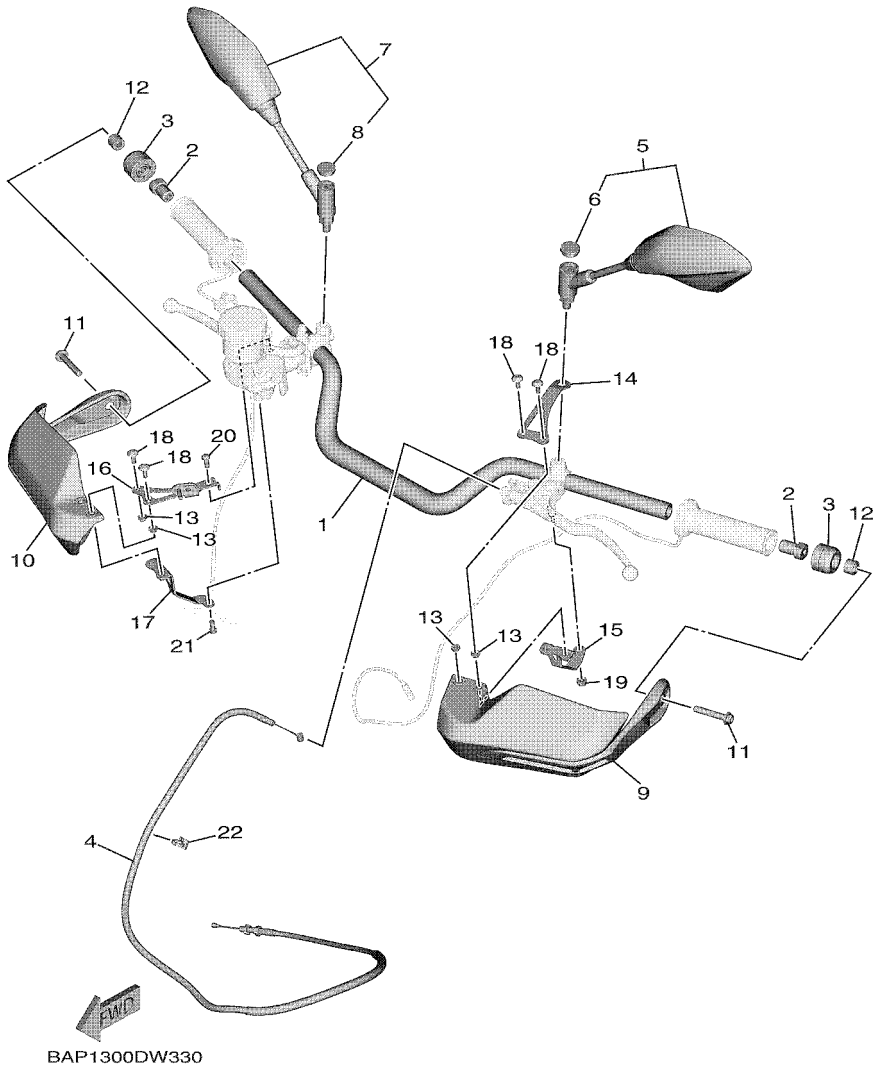

FIG. 34 STEERING HANDLE & CABLE

REF. NO.	PART NO.	DESCRIPTION	BHX2					REMARKS
1	B5U–26111–10	HANDLEBAR	1					
2	B5U–26246–00	END, GRIP	2					
3	B5U–2624B–00	END, GRIP 2	2					
4	BLG–26335–00	WIRE, CLUTCH	1					
5	B7N–26280–00	REAR VIEW MIRROR ASSY (LEFT)	1					
6	5PS–26133–20	.CAP	1					
7	B7N–26290–00	REAR VIEW MIRROR ASSY (RIGHT)	1					
8	5PS–26133–20	.CAP	1					
9	B5U–26141–00	GUARD, BRUSH 1	1					
10	B5U–26142–00	GUARD, BRUSH 2	1					
11	90110–08232	BOLT, HEXAGON SOCKET HEAD	2					
12	B5U–26021–00	SPACER	2					
13	90387–05021	COLLAR	4					
14	B5U–26223–00	BRACKET, HANDLE 1	1					
15	B5U–2622A–00	BRACKET, HANDLE 3	1					
16	B5U–26224–00	BRACKET, HANDLE 2	1					
17	B5U–2622E–00	BRACKET, HANDLE 4	1					
18	90111–05021	BOLT, HEXAGON SOCKET BUTTON	4					
19	95607–06200	NUT, SELF U-FLANGE	1					
20	92017–06014	BOLT, BUTTON HEAD	1					
21	92017–06014	BOLT, BUTTON HEAD	1					
22	90464–12001	CLAMP	1					

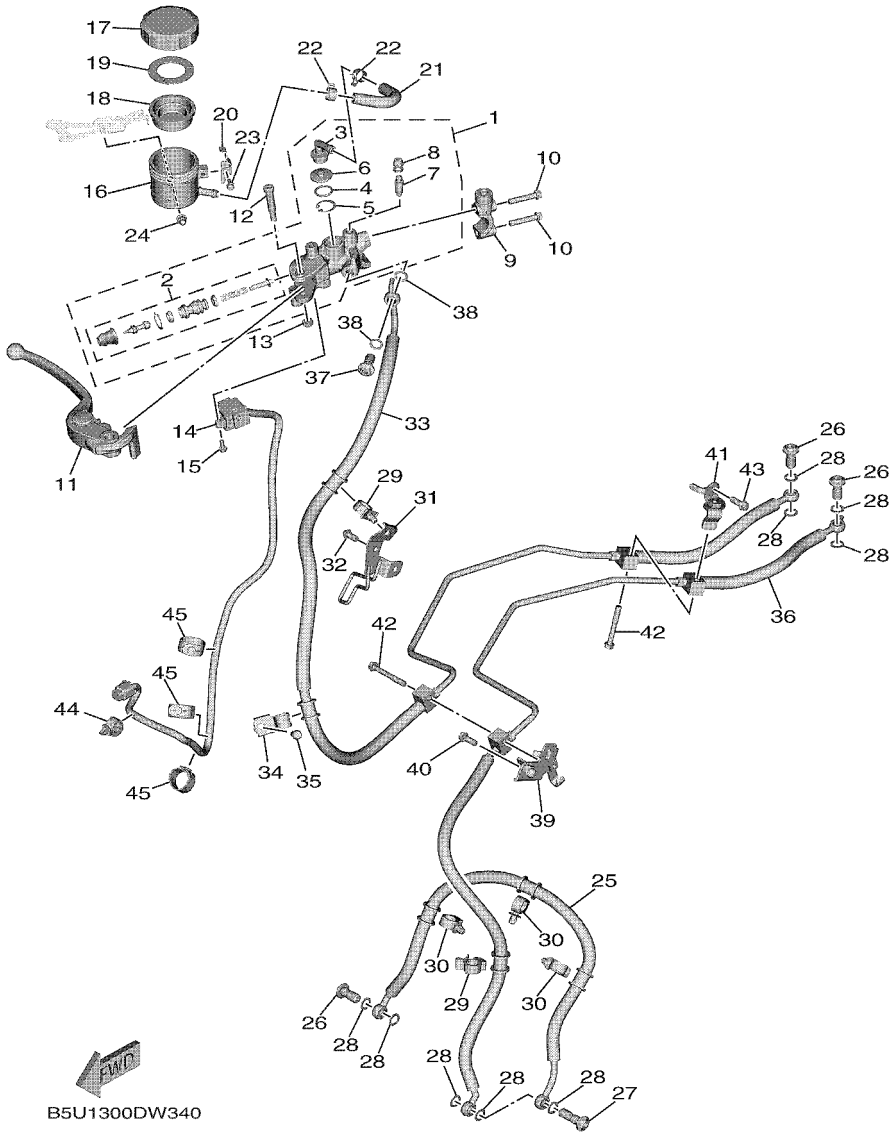

FIG. 35 FRONT MASTER CYLINDER

REF. NO.	PART NO.	DESCRIPTION	BHX2					REMARKS
1	B7N–2580A–00	MASTER CYLINDER SUB ASSY 2	1					
2	2CR–25807–00	.CYLINDER KIT, MASTER	1					
3	2VN–2582A–50	.JOINT	1					
4	93210–15620	.O-RING	1					
5	2VN–25866–00	.CIRCLIP	1					
6	3FV–2589A–00	.COVER, DUST	1					
7	1UY–25824–51	.SCREW, BLEED	1					
8	1UY–25825–51	.CAP	1					
9	B7N–25867–00	BRACKET, MASTER CYLINDER	1					
10	B7N–26332–00	BOLT	2					
11	BAM–83922–00	LEVER 2	1					
12	2CR–2589F–00	BOLT, LEVER	1					
13	95607–06100	NUT, SELF-LOCKING	1					
14	B5U–83980–00	FRONT STOP SWITCH ASSY	1					
15	97607–04316	SCREW, WITH WASHER	1					
16	2CR–25894–00	TANK, RESERVOIR	1					
17	3GM–25852–50	CAP, RESERVOIR	1					
18	3FV–25854–00	DIAPHRAGM, RESERVOIR	1					
19	2CR–25855–00	BUSH,DIAPHRAGM	1					
20	2CR–2589G–00	HOLDER	1					
21	B7N–25895–00	HOSE, RESERVOIR	1					
22	90467–12085	CLIP	2					
23	3GM–2589H–00	SCREW	1					
24	90176–05003	NUT, CAP	1					
25	B7N–25872–00	HOSE, BRAKE 1	1					
26	90401–10172	BOLT, UNION	3					
27	90401–10042	BOLT, UNION	1					

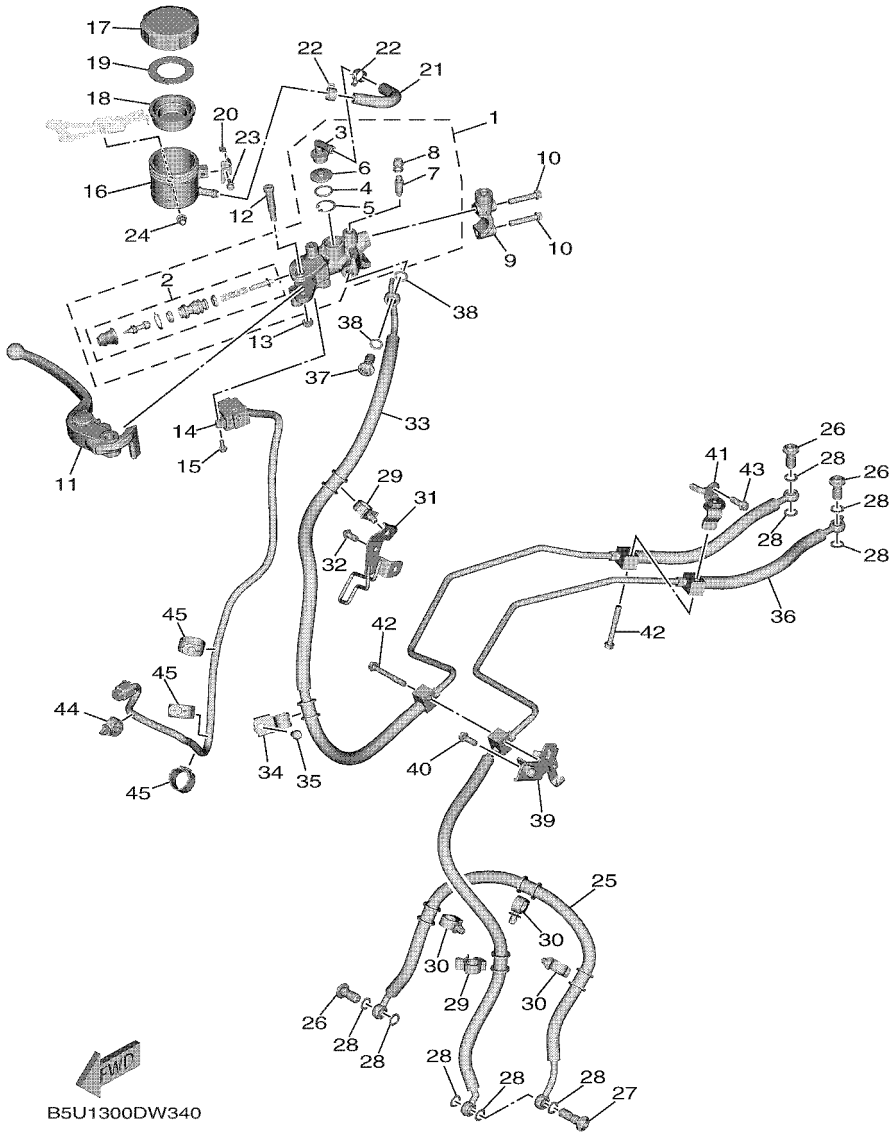

FIG. 35 FRONT MASTER CYLINDER

REF. NO.	PART NO.	DESCRIPTION	BHX2					REMARKS
28	90430–10005	GASKET	9					
29	90464–14013	CLAMP	2					
30	90464–18002	CLAMP	3					
31	B5U–2587A–00	HOLDER, BRAKE HOSE 4	1					
32	92017–06012	BOLT, BUTTON HEAD	1					
33	B5U–2584A–02	BRAKE HOSE ASSY	1					
34	B5U–25875–00	HOLDER, BRAKE HOSE 1	1					
35	92017–06012	BOLT, BUTTON HEAD	1					
36	B7N–2584B–01	HOSE, BRAKE	1					
37	90401–10172	BOLT, UNION	1					
38	90430–10005	GASKET	2					
39	B7N–85132–00	BRACKET, REFLECTOR 1	1					
40	90105–06187	BOLT, FLANGE	1					
41	B7N–2612E–00	BRACKET	1					
42	95022–06045	BOLT, FLANGE	2					
43	90105–06187	BOLT, FLANGE	1					
44	90464–13249	CLAMP	1					
45	B5U–82591–10	BAND	3					

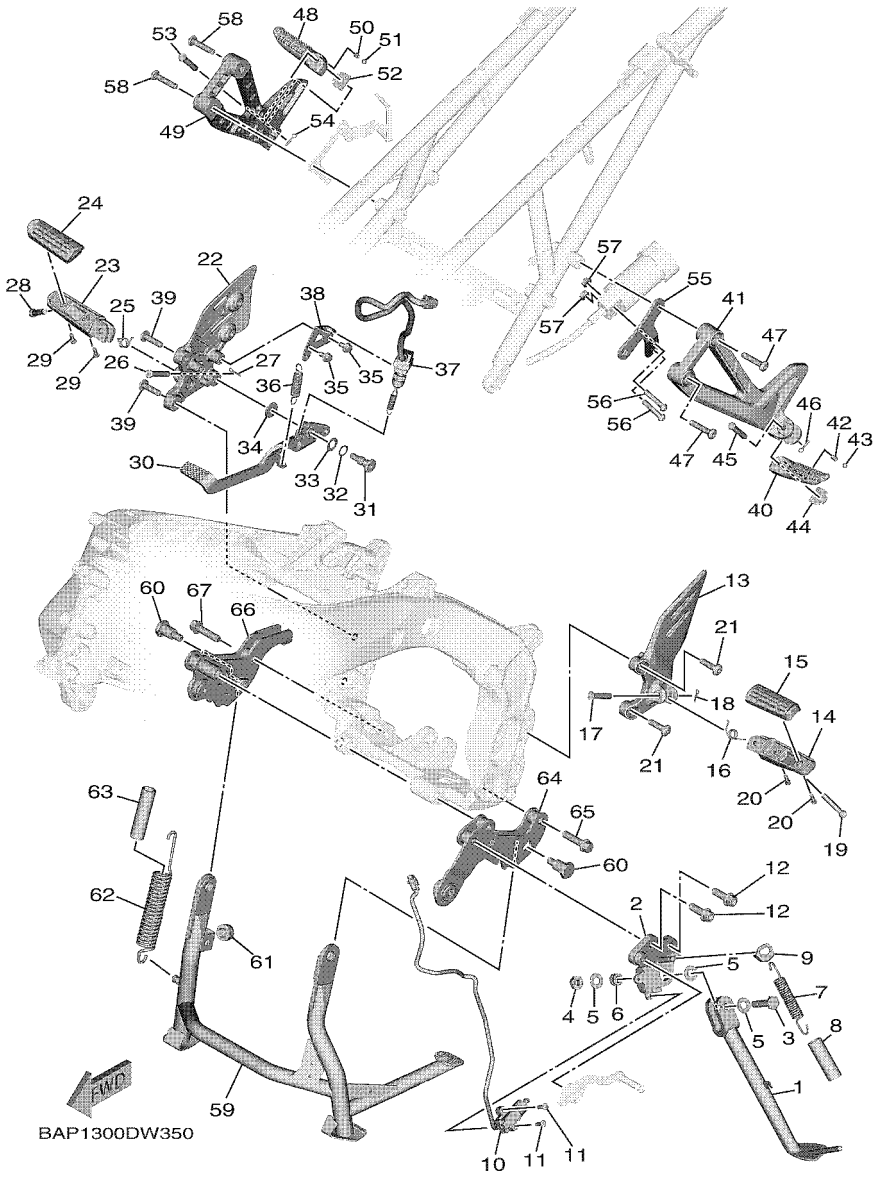

FIG. 36 STAND & FOOTREST

REF. NO.	PART NO.	DESCRIPTION	BHX2					REMARKS
1	B7N–27311–00	STAND, SIDE	1					
2	B5U–27321–00	BRACKET, SIDE STAND	1					
3	90101–10034	BOLT	1					
4	90185–10012	NUT, SELF-LOCKING	1					
5	90201–10075	WASHER, PLATE	3					
6	90387–10020	COLLAR	1					
7	90506–26014	SPRING, TENSION	1					
8	90445–197J2	HOSE (L60)	1					
9	B7N–27315–00	LINK, SIDE STAND	1					
10	B7N–82566–00	SWITCH, SIDE STAND	1					
11	90149–05037	SCREW	2					
12	90105–10189	BOLT, FLANGE	2					
13	B7N–27442–00	BRACKET 2	1					
14	B5U–27451–00	FOOTREST 3	1					
15	BD5–27413–00	COVER, FOOTREST	1					
16	90508–18134	SPRING, TORSION	1					
17	91701–08040	PIN	1					
18	91402–25015	PIN, COTTER	1					
19	90109–086F8	BOLT	1					
20	90157–05025	SCREW, PAN HEAD	2					
21	90110–08220	BOLT, HEXAGON SOCKET HEAD	2					
22	B7N–27443–00	BRACKET 3	1					
23	B5U–27461–00	FOOTREST 4	1					
24	BD5–27413–00	COVER, FOOTREST	1					
25	90508–18135	SPRING, TORSION	1					
26	91701–08040	PIN	1					
27	91402–25015	PIN, COTTER	1					

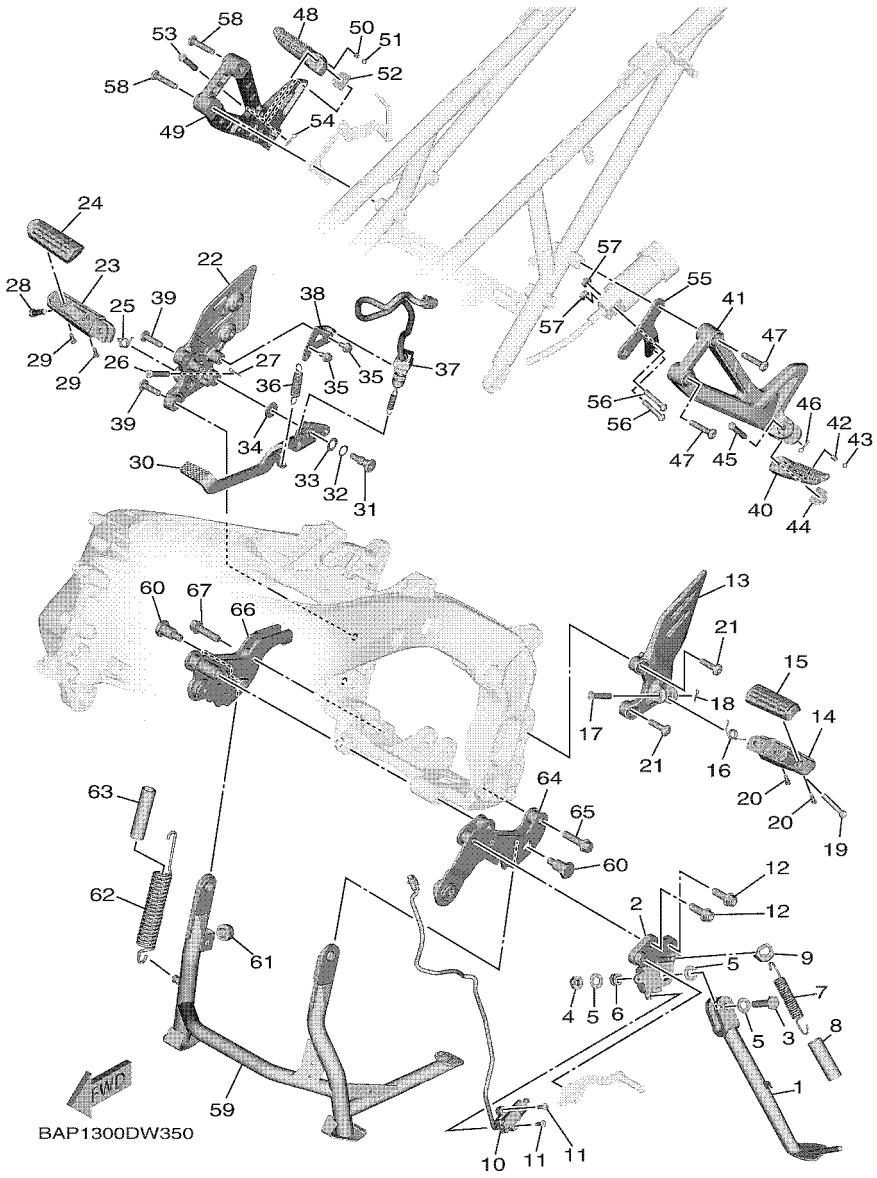

FIG. 36 STAND & FOOTREST

REF. NO.	PART NO.	DESCRIPTION	BHX2					REMARKS
28	90109–086F8	BOLT	1					
29	90157–05025	SCREW, PAN HEAD	2					
30	B7N–27211–00	PEDAL, BRAKE	1					
31	4BP–27434–01	BOLT	1					
32	90206–12074	WASHER, WAVE	1					
33	90201–12051	WASHER, PLATE	1					
34	90201–08053	WASHER, PLATE	1					
35	95D02–06012	BOLT, FLANGE DEEP RECESS	2					
36	90506–18022	SPRING, TENSION	1					
37	BAM–82530–00	STOP SWITCH ASSY	1					
38	B7N–2144G–00	STAY, STOP SWITCH	1					
39	90110–08220	BOLT, HEXAGON SOCKET HEAD	2					
40	B7N–27431–00	FOOTREST, REAR 1	1					
41	B5U–2741L–00	BRACKET 4	1					
42	90501–12743	SPRING, COMPRESSION	1					
43	93501–04011	BALL	1					
44	5VX–27437–00	WASHER, SPECIAL	1					
45	91702–08040	PIN, CLEVIS	1					
46	91401–25015	PIN, COTTER	1					
47	90149–08220	SCREW	2					
48	B7N–27441–00	FOOTREST, REAR 2	1					
49	B5U–2742L–00	BRACKET 5	1					
50	90501–12743	SPRING, COMPRESSION	1					
51	93501–04011	BALL	1					
52	5VX–27437–00	WASHER, SPECIAL	1					
53	91702–08040	PIN, CLEVIS	1					
54	91401–25015	PIN, COTTER	1					

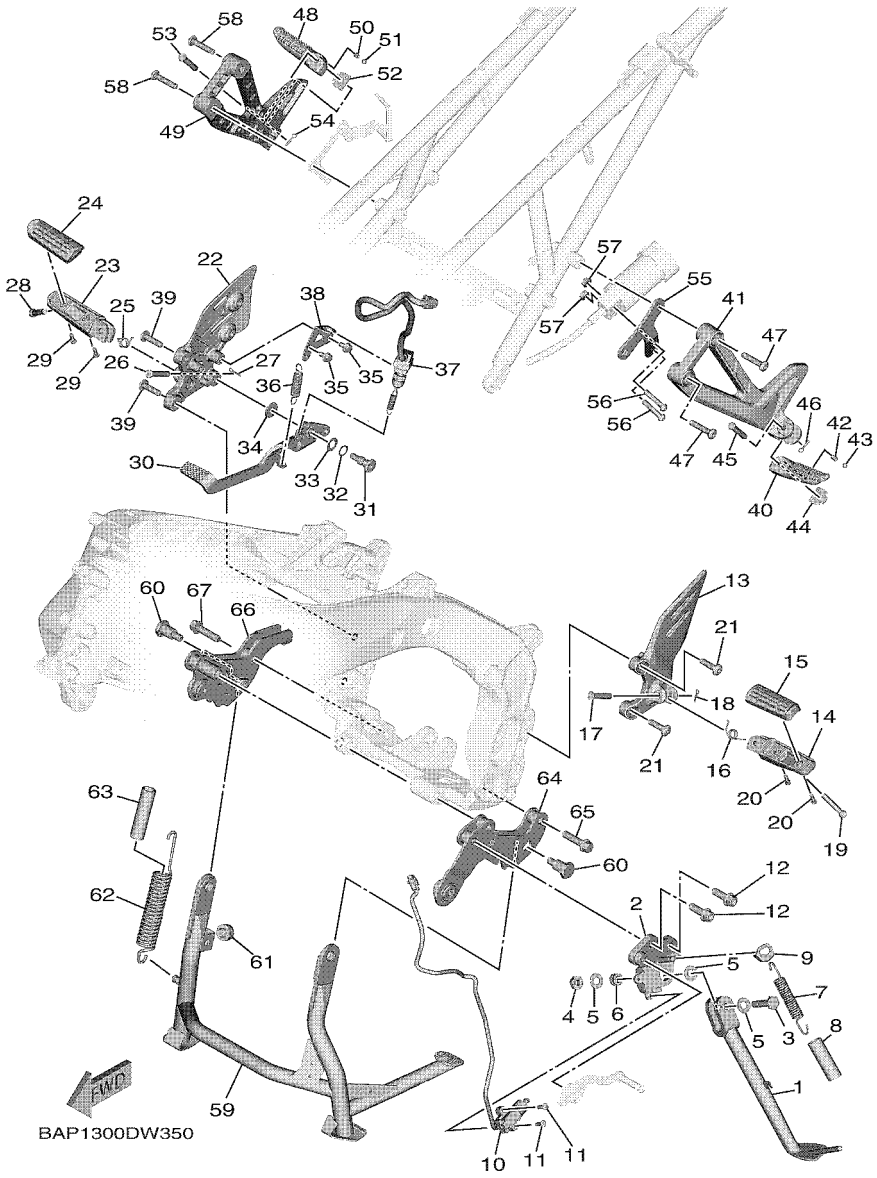

FIG. 36 STAND & FOOTREST

REF. NO.	PART NO.	DESCRIPTION	BHX2					REMARKS
55	BAP–274A3–00	BRACKET, ADAPTER 1	1					
56	92017–06030	BOLT, BUTTON HEAD	2					
57	95702–06500	NUT, FLANGE	2					
58	90149–08220	SCREW	2					
59	B5U–27111–00	STAND, MAIN	1					
60	90109–10029	BOLT	2					
61	36C–27114–00	STOPPER, MAIN STAND	1					
62	90506–40012	SPRING, TENSION	1					
63	BC3–2247A–00	HOSE 1	1					
64	B5U–27151–00	BRACKET, MAIN STAND	1					
65	90105–10334	BOLT, FLANGE	1					
66	B5U–27152–00	BRACKET, MAIN STAND 2	1					
67	90105–10334	BOLT, FLANGE	1					

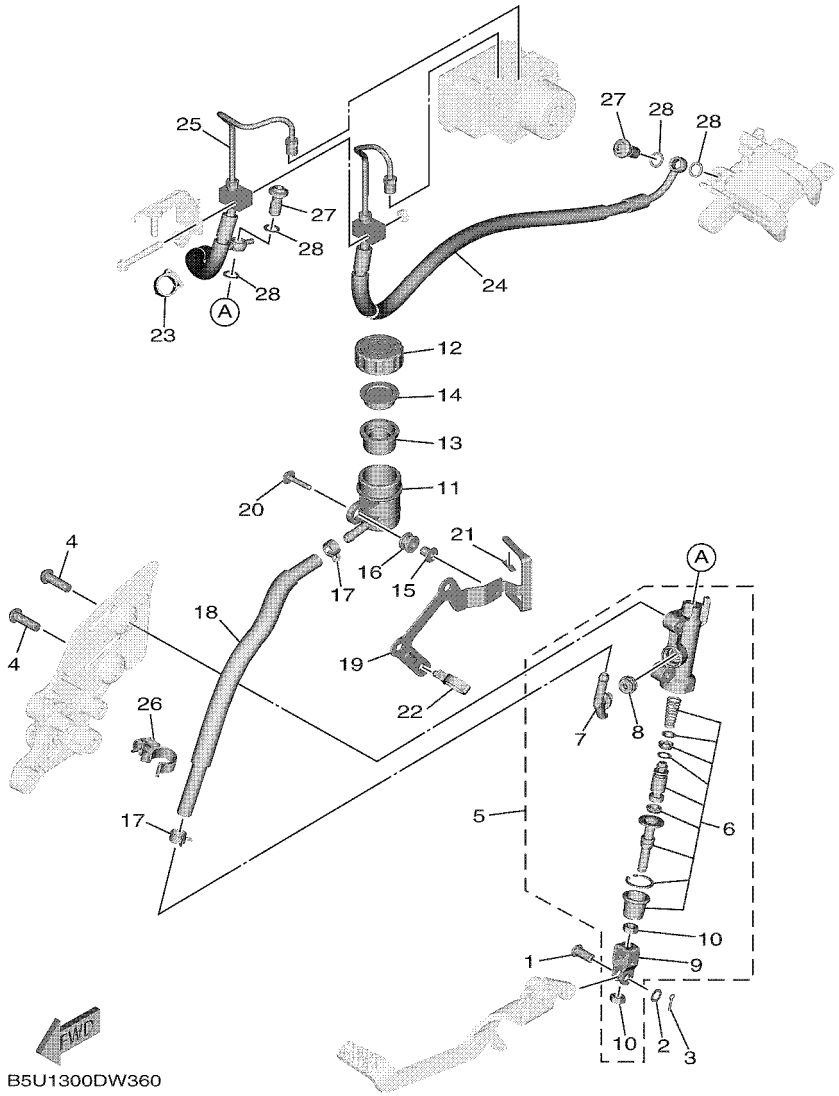

FIG. 37 REAR MASTER CYLINDER

REF. NO.	PART NO.	DESCRIPTION	BHX2					REMARKS
1	90240–08005	PIN, CLEVIS	1					
2	90201–08066	WASHER, PLATE	1					
3	91401–20012	PIN, COTTER	1					
4	92014–08025	BOLT, BUTTON HEAD	2					
5	56P–2583V–00	RR. MASTER CYLINDER ASSY.	1					
6	56P–25808–50	.CYLINDER KIT, MASTER	1					
7	2D1–2582A–00	.JOINT	1					
8	4BP–2585F–01	.O-RING	1					
9	4BP–27222–02	.JOINT	1					
10	90170–08010	.NUT	2					
11	14B–25894–00	TANK, RESERVOIR	1					
12	2C0–25852–00	CAP, RESERVOIR	1					
13	2VN–25854–00	DIAPHRAGM, RESERVOIR	1					
14	2VN–25855–00	BUSH,DIAPHRAGM	1					
15	90387–05028	COLLAR	1					
16	2C0–26326–00	GROMMET	1					
17	90467–12085	CLIP	2					
18	B5U–25895–50	HOSE, RESERVOIR	1					
19	B5U–2582E–00	HOLDER, RESERVE TANK	1					
20	90111–05014	BOLT, HEXAGON SOCKET BUTTON	1					
21	90520–01002	DAMPER, PLATE	1					
22	90464–21003	CLAMP	1					
23	90464–16003	CLAMP	1					
24	B5U–2581K–00	HOSE, BRAKE 5	1					
25	B7N–2581J–00	HOSE, BRAKE 4	1					
26	90464–18013	CLAMP	1					
27	90401–10172	BOLT, UNION	2					

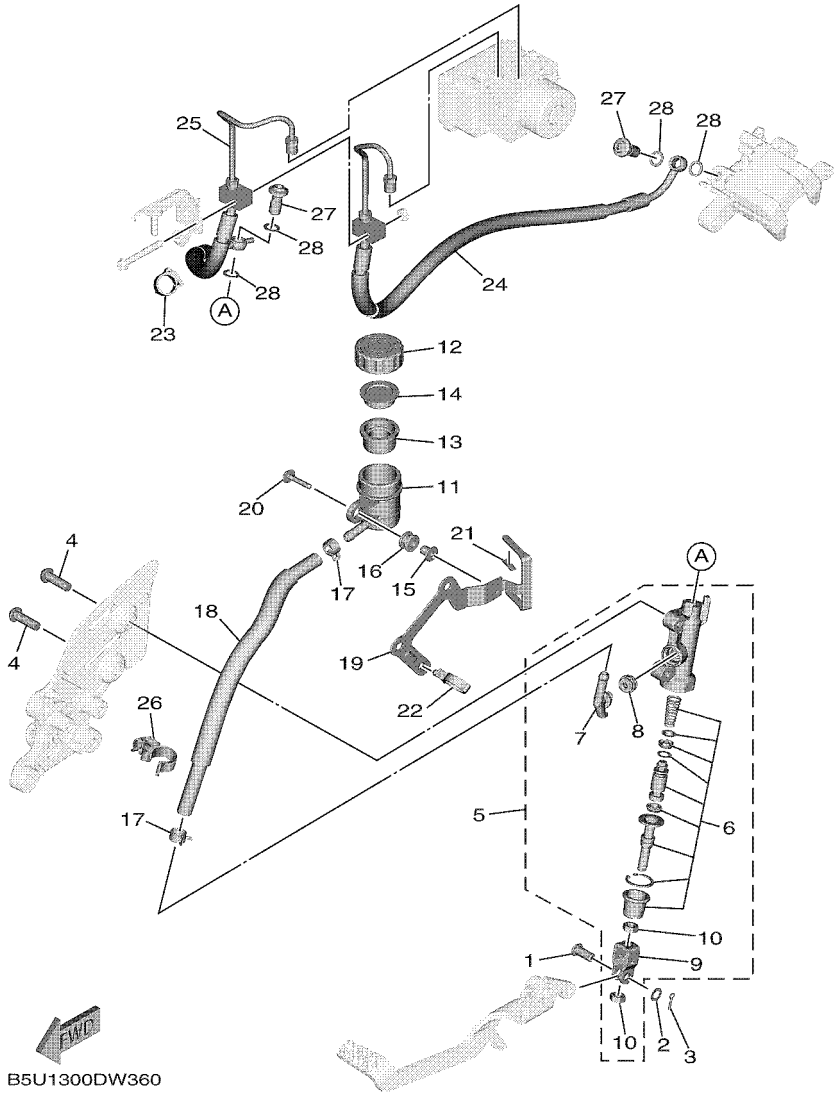

FIG. 37 REAR MASTER CYLINDER

REF. NO.	PART NO.	DESCRIPTION	BHX2					REMARKS
28	90430–10005	GASKET	4					

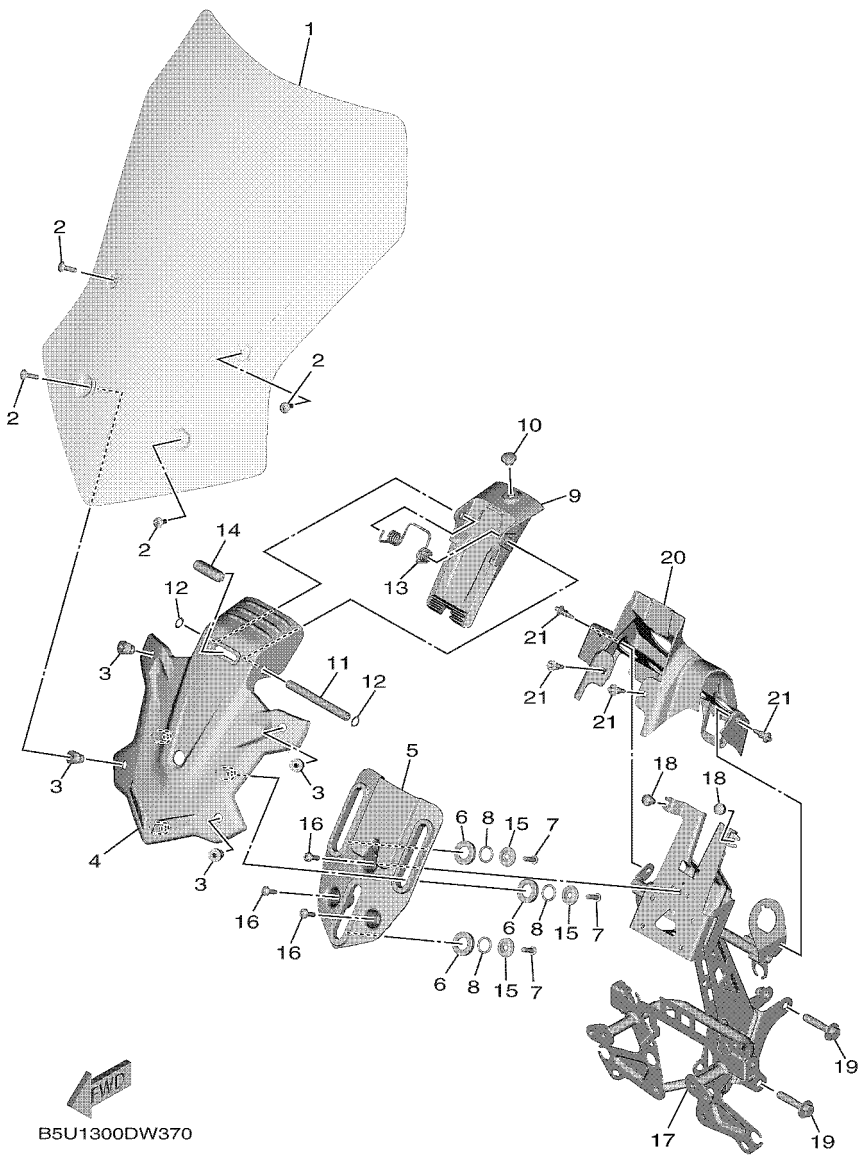

FIG. 38 WINDSHIELD

REF. NO.	PART NO.	DESCRIPTION	BHX2					REMARKS
1	B5U–28381–00	WINDSHIELD	1					
2	90150–05024	SCREW, ROUND HEAD	4					
3	90179–05003	NUT	4					
4	B5U–2831R–00	STAY, MAIN 1	1					
5	B5U–2831T–00	STAY, SUPPORT 1	1					
6	B5C–28319–00	WASHER	3					
7	92017–05016	BOLT, BUTTON HEAD	3					
8	93210–14MF4	O-RING	3					
9	B5C–2836X–00	KNOB, 1	1					
10	90338–07010	PLUG	1					
11	B5C–2835B–00	SHAFT, 1	1					
12	99009–09800	CIRCLIP	2					
13	B5C–28388–00	SPRING	1					
14	B5C–2836T–00	DAMPER, LOCATING 1	1					
15	B5C–28373–00	COLLAR	3					
16	90111–05061	BOLT, HEXAGON SOCKET BUTTON	3					
17	B5U–28356–01	STAY 1	1					
18	90338–06007	PLUG	2					
19	90119–08179	BOLT, WITH WASHER	2					
20	B5U–2836M–01	PANEL, INNER 3	1					
21	90269–06001	RIVET	4					

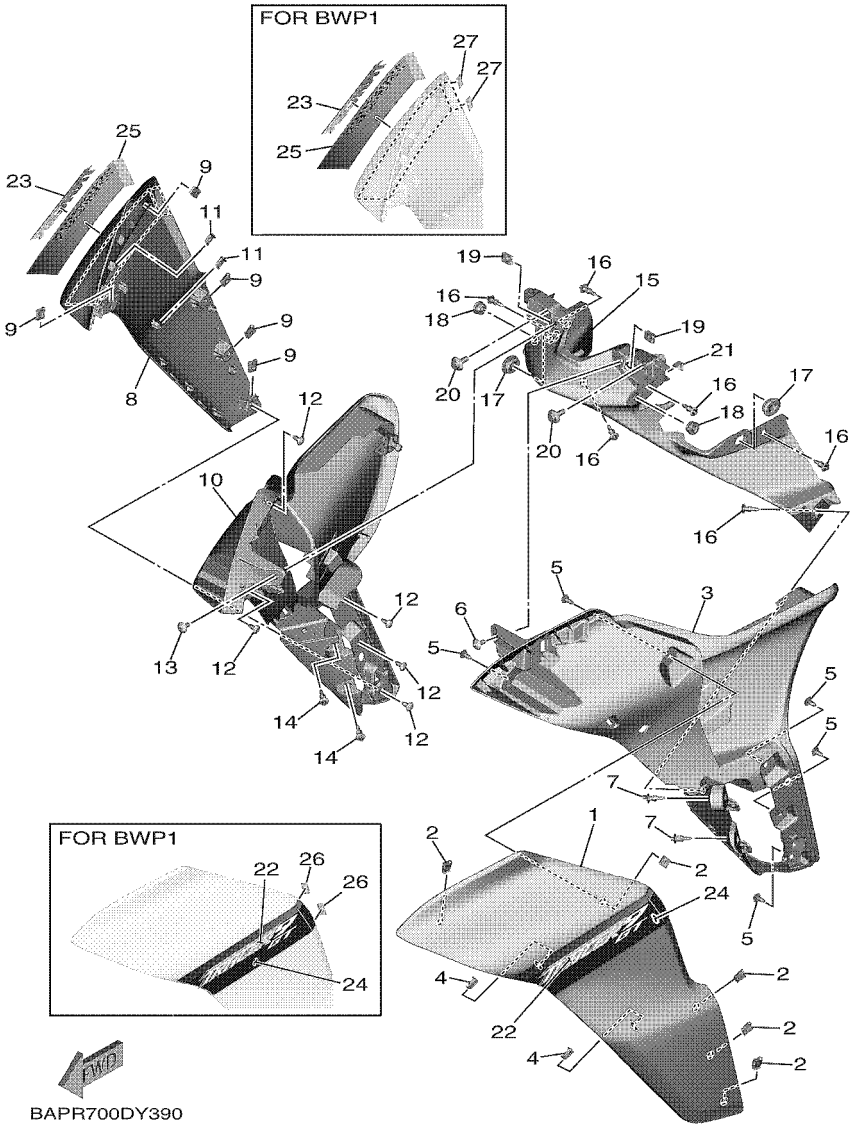

FIG. 39 COWLING

REF. NO.	PART NO.	DESCRIPTION	BHX2					REMARKS
1	B5U–2835U–00–P3	PANEL 1	1					UR FOR BWP1
	B5U–2835U–00–P4	PANEL 1	1					UR MBL2 FOR SMX
2	90183–05042	NUT, SPRING	5					
3	B5U–2836K–00	PANEL, INNER 1	1					
4	90464–04005	CLAMP	2					
5	97707–50012	SCREW, TRUSS HEAD TAPPING	5					
6	90111–05049	BOLT, HEXAGON SOCKET BUTTON	1					
7	90269–06001	RIVET	2					
8	B5U–2835V–00–P3	PANEL 2	1					UR FOR BWP1
	B5U–2835V–00–P4	PANEL 2	1					UR MBL2 FOR SMX
9	90183–05042	NUT, SPRING	5					
10	B5U–2836L–00	PANEL, INNER 2	1					
11	90464–04005	CLAMP	2					
12	97707–50012	SCREW, TRUSS HEAD TAPPING	5					
13	90111–05049	BOLT, HEXAGON SOCKET BUTTON	1					
14	90269–06001	RIVET	2					
15	B5U–2835J–00	BODY, FRONT UNDER 1	1					
16	90269–06001	RIVET	6					
17	90480–01559	GROMMET	2					
18	90480–10003	GROMMET	2					
19	90183–05076	NUT, SPRING	2					
20	90109–06043	BOLT	2					
21	13S–28371–00	DAMPER	1					
22	2PP–2839B–11	EMBLEM 3D	1					
23	2PP–2839B–11	EMBLEM 3D	1					
24	BAP–28391–30	GRAPHIC 1	1					UR FOR BWP1
	BAP–28391–40	GRAPHIC 1	1					UR FOR SMX

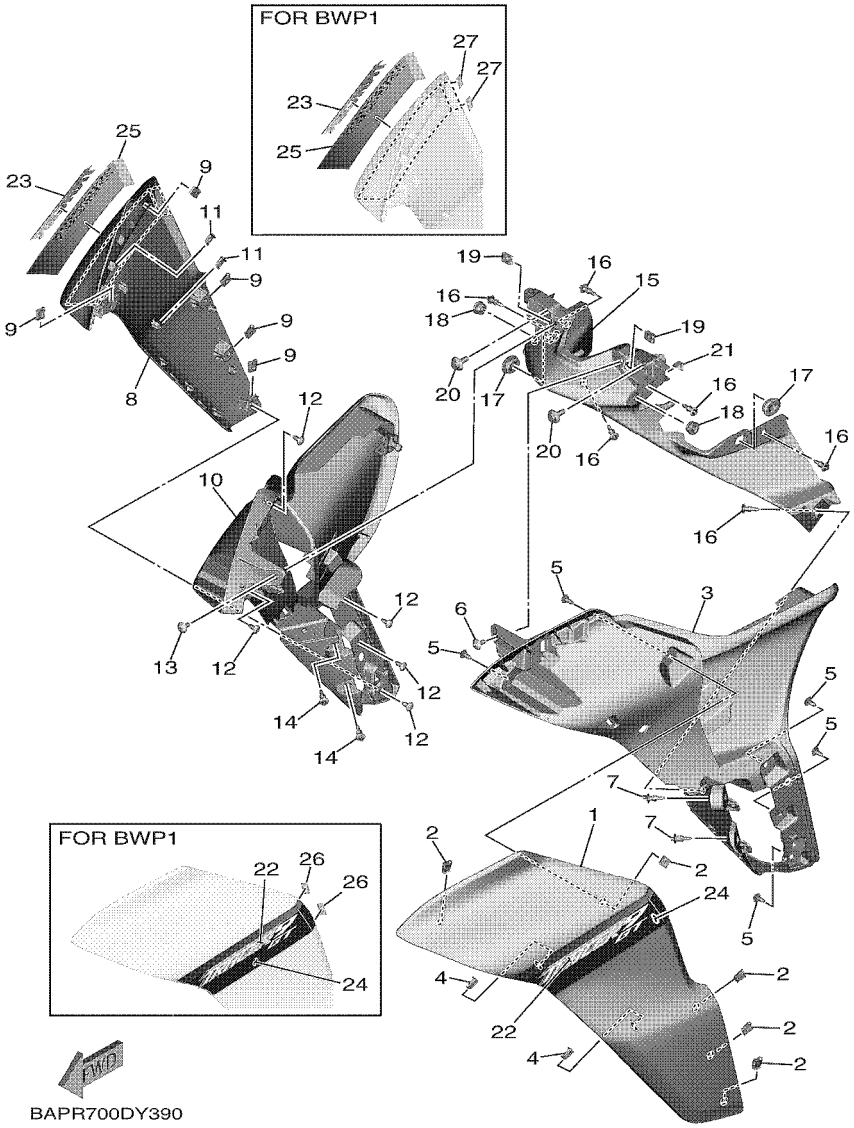

FIG. 39 COWLING

REF. NO.	PART NO.	DESCRIPTION	BHX2					REMARKS
25	BAP–28392–30	GRAPHIC 2	1					UR FOR BWP1
	BAP–28392–40	GRAPHIC 2	1					UR FOR SMX
26	B3L–24595–00	PROTECTOR	2					FOR BWP1
27	B3L–24595–00	PROTECTOR	2					FOR BWP1

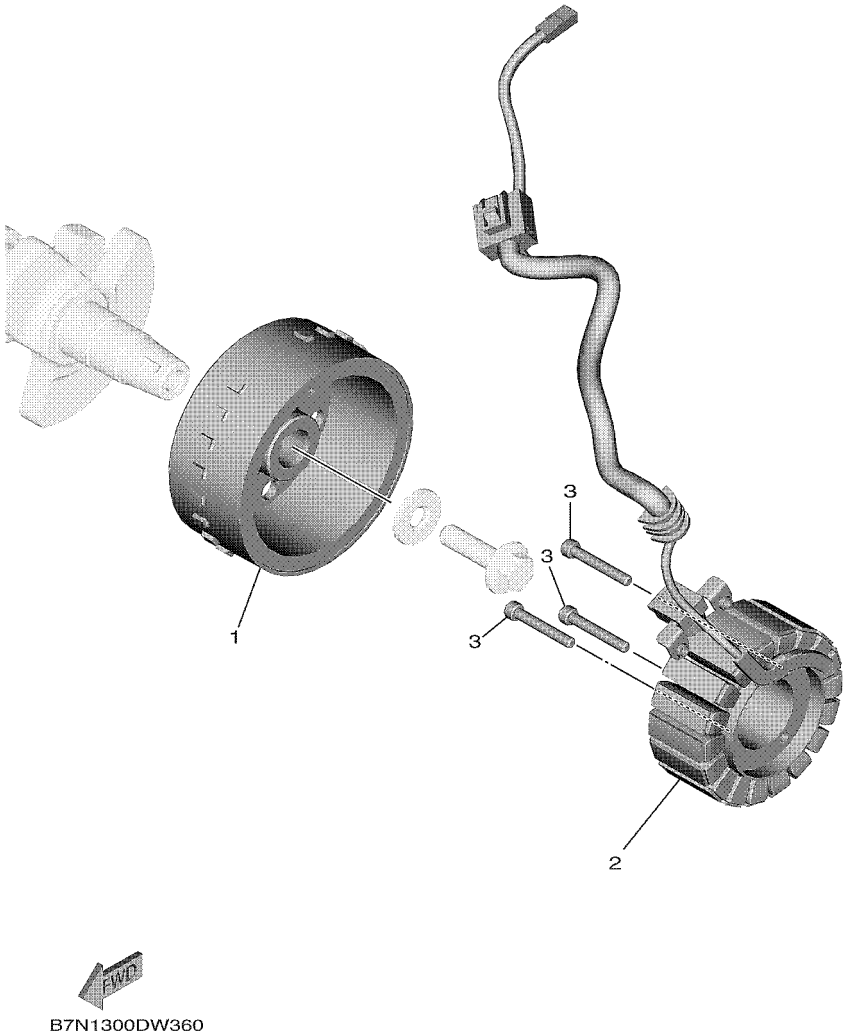

FIG. 40 GENERATOR

REF. NO.	PART NO.	DESCRIPTION	BHX2					REMARKS
1	1RC–81450–01	ROTOR ASSY	1					
2	B7N–81410–00	STATOR ASSY	1					
3	90110–06223	BOLT, HEXAGON SOCKET HEAD	3					

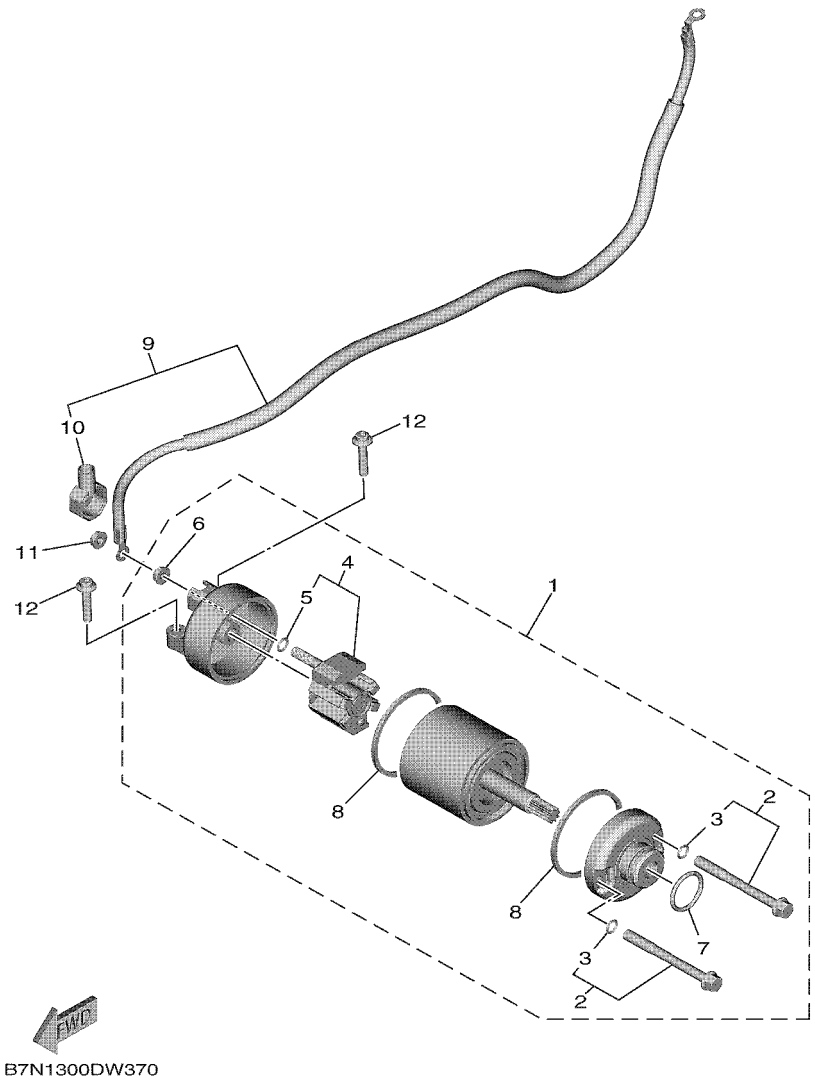

FIG. 41 STARTING MOTOR

REF. NO.	PART NO.	DESCRIPTION	BHX2					REMARKS
1	BFD–81890–00	MOTOR ASSY	1					
2	28P–81826–00	.BOLT	2					
3	3TB–81847–00	..O-RING	3					
4	4B5–81840–00	.BRUSH HOLDER ASSY	1					
5	3TB–81847–00	..O-RING	1					
6	4XV–8182A–00	.NUT	1					
7	1FK–81847–00	.O-RING	1					
8	11H–81844–00	.GASKET	2					
9	B7N–81815–10	CORD, STARTER MOTOR	1					
10	4B5–81871–00	.CAP	1					
11	4XV–8182A–00	NUT	1					
12	90110–06388	BOLT, HEXAGON SOCKET HEAD	2					

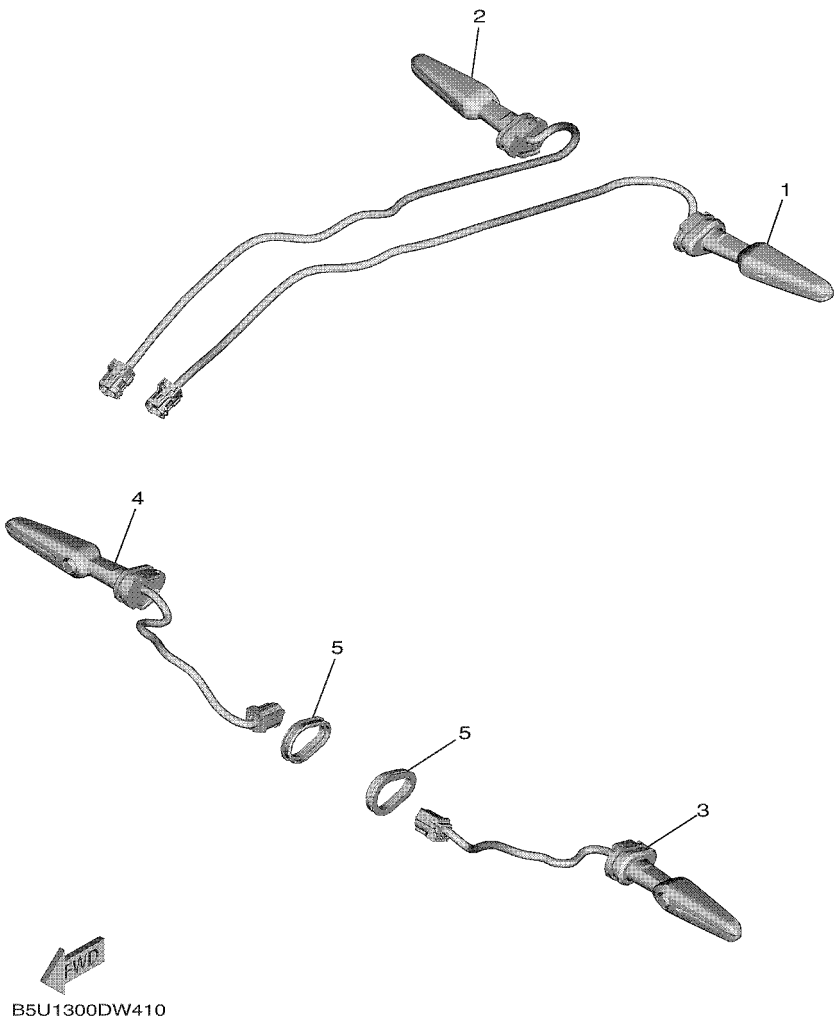

FIG. 42 FLASHER LIGHT

REF. NO.	PART NO.	DESCRIPTION	BHX2					REMARKS
1	B7N–83330–00	REAR FLASHER LIGHT ASSY 1	1					
2	B7N–83340–00	REAR FLASHER LIGHT ASSY 2	1					
3	B7N–83310–00	FRONT FLASHER LIGHT ASSY 1	1					
4	B7N–83320–00	FRONT FLASHER LIGHT ASSY 2	1					
5	B7N–83321–00	DAMPER, FLASHER 1	2					

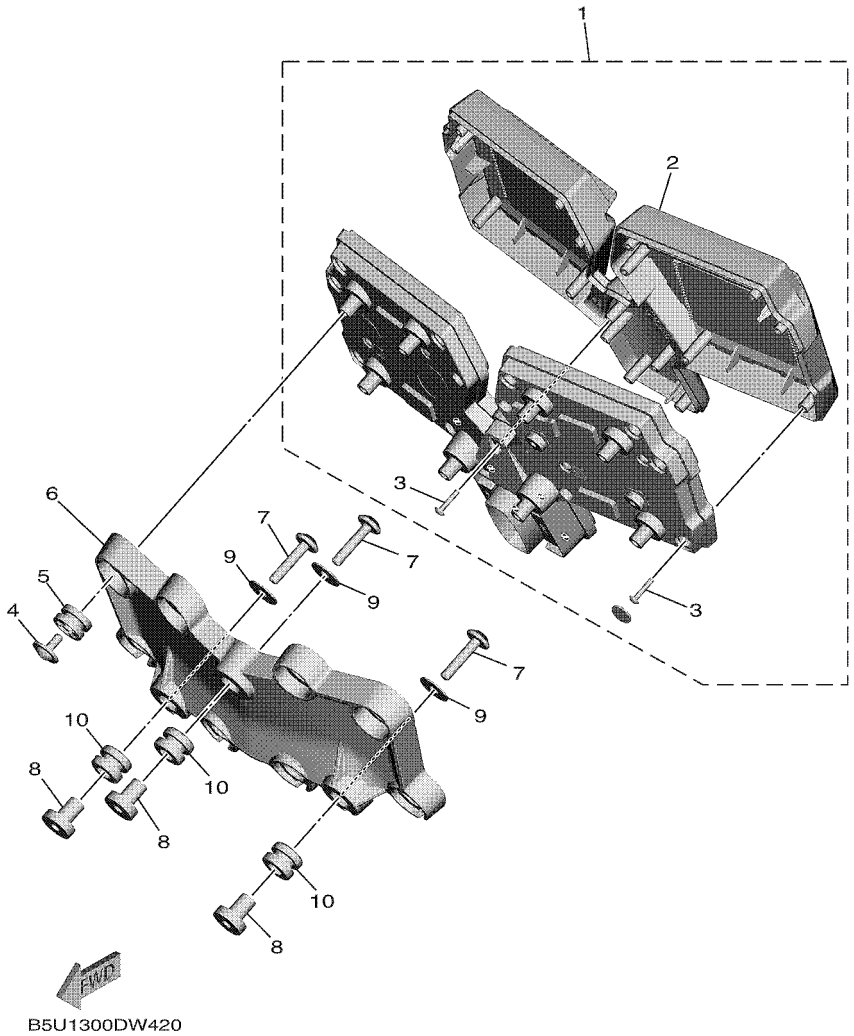

FIG. 43 METER

REF. NO.	PART NO.	DESCRIPTION	BHX2					REMARKS
1	BAP–83500–00	METER ASSY (KM/H)	1					
2	B5U–8353E–00	.CASE, METER UPPER	1					
3	97702–30016	.SCREW,TAPPING	17					
4	90164–05014	SCREW, TAPPING	8					
5	4XV–83513–00	DAMPER	8					
6	B5U–83519–00	BRACKET, METER	1					
7	90111–06142	BOLT, HEXAGON SOCKET BUTTON	3					
8	90387–06357	COLLAR	3					
9	90201–06063	WASHER, PLATE	3					
10	90480–14102	GROMMET	3					

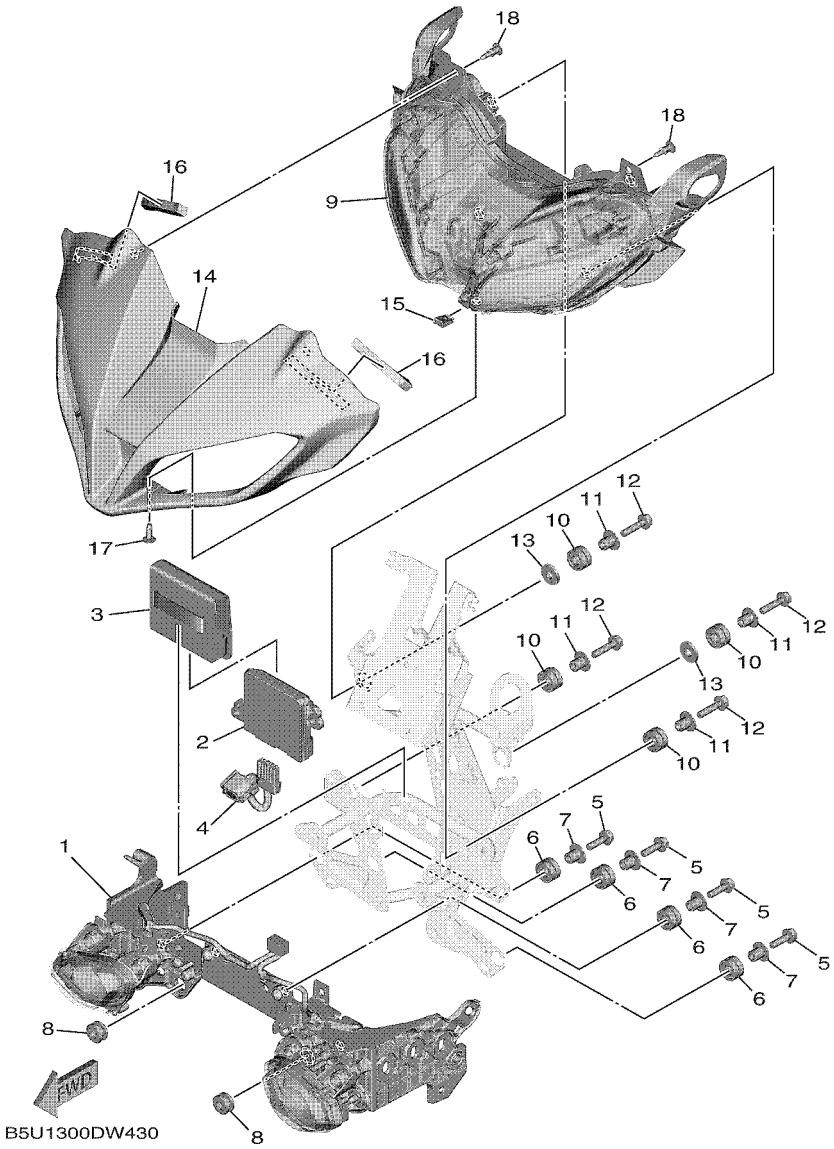

FIG. 44 HEADLIGHT

REF. NO.	PART NO.	DESCRIPTION	BHX2					REMARKS
1	B5U–84300–00	HEADLIGHT ASSY	1					
2	2PP–85490–00	LIGHT CONTROL UNIT	1					
3	B5U–83836–00	BAND	1					
4	B5U–82509–10	WIRE, SUB LEAD	1					
5	95822–06020	BOLT, FLANGE	4					
6	3C3–83513–00	DAMPER	4					
7	90387–065G0	COLLAR	4					
8	90480–12596	GROMMET	2					
9	BAP–84301–02	PILOT LIGHT ASSY 1	1					
10	3C3–83513–00	DAMPER	4					
11	90387–065G0	COLLAR	4					
12	95827–06025	BOLT, FLANGE	4					
13	90201–06103	WASHER, PLATE	2					
14	B5U–84369–01	COVER 1	1					
15	90183–05042	NUT, SPRING	1					
16	90520–10038	DAMPER, PLATE	2					
17	97702–50016	SCREW,TAPPING	1					
18	90269–06001	RIVET	2					

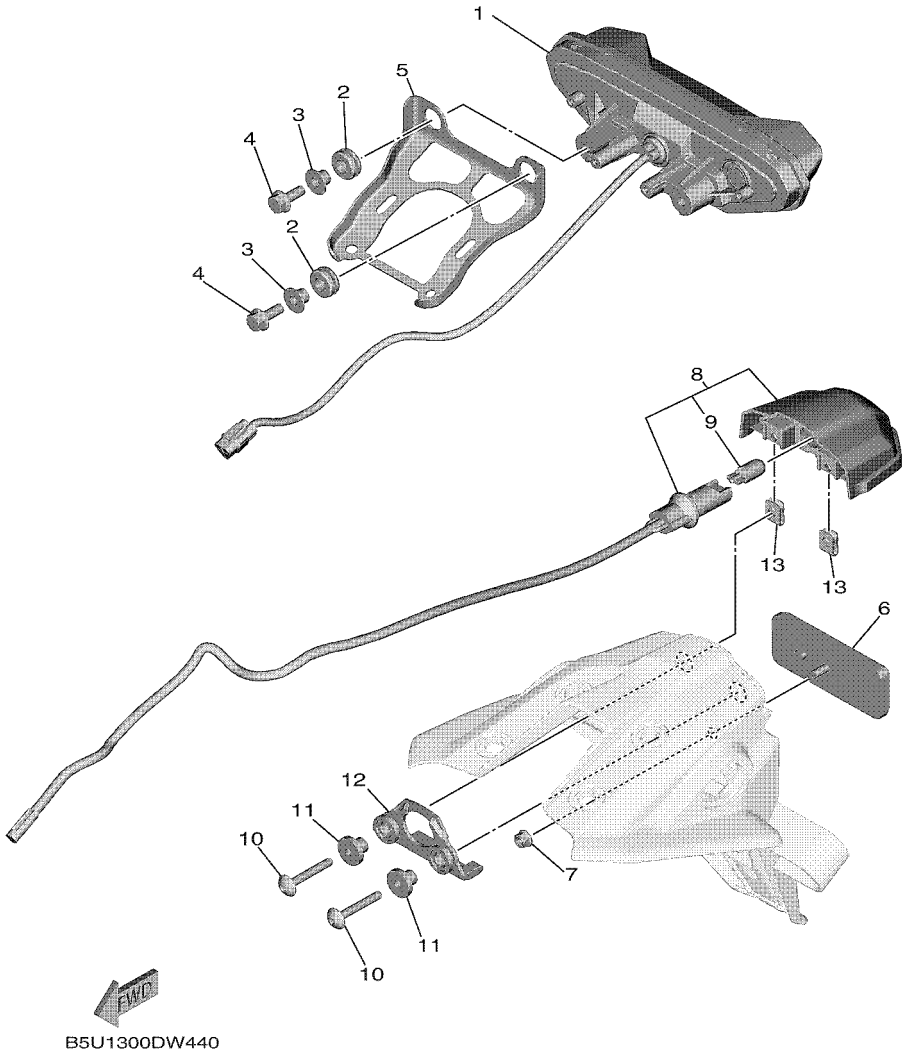

FIG. 45 TAILLIGHT

REF. NO.	PART NO.	DESCRIPTION	BHX2					REMARKS
1	B5U–84700–00	TAILLIGHT ASSY	1					
2	90480–13163	GROMMET	2					
3	90560–06201	SPACER	2					
4	95D32–06016	BOLT, FLANGE DEEP RECESS	2					
5	B5U–2117E–00	BRACKET, TAILLIGHT	1					
6	3Y6–85130–02	REAR REFLECTOR ASSY	1					
7	95602–05200	NUT, SELF-LOCKING	1					
8	B5U–84745–00	LICENCE LIGHT UNIT ASSY	1					
9	2DP–H4347–00	.BULB (12V-5W)	1					
10	90111–05026	BOLT, HEXAGON SOCKET BUTTON	2					
11	90387–05044	COLLAR	2					
12	B5U–21649–00	DAMPER	1					
13	90183–05076	NUT, SPRING	2					

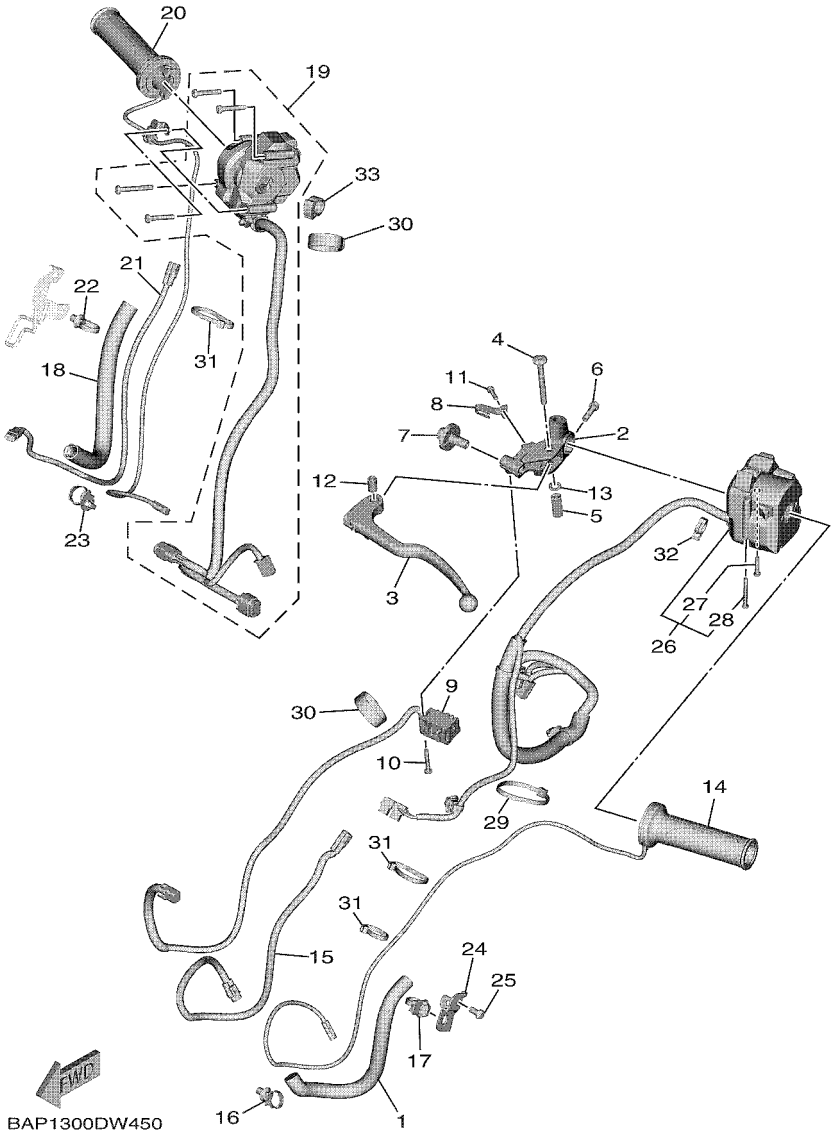

FIG. 46 HANDLE SWITCH & LEVER

REF. NO.	PART NO.	DESCRIPTION	BHX2					REMARKS
1	BAP–82351–00	TUBE, CORD	1					
2	B67–82911–00	HOLDER, LEVER 1	1					
3	BAM–83912–00	LEVER 1	1					
4	B5U–83945–00	BOLT, LEVER	1					
5	90170–06017	NUT	1					
6	95027–06020	BOLT, FLANGE	1					
7	5LV–83951–00	BOLT, CABLE ADJUSTING	1					
8	4XV–83929–00	PLATE, SPRING	1					
9	BAP–82917–00	SWITCH	1					
10	90159–04011	SCREW, WITH WASHER	1					
11	98507–04010	SCREW, PAN HEAD	1					
12	5JJ–83913–00	COLLAR, LEVER 1	1					
13	5LP–84127–10	WASHER, SPECIAL	1					
14	BAP–82963–00	GRIP, WARMER (LEFT)	1					
15	BAP–8253R–00	WIRE, LEAD 1	1					
16	90464–30010	CLAMP	1					
17	90464–25009	CLAMP	1					
18	BAP–82352–00	TUBE, CORD 2	1					
19	BAP–8291R–10	SW., HANDLE RH	1					
20	BAP–82960–10	GRIP, WARMER	1					
21	BAP–8253T–00	WIRE, LEAD 2	1					
22	90464–30010	CLAMP	1					
23	90464–25009	CLAMP	1					
24	BLG–23857–00	HOLDER	1					
25	92017–06012	BOLT, BUTTON HEAD	1					
26	B5U–83954–01	SWITCH, HANDLE 7	1					
27	98507–04020	.SCREW, PAN HEAD	1					

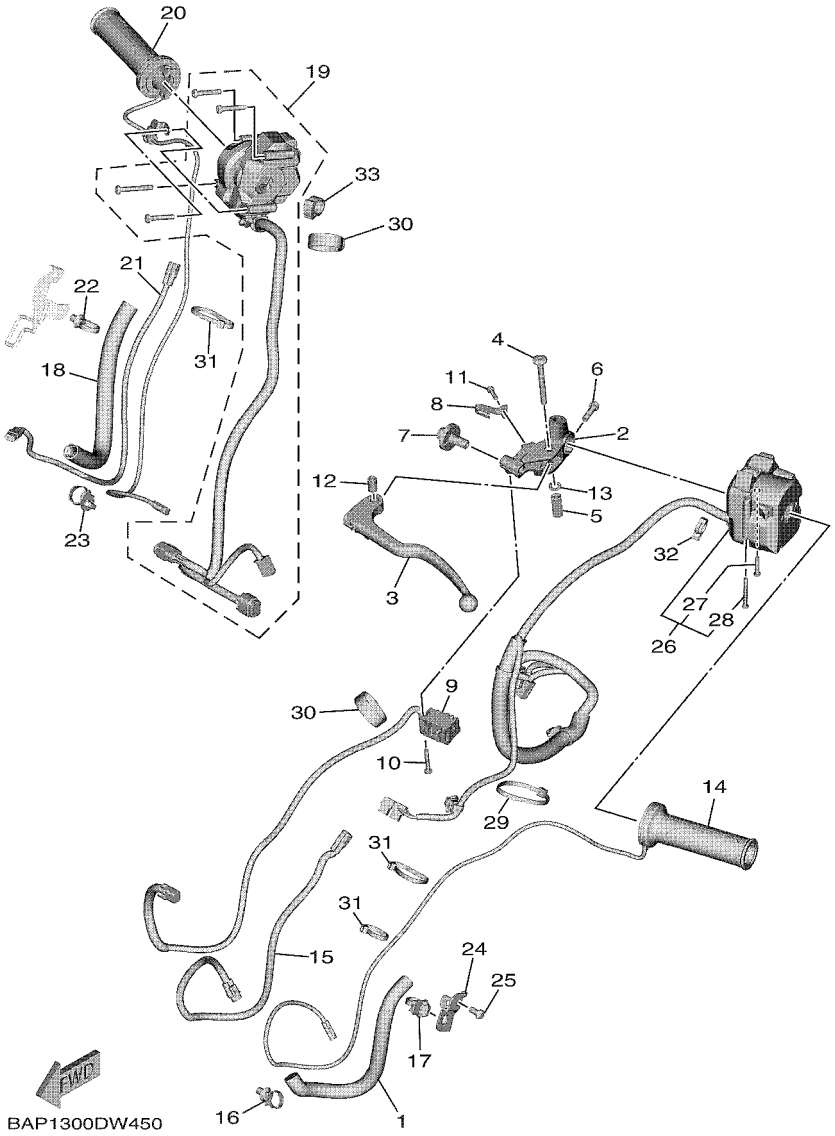

FIG. 46 HANDLE SWITCH & LEVER

REF. NO.	PART NO.	DESCRIPTION	BHX2					REMARKS
28	98507–04035	.SCREW, PAN HEAD	1					
29	3MA–82591–00	BAND	1					
30	B5U–82591–00	BAND	2					
31	1UA–82591–00	BAND	3					
32	90464–12013	CLAMP	1					
33	90464–16003	CLAMP	1					

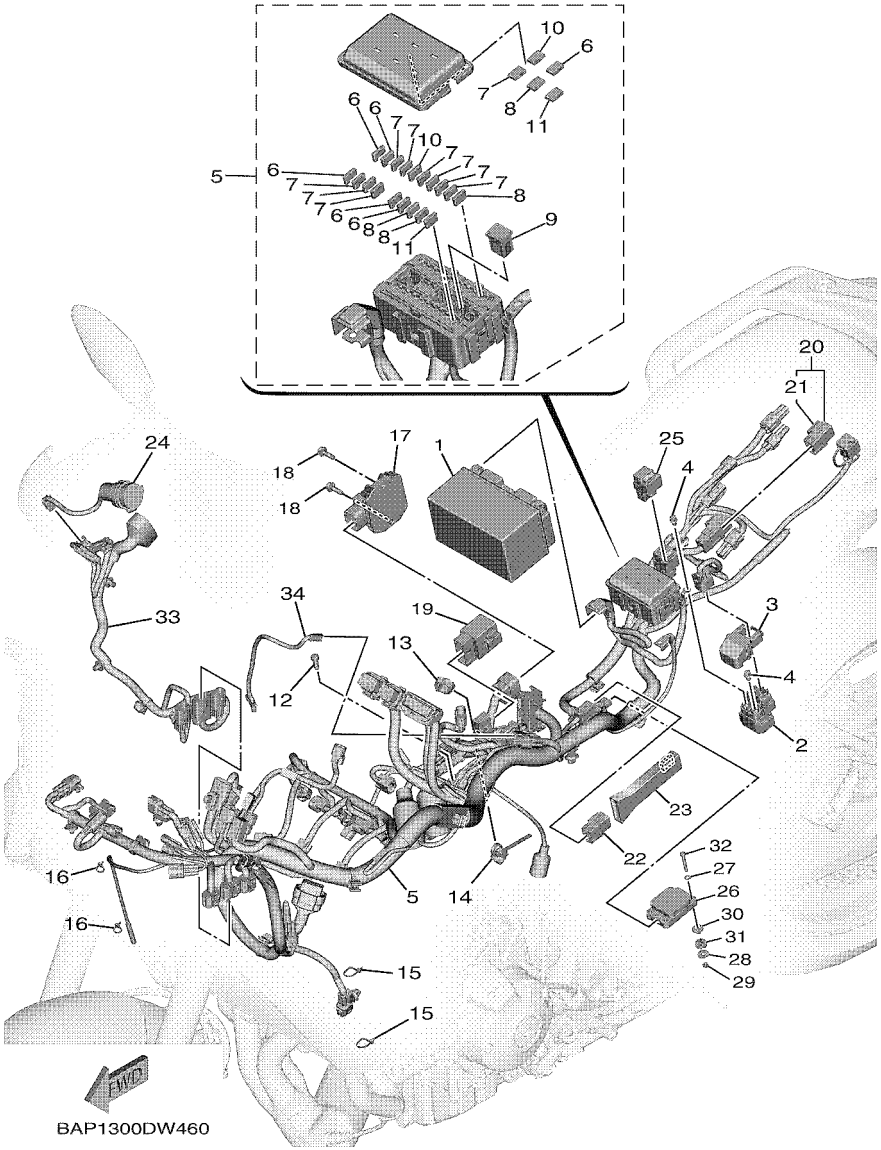

FIG. 47 ELECTRICAL 1

REF. NO.	PART NO.	DESCRIPTION	BHX2					REMARKS
1	5VY–82100–00	BATTERY ASSY (YUASA YTZ10S)	1					
2	B7N–81940–00	STARTER RELAY ASSY	1					
3	5SL–82119–30	COVER, LEAD WIRE	1					
4	90105–06230	BOLT, FLANGE	2					
5	BAP–82590–01	WIRE HARNESS ASSY	1					
6	B7N–82151–80	.FUSE (2A)	6					
7	B7N–82151–00	.FUSE (7.5A)	10					
8	B7N–82151–10	.FUSE (15A)	4					
9	B7N–82151–B1	.FUSE (50A)	1					
10	B7N–82151–30	.FUSE (10A)	2					
11	B7N–82151–60	.FUSE (30A)	2					
12	91312–06016	BOLT, HEXAGON SOCKET HEAD	1					
13	90464–16003	CLAMP	1					
14	90464–25009	CLAMP	1					
15	90465–10098	CLAMP	2					
16	90465–10098	CLAMP	2					
17	2CR–81960–00	RECTIFIER & REGULATOR ASSY	1					
18	95D37–06020	BOLT, FLANGE DEEP RECESS	2					
19	5VK–81950–41	RELAY ASSY (5VK-41)	1					
20	1ST–81950–00	RELAY ASSY (1ST-00)	1					
21	5JJ–81952–00	.HOLDER, RELAY	1					
22	5UM–81950–E0	RELAY ASSY (5UM-E0)	1					
23	B5U–82599–00	COVER, CONNECTOR	1					
24	B5U–8254B–00	TERMINAL COMP.	1					
25	5DM–81950–01	RELAY ASSY (G8HN-1C4T-DJ-Y52)	1					
26	B7N–8593A–00	INERTIAL MEASURE, UNIT ASSY	1					
27	92902–04600	WASHER, PLATE	4					

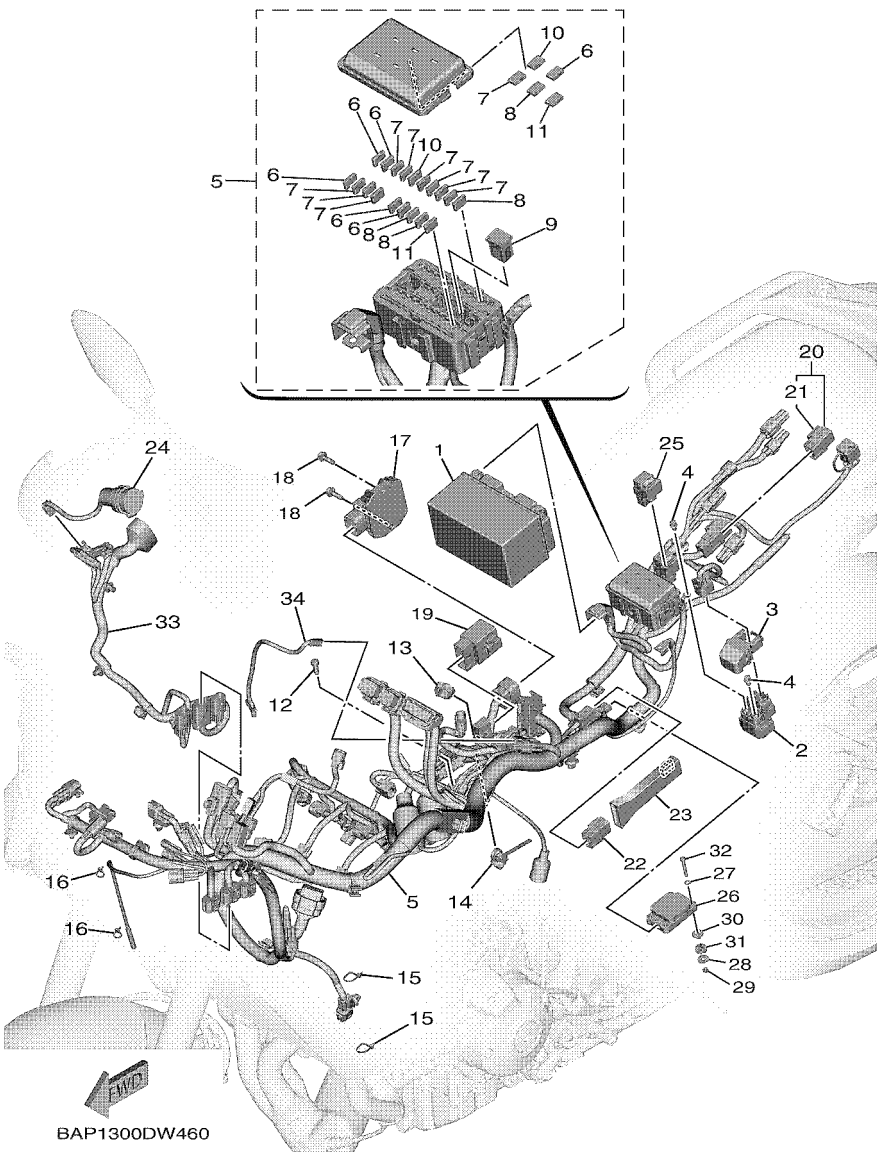

FIG. 47 ELECTRICAL 1

REF. NO.	PART NO.	DESCRIPTION	BHX2					REMARKS
28	90201–04034	WASHER, PLATE	4					
29	95607–04100	NUT, U	4					
30	B7N–83522–00	COLLAR	4					
31	B7N–8A8D0–00	GROMMET	4					
32	91317–04030	BOLT, HEXAGON SOCKET HEAD	4					
33	B5U–82509–00	WIRE, SUB LEAD	1					
34	BAP–82509–30	WIRE, SUB LEAD	1					

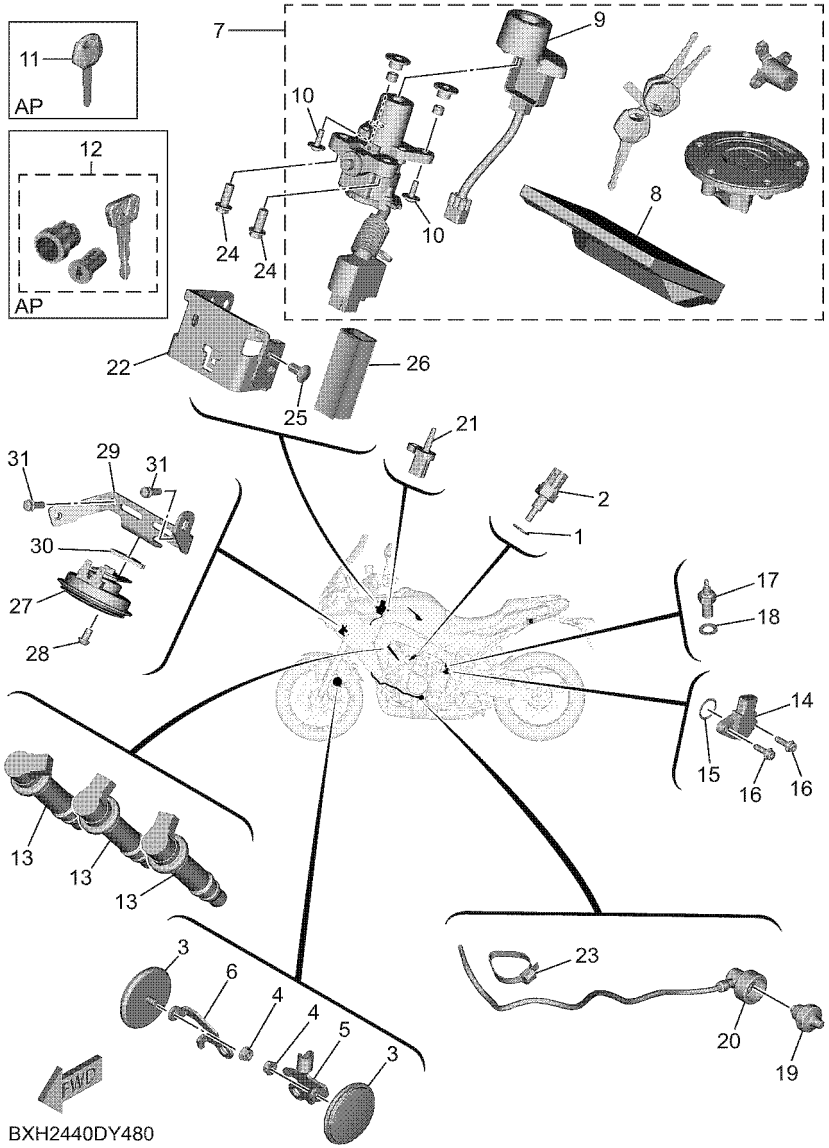

FIG. 48 ELECTRICAL 2

REF. NO.	PART NO.	DESCRIPTION	BHX2					REMARKS
1	90430–10004	GASKET	1					
2	4P9–83591–00	THERMO UNIT	1					
3	4AG–85111–00	REFLECTOR, FRONT 1	2					
4	95702–06500	NUT, FLANGE	2					
5	B7N–85112–00	BRACKET, REFLECTOR 1	1					
6	B7N–85122–00	BRACKET, REFLECTOR 2	1					
7	BAP–W8250–20	MAIN SW. IMMOBILIZER KIT	1					
8	BAP–8591A–20	.ENGINE CONTROL UNIT ASSY	1					
9	B7N–8255P–00	.IMMOBILIZER. UNIT COMP.	1					
10	5SL–82113–01	.SCREW	2					
11	5SL–82511–08	BLANK KEY	1					AP
12	BAP–W217P–00	LOCK ASSY	1					
13	1WS–82310–00	IGNITION COIL ASSY	3					
14	2CR–85899–10	SENSOR, GEAR POSITION	1					
15	93210–17008	O-RING	1					
16	90110–05067	BOLT, HEXAGON SOCKET HEAD	2					
17	3GB–82540–01	NEUTRAL SWITCH ASSY	1					
18	90430–10148	GASKET	1					
19	1WS–82504–00	OIL PRESSURE SWITCH ASSY	1					
20	B3L–82509–11	WIRE, SUB LEAD	1					
21	5YU–85886–00	SENSOR, AIR TEMPERATURE	1					
22	B7N–82599–01	COVER, CONNECTOR	1					
23	90464–13073	CLAMP	1					(125.0x7.0)
24	90105–081A1	BOLT, FLANGE	2					
25	90269–07015	RIVET	1					
26	B7N–82589–01	PROTECTER, WIRE HARNESS	1					
27	B7N–83371–00	HORN	1					

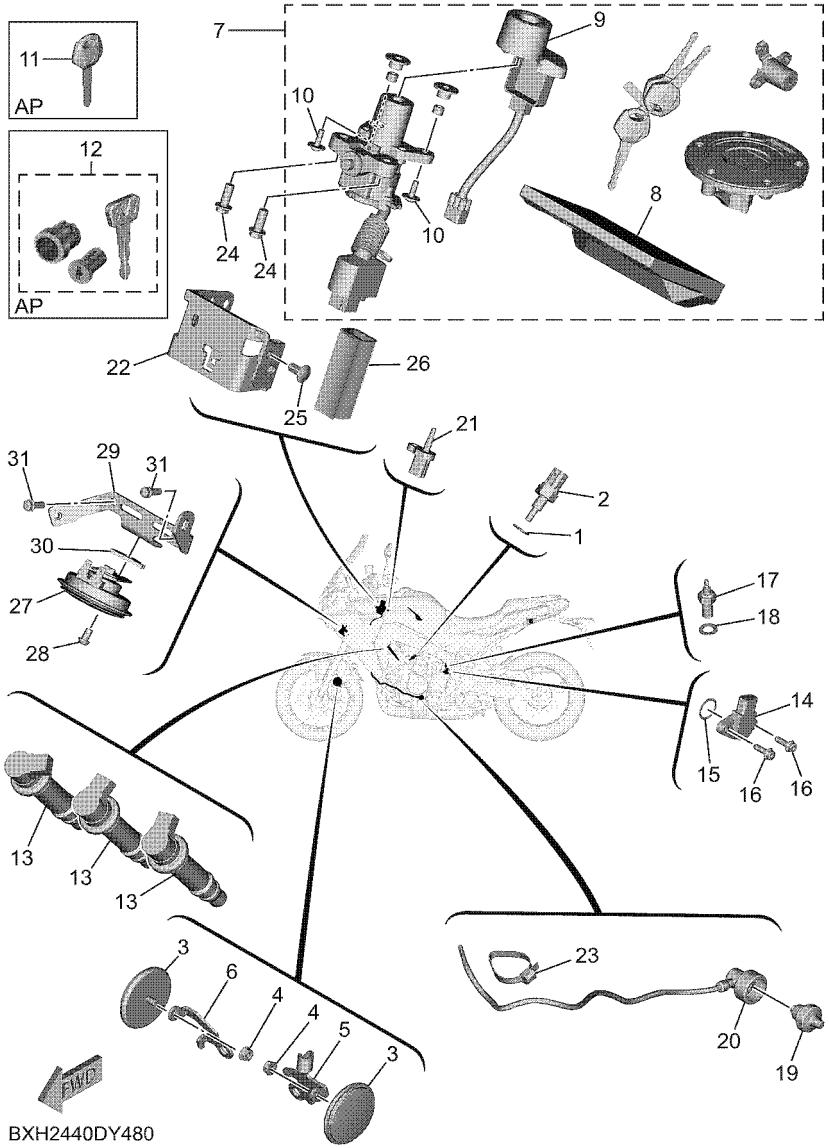

FIG. 48 ELECTRICAL 2

REF. NO.	PART NO.	DESCRIPTION	BHX2					REMARKS
28	92017–06014	BOLT, BUTTON HEAD	1					
29	B5U–23377–00	BRACKET, HORN	1					
30	B5U–8331M–00	HOLDER	1					
31	95027–06016	BOLT, FLANGE	2					

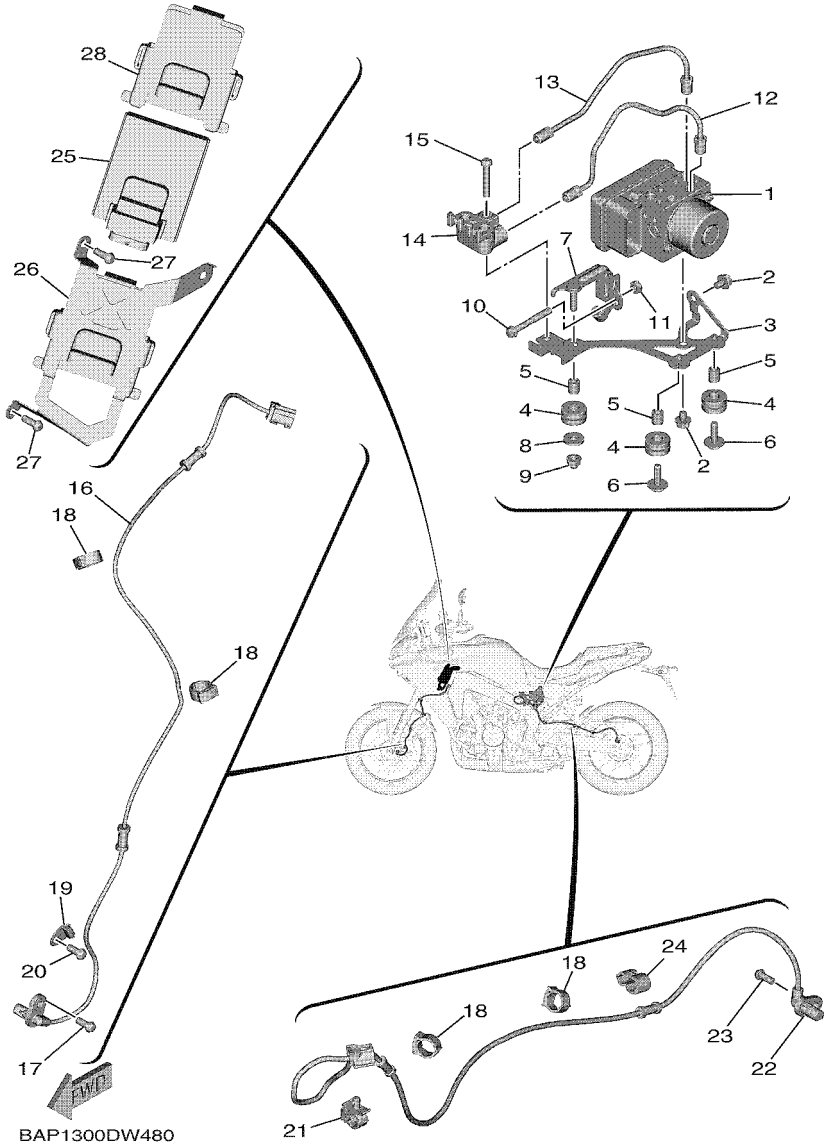

FIG. 49 ELECTRICAL 3

REF. NO.	PART NO.	DESCRIPTION	BHX2					REMARKS
1	B5U–85930–09	HYDRAULIC UNIT ASSY	1					
2	95822–06008	BOLT, FLANGE	2					
3	B7N–85991–00	BRACKET, UNIT	1					
4	90480–14229	GROMMET	3					
5	90387–065L7	COLLAR	3					
6	90119–06267	BOLT, WITH WASHER	2					
7	B7N–85542–00	BRACKET	1					
8	90201–06778	WASHER, PLATE	1					
9	90176–06065	NUT, CAP	1					
10	95027–06045	BOLT, FLANGE	1					
11	95607–06100	NUT, SELF-LOCKING	1					
12	B7N–25871–00	PIPE, BRAKE	1					
13	B7N–25882–00	PIPE, BRAKE 2	1					
14	B7N–25885–00	JOINT	1					
15	92012–06035	BOLT, BUTTON HEAD	1					
16	B7N–85970–00	WHEEL SENSOR ASSY, FRONT	1					
17	92017–06014	BOLT, BUTTON HEAD	1					
18	90464–16003	CLAMP	4					
19	2CR–23317–00	HOLDER, CABLE	1					
20	92017–06014	BOLT, BUTTON HEAD	1					
21	90464–14013	CLAMP	1					
22	B5U–85980–00	WHEEL SENSOR ASSY, REAR	1					
23	92014–06014	BOLT, BUTTON HEAD	1					
24	90464–10233	CLAMP	1					
25	BAP–85902–05	SUSPENSION CONTROL UNIT ASSY	1					
26	BAP–2161A–00	BRACKET 3	1					
27	92017–06016	BOLT, BUTTON HEAD	2					

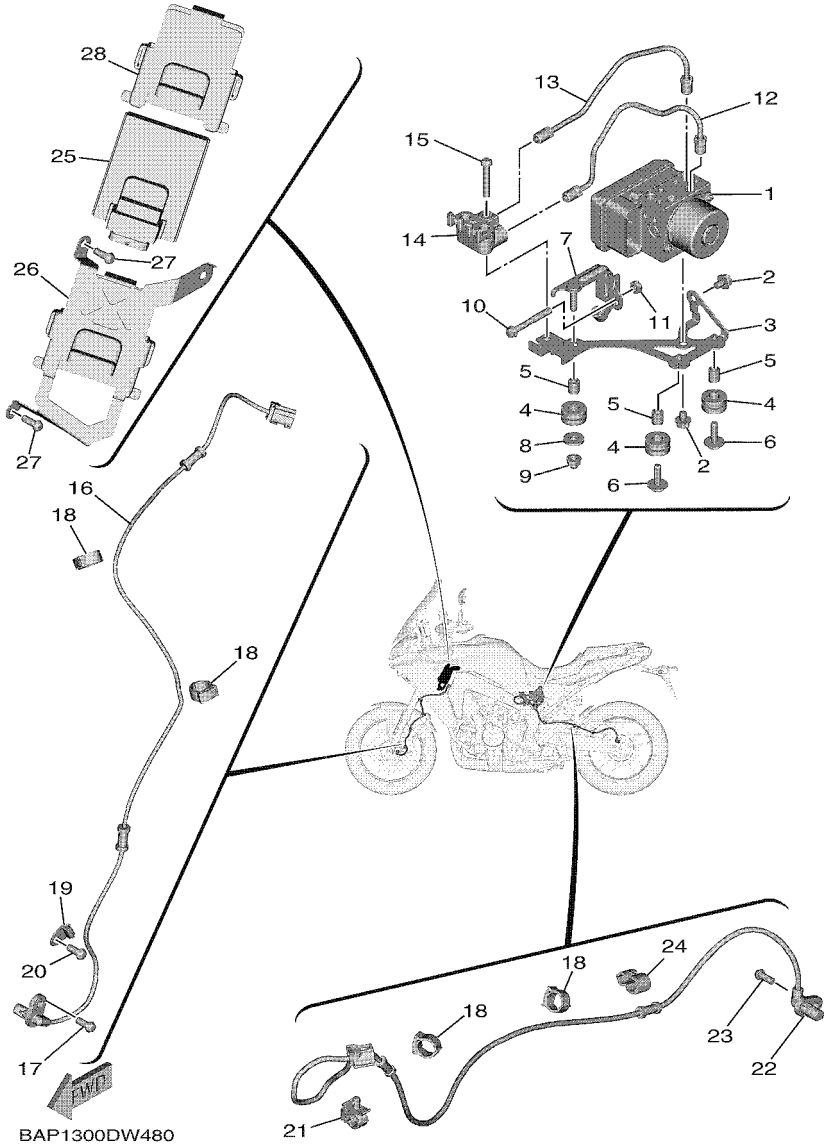

FIG. 49 ELECTRICAL 3

REF. NO.	PART NO.	DESCRIPTION	BHX2					REMARKS
28	BAP–21646–00	BAND	1					

PART NO.	REF. NO.
B7N–11101–09	2 – 1
5VY–1111G–00	2 – 11
	2 – 20
	2 – 22
2C0–11133–11	2 – 2
B7N–11165–00	2 – 16
B7N–11169–00	2 – 17
B7N–11181–00	2 – 12
B7N–11191–00	2 – 13
B7N–11193–00	2 – 15
214–11198–01	9 – 5
B7N–11400–00	3 – 1
2S3–11413–00	3 – 14
2S3–11413–10	3 – 14
2S3–11413–20	3 – 14
2S3–11413–30	3 – 14
2S3–11413–40	3 – 14
B7N–11416–00	3 – 5
B7N–11416–10	3 – 5
B7N–11416–20	3 – 5
B7N–11416–30	3 – 5
B7N–11416–A0	3 – 5
1RC–11500–01	3 – 13
B7N–11603–00	3 – 7
B7N–11631–00	3 – 6
39P–11633–00	3 – 8
B7N–11650–00	3 – 2
1RC–11654–00	3 – 3
1RC–11656–00	3 – 4
1RC–11656–10	3 – 4
1RC–11656–20	3 – 4
1RC–11656–30	3 – 4
1RC–12111–01	4 – 1
1RC–12113–00	4 – 4
BEA–12114–00	4 – 5
3D7–12116–00	4 – 3
3D7–12117–00	4 – 6
1WG–12118–00	4 – 7
2HC–12119–00	4 – 8
1RC–12121–01	4 – 2
B4T–12153–00	4 – 10
B4T–12153–09	4 – 10
1HX–12168–F0	4 – 9
1HX–12168–H1	4 – 9
1HX–12168–K1	4 – 9
1HX–12168–M1	4 – 9
1HX–12168–R1	4 – 9
1HX–12168–U1	4 – 9

PART NO.	REF. NO.
1HX–12168–W1	4 – 9
1HX–12168–Y1	4 – 9
1HX–12169–11	4 – 9
1HX–12169–31	4 – 9
1HX–12169–50	4 – 9
1HX–12169–70	4 – 9
1HX–12169–90	4 – 9
1HX–12169–E0	4 – 9
1HX–12169–G0	4 – 9
1HX–12169–J0	4 – 9
1HX–12169–L0	4 – 9
1HX–12169–N0	4 – 9
1HX–12169–T0	4 – 9
B7N–12170–00	5 – 1
B7N–12176–00	5 – 3
B7N–12180–00	5 – 2
B7N–12210–01	5 – 6
14B–12213–00	5 – 7
5BE–12241–01	2 – 14
B7N–12250–00	5 – 10
1RC–12251–00	5 – 9
B7N–12405–00	7 – 2
B7N–12410–00	6 – 21
B7N–12420–00	6 – 1
B7N–12422–00	6 – 3
5VK–12438–00	6 – 7
1RC–12439–00	6 – 11
B7N–1243A–00	7 – 21
B5U–1244E–00	7 – 5
B5U–1244F–00	7 – 7
1RC–12450–10	6 – 2
1RC–12459–00	6 – 4
B7N–12461–00	7 – 1
5SL–12462–00	7 – 12
B7N–12467–00	7 – 8
1RC–12469–00	6 – 23
1RC–12564–00	14 – 7
B7N–12576–00	6 – 35
1RC–12577–00	6 – 18
BS2–12578–00	6 – 26
BS2–12579–00	6 – 29
B7N–12588–00	6 – 32
B7N–12638–00	7 – 13
5GJ–12675–00	7 – 3
5VY–13117–10	8 – 8
B7N–1316E–00	8 – 11
1RC–1319L–10	6 – 8
B7N–13300–00	8 – 1

PART NO.	REF. NO.
1RC–13355–00	8 – 2
B7N–13400–01	9 – 3
B7N–13410–00	8 – 5
B7N–13414–00	9 – 6
5GH–13440–61	1 – 2
	9 – 2
BS2–13470–10	9 – 8
2HC–13473–00	9 – 9
68V–13533–00	10 – 7
B7N–13542–00	10 – 22
8FP–13556–00	10 – 4
8GL–13571–00	10 – 12
8HG–13573–00	10 – 11
B7N–13635–00	11 – 1
B7N–13636–00	11 – 3
B7N–13750–02	10 – 1
B7N–13761–00	10 – 2
B5U–13907–10	27 – 13
B7N–13930–00	10 – 8
B7N–13971–00	27 – 17
2C0–14105–00	10 – 16
8A7–14139–00	10 – 6
5PS–14147–00	10 – 3
895–14169–00	10 – 5
2C0–14216–00	10 – 10
8CC–14216–10	10 – 15
3XV–14251–00	10 – 19
5FL–14348–00	10 – 17
5FL–14348–10	10 – 20
8FP–14349–00	10 – 18
B7N–14402–01	11 – 7
B7N–14411–01	11 – 6
B7N–14425–00	11 – 19
B7N–14426–01	11 – 20
1WS–1443E–00	11 – 17
B7N–1443J–00	10 – 29
B7N–14451–01	1 – 3
	11 – 8
14B–14452–00	11 – 9
B7N–14453–00	11 – 11
B7N–14454–00	11 – 13
B7N–14463–00	11 – 12
8HG–14534–00	10 – 13
4FM–14613–00	12 – 4
B7N–14710–02	12 – 1
B7N–14867–00	14 – 16
B7N–14868–00	14 – 17
B7N–14869–00	14 – 18

PART NO.	REF. NO.
B7N–15100–09	13 – 1
B7N–15138–00	13 – 4
5EB–15155–00	13 – 2
23P–15156–00	13 – 10
B7N–15163–00	17 – 2
36Y–15189–00	13 – 22
B7N–15199–00	14 – 15
2CR–15319–01	13 – 19
2H7–15361–00	13 – 18
5GJ–15363–10	14 – 25
B7N–15377–00	13 – 28
B7N–15381–00	17 – 15
B7N–15393–00	11 – 21
B7N–15411–00	14 – 1
B7N–15416–00	14 – 27
B7N–15418–00	13 – 29
B7N–15421–00	14 – 19
B7N–15441–00	13 – 26
BD5–15451–00	14 – 6
B7N–15456–00	14 – 28
B7N–15461–00	16 – 34
1RC–15484–00	14 – 13
B5Y–1548B–00	14 – 31
B7N–15499–00	14 – 23
1RC–15512–10	15 – 1
1RC–15515–10	15 – 5
5EB–15521–00	15 – 2
1RC–15590–00	15 – 3
B7N–15789–00	14 – 24
B7N–16150–00	16 – 1
363–16154–00	16 – 2
2C0–16164–00	16 – 26
B7N–16164–00	16 – 25
B7N–16173–00	16 – 9
1RC–16181–00	16 – 27
B7N–16321–00	16 – 4
1TD–16324–00	16 – 7
BR9–16324–00	16 – 14
	16 – 15
4B1–16325–00	16 – 14
	16 – 15
5VY–16325–00	16 – 6
	16 – 14
	16 – 15
B90–16331–00	16 – 5
2CR–16337–00	16 – 11
1RC–16340–00	16 – 21
132–16346–00	19 – 2

PART NO.	REF. NO.
B7N–16350–00	16 – 8
B90–16352–00	16 – 10
B7N–16356–00	16 – 20
B7N–16371–00	16 – 3
5VY–16382–10	16 – 30
1TD–16383–01	16 – 12
1TD–16384–00	16 – 13
B7N–17121–01	17 – 13
B7N–17131–01	17 – 8
B7N–17151–01	17 – 5
B7N–17161–01	17 – 10
B7N–17211–01	17 – 34
B7N–17221–01	17 – 23
B7N–17231–01	17 – 31
B7N–17241–01	17 – 28
B7N–17251–01	17 – 32
B7N–17261–01	17 – 26
B7N–17411–01	17 – 1
B7N–17414–00	17 – 38
B7N–17421–01	17 – 18
2CR–17460–00	32 – 28
B7N–18101–00	19 – 8
B7N–18111–00	19 – 17
B7N–18112–00	19 – 14
5EB–18113–00	19 – 18
B7N–18115–00	19 – 23
BAP–18115–00	24 – 2
5LV–18116–00	19 – 28
5VX–18116–00	24 – 4
5LV–18117–00	19 – 20
1D7–18127–00	19 – 4
B7N–18140–00	19 – 11
B7N–18143–00	19 – 1
4XV–18154–00	19 – 19
	19 – 30
5VX–18154–00	24 – 6
B7N–18175–00	19 – 10
1RC–18511–00	18 – 2
1RC–18512–00	18 – 3
1RC–18513–00	18 – 4
B7N–18531–00	18 – 5
B7N–18535–00	18 – 6
B7N–18536–00	18 – 8
B7N–18540–01	18 – 1
B7N–18562–00	18 – 9
B5U–2111B–09	20 – 1
B5U–2117E–00	45 – 5
B7N–2117F–00	20 – 29

PART NO.	REF. NO.
B7N–2117M–00	20 – 30
B5U–21190–09	20 – 2
5VX–21289–00	20 – 27
B5U–21315–00	20 – 19
B5U–21316–00	20 – 20
B7N–2135F–00	21 – 10
B7N–2137F–00	20 – 22
B5U–2137G–00	20 – 25
2C0–21414–00	20 – 8
5VY–21424–00	20 – 9
B7N–2144G–00	36 – 38
4C8–21495–00	20 – 18
B7N–21511–00–33	21 – 1
B7N–21511–00–P7	21 – 1
4C8–21568–11	28 – 50
B5U–2160E–01	21 – 14
B7N–2160F–00	21 – 12
BAP–2161A–00	49 – 26
B7N–21629–00	21 – 22
B7N–2163A–00	21 – 36
2PP–2163E–01	21 – 26
BAP–21646–00	49 – 28
B5U–21649–00	45 – 12
B7N–21649–00	21 – 11
B5U–2164F–00	21 – 25
B5U–21650–01	23 – 13
B5U–21651–01	21 – 38
BM6–21668–00	23 – 39
B7N–21682–00	21 – 28
B7N–21688–00	21 – 20
B5U–21711–00–P3	22 – 1
B5U–21711–00–P4	22 – 1
B5U–2171A–00	22 – 28
BAP–2171E–00	22 – 31
BAP–2171X–00	22 – 33
B5U–21721–00–P3	22 – 7
B5U–21721–00–P4	22 – 7
1RC–2172W–00	7 – 31
B5U–21731–00	22 – 13
B5U–21741–00	22 – 21
1RC–21748–00	7 – 38
17D–21749–00	22 – 17
	22 – 24
1RC–21749–00	7 – 35
B7N–21816–00	7 – 30
B7N–21826–00	7 – 27
1RC–21828–00	7 – 26
1RC–21871–00	7 – 24

PART NO.	REF. NO.
B7N–21875–00	7 – 25
BAP–21880–00	21 – 32
BAP–21890–00	21 – 33
B5U–22110–00	23 – 1
5VY–22128–00	23 – 5
BAP–22130–00	24 – 1
B7N–22141–00	23 – 33
B5U–22151–00	23 – 9
BAP–2216B–00	24 – 12
BAM–2216C–00	24 – 10
B5U–2217A–00	23 – 22
B7N–2217M–00	23 – 25
BAP–22210–02	24 – 7
BC3–2247A–00	36 – 63
B5U–22538–00	23 – 18
B7N–22825–00	7 – 29
BAP–23102–00	26 – 19
BAP–23103–00	26 – 1
BAP–23110–00	26 – 21
BAP–23111–00	26 – 16
	26 – 34
BAP–23117–00	26 – 14
	26 – 32
BAP–23120–00	26 – 3
4KM–23123–01	26 – 40
1RC–23125–00	26 – 8
	26 – 26
B5U–23126–10	26 – 2
	26 – 20
BAP–23141–00	26 – 13
	26 – 31
4EB–23144–00	26 – 4
	26 – 22
4EB–23145–01	26 – 6
	26 – 24
36Y–23146–10	26 – 7
	26 – 25
39P–23147–00	26 – 17
	26 – 35
26H–23156–00	26 – 5
	26 – 23
509–23158–L0	26 – 11
	26 – 29
BAP–23170–00	26 – 28
BAP–23170–10	26 – 10
4FM–23171–40	26 – 9
	26 – 27
278–23181–50	26 – 12

PART NO.	REF. NO.
278–23181–50	26 – 30
BAP–23188–00	26 – 15
	26 – 33
2CR–23317–00	49 – 19
B5U–23340–00	26 – 36
B5U–23377–00	48 – 29
4XV–23415–01	25 – 2
4XV–23418–00	25 – 4
B7N–23435–00	25 – 8
B7N–23441–00	25 – 10
B7N–23442–00	25 – 12
3FV–23462–00	26 – 37
BLG–23857–00	46 – 24
B7N–23892–00	20 – 26
B5U–2411F–00	27 – 46
B5U–2411J–00	27 – 45
5PW–2411J–01	22 – 5
	22 – 11
	27 – 50
B5U–2411L–00	27 – 47
B5U–24129–00–P3	28 – 1
B5U–24129–00–P4	28 – 1
B5U–24139–00–P3	28 – 24
B5U–24139–00–P4	28 – 24
1RC–2413B–01	28 – 7
	28 – 30
B5U–2413Y–00	27 – 18
B5U–24141–00	27 – 40
B7N–24170–00	27 – 30
B5U–24181–00	27 – 43
B7N–24183–00	27 – 31
B7N–24191–00	27 – 2
B7N–24192–00	27 – 3
B7N–2419F–00	27 – 19
B5U–241B1–00	28 – 47
B5U–24216–00	27 – 49
B5U–24217–00	29 – 6
B7N–24313–00	27 – 32
B7N–24315–00	27 – 28
B7N–24316–00	27 – 34
B7N–24317–00	27 – 36
3D7–24339–00	27 – 20
68V–24376–00	10 – 21
1RC–24486–00	27 – 15
1RC–24491–00	27 – 14
B3L–24595–00	39 – 26
	39 – 27
39P–24602–10	27 – 10

PART NO.	REF. NO.
B5U–24662–00	27 – 23
B5U–24708–00	29 – 9
BAP–2470F–30	29 – 2
BAP–2470H–30	29 – 12
BAP–24710–30	29 – 1
B5U–2471P–00	29 – 21
2PP–24723–00	29 – 10
B5C–24741–00	29 – 5
BAP–24750–30	29 – 11
2PP–2475H–00	29 – 26
2PP–2475J–00	29 – 28
B5U–24773–09	20 – 3
3P6–24780–00	29 – 7
B5U–24780–00	29 – 18
2PP–2478X–01	29 – 14
B5C–24797–00	29 – 16
B5U–2479D–00	29 – 20
B5U–2479K–00	29 – 23
B5C–2479L–00	29 – 17
4XV–25117–00	30 – 2
B7N–25168–00–8L	30 – 1
1SD–2517G–00	31 – 3
2PW–2517G–00	33 – 3
4XV–25181–10	30 – 9
B7N–251G3–10	30 – 10
B7N–25338–00–8L	32 – 3
BD5–25364–00	32 – 9
2CR–25366–00	32 – 14
13S–25376–00	32 – 21
5EB–25377–00	32 – 13
B7N–2537W–10	32 – 18
4XV–25381–10	32 – 25
4XV–25388–00	32 – 23
4XV–25389–00	32 – 24
23P–25398–00	30 – 7
	32 – 12
B7N–25445–10	32 – 17
4SV–25802–00	31 – 8
	31 – 19
5SL–25802–00	33 – 6
4SV–25802–10	31 – 6
	31 – 17
5SL–25803–00	33 – 7
3GM–25803–10	31 – 7
	31 – 18
3MA–25803–10	31 – 9
	31 – 20
5SL–25805–00	1 – 4

PART NO.	REF. NO.
5SL–25805–00	31 – 10
	31 – 21
5VX–25806–00	1 – 5
	33 – 14
2CR–25807–00	35 – 2
56P–25808–50	37 – 6
B7N–2580A–00	35 – 1
1RC–2580T–00	31 – 5
1RC–2580U–00	31 – 16
B7N–2580W–00	33 – 5
B7N–2581J–00	37 – 25
B5U–2581K–00	37 – 24
1RC–2581T–00	31 – 1
1J3–25824–00	31 – 14
	31 – 25
8CR–25824–00	33 – 18
1UY–25824–51	35 – 7
306–25825–01	31 – 15
	31 – 26
1UY–25825–51	33 – 19
	35 – 8
5SL–25827–00	33 – 20
5SL–25827–10	33 – 21
5SL–25828–01	33 – 22
2D1–2582A–00	37 – 7
2VN–2582A–50	35 – 3
B5U–2582E–00	37 – 19
1RC–2582W–00	33 – 1
5SL–25838–00	33 – 9
56P–2583V–00	37 – 5
B5U–2584A–02	35 – 33
B7N–2584B–01	35 – 36
2C0–25852–00	37 – 12
3GM–25852–50	35 – 17
2VN–25854–00	37 – 13
3FV–25854–00	35 – 18
2CR–25855–00	35 – 19
2VN–25855–00	37 – 14
4BP–2585F–01	37 – 8
2VN–25866–00	35 – 5
B7N–25867–00	35 – 9
B7N–25871–00	49 – 12
B7N–25872–00	35 – 25
B5U–25875–00	35 – 34
B5U–2587A–00	35 – 31
B7N–25882–00	49 – 13
B7N–25885–00	49 – 14
14B–25894–00	37 – 11

PART NO.	REF. NO.
2CR–25894–00	35 – 16
B7N–25895–00	35 – 21
B5U–25895–50	37 – 18
3FV–2589A–00	35 – 6
2CR–2589F–00	35 – 12
2CR–2589G–00	35 – 20
3GM–2589H–00	35 – 23
5SL–25914–00	33 – 11
5DH–25916–50	33 – 16
3JD–25917–00	33 – 13
5SL–25917–00	33 – 8
13S–25919–00	31 – 11
	31 – 22
5SL–25919–00	33 – 10
B7N–25921–50	33 – 12
4SV–25924–00	31 – 12
	31 – 23
8CR–25924–00	33 – 15
3GM–25925–00	31 – 13
	31 – 24
1RC–25926–00	33 – 17
B5U–26021–00	34 – 12
B5U–26111–10	34 – 1
B7N–2612E–00	35 – 41
B7N–26132–00	7 – 17
5PS–26133–20	34 – 6
	34 – 8
B5U–26141–00	34 – 9
B5U–26142–00	34 – 10
B5U–26223–00	34 – 14
B5U–26224–00	34 – 16
B5U–2622A–00	34 – 15
B5U–2622E–00	34 – 17
B5U–26246–00	34 – 2
B5U–2624B–00	34 – 3
B7N–26280–00	34 – 5
B7N–26290–00	34 – 7
2C0–26326–00	37 – 16
B7N–26332–00	35 – 10
BLG–26335–00	34 – 4
B5U–27111–00	36 – 59
278–27114–00	29 – 4
36C–27114–00	36 – 61
371–27114–00	29 – 3
4GL–27114–00	29 – 13
B5U–27151–00	36 – 64
B5U–27152–00	36 – 66
B7N–27211–00	36 – 30

PART NO.	REF. NO.
4BP–27222–02	37 – 9
B7N–27311–00	36 – 1
B7N–27315–00	36 – 9
B5U–27321–00	36 – 2
BD5–27413–00	36 – 15
	36 – 24
B5U–2741L–00	36 – 41
B5U–2742L–00	36 – 49
B7N–27431–00	36 – 40
4C8–27434–00	19 – 32
4BP–27434–01	36 – 31
5VX–27437–00	36 – 44
	36 – 52
B7N–27441–00	36 – 48
B7N–27442–00	36 – 13
B7N–27443–00	36 – 22
B5U–27451–00	36 – 14
B5U–27461–00	36 – 23
BAP–274A3–00	36 – 55
BAP–28100–00	29 – 30
2H7–28151–00	29 – 31
2GV–28152–00	29 – 32
23P–28164–00	29 – 33
4KG–28186–11	29 – 34
B5C–28319–00	38 – 6
B5U–2831R–00	38 – 4
B5U–2831T–00	38 – 5
B5U–28345–00	28 – 15
B5U–28346–00	28 – 38
B5U–28356–01	38 – 17
B5C–2835B–00	38 – 11
B5U–2835J–00	39 – 15
B5U–2835U–00–P3	39 – 1
B5U–2835U–00–P4	39 – 1
B5U–2835V–00–P3	39 – 8
B5U–2835V–00–P4	39 – 8
B5U–2836K–00	39 – 3
B5U–2836L–00	39 – 10
B5U–2836M–01	38 – 20
B5C–2836T–00	38 – 14
B5C–2836X–00	38 – 9
13S–28371–00	39 – 21
B5C–28373–00	38 – 15
B5U–2837N–00	28 – 8
B5U–2837R–00	28 – 31
B5U–28381–00	38 – 1
B5C–28388–00	38 – 13
B5U–2838N–00	28 – 11

PART NO.	REF. NO.
B5U–2838R–00	28 – 34
BAP–28391–30	39 – 24
BAP–28391–40	39 – 24
BAP–28392–30	39 – 25
BAP–28392–40	39 – 25
2PP–2839B–11	39 – 22
	39 – 23
B5U–2842M–00	28 – 18
B5U–2842N–00	28 – 41
B7N–81410–00	40 – 2
1RC–81450–01	40 – 1
B7N–81815–10	41 – 9
28P–81826–00	41 – 2
4XV–8182A–00	41 – 6
	41 – 11
4B5–81840–00	41 – 4
11H–81844–00	41 – 8
1FK–81847–00	41 – 7
3TB–81847–00	41 – 3
	41 – 5
4B5–81871–00	41 – 10
BFD–81890–00	41 – 1
B7N–81940–00	47 – 2
1ST–81950–00	47 – 20
5DM–81950–01	47 – 25
5VK–81950–41	47 – 19
5UM–81950–E0	47 – 22
5JJ–81952–00	47 – 21
2CR–81960–00	47 – 17
5VY–82100–00	47 – 1
5SL–82113–01	48 – 10
5SL–82119–30	47 – 3
B7N–8212B–01	21 – 4
B7N–82137–00	21 – 17
B7N–82151–00	47 – 7
B7N–82151–10	47 – 8
B7N–82151–30	47 – 10
B7N–82151–60	47 – 11
B7N–82151–80	47 – 6
B7N–82151–B1	47 – 9
34D–82176–00	20 – 28
1WS–82310–00	48 – 13
BAP–82351–00	46 – 1
BAP–82352–00	46 – 18
1WS–82380–00	10 – 9
B7N–82480–10	19 – 25
1WS–82504–00	48 – 19
B5U–82509–00	47 – 33

PART NO.	REF. NO.
B5U–82509–10	44 – 4
B3L–82509–11	48 – 20
BAP–82509–30	47 – 34
5SL–82511–08	48 – 11
BAM–82530–00	36 – 37
BAP–8253R–00	46 – 15
BAP–8253T–00	46 – 21
3GB–82540–01	48 – 17
B5U–8254B–00	47 – 24
B7N–8255P–00	48 – 9
B7N–82566–00	36 – 10
B7N–82589–01	48 – 26
BAP–82590–01	47 – 5
1UA–82591–00	46 – 31
3MA–82591–00	46 – 29
B5U–82591–00	46 – 30
B5U–82591–10	35 – 45
B5U–82599–00	47 – 23
B7N–82599–01	48 – 22
B67–82911–00	46 – 2
BAP–82917–00	46 – 9
BAP–8291R–10	46 – 19
BAP–82960–10	46 – 20
BAP–82963–00	46 – 14
B7N–83310–00	42 – 3
B5U–8331M–00	48 – 30
B7N–83320–00	42 – 4
B7N–83321–00	42 – 5
B7N–83330–00	42 – 1
B7N–83340–00	42 – 2
B7N–83371–00	48 – 27
BAP–83500–00	43 – 1
3C3–83513–00	44 – 6
	44 – 10
4XV–83513–00	43 – 5
B5U–83519–00	43 – 6
B7N–83522–00	47 – 30
B5U–8353E–00	43 – 2
4P9–83591–00	48 – 2
B5U–83836–00	44 – 3
BAM–83912–00	46 – 3
5JJ–83913–00	46 – 12
BAM–83922–00	35 – 11
4XV–83929–00	46 – 8
B5U–83945–00	46 – 4
5LV–83951–00	46 – 7
B5U–83954–01	46 – 26
B5U–83980–00	35 – 14

PART NO.	REF. NO.
5LP–84127–10	46 – 13
B5U–84300–00	44 – 1
BAP–84301–02	44 – 9
B5U–84369–01	44 – 14
B5U–84700–00	45 – 1
B5U–84745–00	45 – 8
4AG–85111–00	48 – 3
B7N–85112–00	48 – 5
B7N–85122–00	48 – 6
3Y6–85130–02	45 – 6
B7N–85132–00	35 – 39
2PP–85490–00	44 – 2
B7N–85542–00	49 – 7
B3L–85885–01	10 – 14
5YU–85886–00	48 – 21
2CR–85899–10	48 – 14
BAP–85902–05	49 – 25
BAP–8591A–20	48 – 8
1WS–8592A–10	12 – 2
B5U–85930–09	49 – 1
B7N–8593A–00	47 – 26
B7N–85970–00	49 – 16
B5U–85980–00	49 – 22
BAP–85984–00	24 – 14
B7N–85991–00	49 – 3
B7N–86120–00	27 – 39
B7N–8A8D0–00	47 – 31
5YP–E2671–00	7 – 4
2DP–H4347–00	45 – 9
BAP–W001A–00	1 – 6
	32 – 31
B7N–W001G–00	16 – 35
B7N–W001M–00	16 – 36
BAP–W003B–00	26 – 41
BAP–W217P–00	48 – 12
2TV–W2470–00	29 – 22
BAP–W8250–20	48 – 7
B5U–YK241–00–P3	27 – 1
B5U–YK241–00–P4	27 – 1
90101–08013	23 – 19
90101–10034	36 – 3
90101–10042	24 – 19
90105–05014	27 – 51
90105–06027	2 – 3
90105–06057	29 – 27
90105–06066	8 – 3
90105–06187	35 – 40
	35 – 43

PART NO.	REF. NO.
90105–06202	13 – 15
90105–06230	47 – 4
90105–07006	5 – 4
90105–081A1	48 – 24
90105–10030	23 – 23
	23 – 37
90105–10189	36 – 12
90105–10211	23 – 30
90105–10334	36 – 65
	36 – 67
90105–10437	20 – 16
90105–10440	31 – 27
90105–10487	20 – 15
90105–10493	21 – 34
90105–12101	3 – 11
90109–06043	28 – 23
	28 – 46
	39 – 20
90109–06100	13 – 17
90109–061F7	2 – 8
90109–06271	2 – 21
90109–06293	2 – 10
90109–064G6	31 – 2
90109–066F0	2 – 19
90109–08045	33 – 2
90109–08170	12 – 7
90109–08247	20 – 23
90109–085E2	20 – 21
90109–086F8	36 – 19
	36 – 28
90109–10029	36 – 60
90110–05028	27 – 16
90110–05067	48 – 16
90110–05112	27 – 11
90110–06090	22 – 2
	22 – 8
90110–06164	9 – 10
90110–06168	11 – 5
	14 – 14
90110–06172	27 – 27
90110–06173	8 – 9
90110–06175	6 – 25
90110–06223	40 – 3
90110–06232	11 – 23
90110–06233	7 – 37
90110–06321	14 – 22
90110–06388	6 – 16
	14 – 10

PART NO.	REF. NO.
90110–06388	14 – 21
	41 – 12
90110–06389	14 – 11
90110–06390	9 – 7
90110–06394	6 – 15
	14 – 12
90110–06396	6 – 13
	14 – 29
90110–06431	13 – 27
90110–06432	8 – 4
90110–08220	36 – 21
	36 – 39
90110–08231	20 – 24
90110–08232	34 – 11
90110–10058	20 – 10
90110–10059	20 – 12
90111–05014	37 – 20
90111–05021	34 – 18
90111–05026	45 – 10
90111–05041	22 – 29
90111–05049	21 – 21
	39 – 6
	39 – 13
90111–05061	38 – 16
90111–06029	24 – 13
90111–06046	21 – 30
90111–06053	29 – 15
90111–06065	29 – 29
90111–06098	19 – 21
90111–06102	24 – 15
90111–06103	7 – 6
90111–06136	27 – 22
90111–06142	43 – 7
90111–06151	23 – 16
90111–06161	7 – 9
90111–06175	28 – 22
	28 – 45
90111–06188	13 – 32
90111–06190	21 – 24
90111–06191	21 – 3
90116–10048	32 – 19
90119–06138	21 – 6
90119–06267	49 – 6
90119–06313	21 – 5
90119–08179	38 – 19
90119–09010	13 – 9
90119–09013	13 – 8
90119–09019	2 – 7

PART NO.	REF. NO.
90149–05029	31 – 4
	33 – 4
90149–05037	2 – 18
	36 – 11
90149–06068	13 – 21
90149–06086	17 – 16
90149–06104	23 – 15
90149–06158	18 – 10
90149–06213	17 – 17
90149–08030	15 – 4
90149–08220	36 – 47
	36 – 58
90149–10074	20 – 7
90149–10076	20 – 6
90150–05024	38 – 2
90157–05025	36 – 20
	36 – 29
90159–04011	46 – 10
90159–06051	22 – 16
	22 – 23
90159–08005	20 – 4
90159–08006	20 – 5
90160–05012	21 – 29
90160–05013	11 – 10
90164–05014	43 – 4
90167–05076	28 – 4
	28 – 9
	28 – 12
	28 – 27
	28 – 32
	28 – 35
90170–06017	46 – 5
90170–06022	24 – 5
90170–06228	19 – 24
90170–08010	37 – 10
90176–05003	35 – 24
90176–06065	49 – 9
90176–28083	25 – 6
90179–05003	38 – 3
90179–05523	7 – 32
90179–08410	12 – 5
90179–10247	20 – 17
90179–20010	16 – 18
90179–22019	32 – 30
90179–30006	25 – 3
90183–05042	28 – 2
	28 – 13
	28 – 17

PART NO.	REF. NO.
90183–05042	28 – 20
	28 – 25
	28 – 36
	28 – 40
	28 – 43
	39 – 2
	39 – 9
	44 – 15
90183–05076	22 – 14
	22 – 19
	22 – 26
	39 – 19
	45 – 13
90183–06069	21 – 9
90185–10012	36 – 4
90185–18009	23 – 35
90185–24002	32 – 26
90201–04034	47 – 28
90201–06033	7 – 19
90201–06063	43 – 9
90201–06072	27 – 6
90201–06103	44 – 13
90201–06778	49 – 8
90201–08052	23 – 21
90201–08053	36 – 34
90201–08066	37 – 2
90201–08103	19 – 34
90201–087G2	12 – 8
90201–10029	16 – 23
90201–10075	36 – 5
90201–10083	20 – 11
90201–10084	20 – 13
90201–101J1	24 – 21
90201–12008	3 – 12
90201–12051	36 – 33
90201–12541	6 – 14
90201–12575	19 – 7
90201–127E1	19 – 3
90201–177G4	19 – 12
90201–18013	23 – 34
90201–20008	17 – 36
90201–20030	16 – 16
90201–25027	32 – 27
90201–281U8	25 – 7
90202–30235	25 – 5
90206–12074	36 – 32
90206–14086	19 – 33
90208–20001	16 – 17

PART NO.	REF. NO.
90208–22002	32 – 29
90209–22008	17 – 6
90209–28008	17 – 24
90214–22002	17 – 12
90214–22003	17 – 11
90214–28002	17 – 30
90214–29002	17 – 29
90240–08005	37 – 1
90269–05005	7 – 11
90269–05079	27 – 41
90269–06001	21 – 37
	21 – 39
	22 – 15
	22 – 22
	28 – 14
	28 – 16
	28 – 19
	28 – 37
	28 – 39
	28 – 42
	28 – 48
	38 – 21
	39 – 7
	39 – 14
	39 – 16
	44 – 18
90269–06018	21 – 13
90269–06019	27 – 42
90269–06081	22 – 32
	22 – 34
90269–06083	22 – 18
	22 – 25
90269–07007	21 – 15
	23 – 12
	23 – 17
90269–07015	48 – 25
90269–07076	21 – 16
90280–05029	3 – 10
90338–06007	38 – 18
90338–06018	22 – 4
	22 – 10
90338–07010	38 – 10
90338–16262	13 – 6
90340–14011	13 – 24
90340–14132	9 – 4
90340–18002	2 – 4
90340–36008	14 – 2
90387–05021	34 – 13

PART NO.	REF. NO.
90387–05028	37 – 15
90387–05044	45 – 11
90387–060A7	21 – 7
90387–06136	27 – 21
90387–06158	7 – 16
90387–06205	11 – 15
	28 – 21
	28 – 44
90387–06266	27 – 5
90387–06285	7 – 34
90387–06286	13 – 30
90387–062X0	23 – 11
90387–06322	19 – 22
	19 – 31
	24 – 17
90387–06357	43 – 8
90387–06361	22 – 3
	22 – 9
90387–06372	21 – 23
	23 – 14
90387–065G0	44 – 7
	44 – 11
90387–065L7	49 – 5
90387–07717	7 – 10
	21 – 2
90387–10020	36 – 6
90387–10043	23 – 32
90387–10125	23 – 36
90387–1012A	23 – 6
	23 – 28
90387–22006	17 – 9
90387–22016	30 – 8
90387–22037	23 – 2
90387–25040	17 – 4
	17 – 33
90387–28029	32 – 22
90387–28030	17 – 27
90387–28031	32 – 8
90387–30012	17 – 20
90387–31004	17 – 22
90401–10042	35 – 27
90401–10172	35 – 26
	35 – 37
	37 – 27
90401–20012	9 – 1
90413–06031	10 – 28
90430–06014	6 – 12
90430–08143	14 – 5

PART NO.	REF. NO.
90430–10004	48 – 1
90430–10005	35 – 28
	35 – 38
	37 – 28
90430–10148	48 – 18
90445–10007	10 – 26
90445–10066	10 – 24
90445–10638	10 – 25
90445–197J2	36 – 8
90450–32003	6 – 33
	6 – 36
90450–38040	6 – 19
	6 – 34
90450–53007	11 – 14
90450–58008	11 – 2
	11 – 4
90464–04005	28 – 5
	28 – 28
	39 – 4
	39 – 11
90464–10233	49 – 24
90464–12001	34 – 22
90464–12013	46 – 32
90464–13073	48 – 23
90464–13077	19 – 26
90464–13249	35 – 44
90464–14010	7 – 20
	19 – 36
90464–14013	35 – 29
	49 – 21
90464–16003	37 – 23
	46 – 33
	47 – 13
	49 – 18
90464–18002	35 – 30
90464–18013	37 – 26
90464–20023	23 – 29
90464–21003	37 – 22
90464–25009	19 – 35
	46 – 17
	46 – 23
	47 – 14
90464–30010	46 – 16
	46 – 22
90464–65001	12 – 3
90465–06M90	14 – 30
90465–10098	47 – 15
	47 – 16

PART NO.	REF. NO.
90467–08075	7 – 28
	7 – 36
90467–090A2	10 – 31
	27 – 29
	27 – 33
	27 – 37
90467–09103	10 – 30
	27 – 38
90467–10039	7 – 22
	7 – 23
90467–10041	27 – 35
90467–100A1	10 – 23
	10 – 27
90467–12085	35 – 22
	37 – 17
90467–13083	11 – 18
90467–15001	11 – 24
90467–17003	11 – 22
90467–200A0	6 – 28
	6 – 31
90467–21068	6 – 27
90467–22002	6 – 30
90467–310A0	6 – 20
	6 – 37
90480–01558	27 – 48
90480–01559	28 – 3
	28 – 10
	28 – 26
	28 – 33
	39 – 17
90480–10003	39 – 18
90480–12314	11 – 16
90480–12596	44 – 8
90480–13010	8 – 7
90480–13018	13 – 31
90480–13163	45 – 2
90480–13203	7 – 33
90480–13567	27 – 25
90480–14035	21 – 8
90480–14102	43 – 10
90480–14229	49 – 4
90480–15363	7 – 15
90480–18008	27 – 4
90501–080A2	18 – 7
90501–12743	36 – 42
	36 – 50
90506–18022	36 – 36
90506–26014	36 – 7

PART NO.	REF. NO.
90506–40012	36 – 62
90508–18051	16 – 22
90508–18134	36 – 16
90508–18135	36 – 25
90508–32141	19 – 9
90520–01002	37 – 21
90520–03019	22 – 6
	22 – 12
90520–04019	28 – 6
	28 – 29
90520–04020	21 – 27
90520–06009	21 – 18
90520–06010	22 – 20
	22 – 27
90520–07003	22 – 30
90520–10037	27 – 44
90520–10038	44 – 16
90520–10039	28 – 49
90560–06201	45 – 3
91312–05010	27 – 12
91312–06016	47 – 12
91312–06020	19 – 15
91312–06025	5 – 8
91314–08025	25 – 11
91314–08030	25 – 9
	26 – 39
91314–08040	26 – 18
91317–04030	47 – 32
91342–06030	7 – 18
91401–20012	37 – 3
91401–25015	36 – 46
	36 – 54
91402–25015	36 – 18
	36 – 27
91701–08040	36 – 17
	36 – 26
91702–08040	36 – 45
	36 – 53
91808–16023	2 – 5
92012–05010	29 – 25
92012–05030	7 – 39
92012–06010	29 – 24
92012–06012	21 – 19
	27 – 24
92012–06020	19 – 29
92012–06025	23 – 10
92012–06035	27 – 7
	49 – 15

PART NO.	REF. NO.
92014–06014	49 – 23
92014–08025	37 – 4
92017–05016	38 – 7
92017–06012	35 – 32
	35 – 35
	46 – 25
92017–06014	34 – 20
	34 – 21
	48 – 28
	49 – 17
	49 – 20
92017–06016	49 – 27
92017–06025	24 – 16
92017–06030	36 – 56
92017–08012	14 – 4
92902–04600	47 – 27
92907–08600	16 – 32
93101–12173	6 – 6
93102–12106	19 – 5
93102–15212	16 – 28
93102–40030	17 – 35
93106–28043	30 – 4
93106–35042	32 – 7
93106–40013	32 – 5
	32 – 16
93109–17071	23 – 8
	23 – 27
	24 – 9
93210–04092	13 – 3
93210–06667	8 – 12
93210–07540	13 – 11
93210–12790	13 – 7
93210–13657	13 – 20
93210–14369	13 – 25
93210–14MF4	38 – 8
93210–15620	35 – 4
93210–16325	13 – 23
93210–17008	48 – 15
93210–19123	14 – 26
93210–22001	8 – 6
93210–28543	14 – 8
93210–30694	6 – 17
93210–357A3	14 – 3
93210–46044	6 – 24
93210–61750	6 – 10
93306–00106	6 – 5
93306–07208	30 – 3
93306–07806	32 – 6

PART NO.	REF. NO.
93306–20486	17 – 37
93306–20487	17 – 14
93306–20531	32 – 4
	32 – 15
93306–20663	17 – 19
93306–30534	17 – 3
93310–33277	16 – 19
93315–21570	16 – 29
93315–31758	23 – 7
	23 – 26
	24 – 8
93317–11096	16 – 31
93317–11295	19 – 16
93317–330A0	23 – 3
93317–330A1	23 – 4
93399–99932	25 – 1
93399–99957	26 – 38
93440–25186	17 – 7
93440–31187	17 – 25
93440–64199	17 – 21
93450–18157	3 – 9
93501–04011	36 – 43
	36 – 51
93607–44002	5 – 11
93610–20189	14 – 20
93900–00030	30 – 6
	32 – 11
94112–17145	30 – 5
94118–17092	32 – 10
94581–79066	8 – 10
94591–78128	5 – 5
94682–5502R	32 – 2
94701–00446	1 – 1
	2 – 9
94A40–18118	32 – 1
95022–06045	35 – 42
95027–06016	24 – 11
	48 – 31
95027–06020	46 – 6
95027–06045	49 – 10
95302–08600	23 – 20
95304–06700	19 – 27
95317–06700	24 – 3
95602–05200	45 – 7
95602–06200	21 – 31
95602–10100	24 – 20
95602–10200	23 – 31
	25 – 13

PART NO.	REF. NO.
95602–10200	32 – 20
95607–04100	47 – 29
95607–06100	35 – 13
	49 – 11
95607–06200	34 – 19
95607–10200	21 – 35
	23 – 24
	23 – 38
95612–08625	2 – 6
95702–06500	27 – 26
	29 – 8
	29 – 19
	36 – 57
	48 – 4
95707–06500	24 – 18
95812–06040	13 – 12
95812–06050	13 – 13
95812–06065	13 – 14
95812–08035	12 – 6
95812–08060	13 – 16
95822–06008	49 – 2
95822–06020	44 – 5
95822–06025	6 – 22
95827–06025	44 – 12
95D02–06012	36 – 35
95D32–06012	7 – 14
95D32–06016	45 – 4
95D37–06020	47 – 18
95D37–10025	20 – 14
95E32–06025	27 – 9
95E37–06014	27 – 8
97607–04316	35 – 15
97702–30016	43 – 3
97702–50016	44 – 17
97707–50012	39 – 5
	39 – 12
98507–04010	46 – 11
98507–04020	46 – 27
98507–04035	46 – 28
99001–07600	16 – 33
99002–10600	19 – 6
99009–09800	38 – 12
99009–10400	16 – 24
99009–12400	6 – 9
99009–17400	19 – 13
99244–00080	21 – 40
99247–00080	21 – 40
99530–08012	14 – 9

PART NO.	REF. NO.
99530–10014	13 – 5
99530–12016	2 – 23