YAMAHA

PARTS CATALOGUE

CM6

RM7

VPBC5

T115FL-5 (BBY1) MALAYSIA

YAMAHA GENUINE Parts & Accessories

1XBBY-440E1

( )

T115FL-5
PARTS CATALOGUE
©2022 by Yamaha Motor Co., Ltd.
1st edition, November 2022
All rights reserved.
Any reprinting or unauthorized use
without the written permission of
Yamaha Motor Co., Ltd.
is expressly prohibited.
Printed in Japan.

FOREWORD

This Parts Catalogue is related to the parts for the model(s) on the cover page. When you are ordering replacement parts, please refer to this Parts Catalogue and quote both part numbers and part names correctly.

1. Modifications or additions which have been made after the issue of the Parts Catalogue will be announced in the Parts News.
   It is advisable that you make the necessary corrections to the Parts Catalogue according to the Parts News.

2. Abbreviations
   The following abbreviations are used in this Parts Catalogue.

   "UR" Use specified parts number.

   "UN" Use as many as needed.

   "AP" Alternate Parts

   "LM" Locally Made (Parts need to be ordered locally)

   "F#" Frame No. (Applicable machine No.)

   "O/S" Over Size

3. The number of components for assembly
   - Parts, which are to be supplied in an assembly, are listed with a dot (.) in front of the part name as shown below.
   - The numeral appearing to the right of each component part indicates the quantity of parts for each assembly unit.

PART NO.	DESCRIPTION	Q'TY	REMARKS
2F5–83310–60	FRONT FLASHER LIGHT ASSY	2	
115–83311–60	.BULB (6V–18W)	1	

4. Applicable colours of graphics are represented in the "REMARKS" as shown below.

PART NO.	DESCRIPTION	Q'TY	REMARKS
2N4–24110–00–X5	FUEL TANK COMP.	2	MXR
3J1–24240–10	.GRAPHIC, FUEL TANK	1	FOR MXR

5. Note that the illustrations for reference in finding parts numbers are not to be used for assembling. When assembling, please use the applicable service manual.

6. The asterisk (*) before a reference number indicates modified items after the first edition.

7. Applicable Serial No.

Frame Serial No.

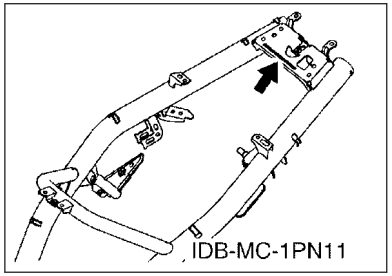

Engine Serial No.

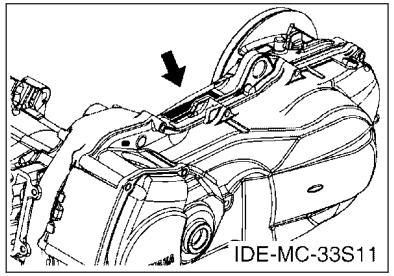

8. Applicable Colour Code (The (*) mark shows Model colour.)

Abbreviation	Colour Name	Colour Code
CIS	CIRCUIT SILVER	00WN
CM6(*)	CYAN METALLIC 6	1344
MBL2	MAT BLACK 2	0582
RM7(*)	RED METALLIC 7	1218
SMX	BLACK METALLIC X	0903
VPBC5(*)	VIVID PURPLISH BLUE COCKTAIL 5	1177
YB	YAMAHA BLACK	0033

9. Applicable Starting Serial No.

Frame Serial No.

Serial No.	Name Of Q'ty Column	Model Code

Engine Serial No.

Serial No.	Name Of Q'ty Column	Model Code

CONTENTS

ENGINE

CYLINDER HEAD....1
CRANKSHAFT & PISTON....2
VALVE....3
CAMSHAFT & CHAIN....4
OIL PUMP....5
INTAKE....6
EXHAUST....8
CRANKCASE....9
CRANKCASE COVER 1....10
STARTER....11
STARTER CLUTCH....12
CLUTCH....13
TRANSMISSION....14
SHIFT CAM & FORK....16
SHIFT SHAFT....17

CHASSIS

FRAME....18
FENDER....19
SIDE COVER....20
REAR ARM & SUSPENSION....22
STEERING....23
FRONT FORK....24
FUEL TANK....26
SEAT....27
FRONT WHEEL....28
FRONT BRAKE CALIPER....29
REAR WHEEL....30
STEERING HANDLE & CABLE....32
FRONT MASTER CYLINDER....33
STAND & FOOTREST....34
LEG SHIELD....36
GENERATOR....39
STARTING MOTOR....40
FLASHER LIGHT....41
METER....42
HEADLIGHT....43
TAILLIGHT....44
SWITCH & LEVER FOR DISK BRAKE....45
ELECTRICAL 1....46
ELECTRICAL 2....47

INDEX

NUMERICAL INDEX....48

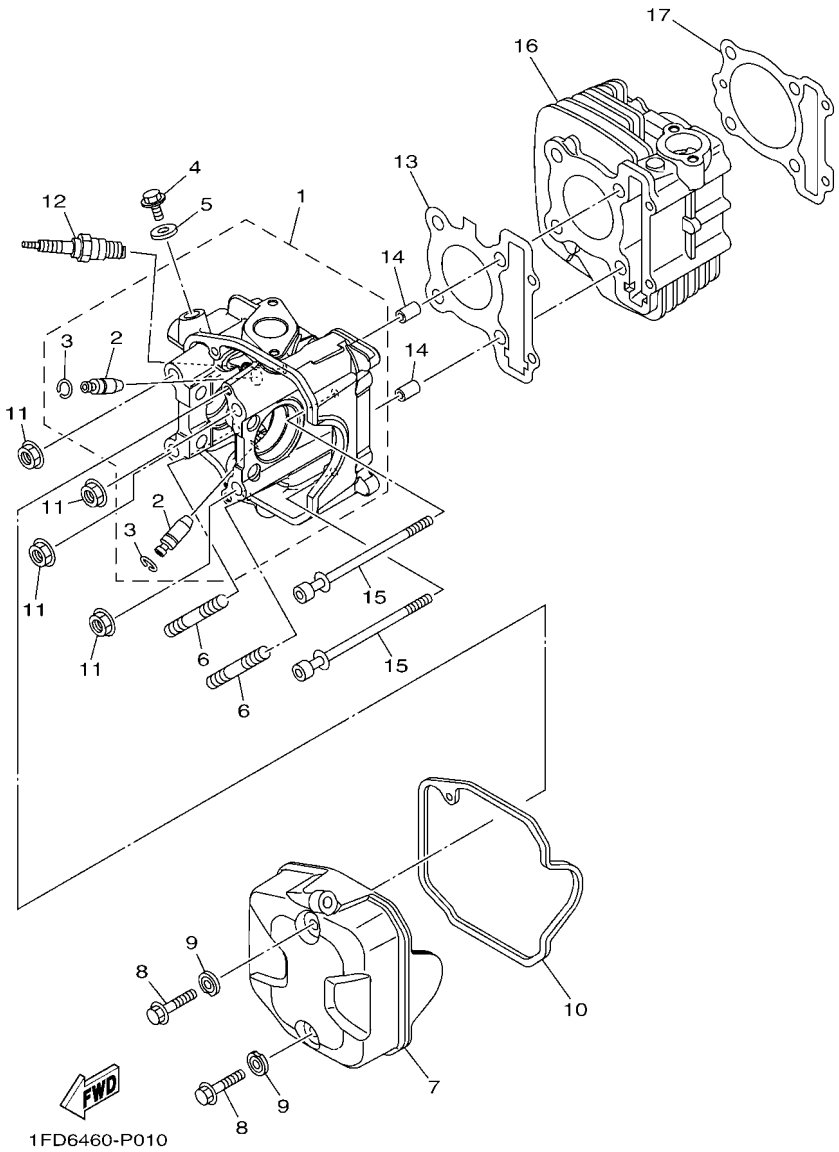

FIG. 1 CYLINDER HEAD

REF. NO.	PART NO.	DESCRIPTION	BBY1					REMARKS
1	BBY–E1111–00	HEAD, CYLINDER 1	1					
2	1DR–E1133–10	.GUIDE, VALVE 1	2					
3	93440–10153	.CIRCLIP	2					
4	95E32–10014	BOLT, FLANGE DEEP RECESS	1					
5	90430–10807	GASKET	1					
6	95612–08625	BOLT, STUD	2					
7	BBY–E1191–00	COVER, CYLINDER HEAD 1	1					
8	95D32–06030	BOLT, FLANGE DEEP RECESS	2					
9	1FC–E1173–00	WASHER, SEALING	2					
10	1YC–E1193–00	GASKET, HEAD COVER 1	1					
11	90179–08518	NUT	4					
12	94700–00372	PLUG, SPARK (NGK CR6HSA)	1					
13	54P–E1181–00	GASKET, CYLINDER HEAD 1	1					
14	99530–10114	PIN, DOWEL	2					
15	90110–06868	BOLT, HEXAGON SOCKET HEAD	2					
16	1FP–E1310–00	CYLINDER	1					
17	BBY–E1351–00	GASKET, CYLINDER	1					

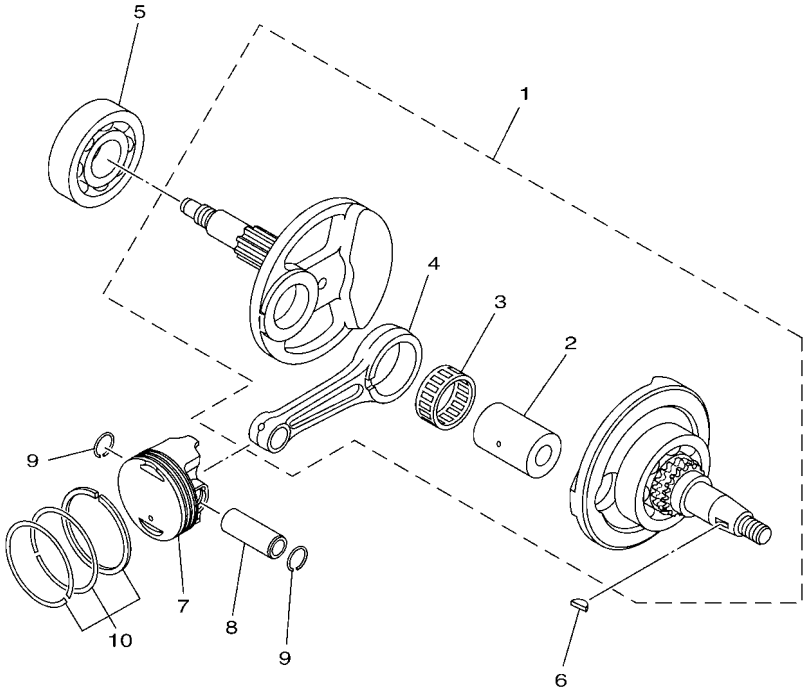

1PB2422-M020

FIG. 2 CRANKSHAFT & PISTON

REF. NO.	PART NO.	DESCRIPTION	BBY1					REMARKS
1	BBY–WE140–00	CRANKSHAFT ASSY	1					
2	1DY–E1681–00	.PIN, CRANK 1	1					
3	93310–528YA	.BEARING	1					
4	1FC–E1651–00	.ROD, CONNECTING	1					
5	93306–305XA	BEARING	1					
6	90280–03017	KEY, WOODRUFF	1					
7	1PB–E1631–00	PISTON (STD)	1					
8	54S–E1633–00	PIN, PISTON	1					
9	93450–14088	CIRCLIP	2					
10	1DY–E1603–10	PISTON RING SET (STD)	1					

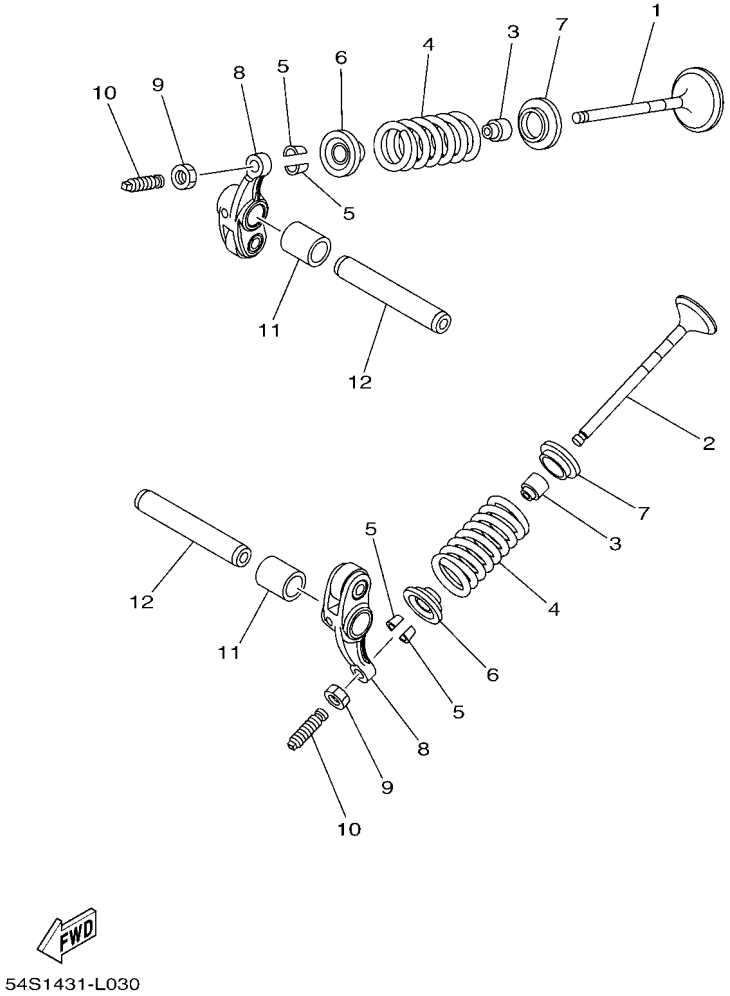

FIG. 3 VALVE

REF. NO.	PART NO.	DESCRIPTION	BBY1					REMARKS
1	2PH–E2111–00	VALVE, INTAKE	1					
2	B8B–E2121–00	VALVE, EXHAUST	1					
3	54S–E2119–00	SEAL, VALVE STEM	2					
4	B7E–E2113–00	SPRING, VALVE INNER	2					
5	5TL–E2118–00	LOCK, VALVE SPRING RETAINER	4					
6	B63–E2117–01	RETAINER, VALVE SPRING	2					
7	55P–E2126–00	SEAT, VALVE SPRING 2	2					
8	2BL–E2151–00	ARM, VALVE ROCKER	2					
9	90170–05803	NUT	2					
10	33S–E2159–01	SCREW, VALVE ADJUSTING	2					
11	5P0–E2662–00	COLLAR 1	2					
12	1FP–E2146–01	SHAFT, ROCKER	2					

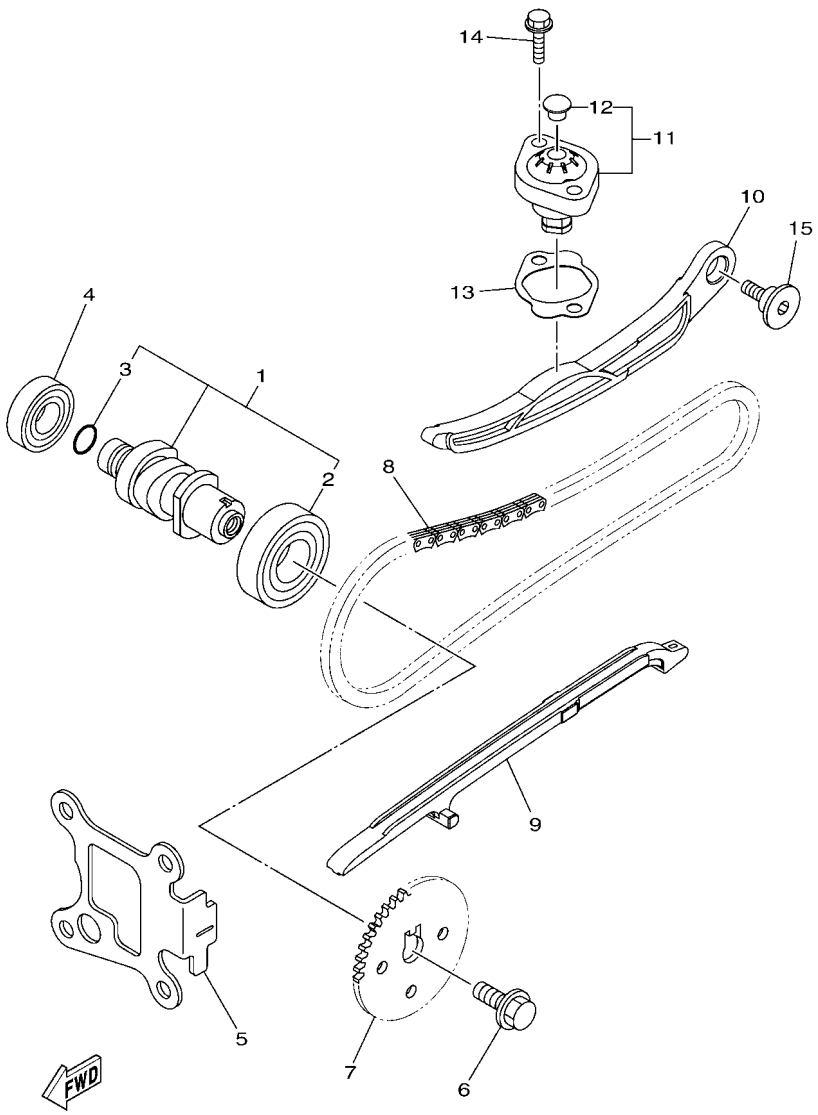

BBK1422-W040

FIG. 4 CAMSHAFT & CHAIN

REF. NO.	PART NO.	DESCRIPTION	BBY1					REMARKS
1	BBY–E2170–00	CAMSHAFT ASSY 1	1					
2	93306–054YM	.BEARING	1					
3	93210–12801	.O-RING	1					
4	93306–002YW	BEARING	1					
5	1DB–E111F–00	PLATE	1					
6	90105–088E1	BOLT, FLANGE	1					
7	44S–E2176–00	SPROCKET, CAM CHAIN	1					
8	94568–A6090	CHAIN	1					
9	1FC–E2231–00	GUIDE, STOPPER 1	1					
10	BBY–E2241–00	GUIDE, STOPPER 2	1					
11	2ND–E2210–20	TENSIONER ASSY, CAM CHAIN	1					
12	5MX–E2222–00	.PLUG	1					
13	2VP–E2213–00	GASKET, TENSIONER CASE	1					
14	95E32–06020	BOLT, FLANGE DEEP RECESS	2					
15	1DR–E2228–00	BOLT	1					

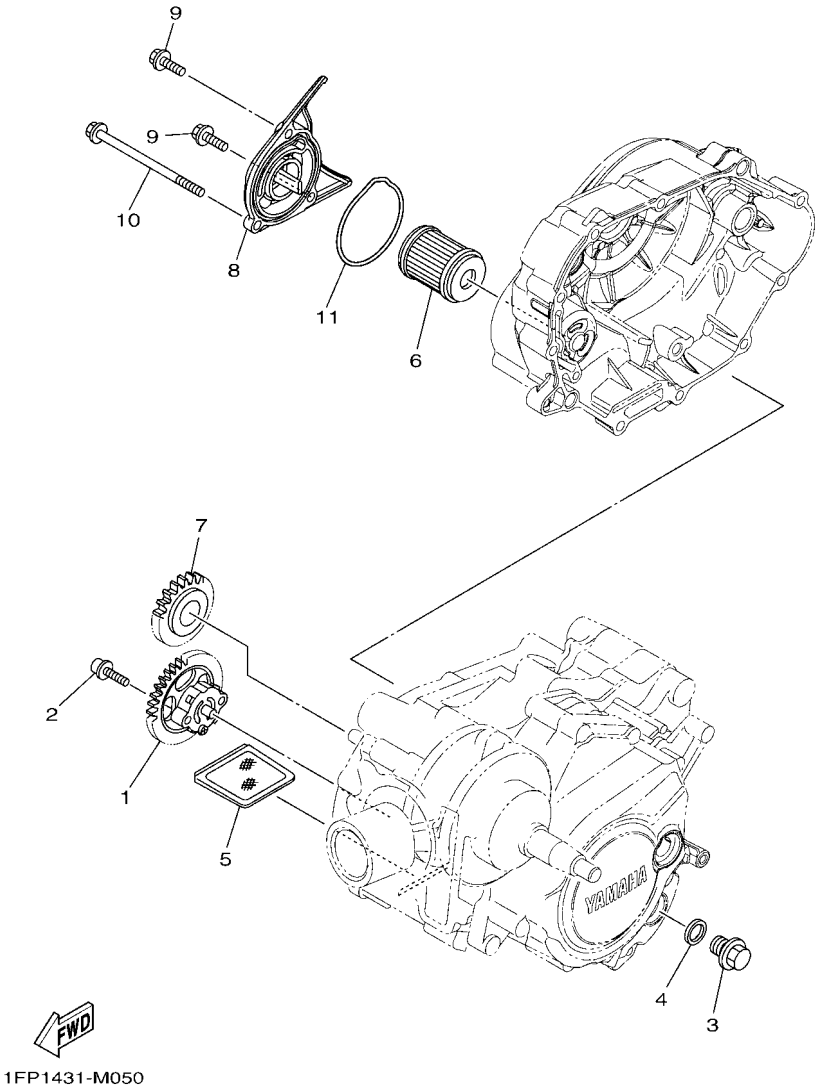

FIG. 5 OIL PUMP

REF. NO.	PART NO.	DESCRIPTION	BBY1					REMARKS
1	16S–E3300–10	OIL PUMP ASSY	1					
2	90110–05801	BOLT, HEXAGON SOCKET HEAD	2					
3	90340–12816	BOLT, STRAIGHT SCREW	1					
4	90430–12803	GASKET	1					
5	4LS–E3411–00	STRAINER, OIL	1					
6	38B–E3440–01	ELEMENT ASSY, OIL CLEANER	1					
7	31D–E3324–00	GEAR, PUMP DRIVE	1					
8	BBY–E3447–00	COVER, OIL ELEMENT	1					
9	95E32–06020	BOLT, FLANGE DEEP RECESS	2					
10	95E32–06100	BOLT, FLANGE DEEP RECESS	1					
11	93210–59800	O-RING	1					

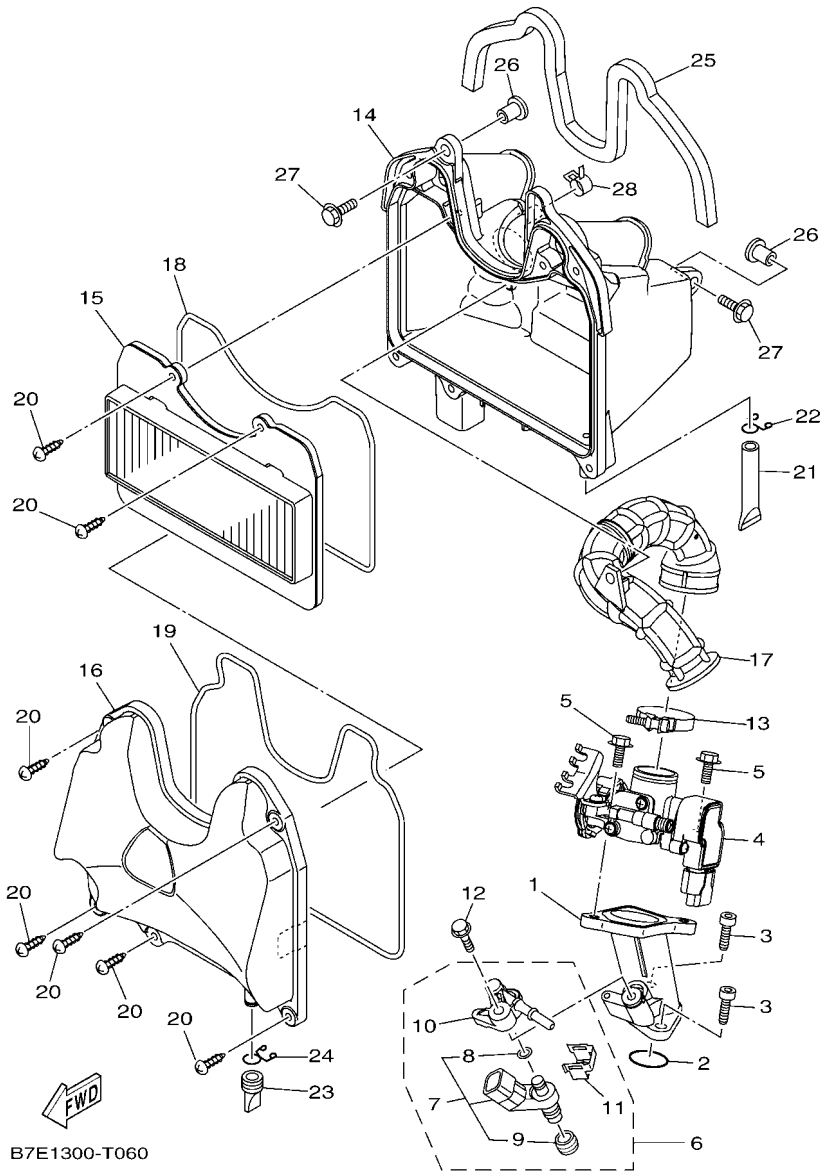

FIG. 6 INTAKE

REF. NO.	PART NO.	DESCRIPTION	BBY1					REMARKS
1	B7E–E3585–00	MANIFOLD	1					
2	93210–29574	O-RING	1					
3	91332–06020	BOLT	2					
4	B7E–E3750–03	THROTTLE BODY ASSY	1					
5	95E32–06016	BOLT, FLANGE DEEP RECESS	2					
6	B7E–E3770–00	INJECTOR ASSY	1					
7	B7E–E3761–00	.INJECTOR	1					
8	2SU–E4147–00	..O-RING	1					
9	B7E–E41A1–00	..SEAL RING	1					
10	2SU–E3938–00	.PIPE	1					
11	1ST–E4137–00	.CLIP	1					
12	95D32–06025	BOLT, FLANGE DEEP RECESS	1					
13	54P–E3575–00	BAND	1					
14	1FC–E4411–10	CASE, AIR CLEANER 1	1					
15	1FC–E4450–00	ELEMENT ASSY, AIR CLEANER	1					
16	1FC–E4412–00	CAP, CLEANER CASE 1	1					
17	1FC–E4453–10	JOINT, AIR CLEANER 1	1					
18	1FC–E4462–00	SEAL	1					
19	1FC–E4452–00	SEAL	1					
20	97702–50030	SCREW, TAPPING	7					
21	5HU–E443E–01	PIPE, DRAIN	1					
22	90467–110A3	CLIP	1					
23	16S–E443G–00	PIPE, DRAIN 2	1					
24	90467–12802	CLIP	1					
25	1FC–E4426–00	DAMPER 2	1					
26	90387–06803	COLLAR	2					
27	90119–06810	BOLT, WITH WASHER	2					

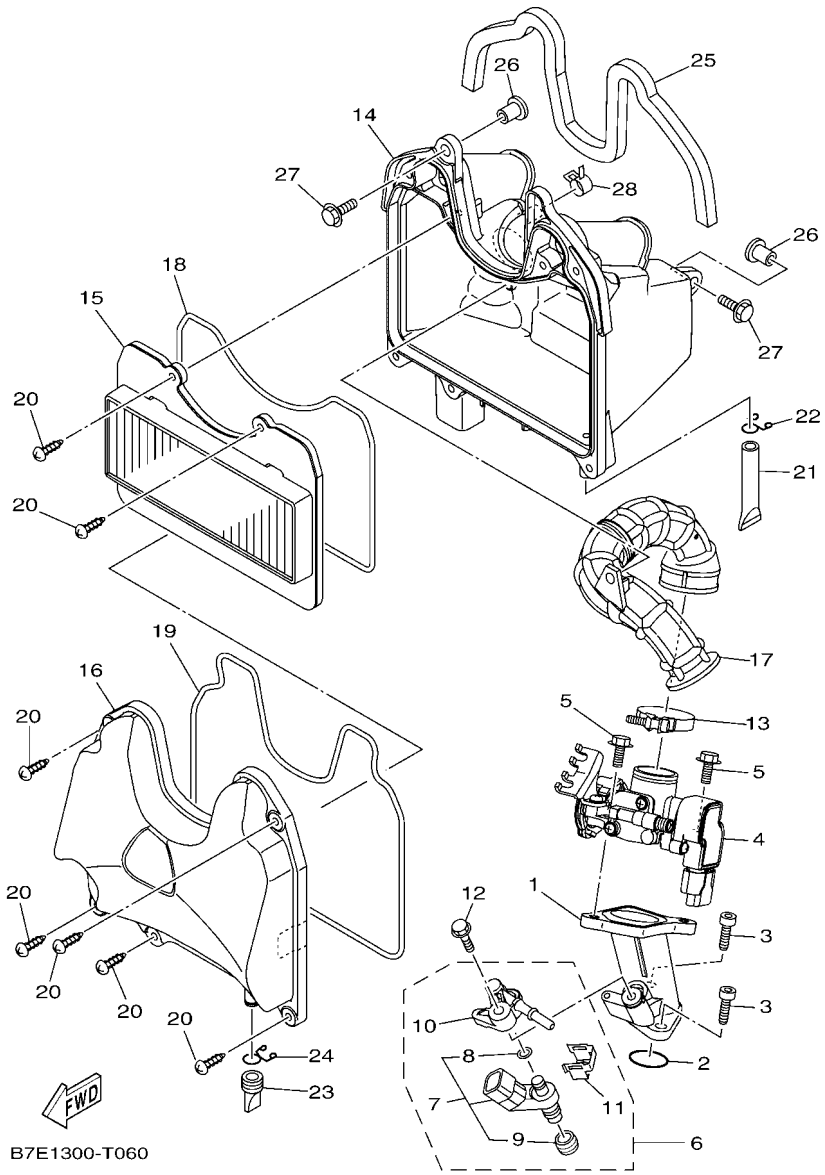

FIG. 6 INTAKE

REF. NO.	PART NO.	DESCRIPTION	BBY1					REMARKS
28	90467–13064	CLIP	1					

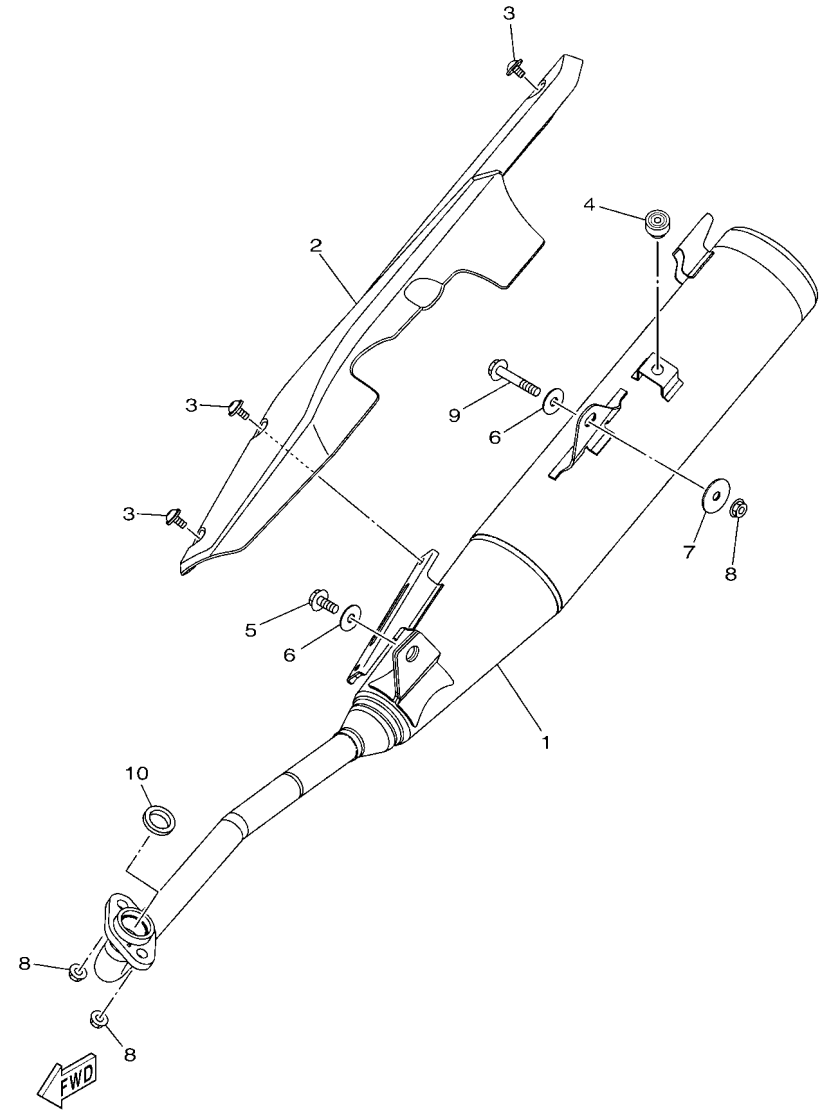

FIG. 7 EXHAUST

REF. NO.	PART NO.	DESCRIPTION	BBY1					REMARKS
1	BBY–E4711–00	MUFFLER 1	1					
2	B7E–E4718–01	PROTECTOR, MUFFLER 1	1					
3	90111–06807	BOLT, HEXAGON SOCKET BUTTON	3					
4	22W–24181–00	DAMPER, LOCATING 1	1					
5	95D02–08020	BOLT, FLANGE DEEP RECESS	1					
6	90201–08055	WASHER, PLATE	2					
7	90201–08116	WASHER, PLATE	1					
8	95702–08500	NUT, FLANGE	3					
9	95D32–08040	BOLT, FLANGE DEEP RECESS	1					
10	10C–E4613–00	GASKET, EXHAUST PIPE	1					

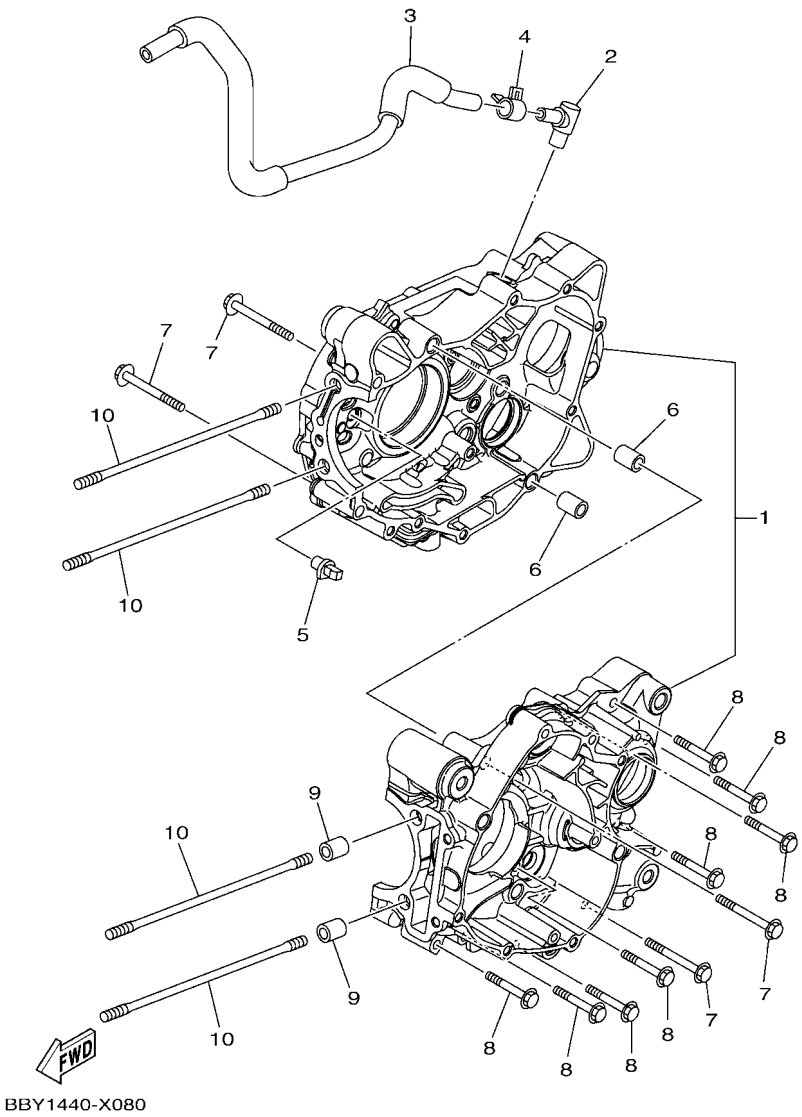

FIG. 8 CRANKCASE

REF. NO.	PART NO.	DESCRIPTION	BBY1					REMARKS
1	1FP–E5150–31	CRANKCASE ASSY	1					
2	4YS–E5371–00	BREATHER	1					
3	1FP–E1166–11	PIPE, BREATHER 1	1					
4	90467–13064	CLIP	1					
5	16S–E5155–00	NOZZLE 3	1					
6	99530–10114	PIN, DOWEL	2					
7	95E32–06055	BOLT, FLANGE DEEP RECESS	4					
8	95E32–06040	BOLT, FLANGE DEEP RECESS	8					
9	99530–10114	PIN, DOWEL	2					
10	90116–08850	BOLT, STUD	4					

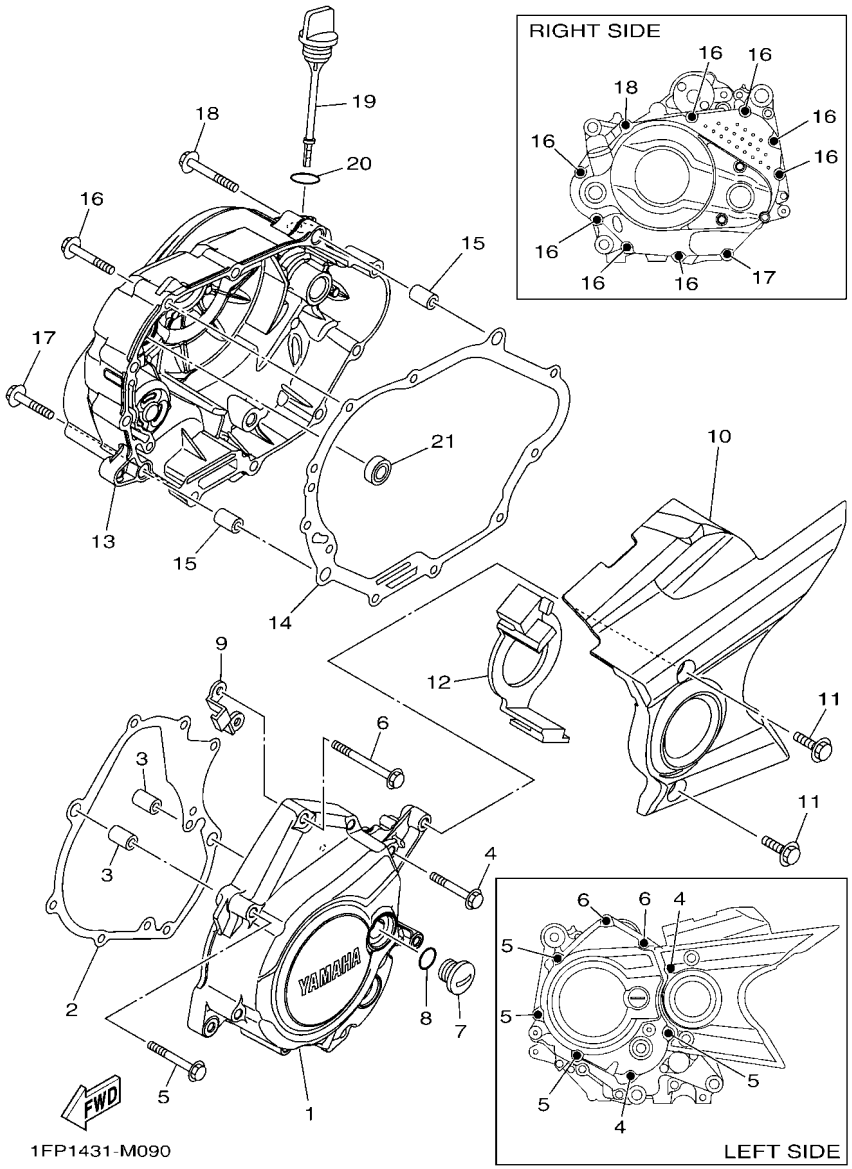

FIG. 9 CRANKCASE COVER 1

REF. NO.	PART NO.	DESCRIPTION	BBY1					REMARKS
1	BBY–E5411–00	COVER, CRANKCASE 1	1					
2	BBY–E5451–00	GASKET, CRANKCASE COVER 1	1					
3	99530–10114	PIN, DOWEL	2					
4	90105–06893	BOLT, FLANGE	2					
5	95E32–06050	BOLT, FLANGE DEEP RECESS	4					
6	95E32–06060	BOLT, FLANGE DEEP RECESS	2					
7	90340–14812	PLUG, STRAIGHT SCREW	1					
8	93210–14899	O-RING	1					
9	1FP–E5113–00	PLATE	1					
10	1FC–E5418–00	COVER, CHAIN CASE	1					
11	95D02–06016	BOLT, FLANGE DEEP RECESS	2					
12	16S–E5377–01	GUIDE, INLET	1					
13	BBY–E5421–00	COVER, CRANKCASE 2	1					
14	BBY–E5461–00	GASKET, CRANKCASE COVER 2	1					
15	99530–10114	PIN, DOWEL	2					
16	95E32–06040	BOLT, FLANGE DEEP RECESS	8					
17	95E37–06030	BOLT, FLANGE DEEP RECESS	1					
18	95E32–06050	BOLT, FLANGE DEEP RECESS	1					
19	16S–E5362–10	PLUG, OIL LEVEL	1					
20	93210–198F0	O-RING	1					
21	93101–10841	OIL SEAL	1					

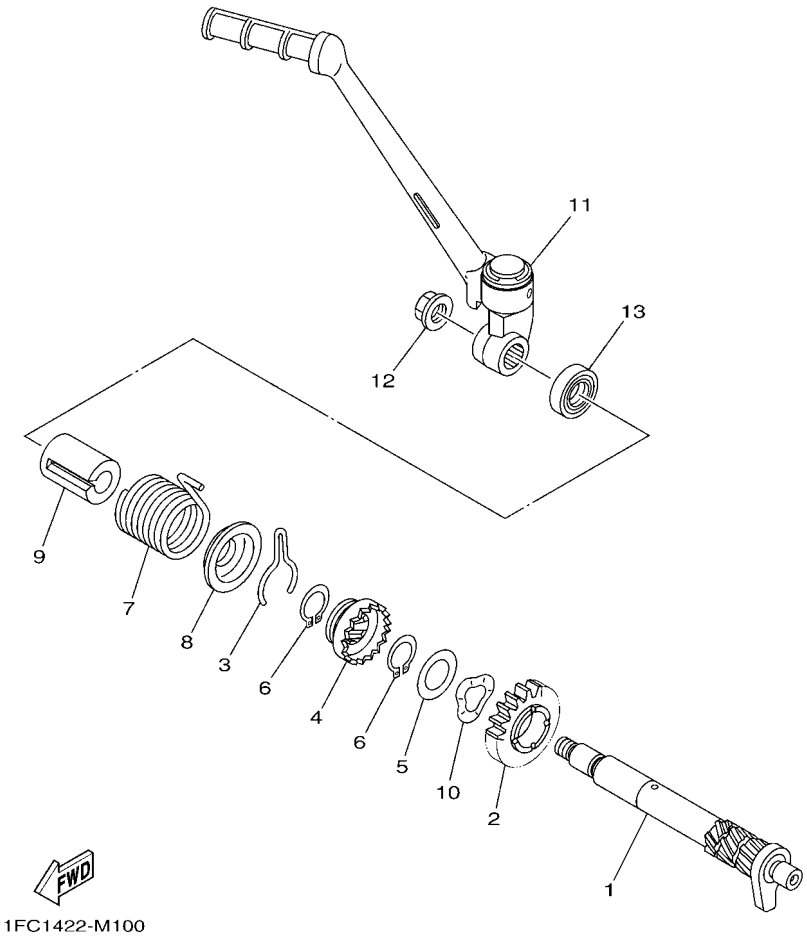

FIG. 10 STARTER

REF. NO.	PART NO.	DESCRIPTION	BBY1					REMARKS
1	1FC–E5661–00	AXLE, KICK	1					
2	1FC–E5641–00	GEAR, KICK	1					
3	1FC–E5673–00	CLIP	1					
4	1FC–E5671–00	WHEEL, RATCHET	1					
5	1P6–E5644–00	SHIM	1					
6	99009–19400	CIRCLIP	2					
7	1FC–E5665–00	SPRING, KICK	1					
8	1FC–E5645–00	PLATE	1					
9	1FC–E5664–00	GUIDE, SPRING	1					
10	1FC–E5643–00	WASHER, WAVE	1					
11	1FC–E5620–01	KICK CRANK ASSY	1					
12	90179–10803	NUT	1					
13	93102–16801	OIL SEAL	1					

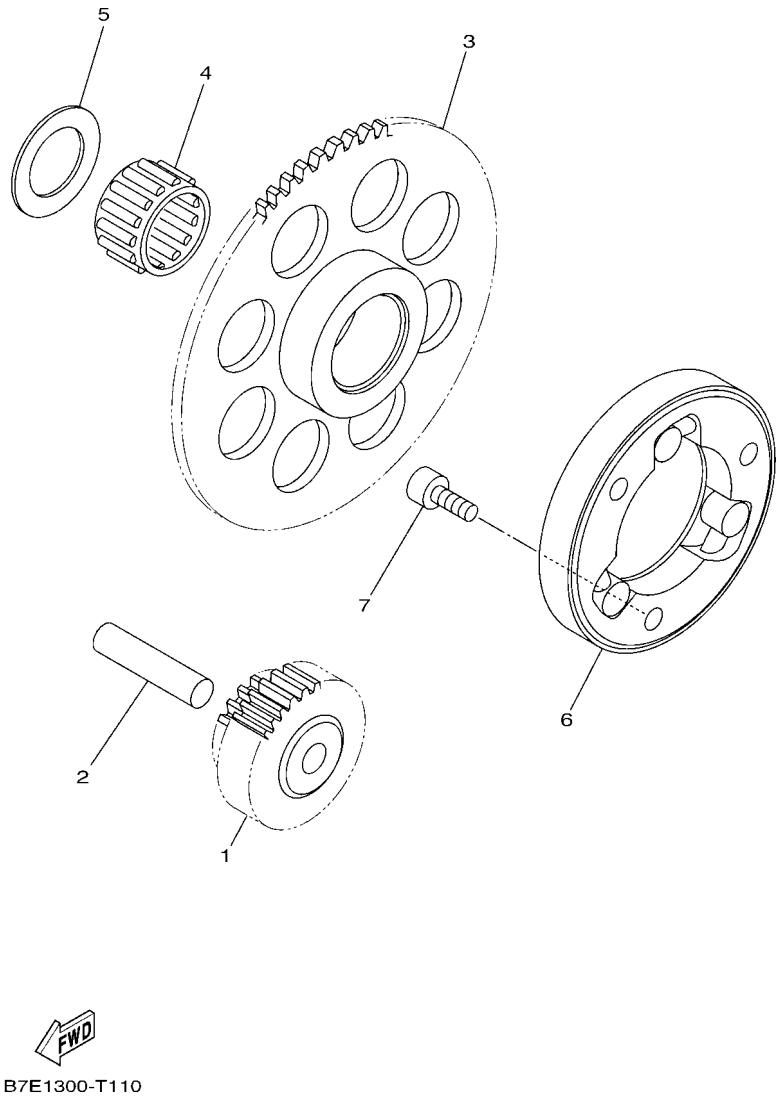

FIG. 11 STARTER CLUTCH

REF. NO.	PART NO.	DESCRIPTION	BBY1					REMARKS
1	5TN–E5512–00	GEAR, IDLER 1	1					
2	93608–34800	PIN, DOWEL	1					
3	1FP–E5524–00	WHEEL, STARTER	1					
4	93310–419X6	BEARING	1					
5	90201–19801	WASHER, PLATE	1					
6	B7E–E5580–00	STARTER CLUTCH OUTER ASSY	1					
7	91312–06012	BOLT, HEXAGON SOCKET HEAD	3					

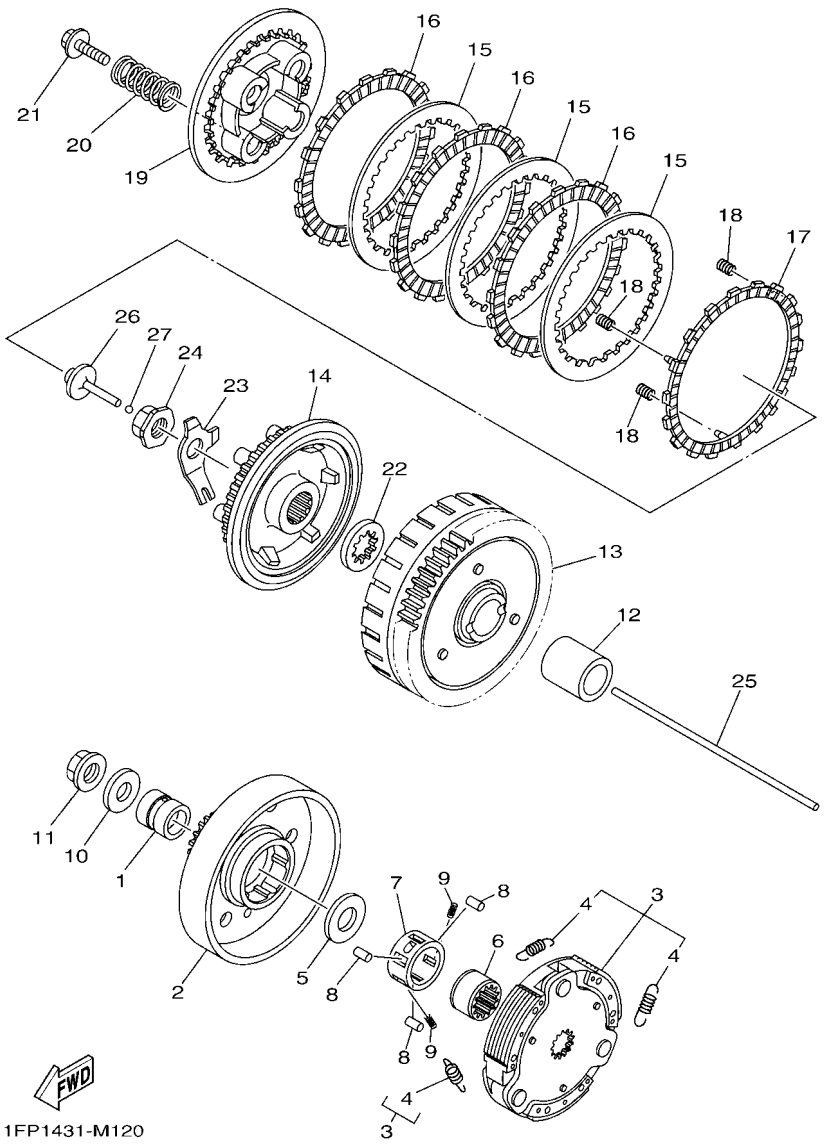

FIG. 12 CLUTCH

REF. NO.	PART NO.	DESCRIPTION	BBY1					REMARKS
1	1FP–E6116–00	COLLAR 1	1					
2	1FP–E6611–22	CLUTCH HOUSING COMP.	1					
3	1FP–E6620–10	CLUTCH CARRIER ASSY	1					
4	1FP–E6626–10	.SPRING, CLUTCH WEIGHT 1	3					
5	90201–167P7	WASHER, PLATE	1					
6	5LM–E6512–00	BOSS, CLUTCH HOUSING	1					
7	5D9–E6586–00	CAGE	1					
8	93606–10800	PIN, DOWEL	3					
9	90501–04805	SPRING, COMPRESSION	2					
10	90201–12019	WASHER, PLATE	1					
11	90179–12802	NUT	1					
12	90387–20810	COLLAR	1					
13	1FP–E6150–10	PRIMARY DRIVEN GEAR COMP.	1					
14	1FP–E6371–10	BOSS, CLUTCH	1					
15	1FP–E6324–00	PLATE, CLUTCH 1	3					
16	1FP–E6321–10	PLATE, FRICTION	3					
17	1FP–E6320–10	PLATE, FRICTION 1	1					
18	1FP–E6383–10	SPRING.,CUSHION	3					
19	1FP–E6351–10	PLATE, PRESSURE 1	1					
20	1FP–E6333–10	SPRING, CLUTCH 1	4					
21	1FP–E6777–10	BOLT	4					
22	1FP–E6628–00	WASHER	1					
23	1FP–E6135–00	WASHER, LOCK	1					
24	90179–14001	NUT	1					
25	1FC–E6357–00	ROD, PUSH 2	1					
26	16S–E6356–00	ROD, PUSH 1	1					
27	93503–16807	BALL	1					

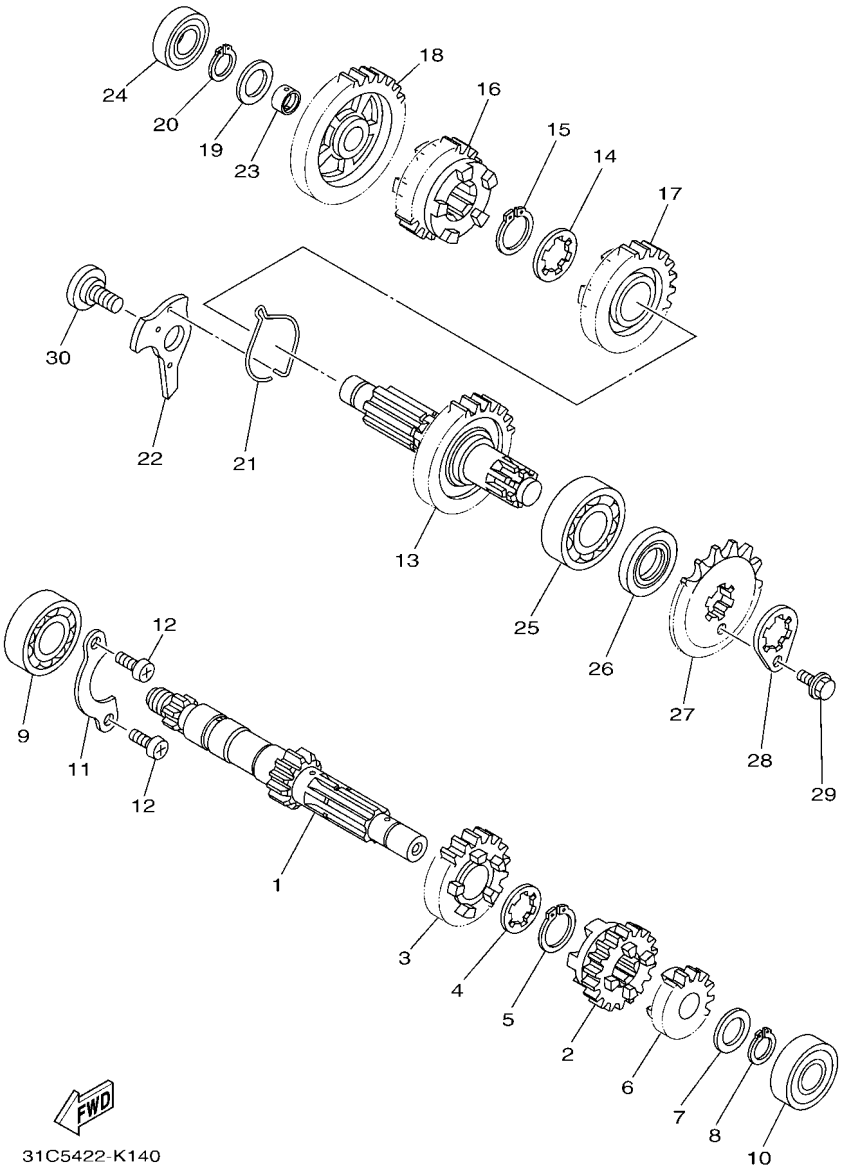

FIG. 13 TRANSMISSION

REF. NO.	PART NO.	DESCRIPTION	BBY1					REMARKS
1	1FC–E7411–10	AXLE, MAIN (12T)	1					
2	1FC–E7131–00	GEAR, 3RD PINION (17T)	1					
3	1FC–E7141–00	GEAR, 4TH PINION (22T)	1					
4	90209–17285	WASHER	1					
5	93410–20809	CIRCLIP	1					
6	1FC–E7121–00	GEAR, 2ND PINION (16T)	1					UR
	1FC–E7121–10	GEAR, 2ND PINION (16T)	1					UR
7	90201–15700	WASHER, PLATE	1					
8	99009–15400	CIRCLIP	1					
9	93306–054Y2	BEARING	1					
10	93306–252XN	BEARING	1					
11	1FP–E7471–00	PLATE, COVER	1					
12	91332–06012	BOLT	2					
13	1FC–E7402–10	DRIVE AXLE ASSY (30T)	1					
14	90209–18208	WASHER	1					
15	93410–22039	CIRCLIP	1					
16	1FC–E7241–00	GEAR, 4TH WHEEL (23T)	1					
17	1FC–E7231–00	GEAR, 3RD WHEEL (23T)	1					
18	1FC–E7211–10	GEAR, 1ST WHEEL (34T)	1					
19	90201–15700	WASHER, PLATE	1					
20	99009–15400	CIRCLIP	1					
21	1DY–E8545–00	SPRING	1					
22	1FC–E8561–00	PLATE, SIDE 1	1					
23	90387–15817	COLLAR	1					
24	93306–002YE	BEARING	1					
25	93306–204YC	BEARING	1					
26	93102–20892	OIL SEAL	1					

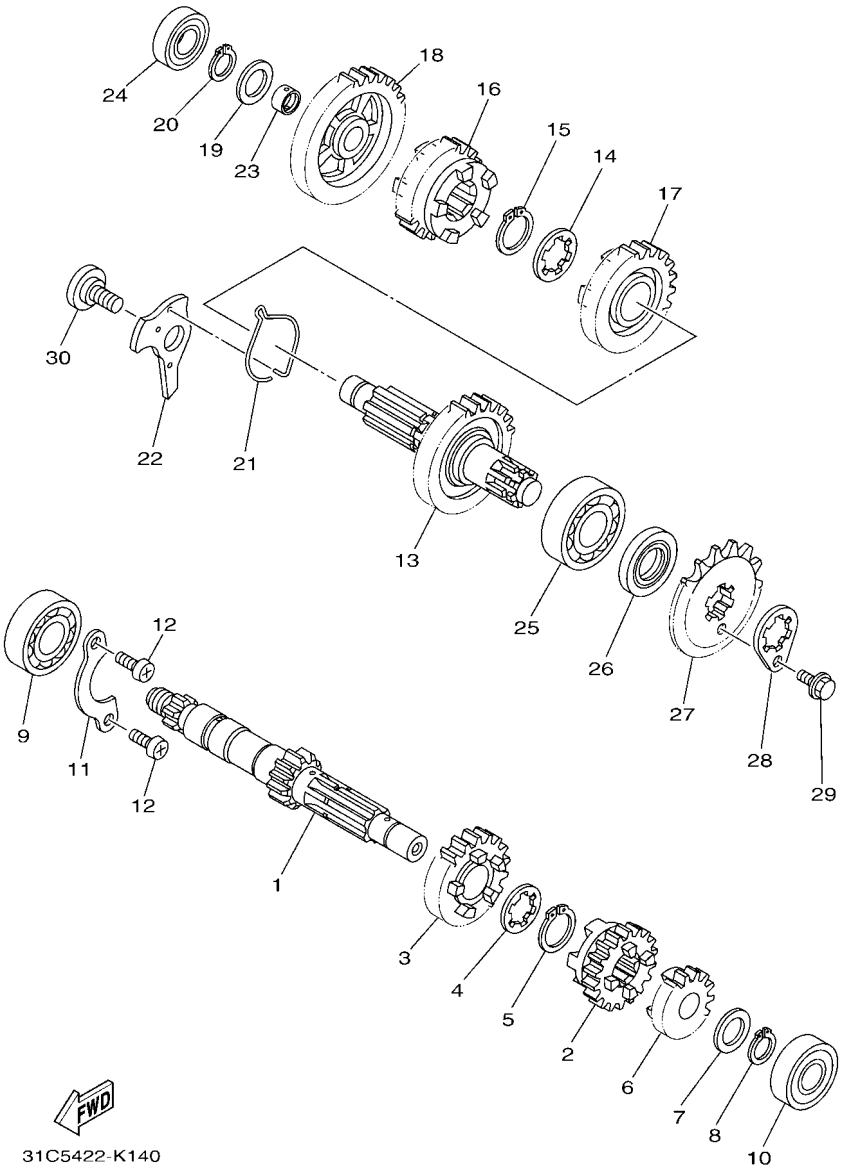

FIG. 13 TRANSMISSION

REF. NO.	PART NO.	DESCRIPTION	BBY1					REMARKS
27	93822–14838	SPROCKET, DRIVE (14T)	1					
28	1S8–E7456–00	HOLDER, SPROCKET	1					
29	95E32–06010	BOLT, FLANGE DEEP RECESS	1					
30	1FP–E8563–00	SCREW, STOPPER PLATE	1					

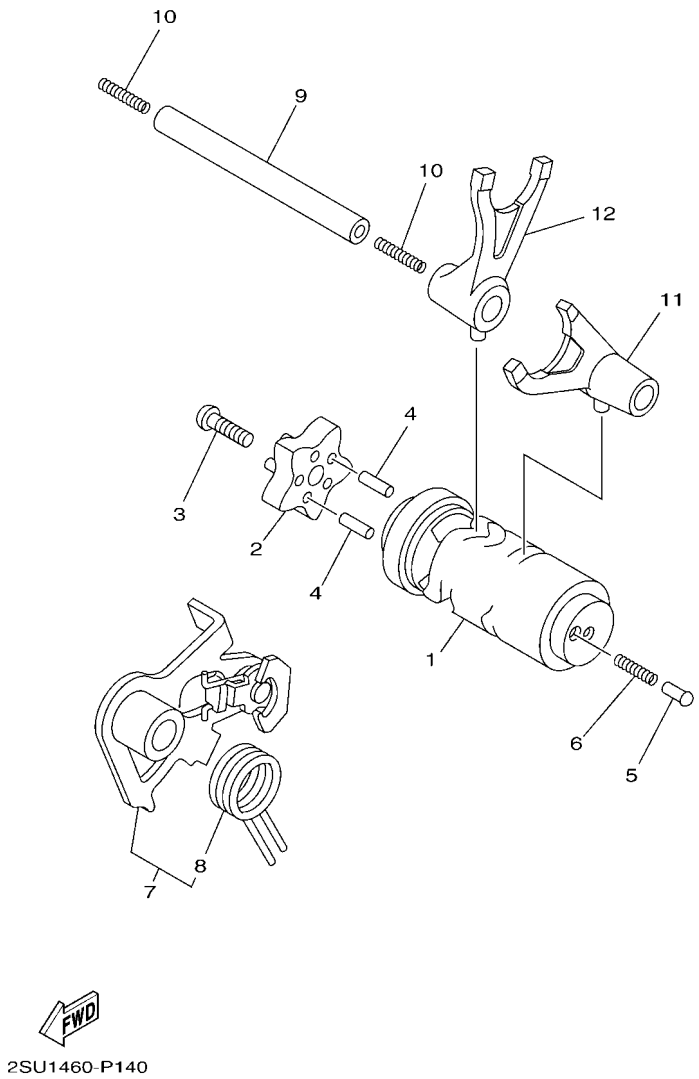

FIG. 14 SHIFT CAM & FORK

REF. NO.	PART NO.	DESCRIPTION	BBY1					REMARKS
1	2VP–E8540–00	SHIFT CAM ASSY	1					
2	2SU–E8185–00	SEGMENT	1					
3	90149–06159	SCREW	1					
4	93604–12831	PIN, DOWEL	2					
5	1FC–E8542–00	POINT, NEUTRAL	1					
6	90501–06022	SPRING, COMPRESSION	1					
7	1FP–E8120–00	SHIFT LEVER ASSY	1					
8	90508–26815	.SPRING, TORSION	1					
9	1S8–E8531–00	BAR, SHIFT FORK GUIDE 1	1					
10	90501–06800	SPRING, COMPRESSION	2					
11	1JD–E8511–00	FORK, SHIFT 1	1					
12	1JD–E8512–00	FORK, SHIFT 2	1					

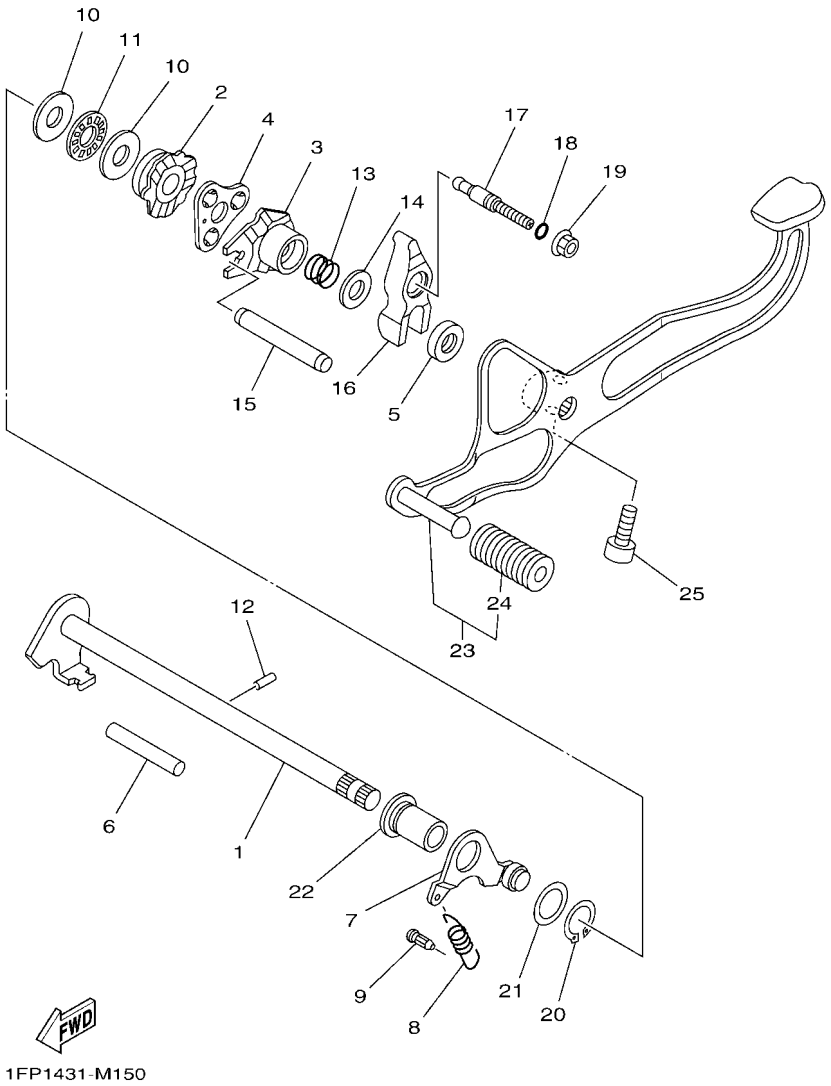

FIG. 15 SHIFT SHAFT

REF. NO.	PART NO.	DESCRIPTION	BBY1					REMARKS
1	1FP–E8101–00	SHIFT SHAFT ASSY	1					
2	1FP–E8179–01	GUIDE	1					
3	1FP–E8172–01	GUIDE, SHIFT	1					
4	1FP–E8181–00	HOLDER, PAWL	1					
5	93102–12891	OIL SEAL	1					
6	93608–50149	PIN, DOWEL	1					
7	1FP–E8140–00	STOPPER LEVER ASSY	1					
8	1FP–E8337–10	SPRING	1					
9	5HV–E6346–00	HOOK, SPRING	1					
10	90201–127F4	WASHER, PLATE	2					
11	93340–212Y2	BEARING	1					
12	93604–10011	PIN, DOWEL	1					
13	90501–125E9	SPRING, COMPRESSION	1					
14	90201–12824	WASHER, PLATE	1					
15	1S8–E8173–00	PIN, SHIFT	1					
16	1VP–E817A–00	ARM, SHIFT 3	1					
17	1FC–E8186–10	SCREW, ADJUSTING	1					UR
	5D9–E8186–00	SCREW, ADJUSTING	1					UR
18	93210–068E9	O-RING	1					
19	95702–06500	NUT, FLANGE	1					
20	99009–17400	CIRCLIP	1					
21	90201–178D3	WASHER, PLATE	1					
22	1FP–E8699–00	BOSS 1	1					
23	BBY–E8110–00	SHIFT PEDAL ASSY	1					
24	5H3–E8113–00	.COVER, SHIFT PEDAL	1					
25	91337–08020	BOLT	1					

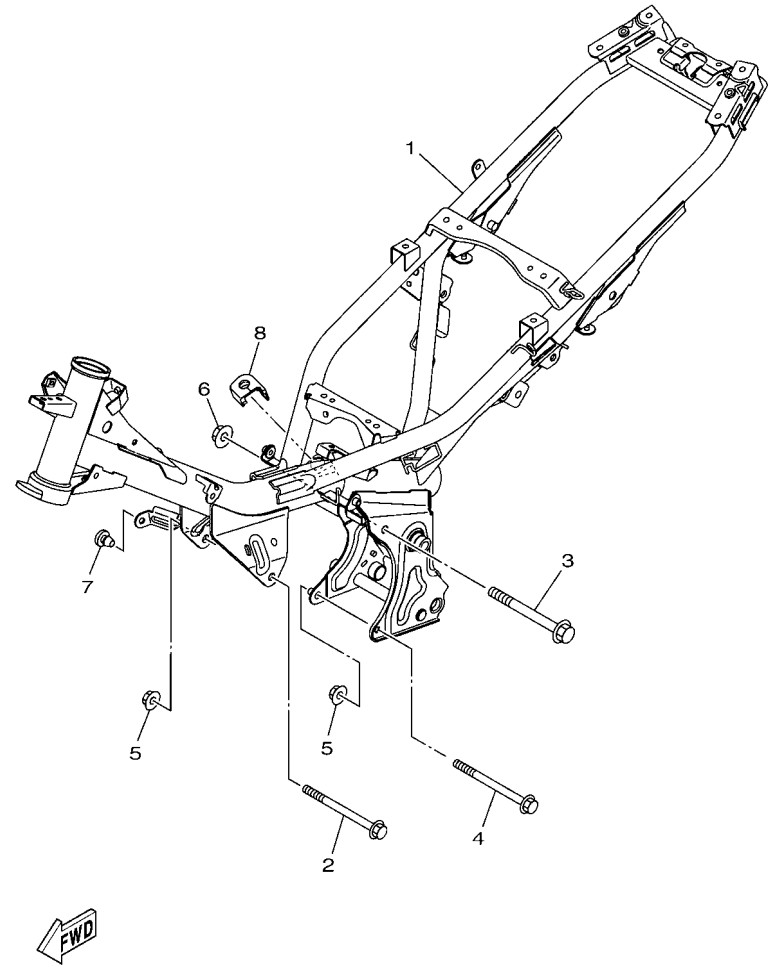

BBK1422-W150

FIG. 16 FRAME

REF. NO.	PART NO.	DESCRIPTION	BBY1					REMARKS
1	BBY–F1110–00	FRAME COMP.	1					
2	90105–088E0	BOLT, FLANGE	1					
3	95812–10120	BOLT, FLANGE	1					
4	90105–088D9	BOLT, FLANGE	1					
5	90179–08818	NUT	2					
6	90179–10805	NUT	1					
7	90338–07800	PLUG	1					
8	1FC–F117G–00	PROTECTOR	1					

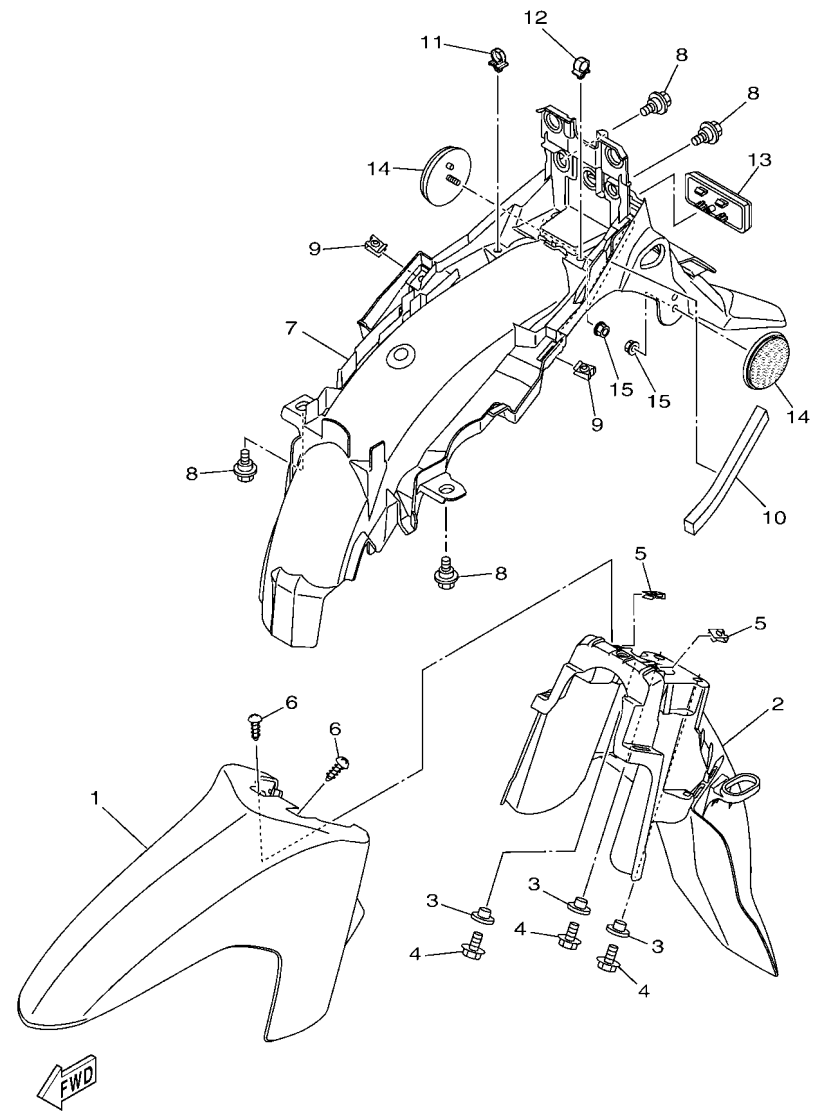

BBY1440-X170

FIG. 17 FENDER

REF. NO.	PART NO.	DESCRIPTION	BBY1					REMARKS
1	BBY–F1511–00–P0	FENDER, FRONT	1					UR FOR RM7
	BBY–F1511–00–P1	FENDER, FRONT	1					UR FOR VPBC5
	BBY–F1511–00–P3	FENDER, FRONT	1					UR FOR CM6
2	BBK–F1556–00	FENDER, FRONT 2	1					
3	90387–06857	COLLAR	3					
4	97022–06020	BOLT, HEXAGON	3					
5	90183–05807	NUT, SPRING	2					
6	97702–50012	SCREW, TAPPING	2					
7	BBY–F1611–00	FENDER, REAR	1					
8	90109–068B4	BOLT	4					
9	90183–05807	NUT, SPRING	2					
10	90520–15820	DAMPER, PLATE	1					
11	90464–12001	CLAMP	1					
12	90464–08008	CLAMP	1					
13	55D–H5130–00	REAR REFLECTOR ASSY	1					UR
	BE1–H5130–00	REAR REFLECTOR ASSY	1					UR
14	2FC–H5111–00	REFLECTOR, 1	2					
15	90185–05803	NUT, SELF-LOCKING	2					

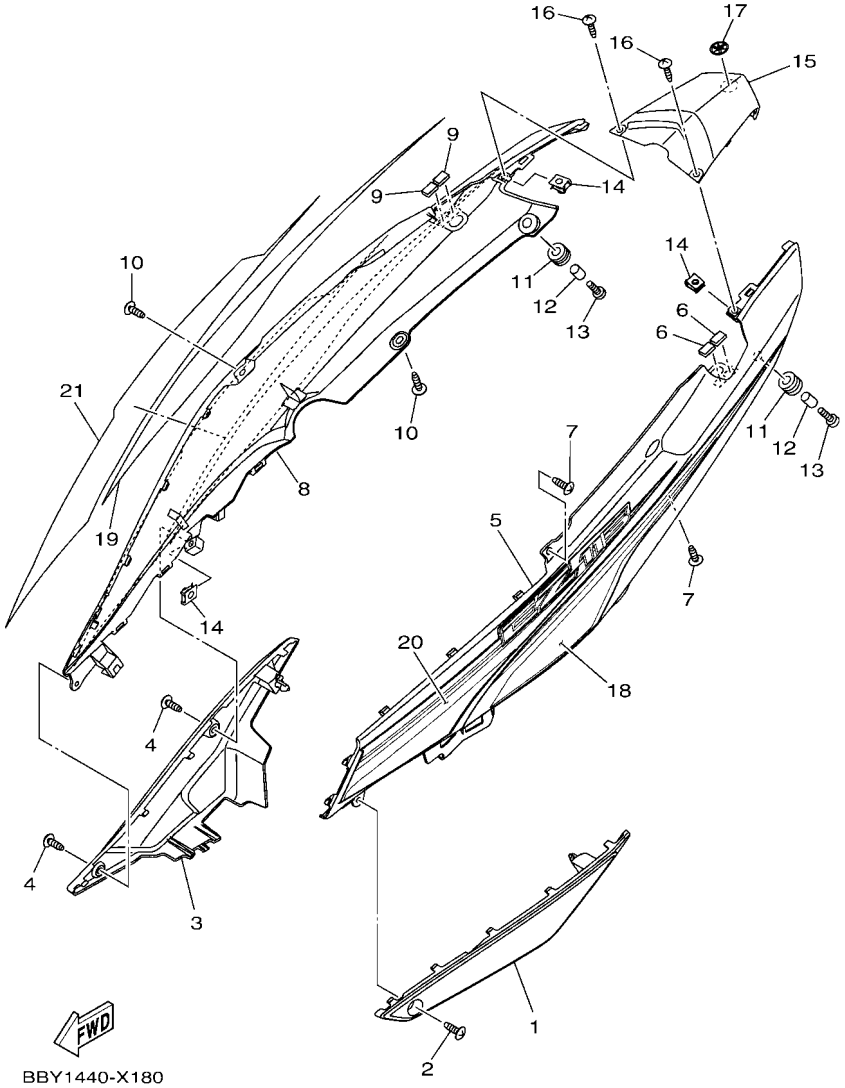

FIG. 18 SIDE COVER

REF. NO.	PART NO.	DESCRIPTION	BBY1					REMARKS
1	BBK–F1711–00	COVER, SIDE 1	1					
2	97702–50016	SCREW,TAPPING	1					
3	BBK–F1721–00	COVER, SIDE 2	1					
4	97702–50016	SCREW,TAPPING	2					
5	BBY–F1731–00–P0	COVER, SIDE 3	1					SMX
6	90520–02005	DAMPER, PLATE	2					
7	97702–50016	SCREW,TAPPING	2					
8	BBY–F1741–00–P0	COVER, SIDE 4	1					SMX
9	90520–02005	DAMPER, PLATE	2					
10	97702–50016	SCREW,TAPPING	2					
11	90480–12808	GROMMET	2					
12	90387–068L6	COLLAR	2					
13	90154–05006	SCREW, BINDING	2					
14	90183–05807	NUT, SPRING	3					
15	BBY–F172X–00–P0	COVER, TAILLIGHT	1					SMX
16	97702–50016	SCREW,TAPPING	2					
17	5PV–F836D–00	TUNING FORK MARK	1					
18	BBY–F173E–00	GRAPHIC 1	1					UR FOR RM7
	BBY–F173E–10	GRAPHIC 1	1					UR FOR VPBC5
	BBY–F173E–20	GRAPHIC 1	1					UR FOR CM6
19	BBY–F173F–00	GRAPHIC 2	1					UR FOR RM7
	BBY–F173F–10	GRAPHIC 2	1					UR FOR VPBC5
	BBY–F173F–20	GRAPHIC 2	1					UR FOR CM6
20	BBY–F174G–00	GRAPHIC 3	1					UR FOR RM7
	BBY–F174G–10	GRAPHIC 3	1					UR FOR VPBC5
	BBY–F174G–20	GRAPHIC 3	1					UR FOR CM6
21	BBY–F174H–00	GRAPHIC 4	1					UR FOR RM7

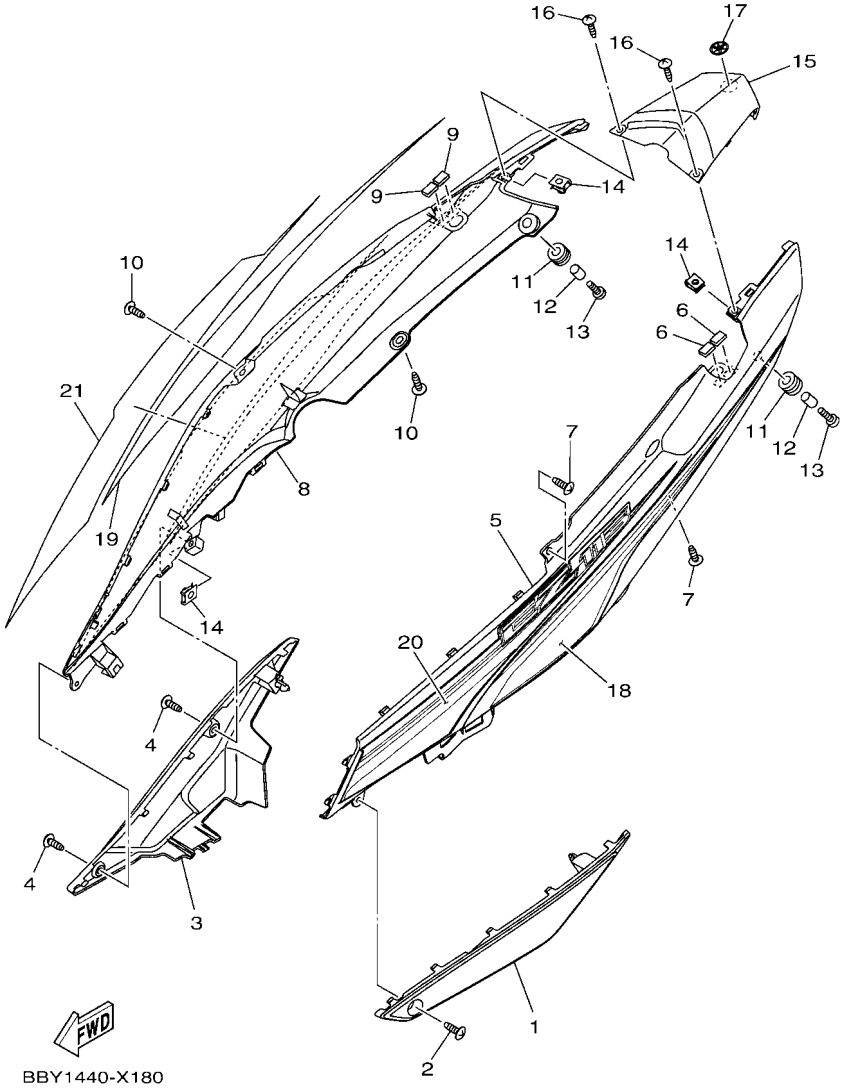

FIG. 18 SIDE COVER

REF. NO.	PART NO.	DESCRIPTION	BBY1					REMARKS
21	BBY–F174H–10	GRAPHIC 4	1					UR FOR VPBC5
	BBY–F174H–20	GRAPHIC 4	1					UR FOR CM6

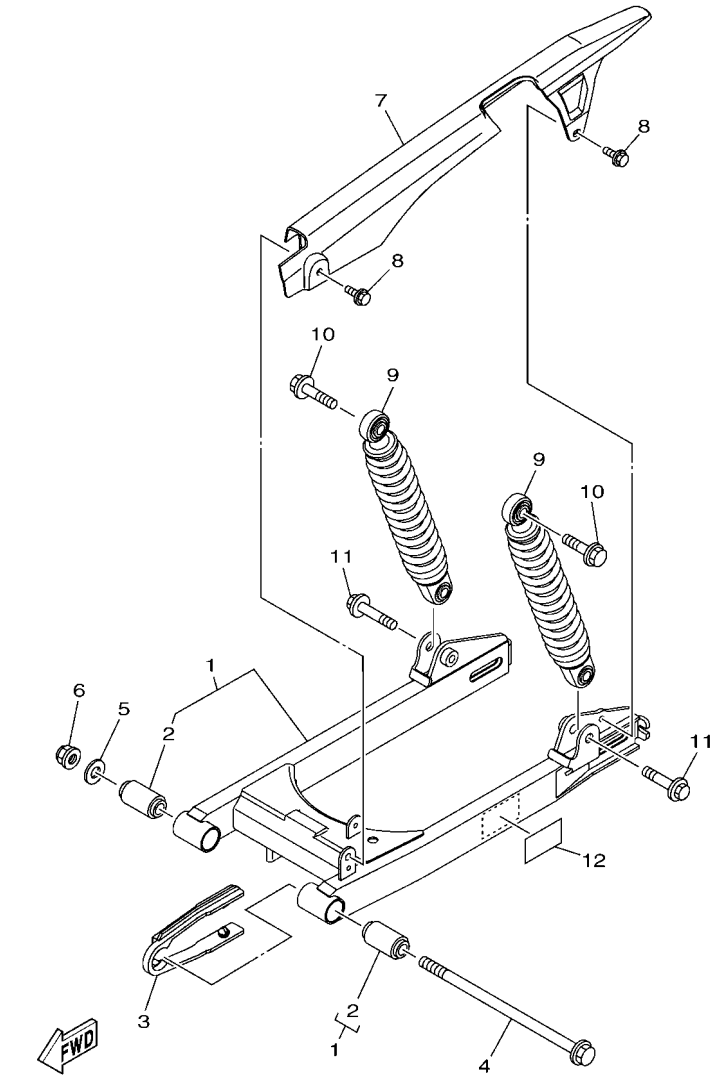

BBY1440-X190

FIG. 19 REAR ARM & SUSPENSION

REF. NO.	PART NO.	DESCRIPTION	BBY1					REMARKS
1	BBY–F2100–00–WN	REAR ARM ASSY	1					CIS
2	5B9–F2123–00	.BUSH 1	2					
3	BBY–F2151–00	SEAL, GUARD	1					
4	1FC–F2141–00	SHAFT, PIVOT	1					
5	90201–12834	WASHER, PLATE	1					
6	95602–12200	NUT, SELF-LOCKING	1					
7	1FD–F2311–00	CASE, CHAIN	1					
8	90119–06117	BOLT, WITH WASHER	2					
9	BBY–F2210–00	SHOCK ABSORBER ASSY, REAR	2					
10	90105–10879	BOLT, FLANGE	2					
11	90105–10882	BOLT, FLANGE	2					
12	2WB–F1668–00	LABEL, TIRE	1					

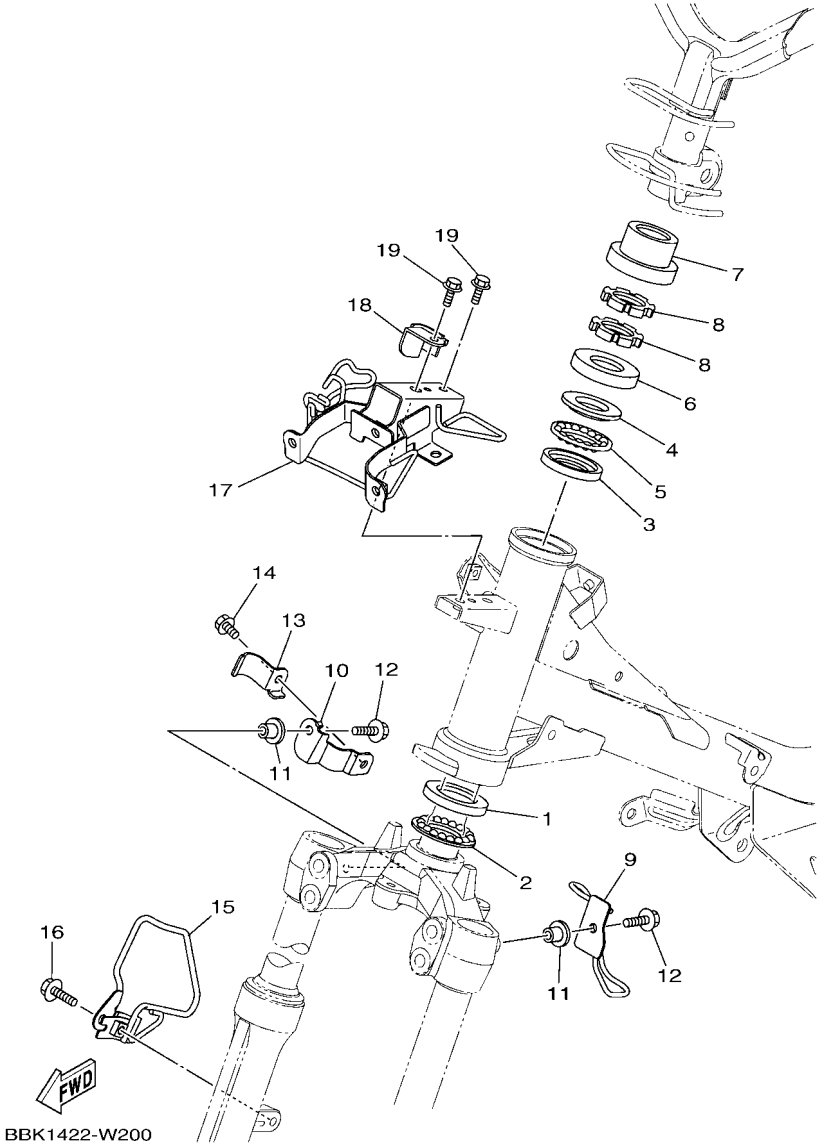

FIG. 20 STEERING

REF. NO.	PART NO.	DESCRIPTION	BBY1					REMARKS
1	1KL–F3412–10	RACE, BALL 2	1					
2	5VL–F341E–10	RETAINER, BALL BEARING	1					
3	4RT–F3412–10	RACE, BALL 2	1					
4	4RT–F3411–10	RACE, BALL 1	1					
5	1P6–F341E–10	RETAINER, BALL BEARING	1					
6	2WB–F3416–00	COVER, BALL RACE 2	1					
7	4UV–F3415–00	COVER, BALL RACE 1	1					
8	90179–25002	NUT	2					
9	BBY–F3317–00	HOLDER, CABLE	1					
10	1FD–F5875–00	HOLDER, BRAKE HOSE 1	1					
11	90387–06857	COLLAR	2					
12	95E32–06016	BOLT, FLANGE DEEP RECESS	2					
13	1FD–F5886–00	HOLDER, BRAKE HOSE	1					
14	95E32–06010	BOLT, FLANGE DEEP RECESS	1					
15	BBY–F331E–00	GUIDE, CABLE	1					
16	95E32–06020	BOLT, FLANGE DEEP RECESS	1					
17	BBY–F331A–00	STAY	1					
18	BBY–F3874–00	HOLDER, WIRE	1					
19	95D02–06012	BOLT, FLANGE DEEP RECESS	2					

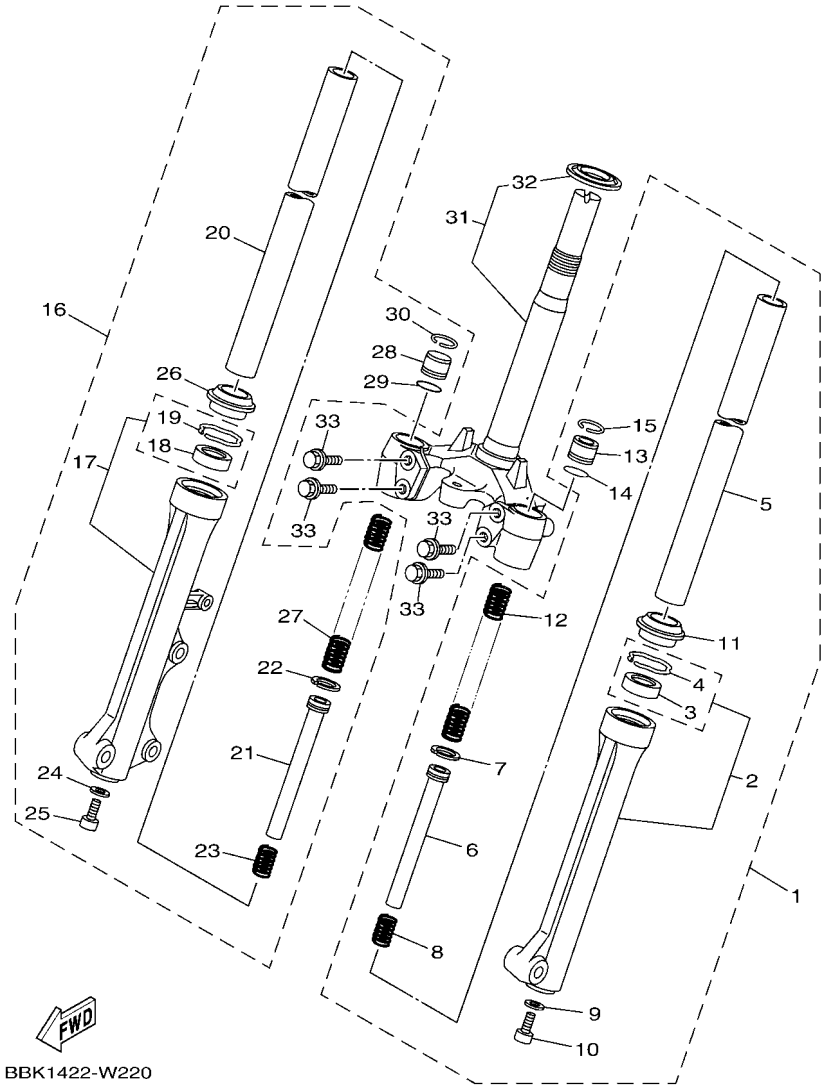

FIG. 21 FRONT FORK

REF. NO.	PART NO.	DESCRIPTION	BBY1					REMARKS
1	BBY–F3102–00	DEMPER ASSY. (L)	1					
2	BBY–F3126–00	.TUBE, OUTER (L.H)	1					
3	4UV–F3145–00	..OIL SEAL	1					
4	5P0–F3156–00	..RING, SNAP	1					
5	1FC–F3110–10	.INNER TUBE COMP.1	1					
6	31D–F3170–00	.CYLINDER COMP., FRONT FORK	1					
7	2JG–F3157–00	.RING, PISTON	1					
8	31D–F3152–00	.SPRING, SUB	1					
9	509–F3158–L0	.GASKET	1					
10	31D–F3181–50	.BOLT, HEXAGON SOCKET HEAD	1					
11	5LL–F3144–00	.SEAL, DUST	1					
12	1FC–F3141–10	.SPRING, FRONT FORK	1					
13	1FC–F3111–10	.BOLT, CAP	1					
14	2JG–F3147–00	.O-RING	1					
15	31D–F3153–00	.RING, SNAP	1					
16	BBY–F3103–00	DAMPER ASSY. (R)	1					
17	BBY–F3136–00	.TUBE, OUTER 2	1					
18	4UV–F3145–00	..OIL SEAL	1					
19	5P0–F3156–00	..RING, SNAP	1					
20	1FC–F3110–10	.INNER TUBE COMP.1	1					
21	31D–F3170–00	.CYLINDER COMP., FRONT FORK	1					
22	2JG–F3157–00	.RING, PISTON	1					
23	31D–F3152–00	.SPRING, SUB	1					
24	509–F3158–L0	.GASKET	1					
25	31D–F3181–50	.BOLT, HEXAGON SOCKET HEAD	1					
26	5LL–F3144–00	.SEAL, DUST	1					
27	1FC–F3141–10	.SPRING, FRONT FORK	1					

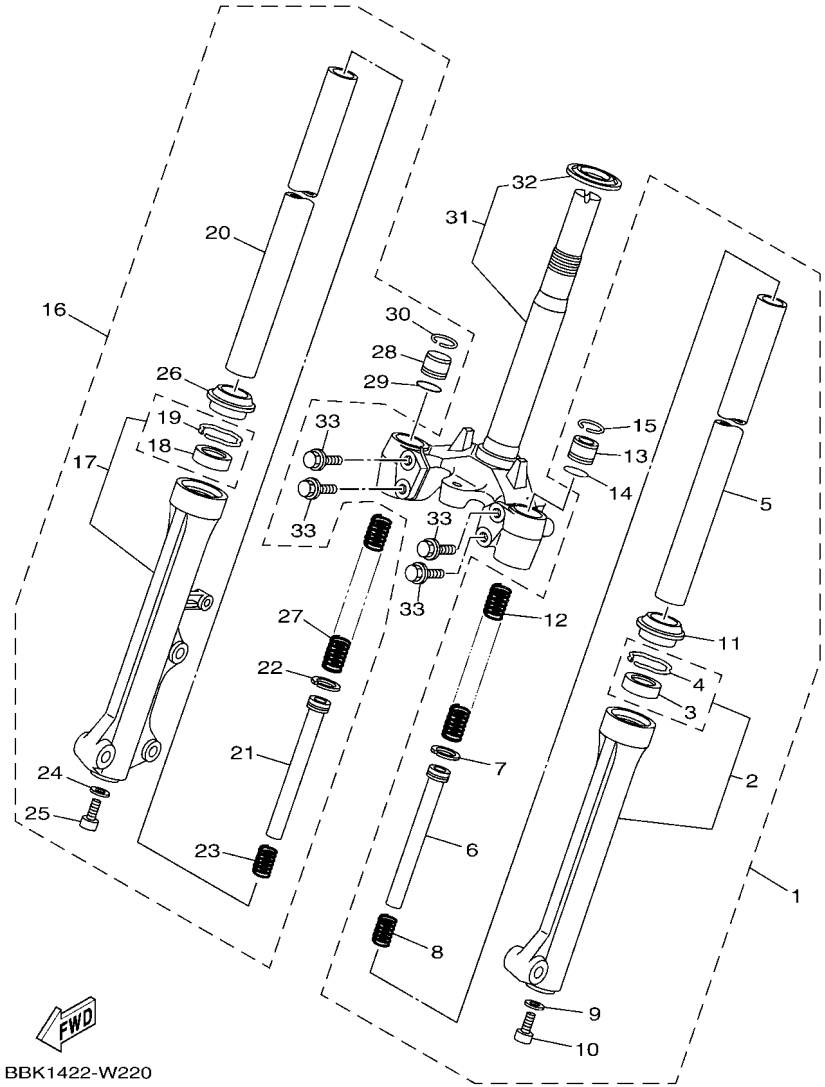

FIG. 21 FRONT FORK

REF. NO.	PART NO.	DESCRIPTION	BBY1					REMARKS
28	1FC–F3111–10	.BOLT, CAP	1					
29	2JG–F3147–00	.O-RING	1					
30	31D–F3153–00	.RING, SNAP	1					
31	BBK–F3340–00	UNDER BRACKET COMP.	1					
32	4FP–F3411–10	.RACE, BALL 1	1					
33	31D–F3346–00	BOLT 1	4					

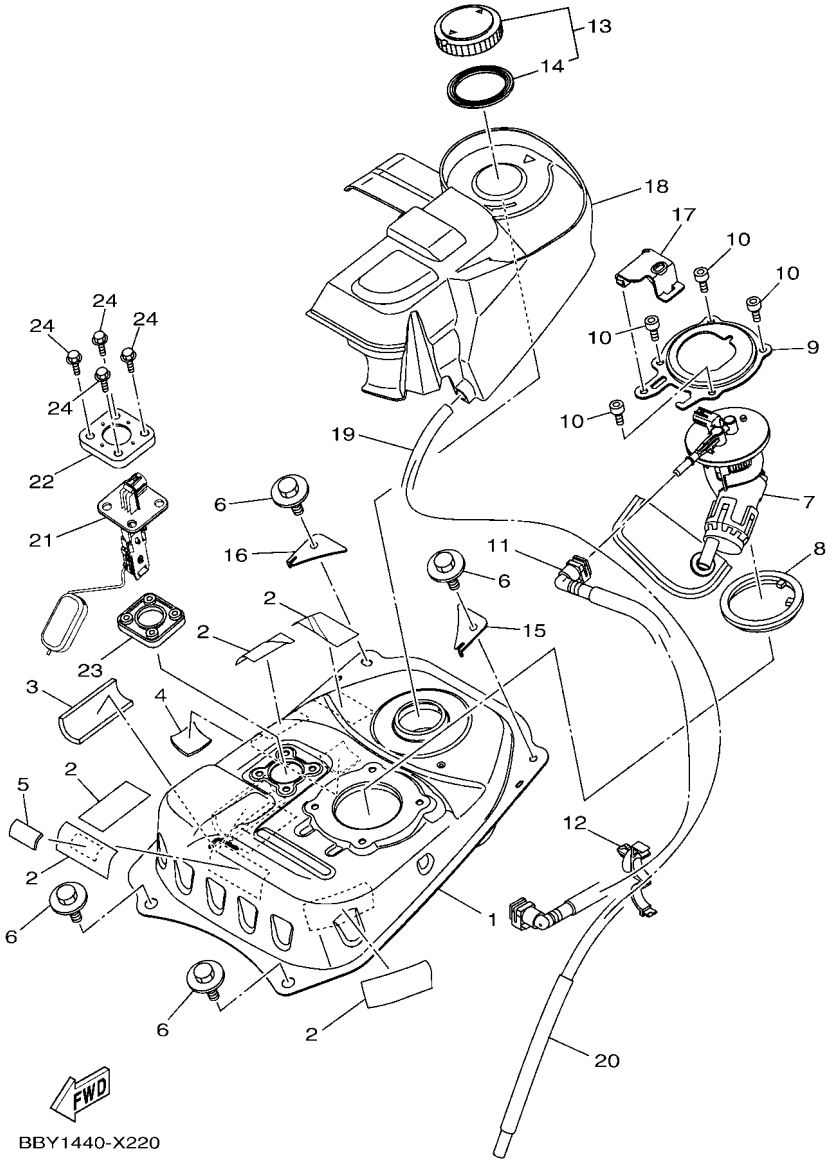

FIG. 22 FUEL TANK

REF. NO.	PART NO.	DESCRIPTION	BBY1					REMARKS
1	BBY–F4110–00	FUEL TANK COMP.	1					
2	B4U–F414G–00	SEAL	5					
3	1S8–F1746–00	DAMPER	1					
4	90520–02806	DAMPER, PLATE	1					
5	16S–H2126–00	PAD, BATTERY	1					
6	90119–068A2	BOLT, WITH WASHER	4					
7	1DY–E3907–30	FUEL PUMP COMP.	1					
8	1DB–F414G–01	SEAL	1					
9	1VP–F4491–00	BRACKET, FUEL PUMP	1					
10	91332–05010	BOLT	4					
11	BBK–E3971–00	PIPE, FUEL 1	1					
12	90464–17003	CLAMP	1					
13	4YY–F4610–00	CAP ASSY	1					
14	4YY–F4612–00	.PACKING, CAP	1					
15	1FC–F4186–00	WASHER, SPECIAL	1					
16	1FC–F4187–00	WASHER, SPECIAL	1					
17	1PB–E3993–01	COVER, CONTROL RACK	1					
18	BBY–F4217–00	COVER	1					
19	BBY–F417E–00	TUBE, DRAIN	1					
20	BBY–F4327–00	PROTECTOR, PIPE	1					
21	1FC–H5752–10	SENDER	1					
22	5BU–H5757–00	RETAINER	1					
23	5BU–H5753–01	GASKET, SENDER UNIT	1					
24	90119–05071	BOLT, WITH WASHER	4					

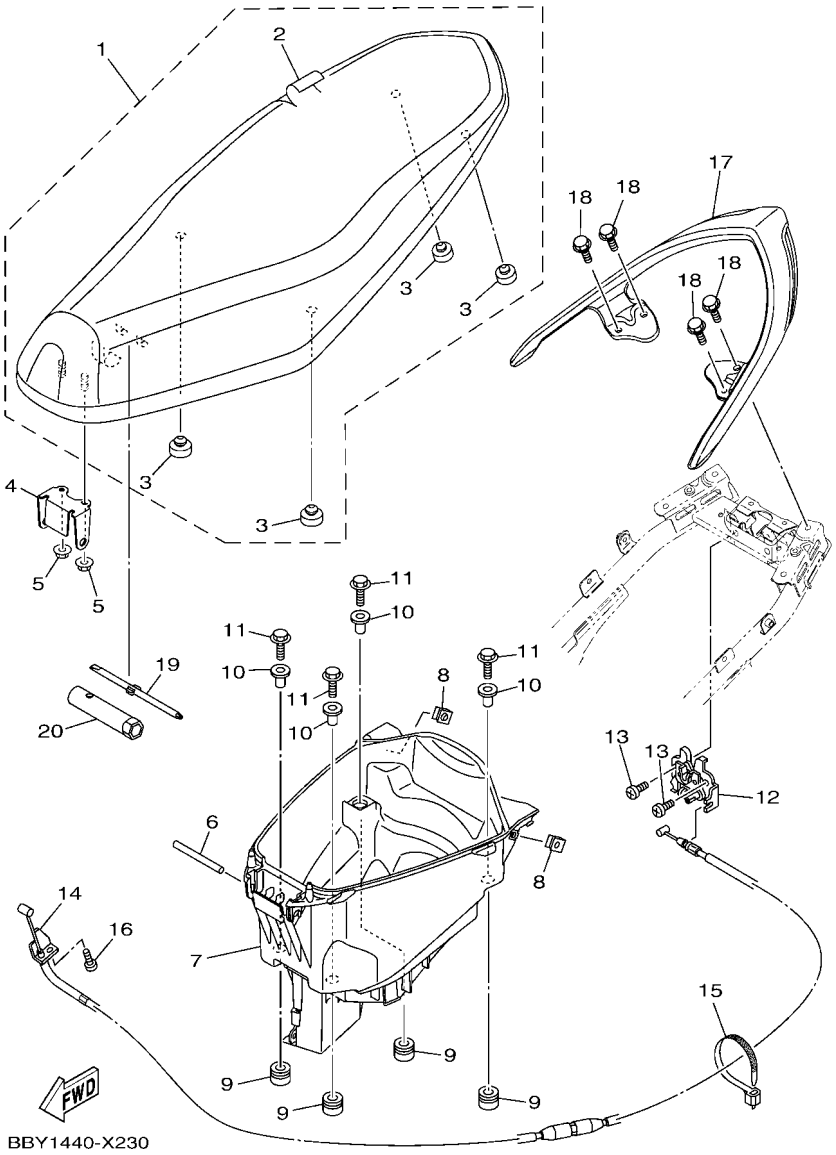

FIG. 23 SEAT

REF. NO.	PART NO.	DESCRIPTION	BBY1					REMARKS
1	BBK–F4730–00	DOUBLE SEAT ASSY	1					
2	BBK–F470F–00	.SEAT COVER COMP.	1					
3	BJ7–F4741–00	.PAD, SEAT	4					
4	BBY–F4726–00	HINGE, SEAT	1					
5	95702–06500	NUT, FLANGE	2					
6	2WB–F4727–00	PIN, SEAT FITTING	1					
7	BBK–F473R–00	BOX 1	1					
8	90183–05807	NUT, SPRING	2					
9	90480–14806	GROMMET	4					
10	1FC–F412G–00	COLLAR	4					
11	95E32–06025	BOLT, FLANGE DEEP RECESS	4					
12	1FC–F4780–00	SEAT LOCK ASSY	1					
13	98502–06012	SCREW, PAN HEAD	2					
14	BBK–F478E–00	CABLE, SEAT LOCK	1					
15	90464–25003	CLAMP	1					
16	98502–05010	SCREW, PAN HEAD	1					
17	BBY–F4773–00–P0	HANDLE, SEAT	1					SMX
18	95D32–06016	BOLT, FLANGE DEEP RECESS	4					
19	5HU–F8152–00	DRIVER	1					
20	B17–F814F–00	BOX, SPARK PLUG	1					

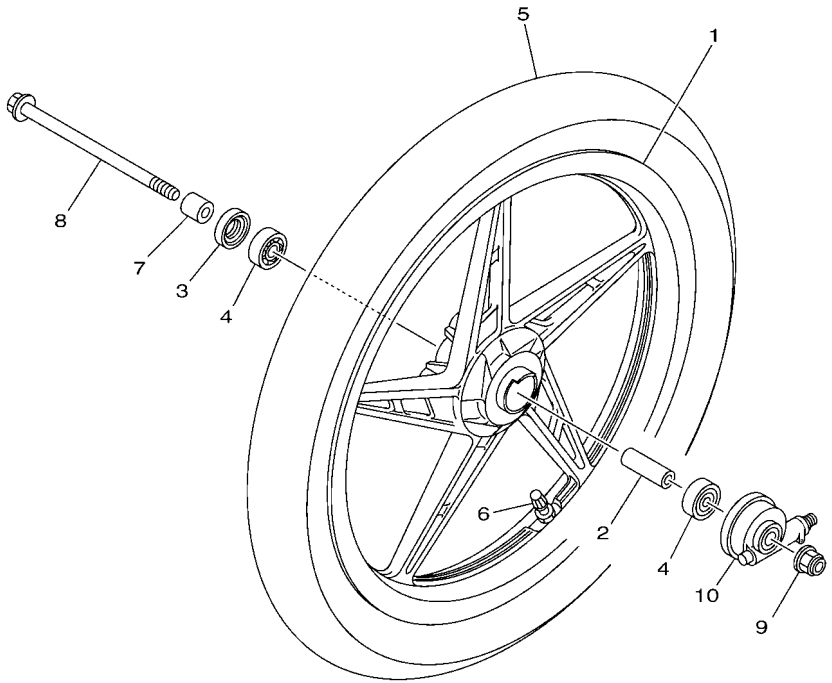

BBY1440-X240

FIG. 24 FRONT WHEEL

REF. NO.	PART NO.	DESCRIPTION	BBY1					REMARKS
1	1S8–F5168–00–33	CAST WHEEL, FRONT	1					YB
2	90560–10292	SPACER	1					
3	93106–20816	OIL SEAL	1					
4	93306–300YF	BEARING	2					
5	94107–17872	TIRE (70/90-17 M/C 38P V420F)	1					VEE RUBBER
6	93900–00817	VALVE, RIM (TR412)	1					
7	90387–10277	COLLAR	1					
8	3AY–F5181–01	AXLE, WHEEL	1					
9	95602–10200	NUT, SELF-LOCKING	1					
10	5TP–F5190–01	GEAR UNIT ASSY	1					

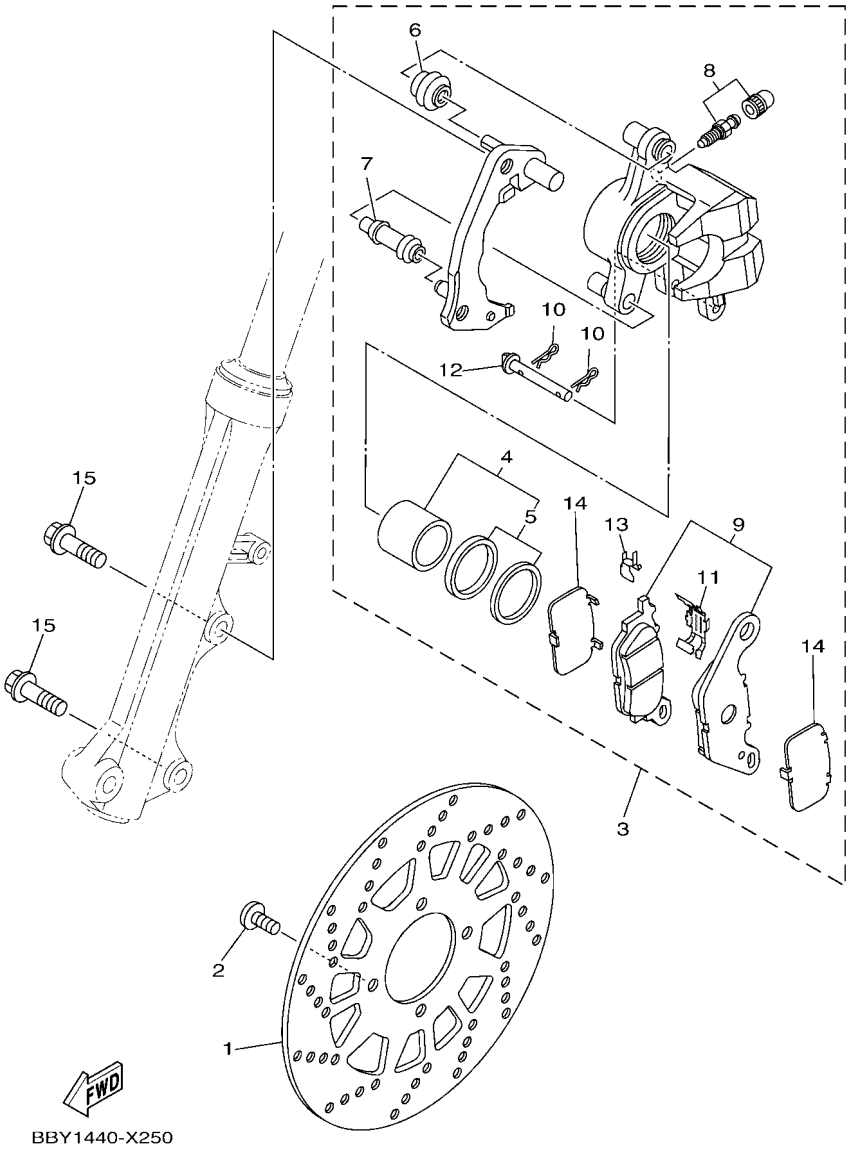

FIG. 25 FRONT BRAKE CALIPER

REF. NO.	PART NO.	DESCRIPTION	BBY1					REMARKS
1	31D–F582U–00	DISK, BRAKE (RIGHT)	1					
2	90111–08853	BOLT, HEXAGON SOCKET BUTTON	4					
3	31B–F580U–03	CALIPER ASSY (RIGHT)	1					
4	5P0–F5802–00	.PISTON ASSY, CALIPER	1					
5	5YP–F5803–50	..CALIPER SEAL KIT	1					
6	5YP–F5917–00	.BOOT, CALIPER	1					
7	5YP–F5937–00	.BOOT 2	1					
8	4C9–W0048–00	.BLEED SCREW KIT	1					
9	5D9–F5805–01	.BRAKE PAD KIT	1					
10	5YP–F5925–01	.CLIP	2					
11	5P0–F5919–01	.SUPPORT, PAD	1					
12	5YP–F5924–00	.PIN, PAD	1					
13	5YP–F5939–00	.CLIP, PAD	1					
14	5P0–F5827–00	.SHIM, CALIPER	2					
15	90105–10831	BOLT, FLANGE	2					

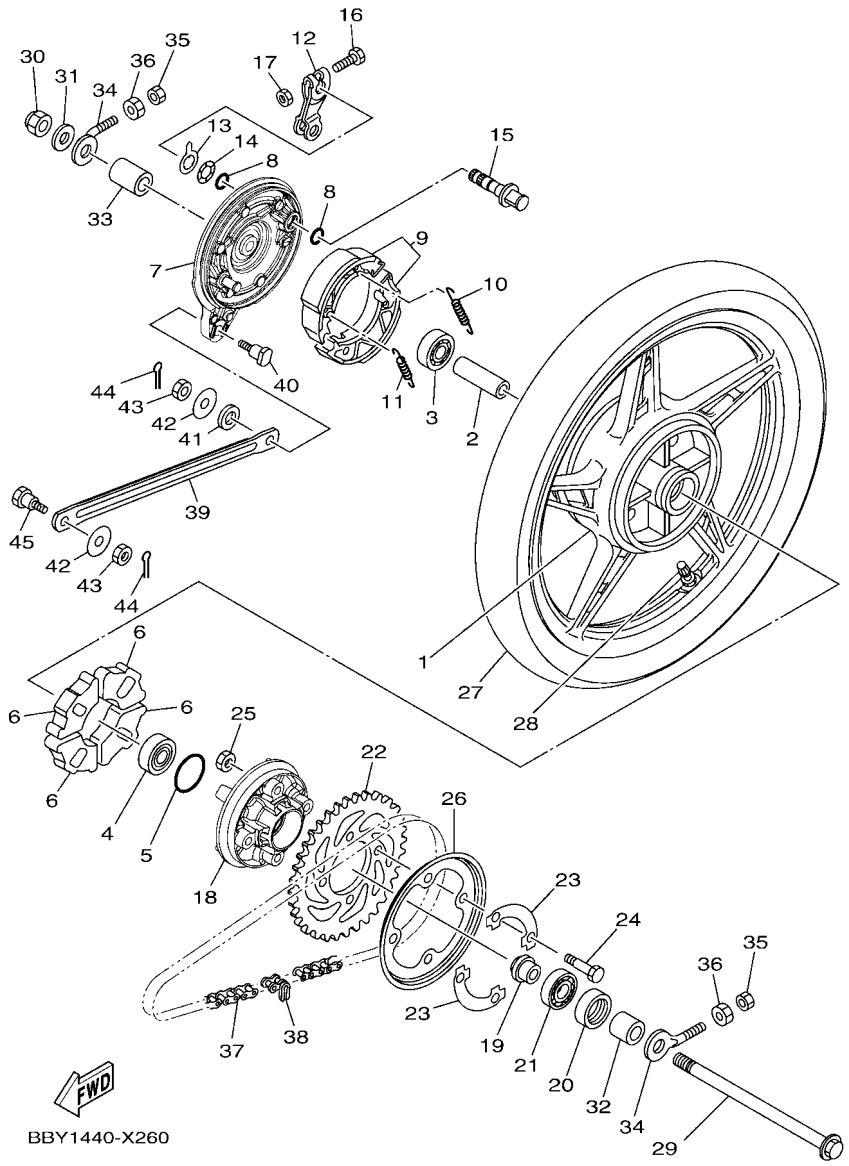

FIG. 26 REAR WHEEL

REF. NO.	PART NO.	DESCRIPTION	BBY1					REMARKS
1	1S8–F5338–00–33	CAST WHEEL, REAR	1					YB
2	90560–12145	SPACER	1					
3	93306–301Y8	BEARING	1					
4	93306–301YM	BEARING	1					
5	93210–41041	O-RING	1					
6	1VP–F5364–00	DAMPER	4					
7	31D–F5321–00–33	PLATE, BRAKE SHOE	1					YB
8	93210–14104	O-RING	2					
9	31D–F530K–00	BRAKE SHOE SET	1					
10	90506–12001	SPRING, TENSION	1					
11	90506–15001	SPRING, TENSION	1					
12	31D–F5355–00	LEVER, CAMSHAFT	1					
13	31D–F533A–00	PLATE, INDICATOR	1					
14	90206–14093	WASHER, WAVE	1					
15	31D–F5351–00	CAMSHAFT	1					
16	97027–06035	BOLT, HEXAGON	1					
17	95307–06600	NUT	1					
18	1VP–F5366–00	CLUTCH, HUB	1					
19	90387–12868	COLLAR	1					
20	93106–26815	OIL SEAL	1					
21	93306–004XV	BEARING	1					
22	31D–F5440–01	SPROCKET, DRIVEN (40T)	1					
23	BBY–F5412–00	WASHER	2					
24	90101–08847	BOLT	4					
25	90179–08639	NUT	4					
26	BBY–F5414–00	SPACER	1					
27	94108–17867	TIRE (80/90-17 M/C 50P V420R)	1					VEE RUBBER

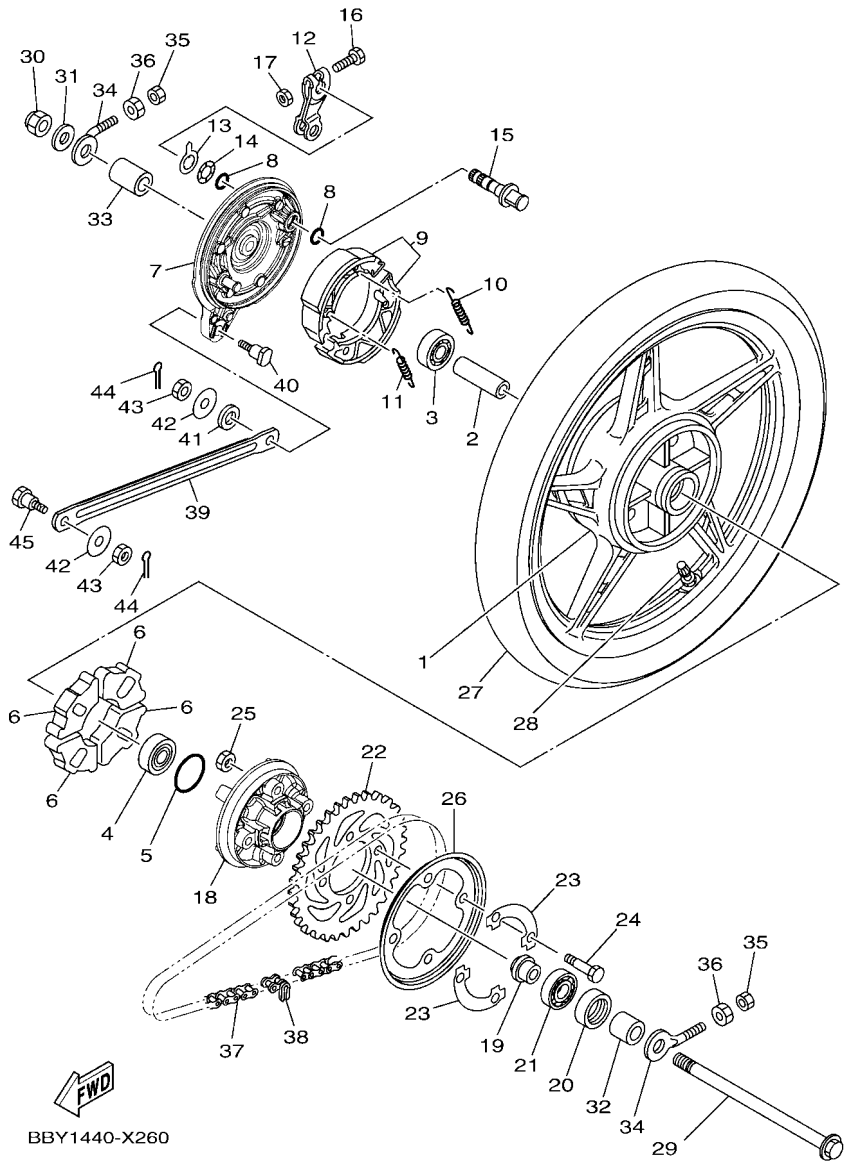

FIG. 26 REAR WHEEL

REF. NO.	PART NO.	DESCRIPTION	BBY1					REMARKS
28	93900–00817	VALVE, RIM (TR412)	1					
29	1FC–F5381–10	AXLE, WHEEL	1					
30	90185–12804	NUT, SELF-LOCKING	1					
31	90201–12688	WASHER, PLATE	1					
32	16S–F5383–00	COLLAR, WHEEL	1					
33	90387–12872	COLLAR	1					
34	BDK–F5388–00	PULLER, CHAIN 1	2					
35	90170–06809	NUT	2					
36	95302–06600	NUT, HEXAGON	2					
37	94568–D1105	CHAIN (RK-M 428SB X 105L)	1					
38	94668–D1001	JOINT, CHAIN (RK-M 428M)	1					
39	31D–F5371–00	BAR, TENSION	1					
40	90109–08828	BOLT	1					
41	90202–10800	WASHER, PLATE	1					
42	90201–081J7	WASHER, PLATE	2					
43	95304–08700	NUT	2					
44	91402–20012	PIN, COTTER	2					
45	31D–F5373–00	BOLT, TENSION BAR	1					

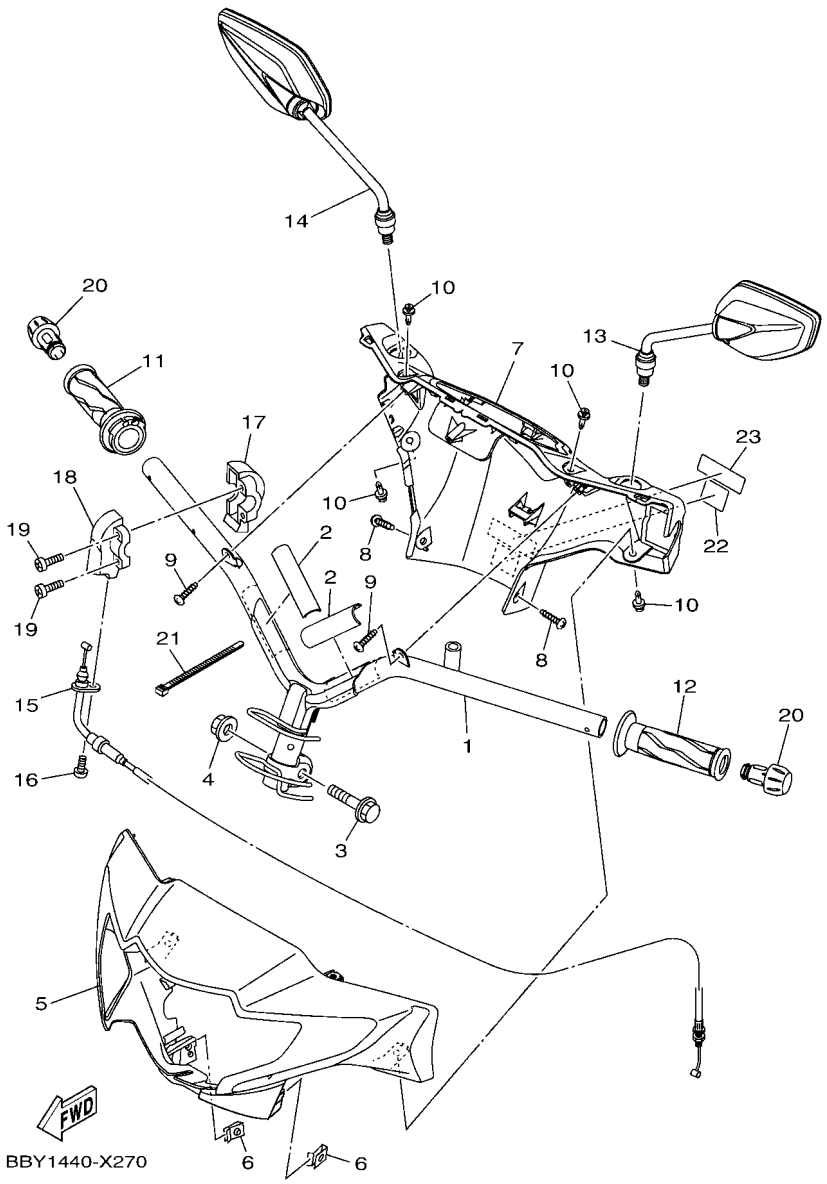

FIG. 27 STEERING HANDLE & CABLE

REF. NO.	PART NO.	DESCRIPTION	BBY1					REMARKS
1	BBY–F6110–00	HANDLE COMP.	1					
2	90520–02829	DAMPER, PLATE	2					
3	90105–10295	BOLT, FLANGE	1					
4	90185–10011	NUT, SELF-LOCKING	1					
5	BBY–F6143–00–P0	COVER, HANDLE UPPER 1	1					UR FOR RM7
	BBY–F6143–00–P1	COVER, HANDLE UPPER 1	1					UR FOR VPBC5
	BBY–F6143–00–P3	COVER, HANDLE UPPER 1	1					UR FOR CM6
6	90183–05807	NUT, SPRING	2					
7	BBK–F6145–00	COVER, HANDLE UPPER 2	1					
8	97702–50012	SCREW, TAPPING	2					
9	97702–50016	SCREW,TAPPING	2					
10	90269–06812	RIVET	4					
11	B17–F6240–02	GRIP ASSY	1					
12	1VP–F6241–00	GRIP	1					
13	2CB–F6280–20	REAR VIEW MIRROR ASSY (LEFT)	1					
14	2CB–F6290–20	REAR VIEW MIRROR ASSY (RIGHT)	1					
15	BBY–F6301–00	THROTTLE CABLE ASSY	1					
16	92012–05016	BOLT, BUTTON HEAD	1					
17	1FC–F6281–10	CAP, GRIP UPPER	1					
18	1FC–F6282–10	CAP, GRIP UNDER	1					
19	98502–05025	SCREW, PAN HEAD	2					
20	1VB–F6246–00	END, GRIP	2					
21	90464–36800	CLAMP	1					
22	31D–F1568–30	LABEL, WARNING	1					
23	1VP–F815P–00	LABEL, NOTICE 1	1					

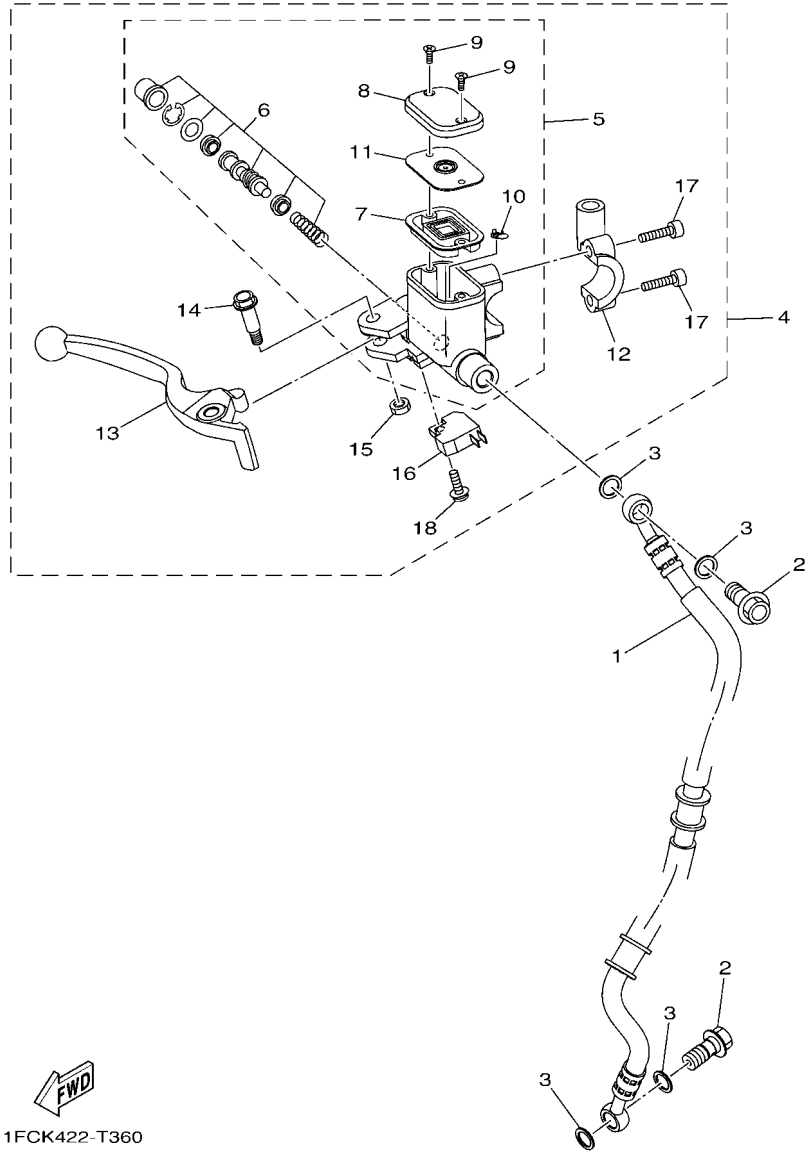

FIG. 28 FRONT MASTER CYLINDER

REF. NO.	PART NO.	DESCRIPTION	BBY1					REMARKS
1	1FC–F5872–30	HOSE, BRAKE 1	1					
2	90401–10812	BOLT, UNION	2					
3	90201–10118	WASHER, PLATE	4					
4	2ND–F583T–03	MASTER CYLINDER ASSY	1					
5	2ND–F5870–00	.MASTER CYLINDER SUB ASSY	1					
6	5P0–F580A–00	..CYLINDER KIT, MASTER	1					
7	2ND–F5854–00	..DIAPHRAGM, RESERVOIR	1					
8	2ND–F5852–00	..CAP, RESERVOIR	1					
9	36Y–2589H–00	..SCREW	2					
10	3RW–25889–00	..SEPARATOR	1					
11	2ND–F5855–00	..BUSH,DIAPHRAGM	1					
12	5TL–F5867–11	.BRACKET,MASTER CYLINDER(BLACK)	1					
13	2ND–H3922–00	.LEVER 2	1					
14	90109–06577	.BOLT	1					
15	95602–06100	.NUT, SELF-LOCKING	1					
16	2DP–H3980–01	.FRONT STOP SWITCH ASSY	1					
17	91317–06025	.BOLT, HEXAGON SOCKET HEAD	2					
18	97602–04312	.SCREW, PAN HEAD WITH WASHER	1					

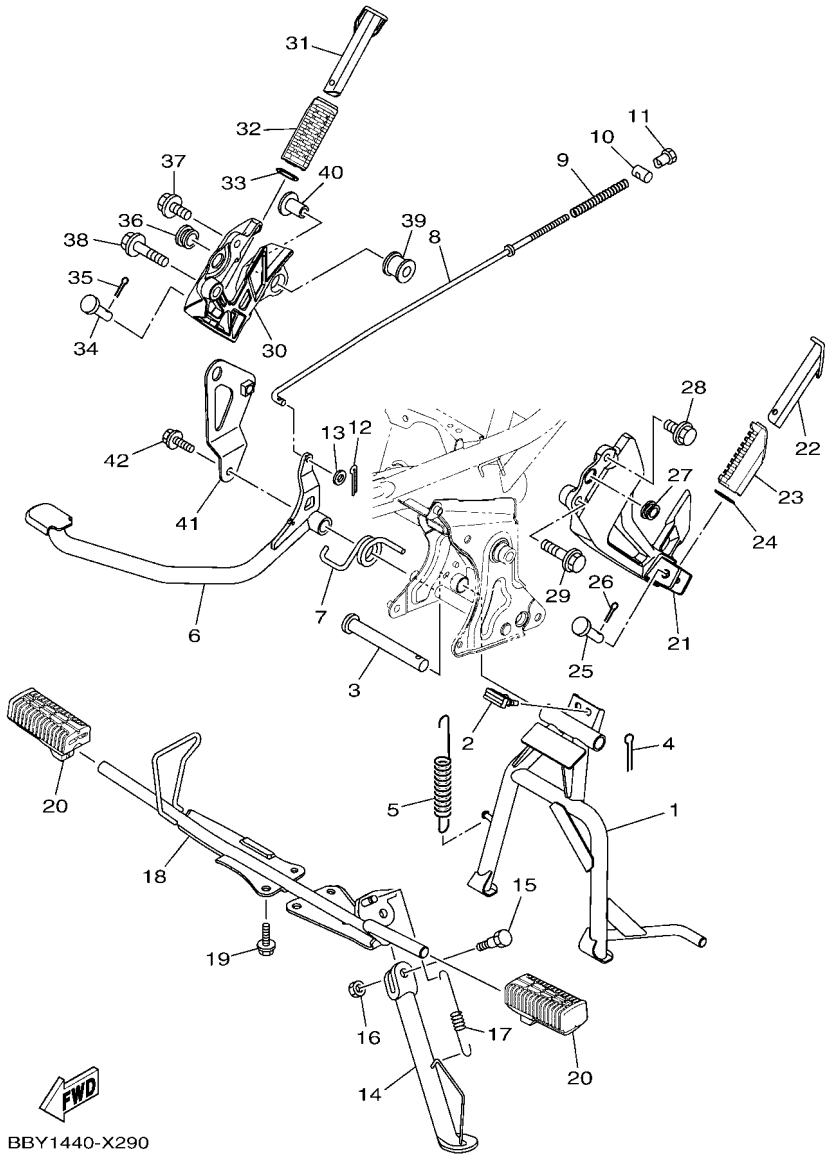

FIG. 29 STAND & FOOTREST

REF. NO.	PART NO.	DESCRIPTION	BBY1					REMARKS
1	BBY–F7111–00	STAND, MAIN	1					
2	1FC–F7114–11	STOPPER, MAIN STAND	1					
3	31D–F7112–00	SHAFT, MAIN STAND	1					
4	91490–20030	PIN. COTTER	1					
5	90506–35806	SPRING, TENSION	1					
6	BBY–F7211–00	PEDAL, BRAKE	1					
7	1FC–F7426–00	SPRING, RETURN	1					
8	5D9–F7231–00	ROD, BRAKE	1					
9	90501–10245	SPRING, COMPRESSION	1					
10	90249–12008	PIN	1					
11	90179–06835	NUT	1					
12	91402–20012	PIN, COTTER	1					
13	92902–06600	WASHER, PLATE	1					
14	BBY–F7311–00	STAND, SIDE	1					
15	90109–08850	BOLT	1					
16	95302–08700	NUT, HEXAGON	1					
17	90506–23809	SPRING, TENSION	1					
18	BBY–F7411–00	FOOTREST 1	1					
19	95D32–08016	BOLT, FLANGE DEEP RECESS	4					
20	5LL–F7413–00	COVER, FOOTREST	2					
21	BBY–F7452–00–P0	BRACKET, FOOTREST 1	1					MBL2
22	BBY–F7431–00	FOOTREST, REAR 1	1					
23	5BU–F7433–00	COVER, REAR FOOTREST	1					
24	5BU–F7445–00	PLATE 1	1					
25	91702–06035	PIN, CLEVIS	1					
26	91402–20012	PIN, COTTER	1					
27	90480–01559	GROMMET	1					

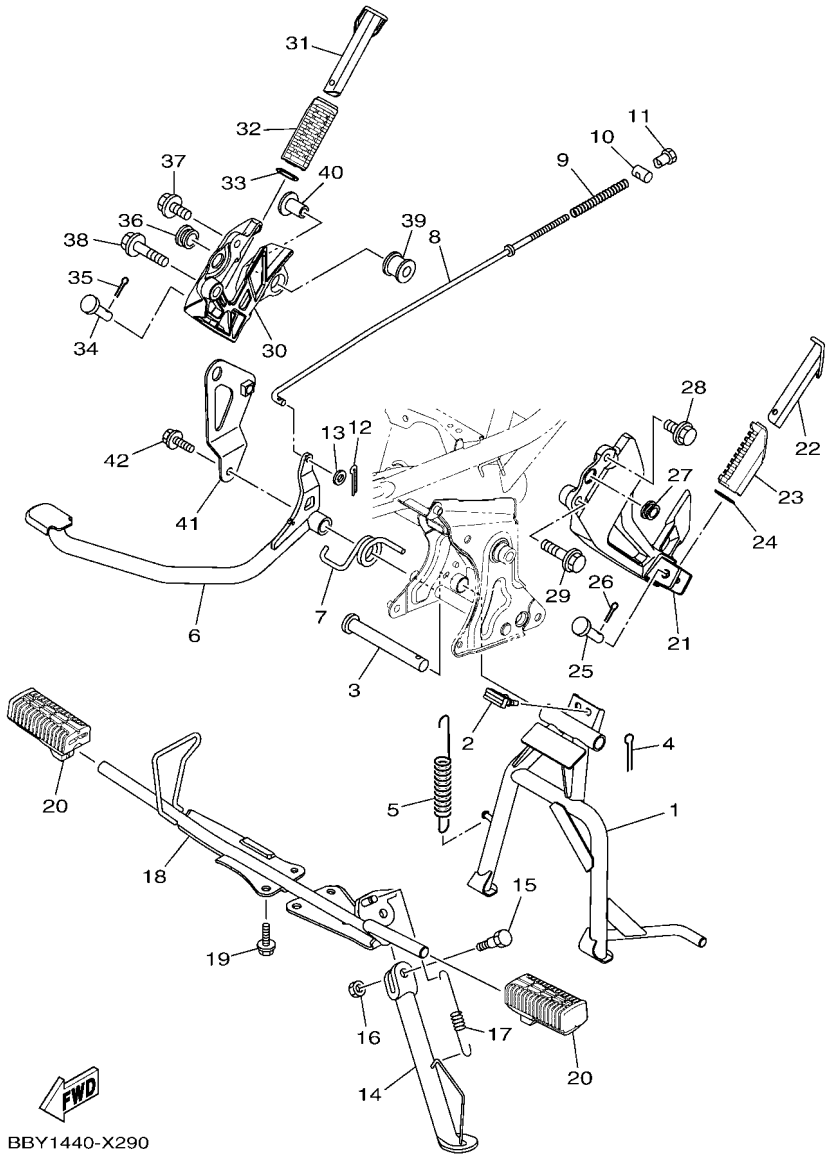

FIG. 29 STAND & FOOTREST

REF. NO.	PART NO.	DESCRIPTION	BBY1					REMARKS
28	95D37–08020	BOLT, FLANGE DEEP RECESS	1					
29	95D32–08035	BOLT, FLANGE DEEP RECESS	1					
30	BBY–F7462–00–P0	BRACKET, FOOTREST 2	1					MBL2
31	BBY–F7441–00	FOOTREST, REAR 2	1					
32	5BU–F7444–00	COVER, REAR FOOTREST	1					
33	5BU–F7445–00	PLATE 1	1					
34	91702–06035	PIN, CLEVIS	1					
35	91402–20012	PIN, COTTER	1					
36	90480–01559	GROMMET	1					
37	95D37–08020	BOLT, FLANGE DEEP RECESS	1					
38	95D32–08035	BOLT, FLANGE DEEP RECESS	1					
39	29B–E4747–00	DAMPER, MUFFLER	1					
40	90387–08812	COLLAR	1					
41	BBY–F194J–00	STAY, MUFFLER	1					
42	95D32–08016	BOLT, FLANGE DEEP RECESS	1					

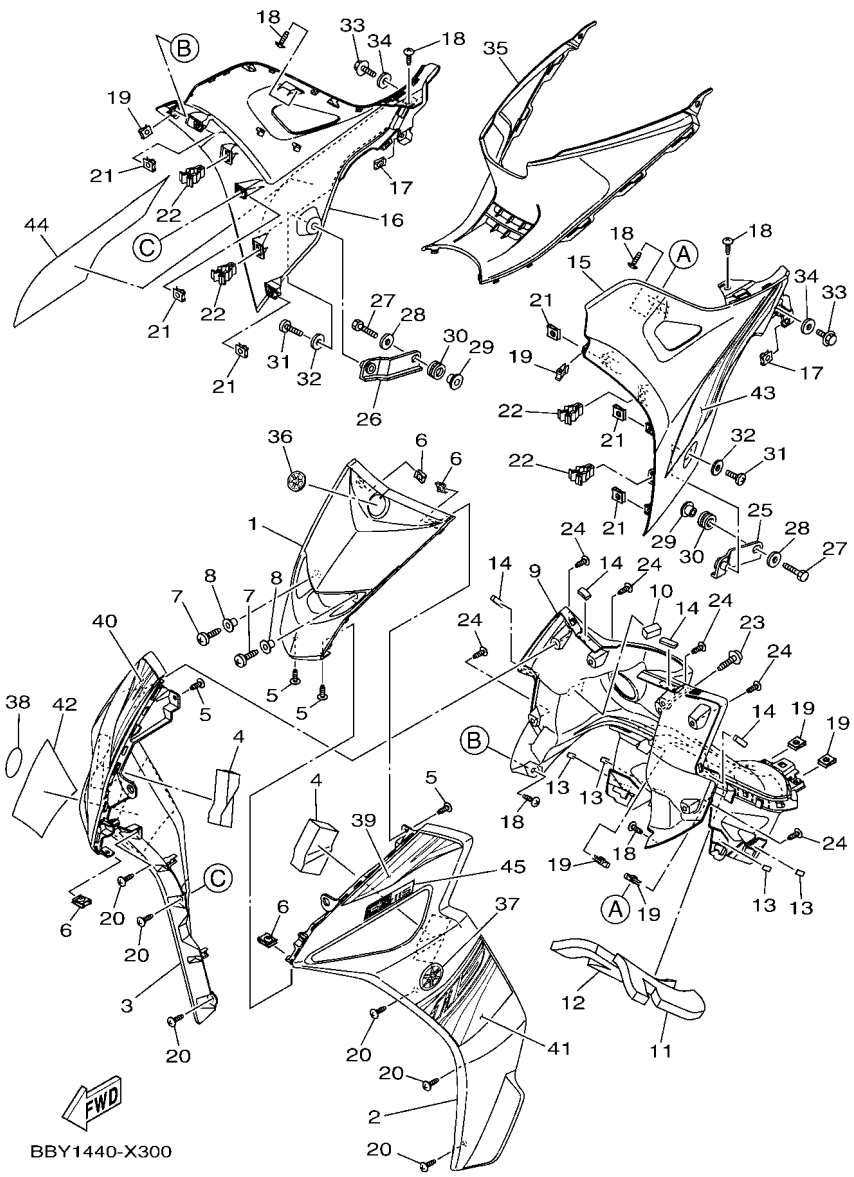

FIG. 30 LEG SHIELD

REF. NO.	PART NO.	DESCRIPTION	BBY1					REMARKS
1	BBY–F3391–00–P0	PANEL, FRONT	1					UR FOR RM7
	BBY–F3391–00–P1	PANEL, FRONT	1					UR FOR VPBC5
	BBY–F3391–00–P2	PANEL, FRONT	1					UR FOR CM6
2	BBY–F8351–00–P0	COWLING	1					SMX
3	BBY–F8377–00–P0	COWLING	1					SMX
4	90520–20834	DAMPER, PLATE	2					
5	97702–50016	SCREW,TAPPING	4					
6	90183–05807	NUT, SPRING	4					
7	98907–06020	SCREW, BIND	2					
8	90387–07789	COLLAR	2					
9	BBK–F8312–00	LEG SHIELD 2	1					
10	90520–15821	DAMPER, PLATE	1					
11	BBK–F836T–00	DAMPER, LOCATING 1	1					
12	BBK–F836U–00	DAMPER, LOCATING 2	1					
13	90520–02005	DAMPER, PLATE	4					
14	1FD–F8307–00	SEAL	4					
15	BBY–F836K–00–P0	PANEL, INNER 1	1					UR FOR RM7
	BBY–F836K–00–P1	PANEL, INNER 1	1					UR FOR VPBC5
	BBY–F836K–00–P2	PANEL, INNER 1	1					UR FOR CM6
16	BBY–F836L–00–P0	PANEL, INNER 2	1					UR FOR RM7
	BBY–F836L–00–P1	PANEL, INNER 2	1					UR FOR VPBC5
	BBY–F836L–00–P2	PANEL, INNER 2	1					UR FOR CM6
17	90183–05807	NUT, SPRING	2					
18	97702–50012	SCREW, TAPPING	6					
19	90183–05807	NUT, SPRING	6					
20	97702–50016	SCREW,TAPPING	6					
21	90183–05807	NUT, SPRING	6					

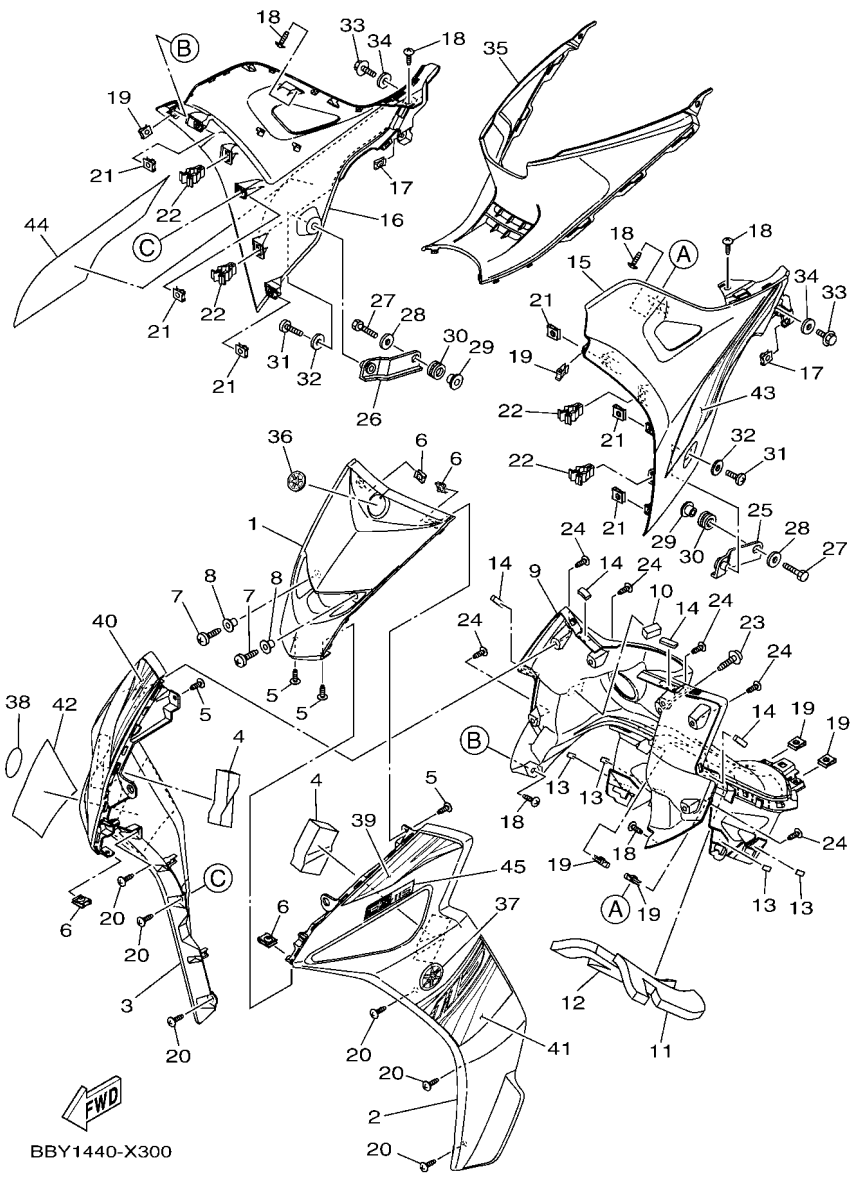

FIG. 30 LEG SHIELD

REF. NO.	PART NO.	DESCRIPTION	BBY1					REMARKS
22	90464–07018	CLAMP	4					
23	90159–06810	SCREW, WITH WASHER	1					
24	97702–50016	SCREW,TAPPING	6					
25	BBY–F8321–00	STAY 1	1					
26	BBY–F8322–00	STAY 2	1					
27	97002–06020	BOLT	2					
28	90201–06078	WASHER, PLATE	2					
29	90387–06237	COLLAR	2					
30	90480–13815	GROMMET	2					
31	98902–06012	SCREW, BIND	2					
32	90201–06078	WASHER, PLATE	2					
33	95D32–06012	BOLT, FLANGE DEEP RECESS	2					
34	90201–061A5	WASHER, PLATE	2					
35	BBK–F842N–00	COVER 2	1					
36	5VW–F313B–00	EMBLEM, 1	1					
37	1S8–F175C–00	TUNING FORK MARK	1					
38	1S8–F175C–00	TUNING FORK MARK	1					
39	BBY–F8391–00	GRAPHIC 1	1					UR FOR RM7
	BBY–F8391–10	GRAPHIC 1	1					UR FOR VPBC5
	BBY–F8391–20	GRAPHIC 1	1					UR FOR CM6
40	BBY–F8392–00	GRAPHIC 2	1					UR FOR RM7
	BBY–F8392–10	GRAPHIC 2	1					UR FOR VPBC5
	BBY–F8392–20	GRAPHIC 2	1					UR FOR CM6
41	BBY–F8393–00	GRAPHIC 3	1					UR FOR RM7
	BBY–F8393–10	GRAPHIC 3	1					UR FOR VPBC5
	BBY–F8393–20	GRAPHIC 3	1					UR FOR CM6
42	BBY–F8394–00	GRAPHIC 4	1					UR FOR RM7

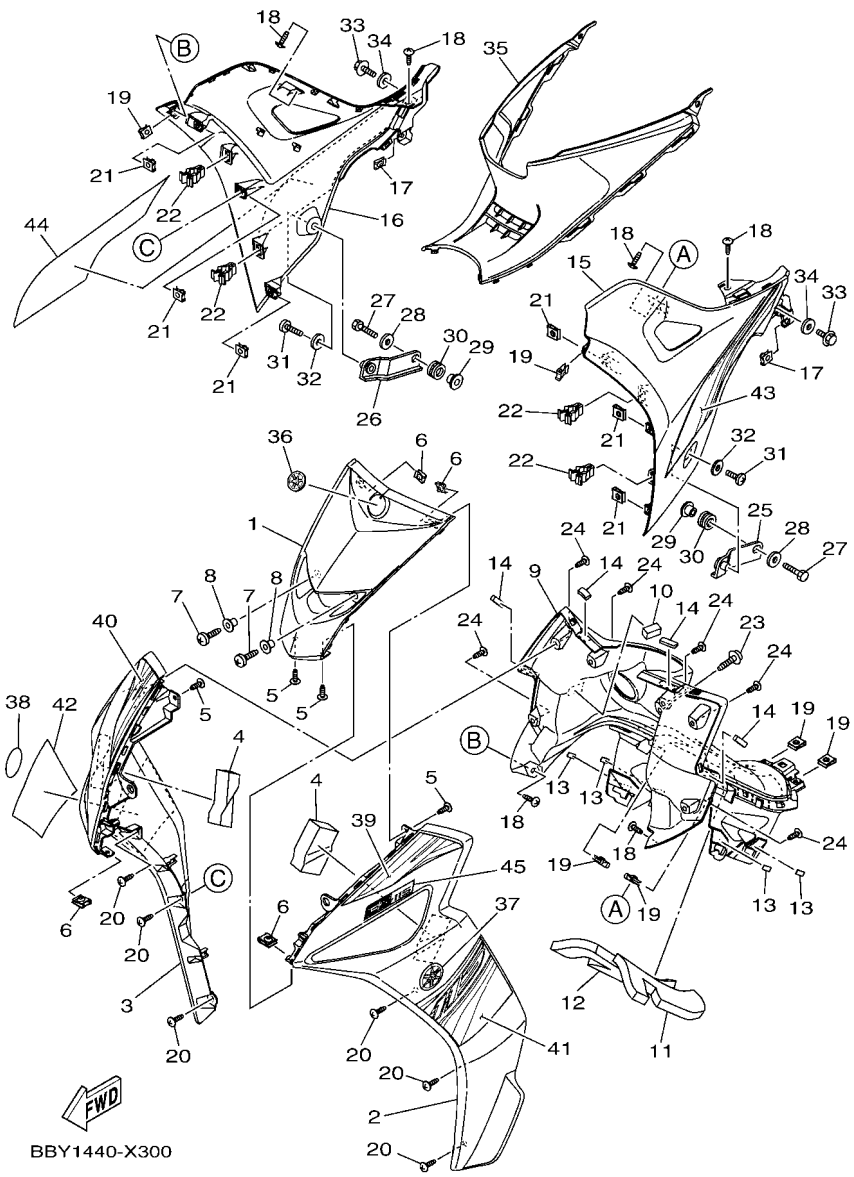

FIG. 30 LEG SHIELD

REF. NO.	PART NO.	DESCRIPTION	BBY1					REMARKS
42	BBY–F8394–10	GRAPHIC 4	1					UR FOR VPBC5
	BBY–F8394–20	GRAPHIC 4	1					UR FOR CM6
43	BBY–F8398–00	GRAPHIC 5	1					UR FOR RM7
	BBY–F8398–10	GRAPHIC 5	1					UR FOR VPBC5
	BBY–F8398–20	GRAPHIC 5	1					UR FOR CM6
44	BBY–F8399–00	GRAPHIC 6	1					UR FOR RM7
	BBY–F8399–10	GRAPHIC 6	1					UR FOR VPBC5
	BBY–F8399–20	GRAPHIC 6	1					UR FOR CM6
45	BBY–F8315–00	EMBLEM	1					UR FOR RM7
	BBY–F8315–10	EMBLEM	1					UR FOR VPBC5
	BBY–F8315–20	EMBLEM	1					UR FOR CM6

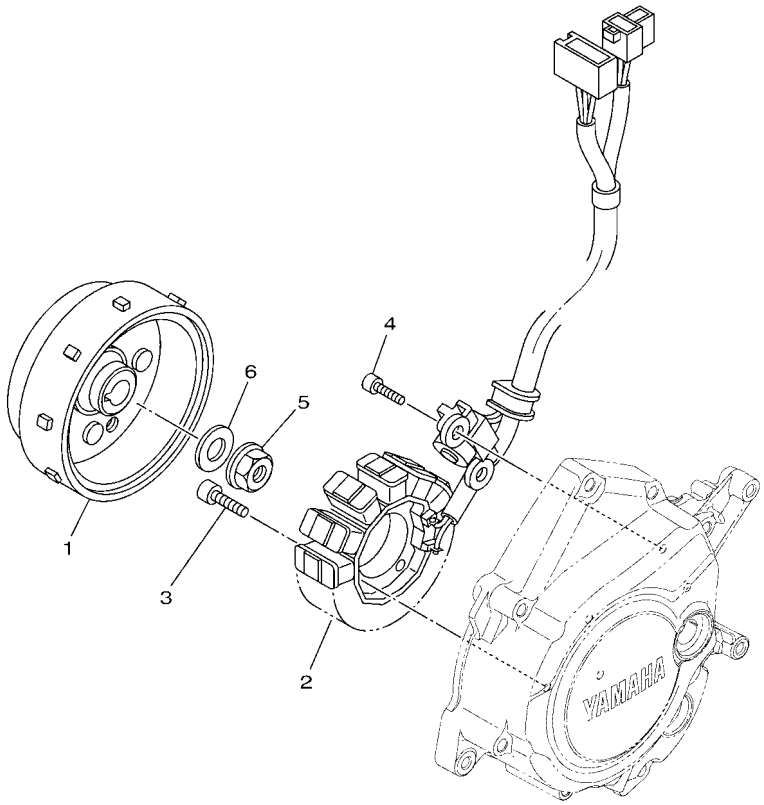

1FP1431-M340

FIG. 31 GENERATOR

REF. NO.	PART NO.	DESCRIPTION	BBY1					REMARKS
1	B6F–H1450–11	ROTOR ASSY	1					
2	B6F–H1410–01	STATOR ASSY	1					
3	91332–06025	BOLT	3					
4	91332–06016	BOLT	2					
5	95702–12500	NUT, FLANGE	1					
6	90201–122H1	WASHER, PLATE	1					

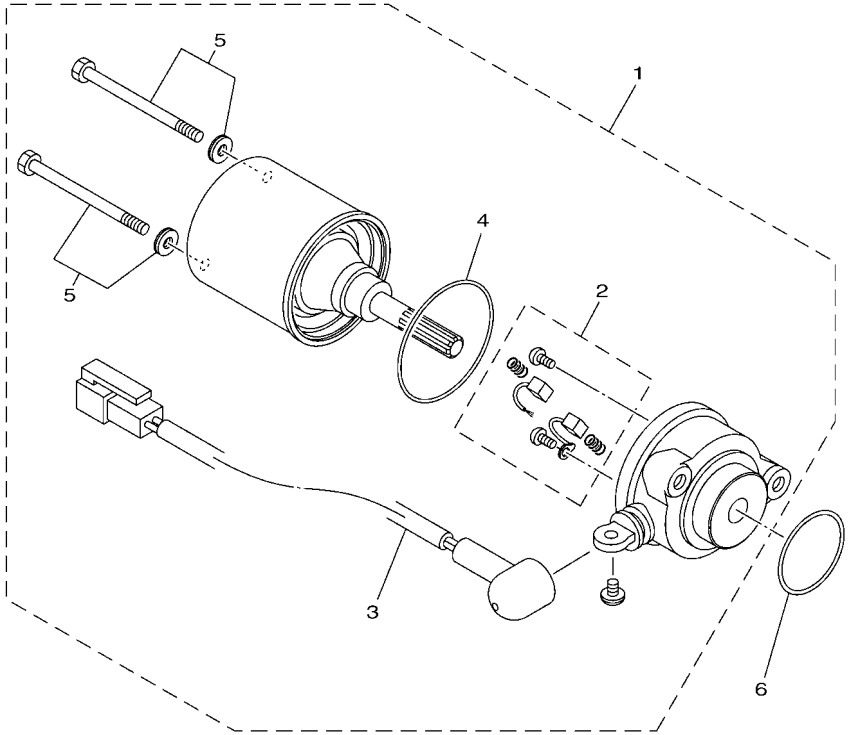

B7E1300-T320

FIG. 32 STARTING MOTOR

REF. NO.	PART NO.	DESCRIPTION	BBY1					REMARKS
1	B7E–H1800–00	STARTING MOTOR ASSY	1					
2	BE8–H1801–00	.BRUSH SET	1					
3	BL8–H183G–00	.CORD COMP.	1					
4	4S9–H1834–00	.RING	1					
5	1JD–H1828–00	.SCREW SET	2					
6	93210–29805	O-RING	1					UR
	93210–29803	O-RING	1					UR

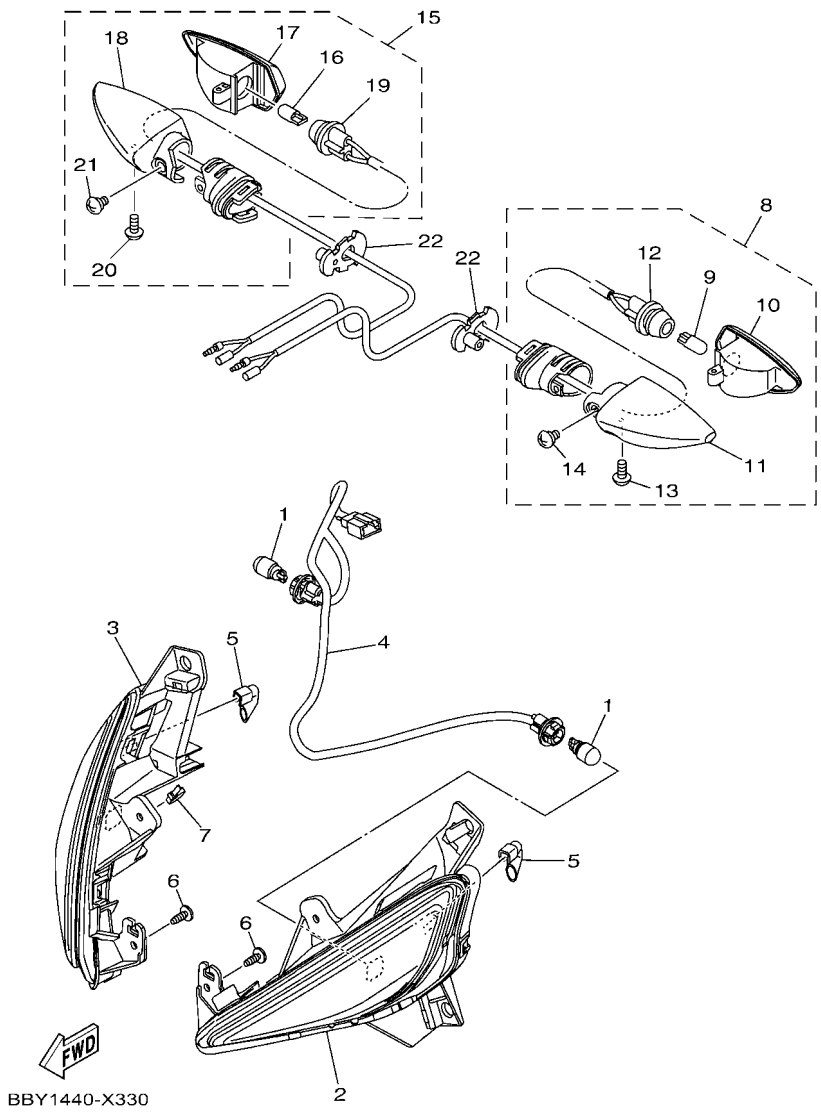

FIG. 33 FLASHER LIGHT

REF. NO.	PART NO.	DESCRIPTION	BBY1					REMARKS
1	2CB–H3311–00	BULB, FLASHER (12V-10W)	2					
2	BBK–H3310–00	FRONT FLASHER LIGHT ASSY 1	1					
3	BBK–H3320–00	FRONT FLASHER LIGHT ASSY 2	1					
4	BBK–H4140–00	SOCKET CORD ASSY	1					
5	2BM–H411V–00	CAP	2					
6	97702–50016	SCREW,TAPPING	2					
7	90464–36800	CLAMP	1					
8	2WB–H3330–00	REAR FLASHER LIGHT ASSY 1	1					
9	55D–H3311–00	.BULB, FLASHER (12V-10W)	1					
10	55D–H333A–00	.LENS COMP 1	1					
11	55D–H3323–00	.BODY	1					
12	2WB–H333E–00	.CORD ASSY	1					
13	55D–H3333–00	.SCREW, LENS FITTING	1					
14	55D–H3358–00	.SCREW, SPECIAL	1					
15	2WB–H3340–00	REAR FLASHER LIGHT ASSY 2	1					
16	55D–H3311–00	.BULB, FLASHER (12V-10W)	1					
17	55D–H334A–00	.LENS COMP 2	1					
18	55D–H332M–00	.BODY 2	1					
19	2WB–H334E–00	.CORD ASSY	1					
20	55D–H3333–00	.SCREW, LENS FITTING	1					
21	55D–H3358–00	.SCREW, SPECIAL	1					
22	1VP–H3318–00	STAY, FLASHER 1	2					

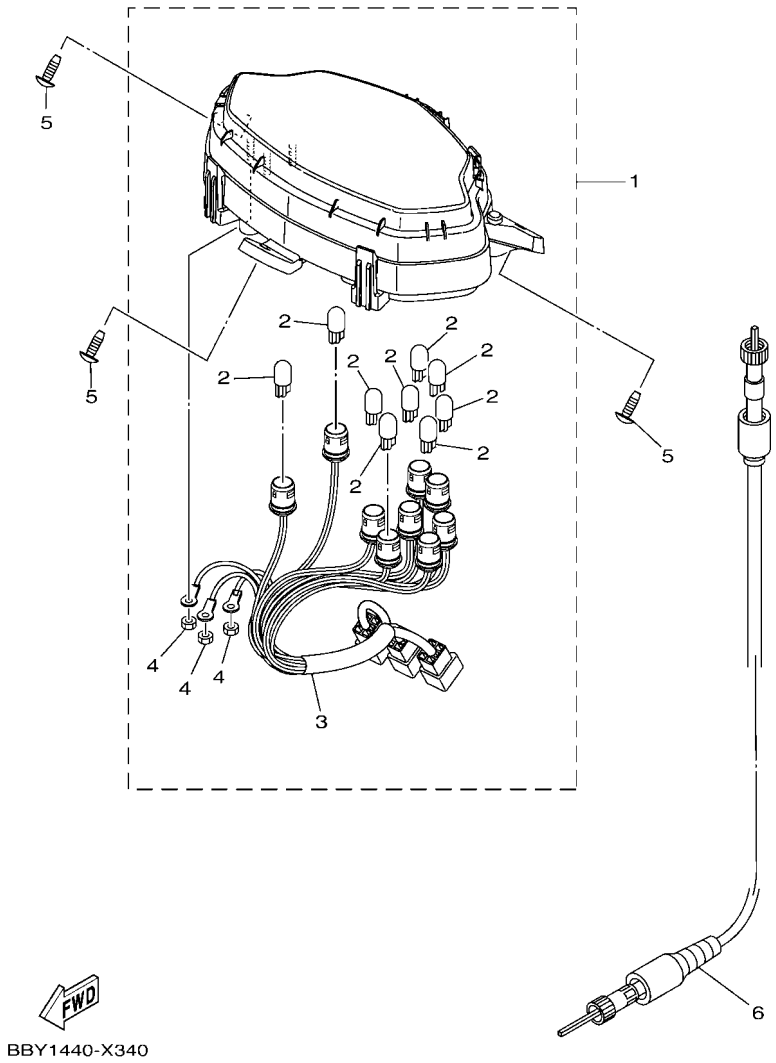

FIG. 34 METER

REF. NO.	PART NO.	DESCRIPTION	BBY1					REMARKS
1	BBY–H3510–00	SPEEDOMETER ASSY	1					
2	3GF–H3517–00	.BULB (12V-1.7W)	9					
3	BBY–H3509–00	.SOCKET CORD ASSY	1					
4	9530N–03600	.NUT	3					
5	97702–50016	SCREW,TAPPING	3					
6	BBK–H3550–00	SPEEDOMETER CABLE ASSY	1					

FIG. 35 HEADLIGHT

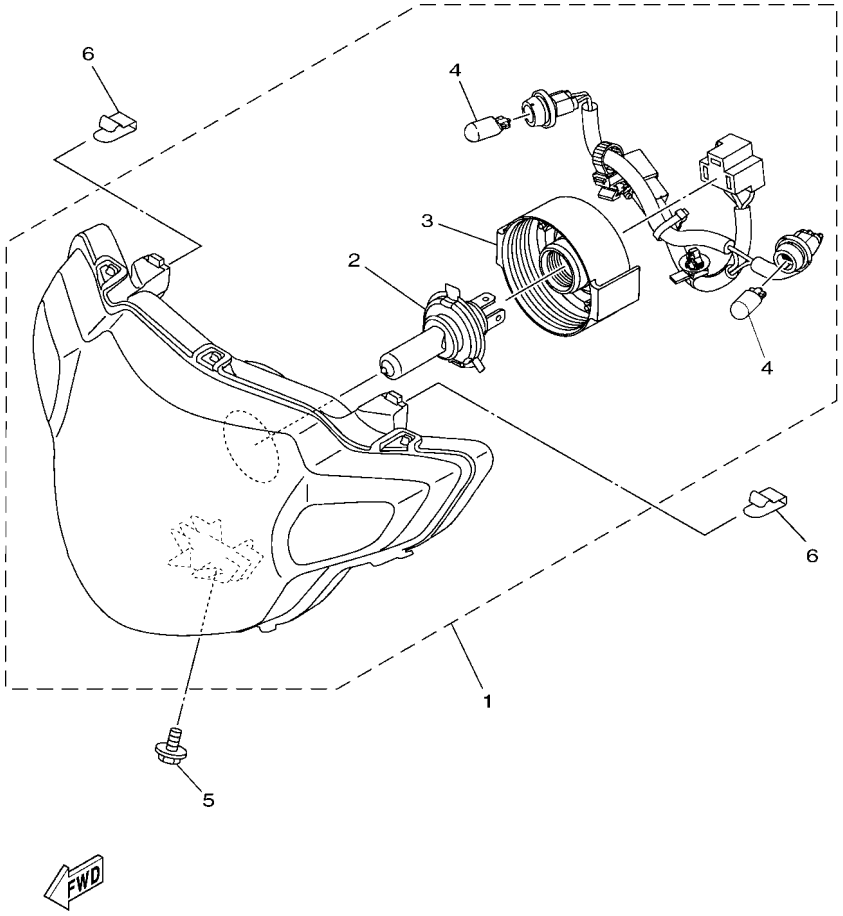

REF. NO.	PART NO.	DESCRIPTION	BBY1					REMARKS
1	BBK–H4310–00	HEADLIGHT UNIT ASSY	1					
2	2ND–H4314–00	.BULB, HEADLIGHT (12V-35/35W)	1					
3	15C–H4397–00	.COVER, SOCKET	1					
4	31B–H5353–00	.BULB (12V-5W)	2					
5	95D02–06010	BOLT, FLANGE DEEP RECESS	1					
6	3S4–H4374–00	CLIP	2					

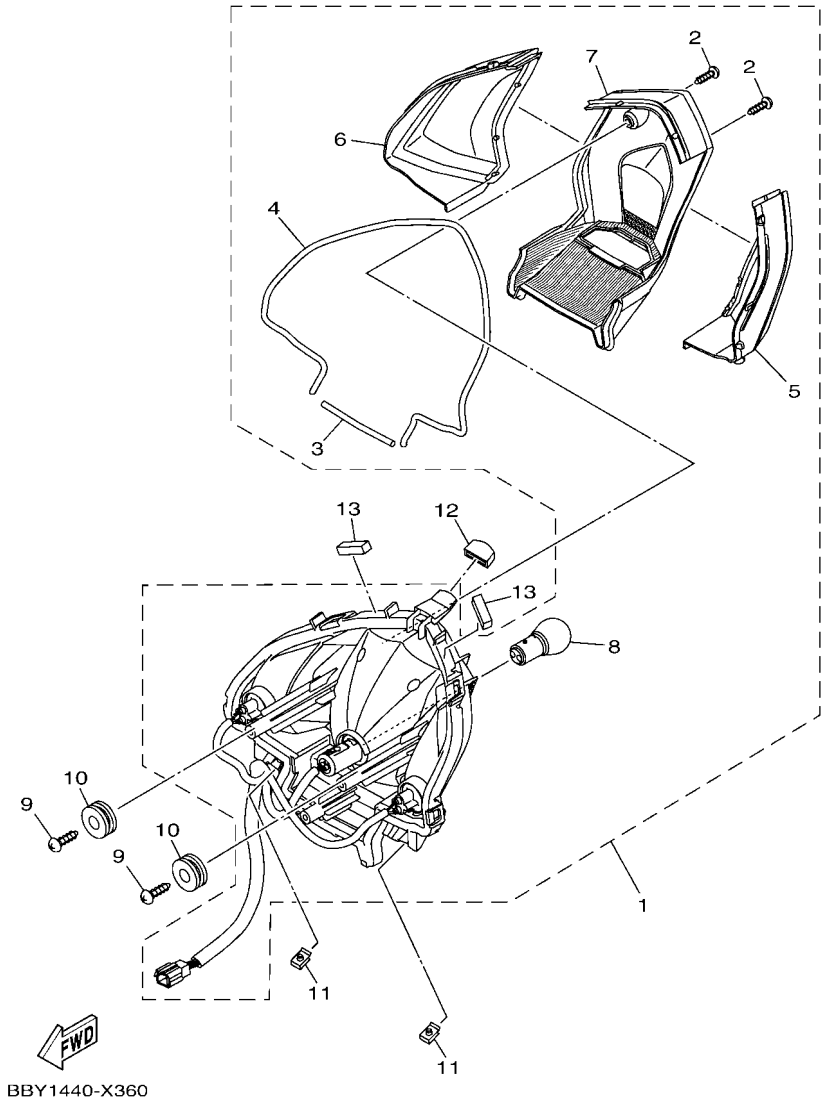

FIG. 36 TAILLIGHT

REF. NO.	PART NO.	DESCRIPTION	BBY1					REMARKS
1	BBY–H4710–00	TAILLIGHT UNIT ASSY	1					
2	97702–40620	.SCREW, TAPPING	2					
3	BBK–H4712–00	.GASKET, TAILLIGHT	1					
4	BBK–H4723–00	.GASKET, TAIL LENS	1					
5	BCA–H3332–00	.LENS, FLASHER	1					
6	BCA–H3342–00	.LENS, FLASHER 2	1					
7	BBY–H4709–00	.TAIL LIGHT SUB-ASSY	1					
8	4AC–H4714–00	.BULB (12V-21/5W)	1					
9	97702–50012	SCREW, TAPPING	2					
10	90480–16004	GROMMET	2					
11	90183–05014	NUT, SPRING	2					
12	BBY–H4759–00	GROMMET	1					
13	90520–08803	DAMPER, PLATE	2					

FIG. 37 SWITCH & LEVER FOR DISK BRAKE

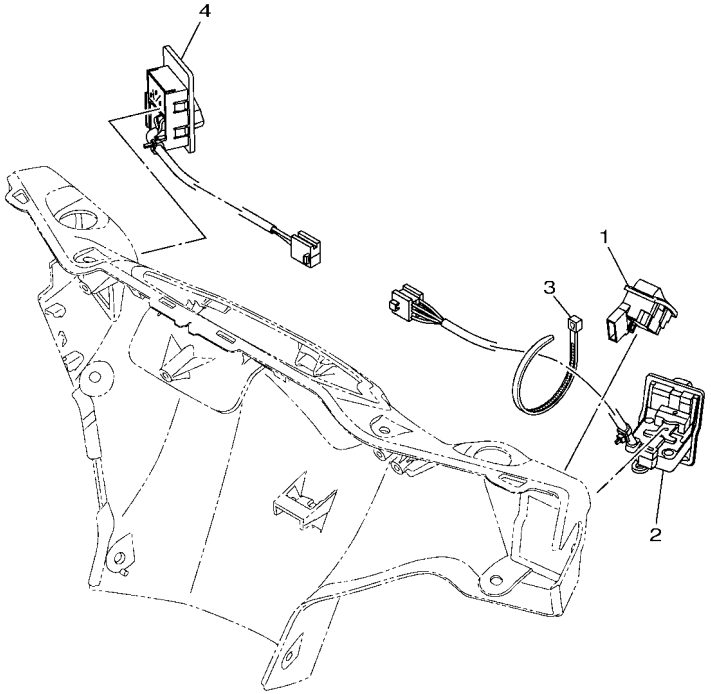

BBY1440-X370

REF. NO.	PART NO.	DESCRIPTION	BBY1					REMARKS
1	B8A–H276A–00	DIMMER SWITCH COMP.	1					
2	BBK–H3975–00	SWITCH, HANDLE 2	1					
3	90464–36800	CLAMP	1					
4	BCA–H3976–00	SWITCH, HANDLE 1	1					

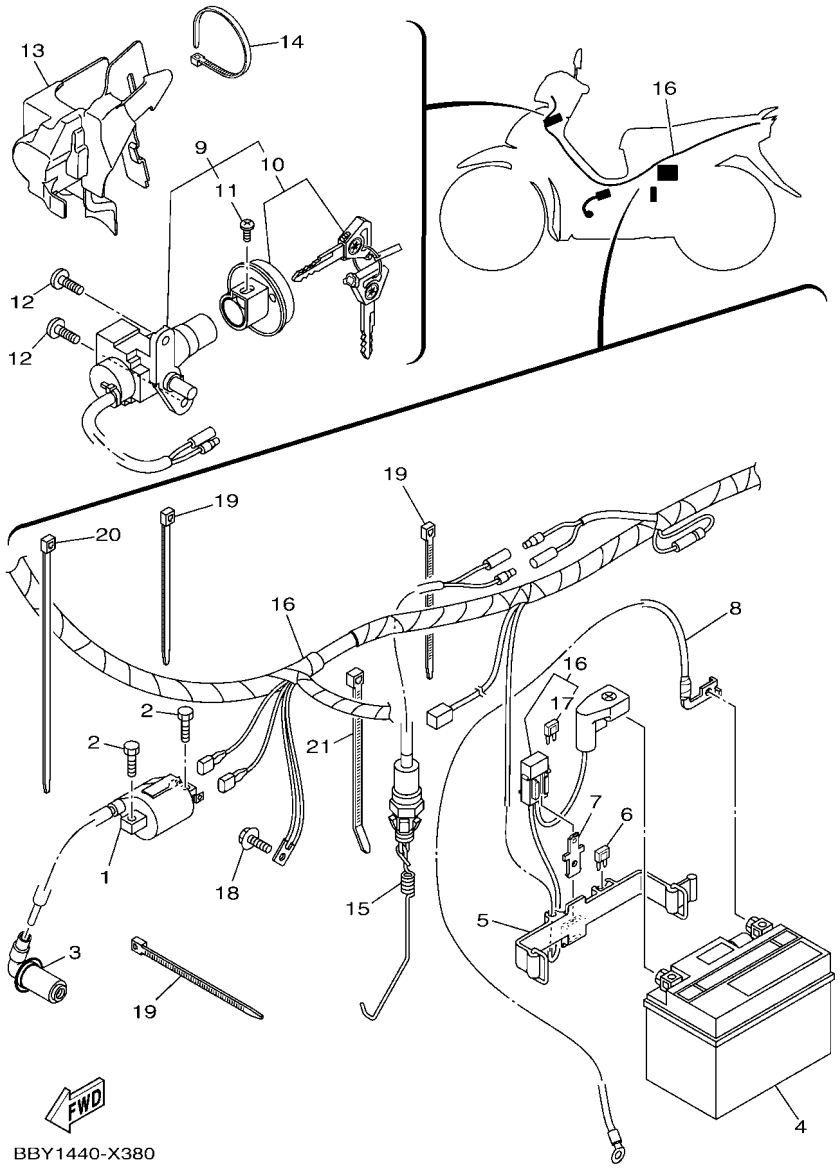

FIG. 38 ELECTRICAL 1

REF. NO.	PART NO.	DESCRIPTION	BBY1					REMARKS
1	1FC–H2310–10	IGNITION COIL ASSY	1					
2	95E32–06016	BOLT, FLANGE DEEP RECESS	2					
3	2PH–H2370–10	PLUG CAP ASSY	1					
4	2CB–H2100–01	BATTERY ASSY (YUASA YTZ4V)	1					
5	BBK–H2131–00	BAND, BATTERY	1					
6	B63–H2151–10	FUSE (15A)	1					
7	BBK–H2171–00	STAY, FUSE BOX	1					
8	BBY–H2116–00	WIRE, MINUS LEAD	1					
9	BBY–H252E–00	MAIN SWITCH COMP.	1					
10	1FC–WH250–10	.SHUTTER & BLANK KEY	1					
11	97602–05310	.SCREW, PAN HEAD WITH WASHER	1					
12	90111–06162	BOLT, HEXAGON SOCKET BUTTON	2					
13	BBK–F3472–00	PROTECTOR	1					
14	90464–36800	CLAMP	1					
15	1FC–H2530–01	STOP SWITCH ASSY	1					
16	BBY–H2590–00	WIRE HARNESS ASSY	1					
17	BBY–H2151–00	.FUSE (15A)	1					
18	95E32–06014	BOLT, FLANGE DEEP RECESS	1					
19	90464–36800	CLAMP	3					
20	90464–70800	CLAMP	1					
21	90464–50804	CLAMP	1					

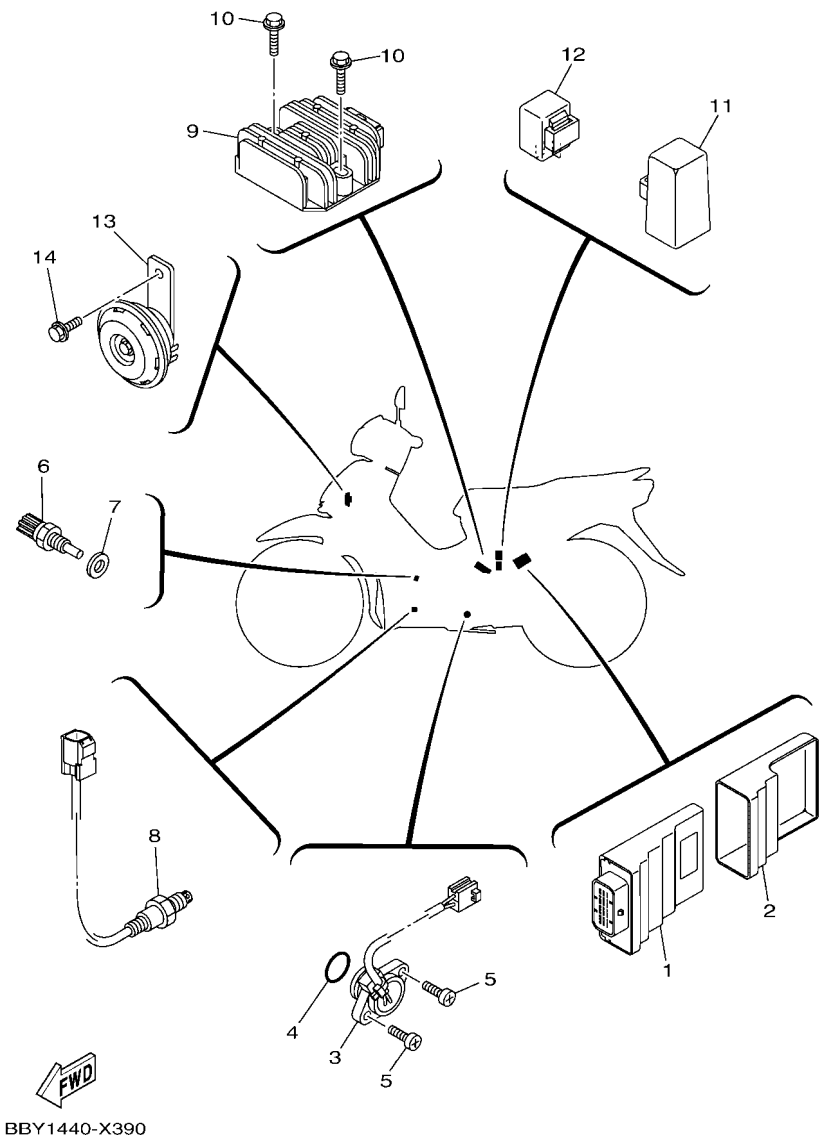

FIG. 39 ELECTRICAL 2

REF. NO.	PART NO.	DESCRIPTION	BBY1					REMARKS
1	BBY–H591A–00	ENGINE CONTROL UNIT ASSY	1					
2	B6F–H5546–00	BAND	1					
3	16S–H2540–00	NEUTRAL SWITCH ASSY	1					
4	93210–21802	O-RING	1					
5	98502–05016	SCREW,PAN HEAD	2					
6	52B–H3591–00	THERMO UNIT	1					
7	90430–10806	GASKET	1					
8	2BM–H592A–20	SENSOR, OXYGEN	1					
9	2BL–H1960–10	RECTIFIER & REGULATOR ASSY	1					
10	95E32–06025	BOLT, FLANGE DEEP RECESS	2					
11	5TN–H1940–01	STARTER RELAY ASSY	1					
12	16S–H3350–01	FLASHER RELAY ASSY	1					
13	BBY–H3371–00	HORN	1					
14	95D02–06010	BOLT, FLANGE DEEP RECESS	1					

PART NO.	REF. NO.
22W–24181–00	7 – 4
3RW–25889–00	28 – 10
36Y–2589H–00	28 – 9
BBY–E1111–00	1 – 1
1DB–E111F–00	4 – 5
1DR–E1133–10	1 – 2
1FP–E1166–11	8 – 3
1FC–E1173–00	1 – 9
54P–E1181–00	1 – 13
BBY–E1191–00	1 – 7
1YC–E1193–00	1 – 10
1FP–E1310–00	1 – 16
BBY–E1351–00	1 – 17
1DY–E1603–10	2 – 10
1PB–E1631–00	2 – 7
54S–E1633–00	2 – 8
1FC–E1651–00	2 – 4
1DY–E1681–00	2 – 2
2PH–E2111–00	3 – 1
B7E–E2113–00	3 – 4
B63–E2117–01	3 – 6
5TL–E2118–00	3 – 5
54S–E2119–00	3 – 3
B8B–E2121–00	3 – 2
55P–E2126–00	3 – 7
1FP–E2146–01	3 – 12
2BL–E2151–00	3 – 8
33S–E2159–01	3 – 10
BBY–E2170–00	4 – 1
44S–E2176–00	4 – 7
2ND–E2210–20	4 – 11
2VP–E2213–00	4 – 13
5MX–E2222–00	4 – 12
1DR–E2228–00	4 – 15
1FC–E2231–00	4 – 9
BBY–E2241–00	4 – 10
5P0–E2662–00	3 – 11
16S–E3300–10	5 – 1
31D–E3324–00	5 – 7
4LS–E3411–00	5 – 5
38B–E3440–01	5 – 6
BBY–E3447–00	5 – 8
54P–E3575–00	6 – 13
B7E–E3585–00	6 – 1
B7E–E3750–03	6 – 4
B7E–E3761–00	6 – 7
B7E–E3770–00	6 – 6
1DY–E3907–30	22 – 7

PART NO.	REF. NO.
2SU–E3938–00	6 – 10
BBK–E3971–00	22 – 11
1PB–E3993–01	22 – 17
1ST–E4137–00	6 – 11
2SU–E4147–00	6 – 8
B7E–E41A1–00	6 – 9
1FC–E4411–10	6 – 14
1FC–E4412–00	6 – 16
1FC–E4426–00	6 – 25
5HU–E443E–01	6 – 21
16S–E443G–00	6 – 23
1FC–E4450–00	6 – 15
1FC–E4452–00	6 – 19
1FC–E4453–10	6 – 17
1FC–E4462–00	6 – 18
10C–E4613–00	7 – 10
BBY–E4711–00	7 – 1
B7E–E4718–01	7 – 2
29B–E4747–00	29 – 39
1FP–E5113–00	9 – 9
1FP–E5150–31	8 – 1
16S–E5155–00	8 – 5
16S–E5362–10	9 – 19
4YS–E5371–00	8 – 2
16S–E5377–01	9 – 12
BBY–E5411–00	9 – 1
1FC–E5418–00	9 – 10
BBY–E5421–00	9 – 13
BBY–E5451–00	9 – 2
BBY–E5461–00	9 – 14
5TN–E5512–00	11 – 1
1FP–E5524–00	11 – 3
B7E–E5580–00	11 – 6
1FC–E5620–01	10 – 11
1FC–E5641–00	10 – 2
1FC–E5643–00	10 – 10
1P6–E5644–00	10 – 5
1FC–E5645–00	10 – 8
1FC–E5661–00	10 – 1
1FC–E5664–00	10 – 9
1FC–E5665–00	10 – 7
1FC–E5671–00	10 – 4
1FC–E5673–00	10 – 3
1FP–E6116–00	12 – 1
1FP–E6135–00	12 – 23
1FP–E6150–10	12 – 13
1FP–E6320–10	12 – 17
1FP–E6321–10	12 – 16

PART NO.	REF. NO.
1FP–E6324–00	12 – 15
1FP–E6333–10	12 – 20
5HV–E6346–00	15 – 9
1FP–E6351–10	12 – 19
16S–E6356–00	12 – 26
1FC–E6357–00	12 – 25
1FP–E6371–10	12 – 14
1FP–E6383–10	12 – 18
5LM–E6512–00	12 – 6
5D9–E6586–00	12 – 7
1FP–E6611–22	12 – 2
1FP–E6620–10	12 – 3
1FP–E6626–10	12 – 4
1FP–E6628–00	12 – 22
1FP–E6777–10	12 – 21
1FC–E7121–00	13 – 6
1FC–E7121–10	13 – 6
1FC–E7131–00	13 – 2
1FC–E7141–00	13 – 3
1FC–E7211–10	13 – 18
1FC–E7231–00	13 – 17
1FC–E7241–00	13 – 16
1FC–E7402–10	13 – 13
1FC–E7411–10	13 – 1
1S8–E7456–00	13 – 28
1FP–E7471–00	13 – 11
1FP–E8101–00	15 – 1
BBY–E8110–00	15 – 23
5H3–E8113–00	15 – 24
1FP–E8120–00	14 – 7
1FP–E8140–00	15 – 7
1FP–E8172–01	15 – 3
1S8–E8173–00	15 – 15
1FP–E8179–01	15 – 2
1VP–E817A–00	15 – 16
1FP–E8181–00	15 – 4
2SU–E8185–00	14 – 2
5D9–E8186–00	15 – 17
1FC–E8186–10	15 – 17
1FP–E8337–10	15 – 8
1JD–E8511–00	14 – 11
1JD–E8512–00	14 – 12
1S8–E8531–00	14 – 9
2VP–E8540–00	14 – 1
1FC–E8542–00	14 – 5
1DY–E8545–00	13 – 21
1FC–E8561–00	13 – 22
1FP–E8563–00	13 – 30

PART NO.	REF. NO.
1FP–E8699–00	15 – 22
BBY–F1110–00	16 – 1
1FC–F117G–00	16 – 8
BBY–F1511–00–P0	17 – 1
BBY–F1511–00–P1	17 – 1
BBY–F1511–00–P3	17 – 1
BBK–F1556–00	17 – 2
31D–F1568–30	27 – 22
BBY–F1611–00	17 – 7
2WB–F1668–00	19 – 12
BBK–F1711–00	18 – 1
BBK–F1721–00	18 – 3
BBY–F172X–00–P0	18 – 15
BBY–F1731–00–P0	18 – 5
BBY–F173E–00	18 – 18
BBY–F173E–10	18 – 18
BBY–F173E–20	18 – 18
BBY–F173F–00	18 – 19
BBY–F173F–10	18 – 19
BBY–F173F–20	18 – 19
BBY–F1741–00–P0	18 – 8
1S8–F1746–00	22 – 3
BBY–F174G–00	18 – 20
BBY–F174G–10	18 – 20
BBY–F174G–20	18 – 20
BBY–F174H–00	18 – 21
BBY–F174H–10	18 – 21
BBY–F174H–20	18 – 21
1S8–F175C–00	30 – 37
	30 – 38
BBY–F194J–00	29 – 41
BBY–F2100–00–WN	19 – 1
5B9–F2123–00	19 – 2
1FC–F2141–00	19 – 4
BBY–F2151–00	19 – 3
BBY–F2210–00	19 – 9
1FD–F2311–00	19 – 7
BBY–F3102–00	21 – 1
BBY–F3103–00	21 – 16
1FC–F3110–10	21 – 5
	21 – 20
1FC–F3111–10	21 – 13
	21 – 28
BBY–F3126–00	21 – 2
BBY–F3136–00	21 – 17
5VW–F313B–00	30 – 36
1FC–F3141–10	21 – 12
	21 – 27

PART NO.	REF. NO.
5LL–F3144–00	21 – 11
	21 – 26
4UV–F3145–00	21 – 3
	21 – 18
2JG–F3147–00	21 – 14
	21 – 29
31D–F3152–00	21 – 8
	21 – 23
31D–F3153–00	21 – 15
	21 – 30
5P0–F3156–00	21 – 4
	21 – 19
2JG–F3157–00	21 – 7
	21 – 22
509–F3158–L0	21 – 9
	21 – 24
31D–F3170–00	21 – 6
	21 – 21
31D–F3181–50	21 – 10
	21 – 25
BBY–F3317–00	20 – 9
BBY–F331A–00	20 – 17
BBY–F331E–00	20 – 15
BBK–F3340–00	21 – 31
31D–F3346–00	21 – 33
BBY–F3391–00–P0	30 – 1
BBY–F3391–00–P1	30 – 1
BBY–F3391–00–P2	30 – 1
4FP–F3411–10	21 – 32
4RT–F3411–10	20 – 4
1KL–F3412–10	20 – 1
4RT–F3412–10	20 – 3
4UV–F3415–00	20 – 7
2WB–F3416–00	20 – 6
1P6–F341E–10	20 – 5
5VL–F341E–10	20 – 2
BBK–F3472–00	38 – 13
BBY–F3874–00	20 – 18
BBY–F4110–00	22 – 1
1FC–F412G–00	23 – 10
B4U–F414G–00	22 – 2
1DB–F414G–01	22 – 8
BBY–F417E–00	22 – 19
1FC–F4186–00	22 – 15
1FC–F4187–00	22 – 16
BBY–F4217–00	22 – 18
BBY–F4327–00	22 – 20
1VP–F4491–00	22 – 9

PART NO.	REF. NO.
4YY–F4610–00	22 – 13
4YY–F4612–00	22 – 14
BBK–F470F–00	23 – 2
BBY–F4726–00	23 – 4
2WB–F4727–00	23 – 6
BBK–F4730–00	23 – 1
BBK–F473R–00	23 – 7
BJ7–F4741–00	23 – 3
BBY–F4773–00–P0	23 – 17
1FC–F4780–00	23 – 12
BBK–F478E–00	23 – 14
1S8–F5168–00–33	24 – 1
3AY–F5181–01	24 – 8
5TP–F5190–01	24 – 10
31D–F530K–00	26 – 9
31D–F5321–00–33	26 – 7
1S8–F5338–00–33	26 – 1
31D–F533A–00	26 – 13
31D–F5351–00	26 – 15
31D–F5355–00	26 – 12
1VP–F5364–00	26 – 6
1VP–F5366–00	26 – 18
31D–F5371–00	26 – 39
31D–F5373–00	26 – 45
1FC–F5381–10	26 – 29
16S–F5383–00	26 – 32
BDK–F5388–00	26 – 34
BBY–F5412–00	26 – 23
BBY–F5414–00	26 – 26
31D–F5440–01	26 – 22
5P0–F5802–00	25 – 4
5YP–F5803–50	25 – 5
5D9–F5805–01	25 – 9
5P0–F580A–00	28 – 6
31B–F580U–03	25 – 3
5P0–F5827–00	25 – 14
31D–F582U–00	25 – 1
2ND–F583T–03	28 – 4
2ND–F5852–00	28 – 8
2ND–F5854–00	28 – 7
2ND–F5855–00	28 – 11
5TL–F5867–11	28 – 12
2ND–F5870–00	28 – 5
1FC–F5872–30	28 – 1
1FD–F5875–00	20 – 10
1FD–F5886–00	20 – 13
5YP–F5917–00	25 – 6
5P0–F5919–01	25 – 11

PART NO.	REF. NO.
5YP–F5924–00	25 – 12
5YP–F5925–01	25 – 10
5YP–F5937–00	25 – 7
5YP–F5939–00	25 – 13
BBY–F6110–00	27 – 1
BBY–F6143–00–P0	27 – 5
BBY–F6143–00–P1	27 – 5
BBY–F6143–00–P3	27 – 5
BBK–F6145–00	27 – 7
B17–F6240–02	27 – 11
1VP–F6241–00	27 – 12
1VB–F6246–00	27 – 20
2CB–F6280–20	27 – 13
1FC–F6281–10	27 – 17
1FC–F6282–10	27 – 18
2CB–F6290–20	27 – 14
BBY–F6301–00	27 – 15
BBY–F7111–00	29 – 1
31D–F7112–00	29 – 3
1FC–F7114–11	29 – 2
BBY–F7211–00	29 – 6
5D9–F7231–00	29 – 8
BBY–F7311–00	29 – 14
BBY–F7411–00	29 – 18
5LL–F7413–00	29 – 20
1FC–F7426–00	29 – 7
BBY–F7431–00	29 – 22
5BU–F7433–00	29 – 23
BBY–F7441–00	29 – 31
5BU–F7444–00	29 – 32
5BU–F7445–00	29 – 24
	29 – 33
BBY–F7452–00–P0	29 – 21
BBY–F7462–00–P0	29 – 30
B17–F814F–00	23 – 20
5HU–F8152–00	23 – 19
1VP–F815P–00	27 – 23
1FD–F8307–00	30 – 14
BBK–F8312–00	30 – 9
BBY–F8315–00	30 – 45
BBY–F8315–10	30 – 45
BBY–F8315–20	30 – 45
BBY–F8321–00	30 – 25
BBY–F8322–00	30 – 26
BBY–F8351–00–P0	30 – 2
5PV–F836D–00	18 – 17
BBY–F836K–00–P0	30 – 15
BBY–F836K–00–P1	30 – 15

PART NO.	REF. NO.
BBY–F836K–00–P2	30 – 15
BBY–F836L–00–P0	30 – 16
BBY–F836L–00–P1	30 – 16
BBY–F836L–00–P2	30 – 16
BBK–F836T–00	30 – 11
BBK–F836U–00	30 – 12
BBY–F8377–00–P0	30 – 3
BBY–F8391–00	30 – 39
BBY–F8391–10	30 – 39
BBY–F8391–20	30 – 39
BBY–F8392–00	30 – 40
BBY–F8392–10	30 – 40
BBY–F8392–20	30 – 40
BBY–F8393–00	30 – 41
BBY–F8393–10	30 – 41
BBY–F8393–20	30 – 41
BBY–F8394–00	30 – 42
BBY–F8394–10	30 – 42
BBY–F8394–20	30 – 42
BBY–F8398–00	30 – 43
BBY–F8398–10	30 – 43
BBY–F8398–20	30 – 43
BBY–F8399–00	30 – 44
BBY–F8399–10	30 – 44
BBY–F8399–20	30 – 44
BBK–F842N–00	30 – 35
B6F–H1410–01	31 – 2
B6F–H1450–11	31 – 1
B7E–H1800–00	32 – 1
BE8–H1801–00	32 – 2
1JD–H1828–00	32 – 5
4S9–H1834–00	32 – 4
BL8–H183G–00	32 – 3
5TN–H1940–01	39 – 11
2BL–H1960–10	39 – 9
2CB–H2100–01	38 – 4
BBY–H2116–00	38 – 8
16S–H2126–00	22 – 5
BBK–H2131–00	38 – 5
BBY–H2151–00	38 – 17
B63–H2151–10	38 – 6
BBK–H2171–00	38 – 7
1FC–H2310–10	38 – 1
2PH–H2370–10	38 – 3
BBY–H252E–00	38 – 9
1FC–H2530–01	38 – 15
16S–H2540–00	39 – 3
BBY–H2590–00	38 – 16

PART NO.	REF. NO.
B8A–H276A–00	37 – 1
BBK–H3310–00	33 – 2
2CB–H3311–00	33 – 1
55D–H3311–00	33 – 9
	33 – 16
1VP–H3318–00	33 – 22
BBK–H3320–00	33 – 3
55D–H3323–00	33 – 11
55D–H332M–00	33 – 18
2WB–H3330–00	33 – 8
BCA–H3332–00	36 – 5
55D–H3333–00	33 – 13
	33 – 20
55D–H333A–00	33 – 10
2WB–H333E–00	33 – 12
2WB–H3340–00	33 – 15
BCA–H3342–00	36 – 6
55D–H334A–00	33 – 17
2WB–H334E–00	33 – 19
16S–H3350–01	39 – 12
55D–H3358–00	33 – 14
	33 – 21
BBY–H3371–00	39 – 13
BBY–H3509–00	34 – 3
BBY–H3510–00	34 – 1
3GF–H3517–00	34 – 2
BBK–H3550–00	34 – 6
52B–H3591–00	39 – 6
2ND–H3922–00	28 – 13
BBK–H3975–00	37 – 2
BCA–H3976–00	37 – 4
2DP–H3980–01	28 – 16
2BM–H411V–00	33 – 5
BBK–H4140–00	33 – 4
BBK–H4310–00	35 – 1
2ND–H4314–00	35 – 2
3S4–H4374–00	35 – 6
15C–H4397–00	35 – 3
BBY–H4709–00	36 – 7
BBY–H4710–00	36 – 1
BBK–H4712–00	36 – 3
4AC–H4714–00	36 – 8
BBK–H4723–00	36 – 4
BBY–H4759–00	36 – 12
2FC–H5111–00	17 – 14
55D–H5130–00	17 – 13
BE1–H5130–00	17 – 13
31B–H5353–00	35 – 4

PART NO.	REF. NO.
B6F–H5546–00	39 – 2
1FC–H5752–10	22 – 21
5BU–H5753–01	22 – 23
5BU–H5757–00	22 – 22
BBY–H591A–00	39 – 1
2BM–H592A–20	39 – 8
4C9–W0048–00	25 – 8
BBY–WE140–00	2 – 1
1FC–WH250–10	38 – 10
90101–08847	26 – 24
90105–06893	9 – 4
90105–088D9	16 – 4
90105–088E0	16 – 2
90105–088E1	4 – 6
90105–10295	27 – 3
90105–10831	25 – 15
90105–10879	19 – 10
90105–10882	19 – 11
90109–06577	28 – 14
90109–068B4	17 – 8
90109–08828	26 – 40
90109–08850	29 – 15
90110–05801	5 – 2
90110–06868	1 – 15
90111–06162	38 – 12
90111–06807	7 – 3
90111–08853	25 – 2
90116–08850	8 – 10
90119–05071	22 – 24
90119–06117	19 – 8
90119–06810	6 – 27
90119–068A2	22 – 6
90149–06159	14 – 3
90154–05006	18 – 13
90159–06810	30 – 23
90170–05803	3 – 9
90170–06809	26 – 35
90179–06835	29 – 11
90179–08518	1 – 11
90179–08639	26 – 25
90179–08818	16 – 5
90179–10803	10 – 12
90179–10805	16 – 6
90179–12802	12 – 11
90179–14001	12 – 24
90179–25002	20 – 8
90183–05014	36 – 11
90183–05807	17 – 5

PART NO.	REF. NO.
90183–05807	17 – 9
	18 – 14
	23 – 8
	27 – 6
	30 – 6
	30 – 17
	30 – 19
	30 – 21
90185–05803	17 – 15
90185–10011	27 – 4
90185–12804	26 – 30
90201–06078	30 – 28
	30 – 32
90201–061A5	30 – 34
90201–08055	7 – 6
90201–08116	7 – 7
90201–081J7	26 – 42
90201–10118	28 – 3
90201–12019	12 – 10
90201–122H1	31 – 6
90201–12688	26 – 31
90201–127F4	15 – 10
90201–12824	15 – 14
90201–12834	19 – 5
90201–15700	13 – 7
	13 – 19
90201–167P7	12 – 5
90201–178D3	15 – 21
90201–19801	11 – 5
90202–10800	26 – 41
90206–14093	26 – 14
90209–17285	13 – 4
90209–18208	13 – 14
90249–12008	29 – 10
90269–06812	27 – 10
90280–03017	2 – 6
90338–07800	16 – 7
90340–12816	5 – 3
90340–14812	9 – 7
90387–06237	30 – 29
90387–06803	6 – 26
90387–06857	17 – 3
	20 – 11
90387–068L6	18 – 12
90387–07789	30 – 8
90387–08812	29 – 40
90387–10277	24 – 7
90387–12868	26 – 19

PART NO.	REF. NO.
90387–12872	26 – 33
90387–15817	13 – 23
90387–20810	12 – 12
90401–10812	28 – 2
90430–10806	39 – 7
90430–10807	1 – 5
90430–12803	5 – 4
90464–07018	30 – 22
90464–08008	17 – 12
90464–12001	17 – 11
90464–17003	22 – 12
90464–25003	23 – 15
90464–36800	27 – 21
	33 – 7
	37 – 3
	38 – 14
	38 – 19
90464–50804	38 – 21
90464–70800	38 – 20
90467–110A3	6 – 22
90467–12802	6 – 24
90467–13064	6 – 28
	8 – 4
90480–01559	29 – 27
	29 – 36
90480–12808	18 – 11
90480–13815	30 – 30
90480–14806	23 – 9
90480–16004	36 – 10
90501–04805	12 – 9
90501–06022	14 – 6
90501–06800	14 – 10
90501–10245	29 – 9
90501–125E9	15 – 13
90506–12001	26 – 10
90506–15001	26 – 11
90506–23809	29 – 17
90506–35806	29 – 5
90508–26815	14 – 8
90520–02005	18 – 6
	18 – 9
	30 – 13
90520–02806	22 – 4
90520–02829	27 – 2
90520–08803	36 – 13
90520–15820	17 – 10
90520–15821	30 – 10
90520–20834	30 – 4

PART NO.	REF. NO.
90560–10292	24 – 2
90560–12145	26 – 2
91312–06012	11 – 7
91317–06025	28 – 17
91332–05010	22 – 10
91332–06012	13 – 12
91332–06016	31 – 4
91332–06020	6 – 3
91332–06025	31 – 3
91337–08020	15 – 25
91402–20012	26 – 44
	29 – 12
	29 – 26
	29 – 35
91490–20030	29 – 4
91702–06035	29 – 25
	29 – 34
92012–05016	27 – 16
92902–06600	29 – 13
93101–10841	9 – 21
93102–12891	15 – 5
93102–16801	10 – 13
93102–20892	13 – 26
93106–20816	24 – 3
93106–26815	26 – 20
93210–068E9	15 – 18
93210–12801	4 – 3
93210–14104	26 – 8
93210–14899	9 – 8
93210–198F0	9 – 20
93210–21802	39 – 4
93210–29574	6 – 2
93210–29803	32 – 6
93210–29805	32 – 6
93210–41041	26 – 5
93210–59800	5 – 11
93306–002YE	13 – 24
93306–002YW	4 – 4
93306–004XV	26 – 21
93306–054Y2	13 – 9
93306–054YM	4 – 2
93306–204YC	13 – 25
93306–252XN	13 – 10
93306–300YF	24 – 4
93306–301Y8	26 – 3
93306–301YM	26 – 4
93306–305XA	2 – 5
93310–419X6	11 – 4

PART NO.	REF. NO.
93310–528YA	2 – 3
93340–212Y2	15 – 11
93410–20809	13 – 5
93410–22039	13 – 15
93440–10153	1 – 3
93450–14088	2 – 9
93503–16807	12 – 27
93604–10011	15 – 12
93604–12831	14 – 4
93606–10800	12 – 8
93608–34800	11 – 2
93608–50149	15 – 6
93822–14838	13 – 27
93900–00817	24 – 6
	26 – 28
94107–17872	24 – 5
94108–17867	26 – 27
94568–A6090	4 – 8
94568–D1105	26 – 37
94668–D1001	26 – 38
94700–00372	1 – 12
95302–06600	26 – 36
95302–08700	29 – 16
95304–08700	26 – 43
95307–06600	26 – 17
9530N–03600	34 – 4
95602–06100	28 – 15
95602–10200	24 – 9
95602–12200	19 – 6
95612–08625	1 – 6
95702–06500	15 – 19
	23 – 5
95702–08500	7 – 8
95702–12500	31 – 5
95812–10120	16 – 3
95D02–06010	35 – 5
	39 – 14
95D02–06012	20 – 19
95D02–06016	9 – 11
95D02–08020	7 – 5
95D32–06012	30 – 33
95D32–06016	23 – 18
95D32–06025	6 – 12
95D32–06030	1 – 8
95D32–08016	29 – 19
	29 – 42
95D32–08035	29 – 29
	29 – 38

PART NO.	REF. NO.
95D32–08040	7 – 9
95D37–08020	29 – 28
	29 – 37
95E32–06010	13 – 29
	20 – 14
95E32–06014	38 – 18
95E32–06016	6 – 5
	20 – 12
	38 – 2
95E32–06020	4 – 14
	5 – 9
	20 – 16
95E32–06025	23 – 11
	39 – 10
95E32–06040	8 – 8
	9 – 16
95E32–06050	9 – 5
	9 – 18
95E32–06055	8 – 7
95E32–06060	9 – 6
95E32–06100	5 – 10
95E32–10014	1 – 4
95E37–06030	9 – 17
97002–06020	30 – 27
97022–06020	17 – 4
97027–06035	26 – 16
97602–04312	28 – 18
97602–05310	38 – 11
97702–40620	36 – 2
97702–50012	17 – 6
	27 – 8
	30 – 18
	36 – 9
97702–50016	18 – 2
	18 – 4
	18 – 7
	18 – 10
	18 – 16
	27 – 9
	30 – 5
	30 – 20
	30 – 24
	33 – 6
	34 – 5
97702–50030	6 – 20
98502–05010	23 – 16
98502–05016	39 – 5
98502–05025	27 – 19

PART NO.	REF. NO.
98502–06012	23 – 13
98902–06012	30 – 31
98907–06020	30 – 7
99009–15400	13 – 8
	13 – 20
99009–17400	15 – 20
99009–19400	10 – 6
99530–10114	1 – 14
	8 – 6
	8 – 9
	9 – 3
	9 – 15