YAMAHA

PARTS CATALOGUE

MDNCM1

RYC1

MS1

VOM2

T150 (B17D) MALAYSIA

YAMAHA GENUINE Parts & Accessories

1YB17-440E1

( )

T150
PARTS CATALOGUE
©2022 by Yamaha Motor Co., Ltd.
1st edition, December 2022
All rights reserved.
Any reprinting or unauthorized use
without the written permission of
Yamaha Motor Co., Ltd.
is expressly prohibited.
Printed in Japan.

FOREWORD

This Parts Catalogue is related to the parts for the model(s) on the cover page. When you are ordering replacement parts, please refer to this Parts Catalogue and quote both part numbers and part names correctly.

1. Modifications or additions which have been made after the issue of the Parts Catalogue will be announced in the Parts News.
   It is advisable that you make the necessary corrections to the Parts Catalogue according to the Parts News.

2. Abbreviations
   The following abbreviations are used in this Parts Catalogue.

   "UR" Use specified parts number.

   "UN" Use as many as needed.

   "AP" Alternate Parts

   "LM" Locally Made (Parts need to be ordered locally)

   "F#" Frame No. (Applicable machine No.)

   "O/S" Over Size

3. The number of components for assembly
   - Parts, which are to be supplied in an assembly, are listed with a dot (.) in front of the part name as shown below.
   - The numeral appearing to the right of each component part indicates the quantity of parts for each assembly unit.

PART NO.	DESCRIPTION	Q'TY	REMARKS
2F5–83310–60	FRONT FLASHER LIGHT ASSY	2	
115–83311–60	.BULB (6V–18W)	1	

4. Applicable colours of graphics are represented in the "REMARKS" as shown below.

PART NO.	DESCRIPTION	Q'TY	REMARKS
2N4–24110–00–X5	FUEL TANK COMP.	2	MXR
3J1–24240–10	.GRAPHIC, FUEL TANK	1	FOR MXR

5. Note that the illustrations for reference in finding parts numbers are not to be used for assembling. When assembling, please use the applicable service manual.

6. The asterisk (*) before a reference number indicates modified items after the first edition.

7. Applicable Serial No.

Frame Serial No.

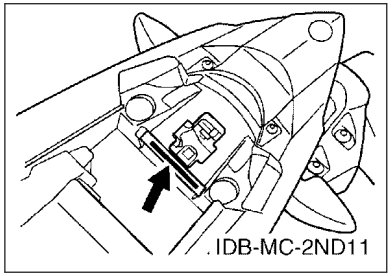

Engine Serial No.

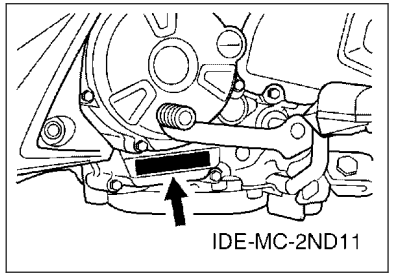

8. Applicable Colour Code (The (*) mark shows Model colour.)

Abbreviation	Colour Name	Colour Code
MBL2	MAT BLACK 2	0582
MBM3	MAT BLUE METALLIC 3	0960
MDNCM1(*)	MAT DARK GRAYISH CYAN ME 1	1811
MS1(*)	MAT SILVER 1	1160
NG	NEBURA GOLD	008L
RYC1(*)	REDDISH YELLOW COCKTAIL 1	0251
SMX	BLACK METALLIC X	0903
VOM2(*)	VIVID ORANGE METALLIC 2	0552
YB	YAMAHA BLACK	0033

9. Applicable Starting Serial No.

Frame Serial No.

Serial No.	Name Of Q’ty Column	Model Code

Engine Serial No.

Serial No.	Name Of Q’ty Column	Model Code

CONTENTS

ENGINE

CYLINDER HEAD....1
CRANKSHAFT & PISTON....2
VALVE....4
CAMSHAFT & CHAIN....5
WATER PUMP....6
RADIATOR & HOSE....7
OIL PUMP....8
INTAKE....9
EXHAUST....11
CRANKCASE....12
CRANKCASE COVER 1....13
STARTER CLUTCH....14
CLUTCH....15
TRANSMISSION....16
SHIFT CAM & FORK....18
SHIFT SHAFT....19

CHASSIS

FRAME....20
FENDER....21
SIDE COVER....22
REAR ARM & SUSPENSION....24
STEERING....25
FRONT FORK....26
FUEL TANK....28
SEAT....29
FRONT WHEEL....30
FRONT BRAKE CALIPER....31
REAR WHEEL....32
REAR BRAKE CALIPER....34
STEERING HANDLE & CABLE....35
FRONT MASTER CYLINDER....37
STAND & FOOTREST....38
REAR MASTER CYLINDER....40
LEG SHIELD....42
GENERATOR....46
STARTING MOTOR....47
FLASHER LIGHT....48
METER....49
HEADLIGHT....50
TAILLIGHT....51
HANDLE SWITCH & LEVER....52
ELECTRICAL 1....53
ELECTRICAL 2....54

INDEX

NUMERICAL INDEX....55

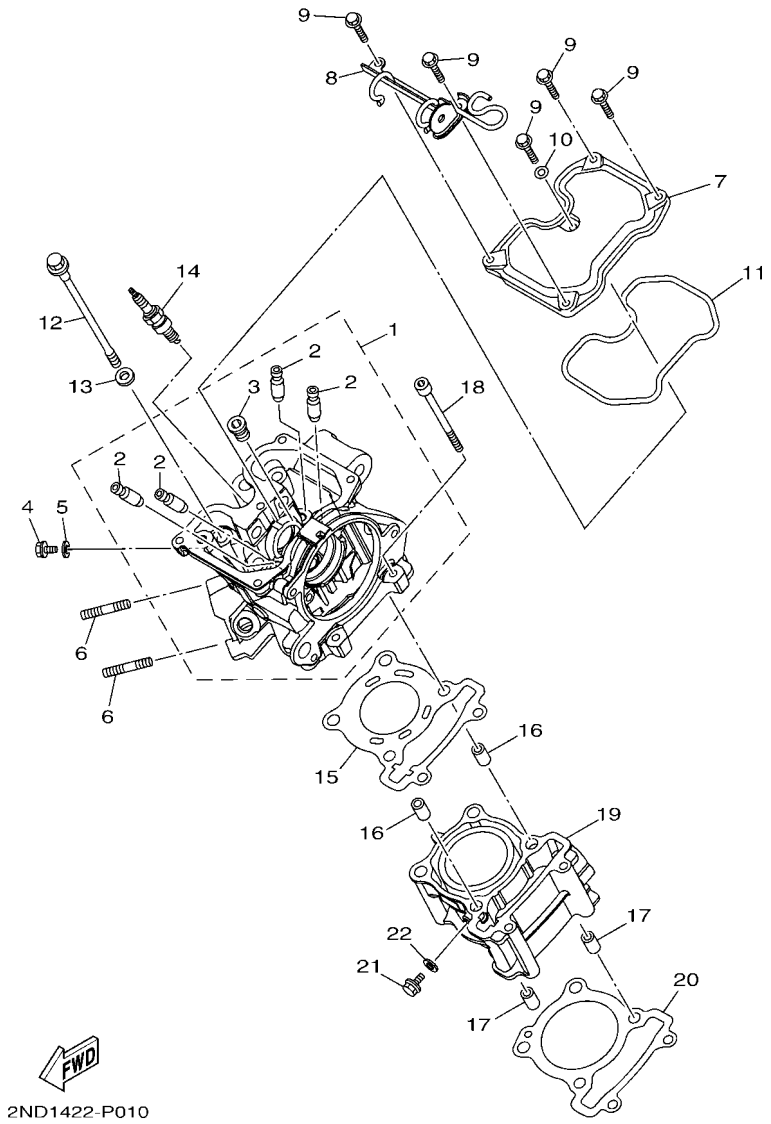

FIG. 1 CYLINDER HEAD

REF. NO.	PART NO.	DESCRIPTION	B17D					REMARKS
1	B17–E1102–01	CYLINDER HEAD ASSY	1					
2	1S7–E1133–10	.GUIDE, VALVE 1	4					
3	90340–12813	.PLUG, STRAIGHT SCREW	1					
4	95E32–06010	BOLT, FLANGE DEEP RECESS	1					
5	90430–06803	GASKET	1					
6	95612–08630	BOLT, STUD	2					
7	B17–E1191–00	COVER, CYLINDER HEAD 1	1					
8	2PV–E2443–00	STAY	1					
9	95E32–06020	BOLT, FLANGE DEEP RECESS	5					
10	90430–06803	GASKET	1					
11	2PV–E1193–00	GASKET, HEAD COVER 1	1					
12	2PV–E1361–00	BOLT, CYLINDER HOLDING 1	4					
13	90201–08859	WASHER, PLATE	4					
14	94700–00330	PLUG, SPARK (NGK R CR8E)	1					
15	2PV–E1181–00	GASKET, CYLINDER HEAD 1	1					
16	91810–14809	PIN, DOWEL	2					
17	91810–14809	PIN, DOWEL	2					
18	91312–06100	BOLT, HEXAGON SOCKET HEAD	2					
19	2PV–E1311–10	CYLINDER 1	1					
20	1S8–E1351–00	GASKET, CYLINDER	1					
21	95E32–06010	BOLT, FLANGE DEEP RECESS	1					
22	90430–06803	GASKET	1					

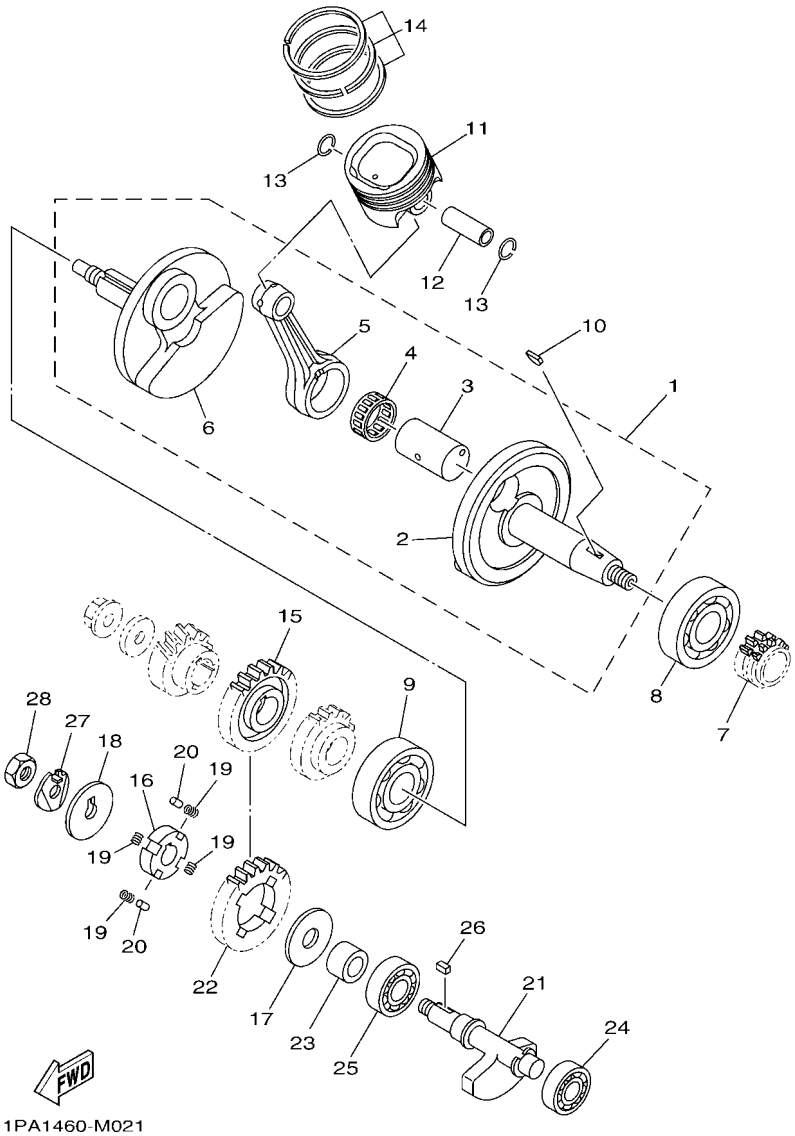

FIG. 2 CRANKSHAFT & PISTON

REF. NO.	PART NO.	DESCRIPTION	B17D					REMARKS
1	B17–E1400–00	CRANKSHAFT ASSY	1					
2	B17–E1412–00	.CRANK 1	1					UR
	2ND–E1412–00	.CRANK 1	1					UR
3	3C1–E1681–10	.PIN, CRANK 1	1					
4	93310–528YK	.BEARING	1					
5	3C1–E1651–11	.ROD, CONNECTING	1					
6	B17–E1422–00	.CRANK 2	1					UR
	2ND–E1422–00	.CRANK 2	1					UR
7	3C1–E1549–10	SPROCKET, CAM CHAIN	1					
8	93306–305XP	BEARING	1					UR
	93306–305YF	BEARING	1					UR
9	93306–305XR	BEARING	1					UR
	93306–305X7	BEARING	1					UR
10	90280–03017	KEY, WOODRUFF	1					
11	2ND–E1631–00	PISTON (STD)	1					
12	2ND–E1633–00	PIN, PISTON	1					
13	93450–16115	CIRCLIP	2					
14	2PV–E1603–00	PISTON RING SET (STD)	1					
15	BK6–E1536–00	GEAR, DRIVE	1					
16	21C–E1496–20	BOSS, BUFFER	1					
17	90201–15821	WASHER, PLATE	1					
18	90214–10800	WASHER, CLAW	1					
19	90501–16800	SPRING, COMPRESSION	4					
20	93604–08071	PIN, DOWEL	2					
21	2FB–E1454–00	WEIGHT 1	1					
22	BK6–E1531–10	GEAR, BALANCE WEIGHT	1					
23	90387–15810	COLLAR	1					

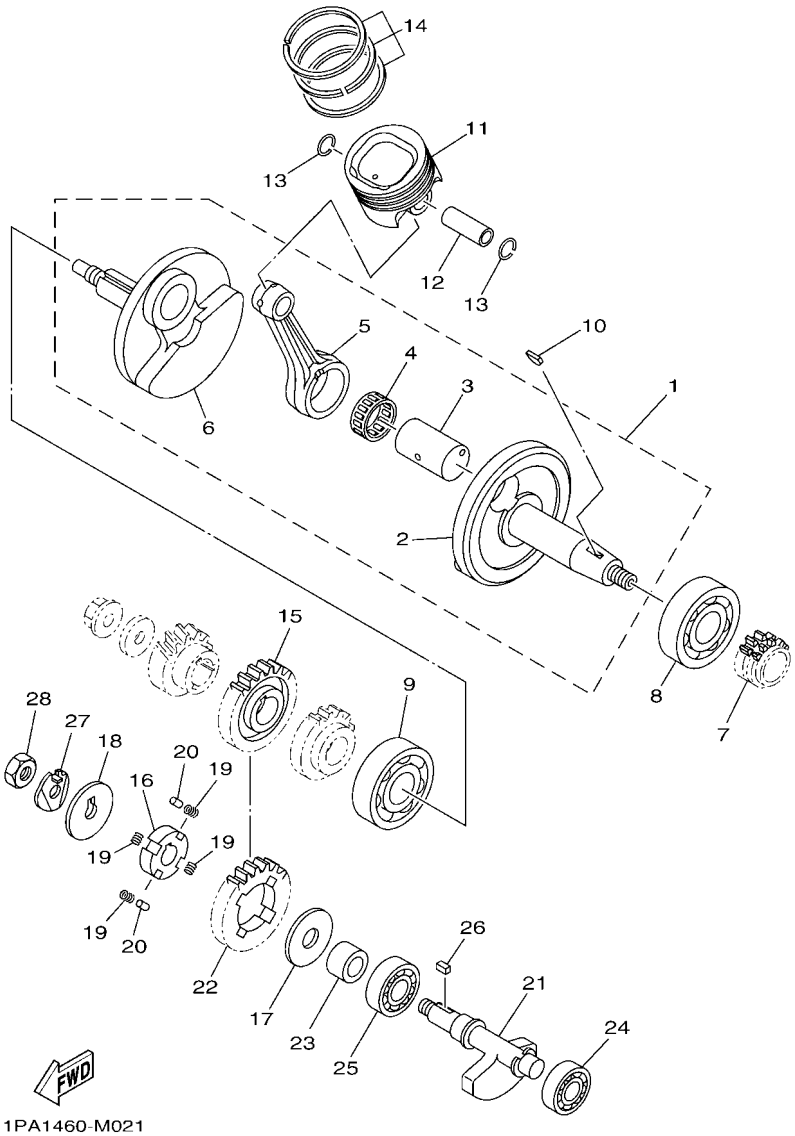

FIG. 2 CRANKSHAFT & PISTON

REF. NO.	PART NO.	DESCRIPTION	B17D					REMARKS
24	93306–252Y9	BEARING	1					
25	93306–253YB	BEARING	1					
26	90282–05031	KEY, STRAIGHT	1					
27	90215–10284	WASHER, LOCK	1					
28	90170–10012	NUT	1					

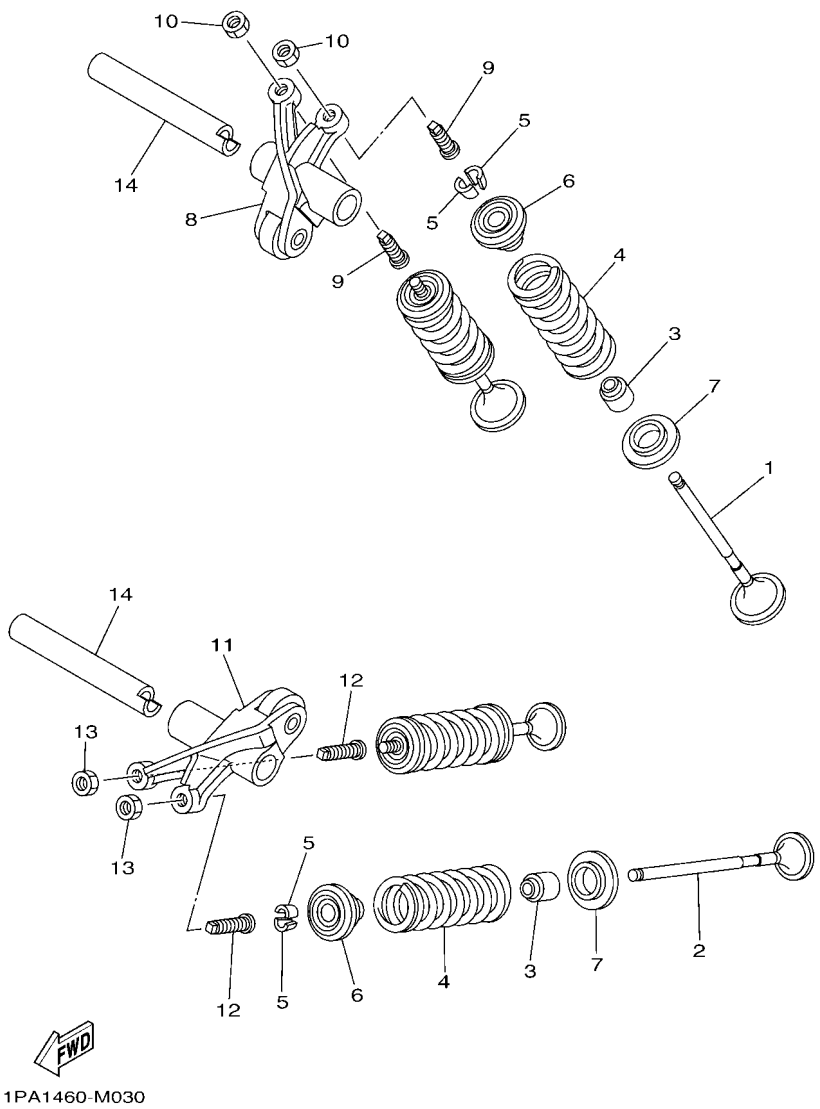

FIG. 3 VALVE

REF. NO.	PART NO.	DESCRIPTION	B17D					REMARKS
1	2PV–E2111–00	VALVE, INTAKE	2					
2	2PV–E2121–00	VALVE, EXHAUST	2					
3	1PA–E2119–00	SEAL, VALVE STEM	4					
4	B48–E2113–00	SPRING, VALVE INNER	4					
5	3S0–E2118–00	LOCK, VALVE SPRING RETAINER	8					
6	1PA–E2117–00	RETAINER, VALVE SPRING	4					
7	55P–E2126–00	SEAT, VALVE SPRING 2	4					
8	2ND–E2151–00	ARM, VALVE ROCKER	1					
9	2ND–E2159–00	SCREW, VALVE ADJUSTING	2					
10	90170–05803	NUT	2					
11	2ND–E2161–00	ARM, VALVE ROCKER 2	1					
12	2ND–E2159–00	SCREW, VALVE ADJUSTING	2					
13	90170–05803	NUT	2					
14	1CK–E2156–00	SHAFT, ROCKER 2	2					

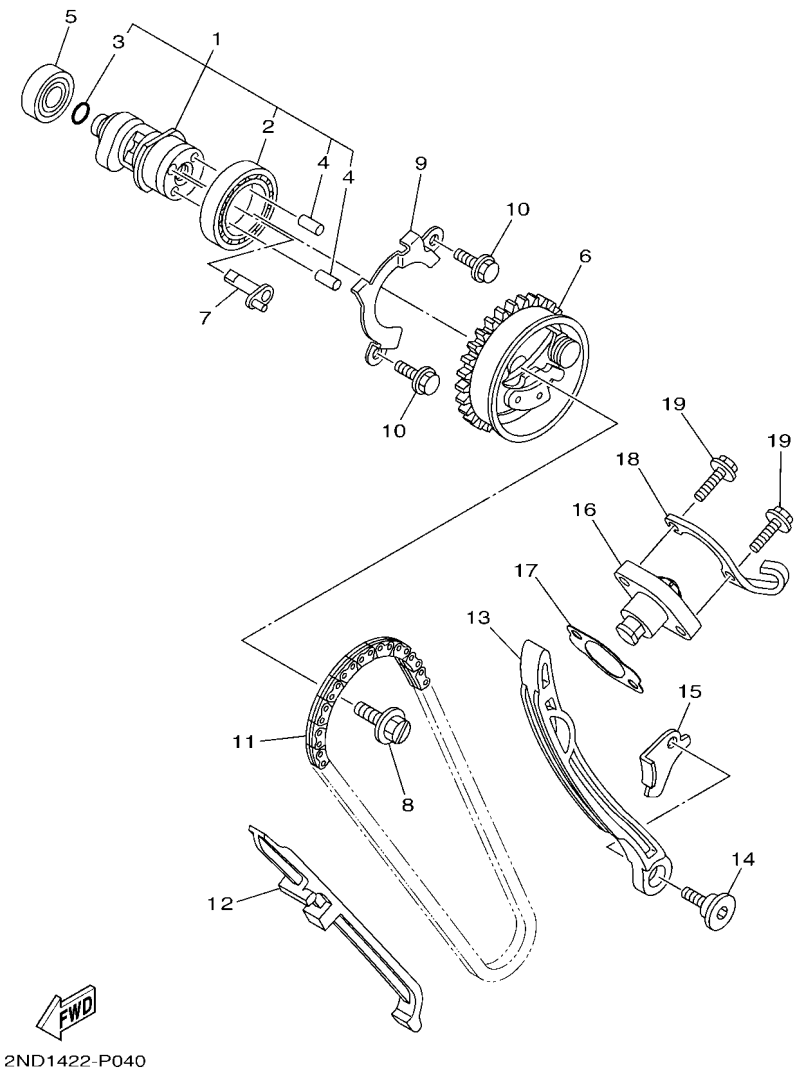

FIG. 4 CAMSHAFT & CHAIN

REF. NO.	PART NO.	DESCRIPTION	B17D					REMARKS
1	2PV–E2170–00	CAMSHAFT ASSY 1	1					
2	93306–906Y4	.BEARING	1					
3	93210–09806	.O-RING	1					
4	93605–06800	.PIN, DOWEL	2					
5	93306–001X6	BEARING	1					
6	2PV–E2280–00	DECOMPRESSION ASSY	1					
7	1S7–E2288–00	CAM, DECOMPRESSION	1					
8	5YP–E2157–01	BOLT	1					
9	1S8–E111F–00	PLATE	1					
10	95E32–06010	BOLT, FLANGE DEEP RECESS	2					
11	94568–H4096	CHAIN	1					
12	1PA–E2231–00	GUIDE, STOPPER 1	1					
13	2PV–E2241–00	GUIDE, STOPPER 2	1					
14	52B–E2228–00	BOLT	1					
15	3C1–E2256–00	COVER, CHAIN	1					
16	2ND–E2210–20	TENSIONER ASSY, CAM CHAIN	1					
17	2PV–E2213–00	GASKET, TENSIONER CASE	1					
18	2PV–E5441–00	HOLDER, CLUTCH CABLE	1					
19	95E32–06025	BOLT, FLANGE DEEP RECESS	2					

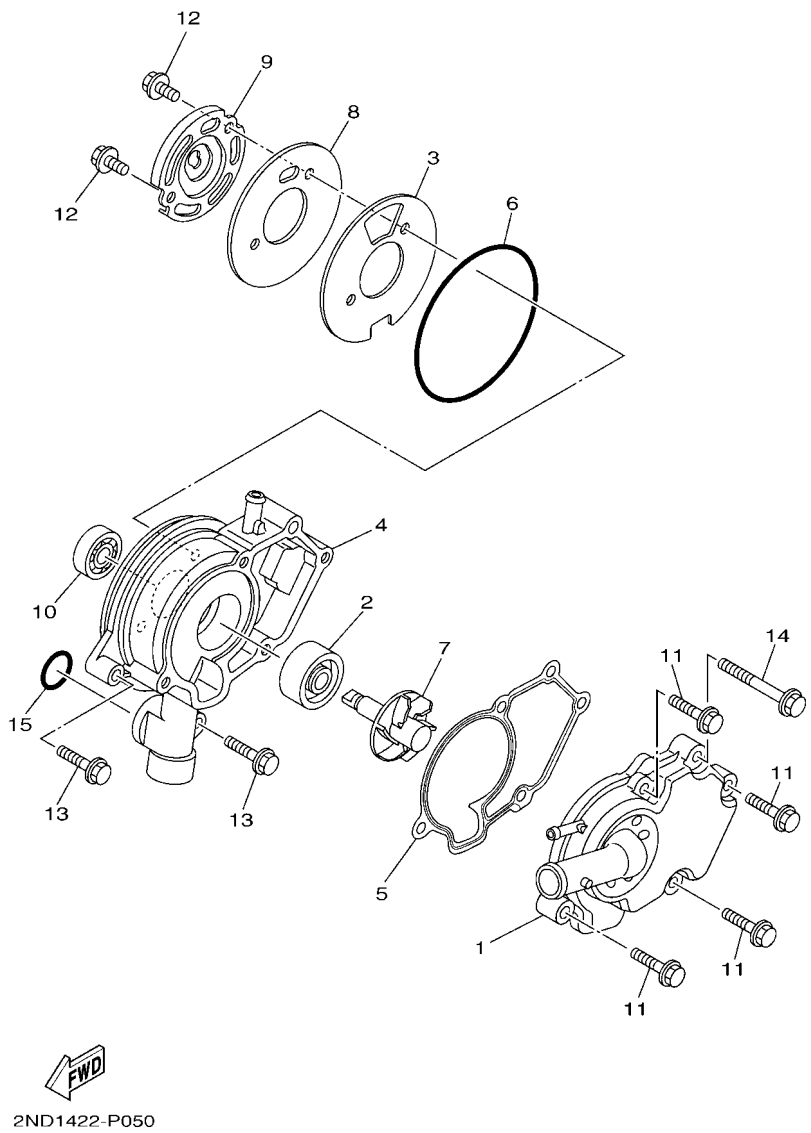

FIG. 5 WATER PUMP

REF. NO.	PART NO.	DESCRIPTION	B17D					REMARKS
1	2PV–E2422–00	COVER, HOUSING	1					
2	B63–E2223–00	SEAL	1					
3	2PV–E2428–00	GASKET, HOUSING COVER 2	1					
4	2PV–E1185–00	COVER, CYLINDER HEAD SIDE 3	1					
5	2ND–E1196–00	GASKET, CYLINDER HEAD SIDE	1					
6	93210–84804	O-RING	1					
7	1S7–E2450–01	IMPELLER SHAFT ASSY	1					
8	1S7–E1951–00	PLATE	1					
9	1S7–E1952–02	PLATE	1					
10	93306–000Y3	BEARING	1					
11	95022–06025	BOLT, FLANGE	4					
12	95022–06012	BOLT, FLANGE	2					
13	95E32–06025	BOLT, FLANGE DEEP RECESS	2					
14	95E32–06050	BOLT, FLANGE DEEP RECESS	1					
15	93210–19809	O-RING	1					

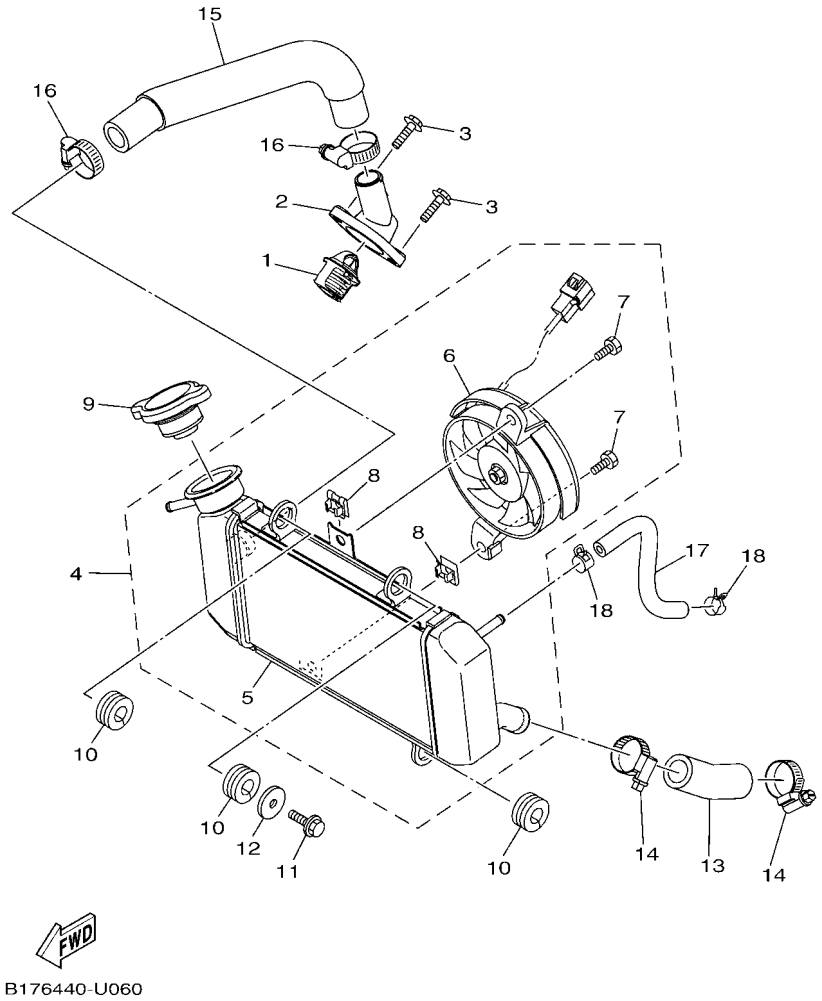

FIG. 6 RADIATOR & HOSE

REF. NO.	PART NO.	DESCRIPTION	B17D					REMARKS
1	5YP–12411–01	THERMOSTAT	1					
2	1S8–E2413–00	COVER, THERMOSTAT	1					
3	95E32–06020	BOLT, FLANGE DEEP RECESS	2					
4	2ND–E240A–10	RADIATOR ASSY	1					
5	2ND–E2461–00	.RADIATOR COMP	1					
6	2ND–E2405–10	.BLOWER ASSY	1					
7	2ND–E2675–00	.BOLT, BLOWER HOLDING	2					
8	2ND–E2671–00	.NUT 1	2					
9	2ND–E2590–10	CONDUCTION ASSY	1					
10	90480–15808	GROMMET	3					
11	95D32–06016	BOLT, FLANGE DEEP RECESS	1					
12	90201–06880	WASHER, PLATE	1					
13	B17–E2481–00	PIPE 1	1					
14	90450–27806	HOSE CLAMP ASSY	2					
15	B17–E2482–00	PIPE 2	1					
16	90450–27806	HOSE CLAMP ASSY	2					
17	2PV–E2576–00	HOSE 1	1					
18	90467–10805	CLIP	2					

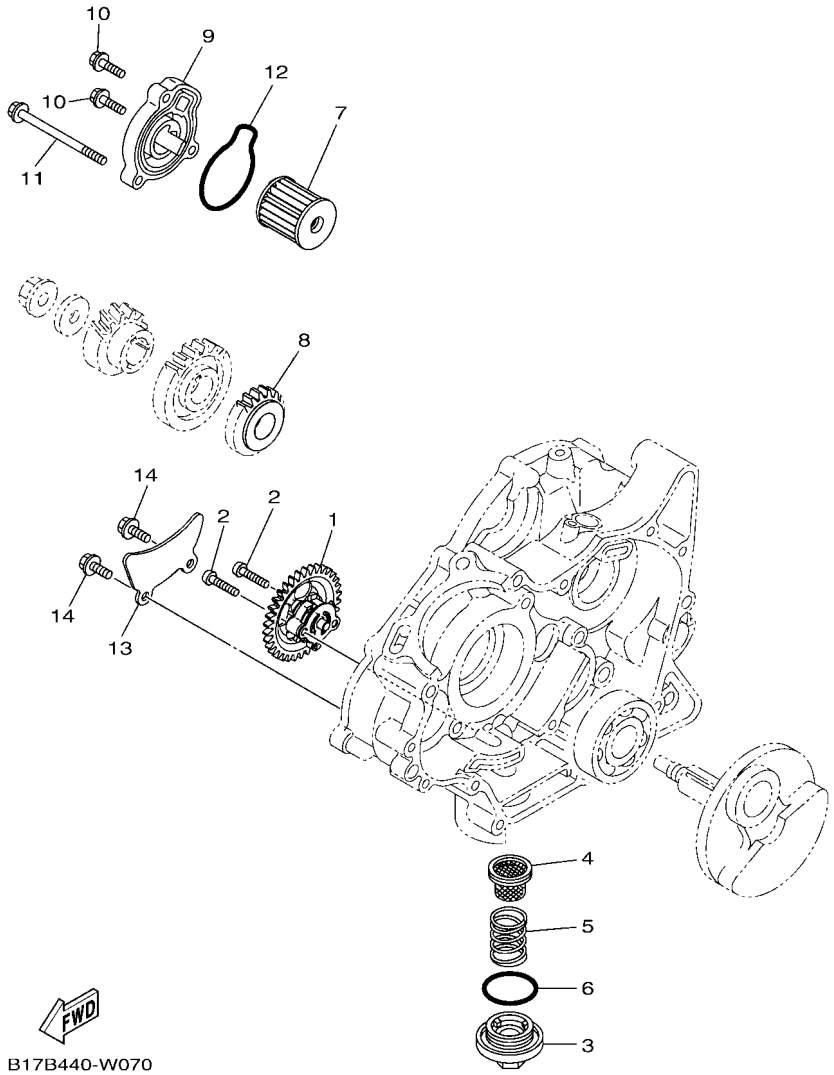

FIG. 7 OIL PUMP

REF. NO.	PART NO.	DESCRIPTION	B17D					REMARKS
1	2PV–E3300–01	OIL PUMP ASSY	1					
2	98502–05025	SCREW, PAN HEAD	2					
3	1S8–E5351–00	STRAIGHT SCREW BOLT	1					
4	38B–E3411–00	STRAINER, OIL	1					
5	90501–18576	SPRING, COMPRESSION	1					
6	93210–34802	O-RING	1					
7	38B–E3440–01	ELEMENT ASSY, OIL CLEANER	1					
8	2PV–E3324–00	GEAR, PUMP DRIVE	1					
9	55C–E3447–00	COVER, OIL ELEMENT	1					
10	95E32–06020	BOLT, FLANGE DEEP RECESS	2					
11	95E32–06080	BOLT, FLANGE DEEP RECESS	1					
12	93210–54805	O-RING	1					
13	3C1–E3327–00	COVER, PUMP GEAR	1					
14	95E32–06012	BOLT, FLANGE DEEP RECESS	2					

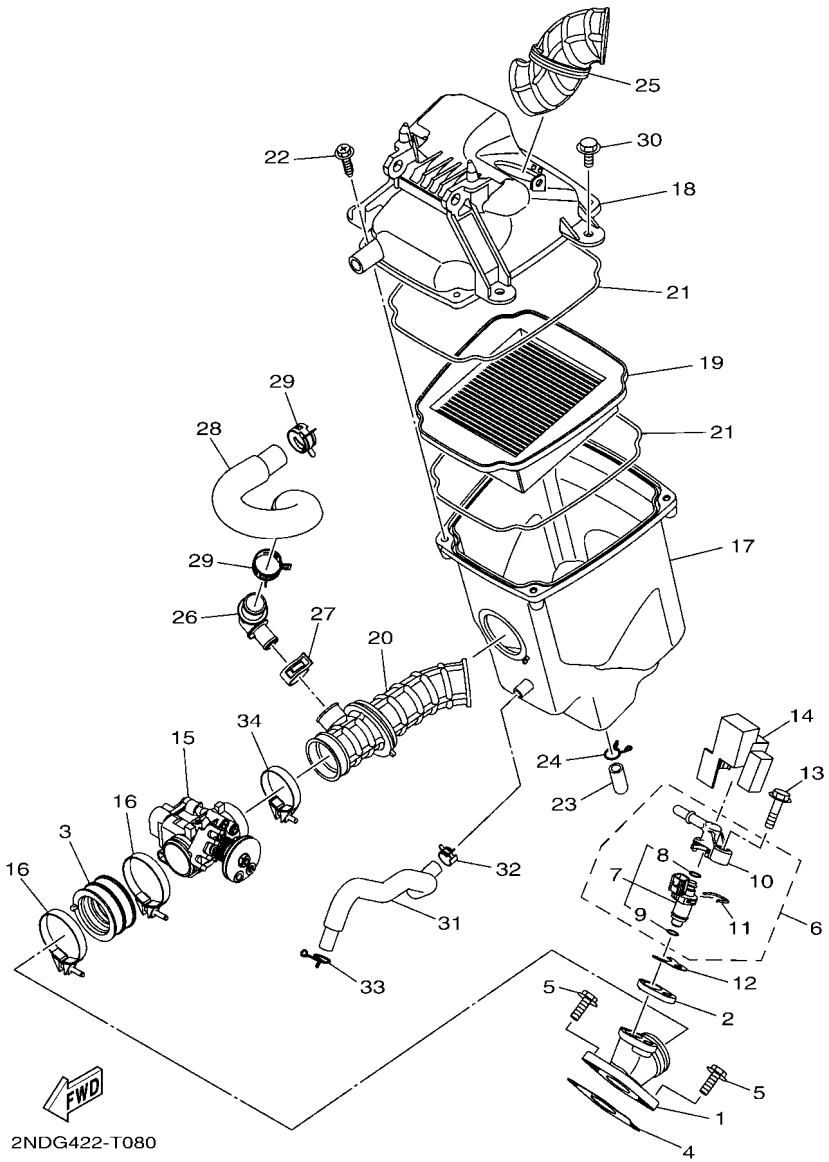

FIG. 8 INTAKE

REF. NO.	PART NO.	DESCRIPTION	B17D					REMARKS
1	2PV–E3585–00	MANIFOLD	1					
2	2FB–E3556–00	GASKET, MANIFOLD	1					
3	1PA–E3635–00	JOINT, INTAKE 1	1					
4	2PV–E4199–00	GASKET	1					
5	95E32–06020	BOLT, FLANGE DEEP RECESS	2					
6	BB8–E3770–10	INJECTOR ASSY	1					
7	BB8–E3761–10	.INJECTOR	1					
8	54P–E4147–00	..O-RING	1					
9	5CA–E4147–00	..O-RING	1					
10	54P–E3938–00	.PIPE	1					
11	54P–E4137–00	.CLIP	1					
12	2PV–E3557–00	GASKET	1					
13	95812–06030	BOLT, FLANGE	1					
14	BK6–E3767–00	CAP, INJECTOR	1					
15	2PV–E3750–02	THROTTLE BODY ASSY	1					
16	90450–48803	HOSE CLAMP ASSY	2					
17	2PV–E4411–00	CASE, AIR CLEANER 1	1					
18	2PV–E4412–00	CAP, CLEANER CASE 1	1					
19	2PV–E4450–00	ELEMENT ASSY, AIR CLEANER	1					
20	2PV–E4453–00	JOINT, AIR CLEANER 1	1					
21	3C1–E4452–00	SEAL	2					
22	90163–05803	SCREW, TAPPING	4					
23	5TL–E443E–00	PIPE, DRAIN	1					
24	90467–12800	CLIP	1					
25	2PV–E4437–10	DUCT	1					
26	3C1–E4485–00	PIPE, JOINT	1					
27	90467–20804	CLIP	1					

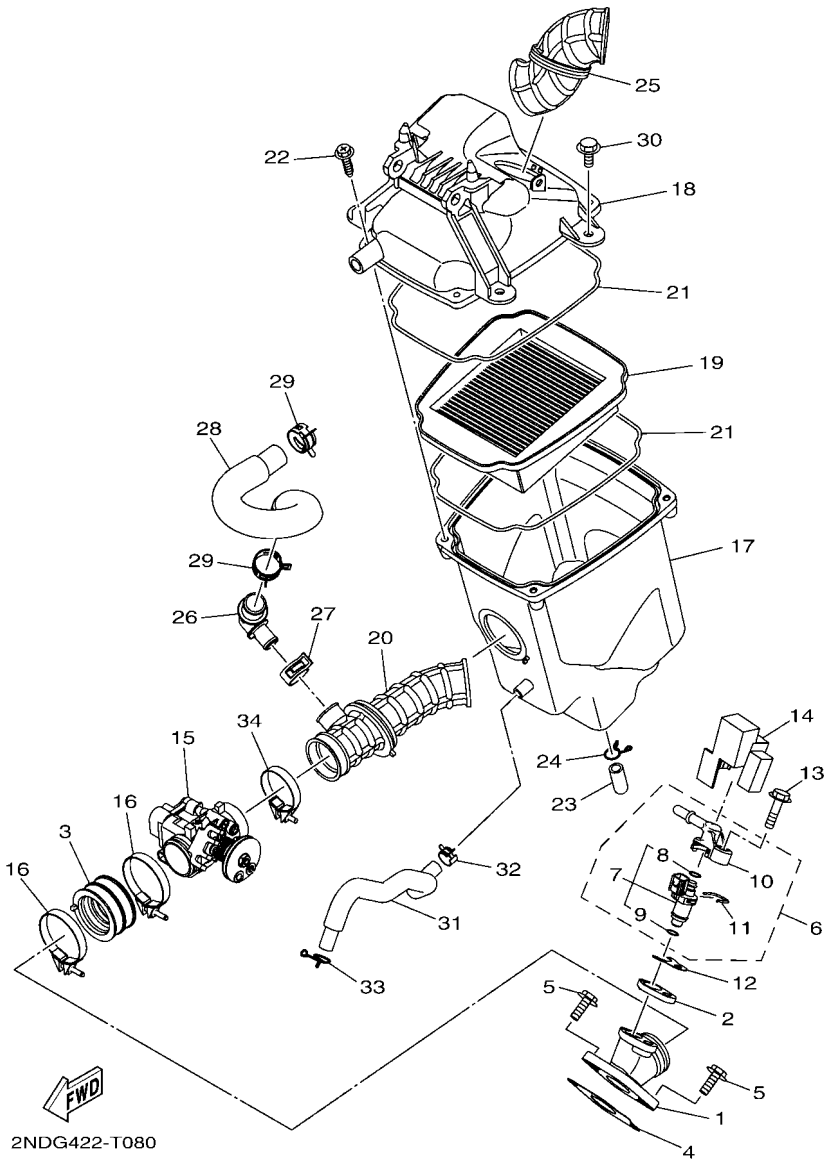

FIG. 8 INTAKE

REF. NO.	PART NO.	DESCRIPTION	B17D					REMARKS
28	2PV–E441J–01	PIPE, SILENCER	1					
29	90467–22801	CLIP	2					
30	90119–06137	BOLT, WITH WASHER	4					
31	2PV–E1166–01	PIPE, BREATHER 1	1					
32	90467–13064	CLIP	1					
33	90467–13858	CLIP	1					
34	90450–39806	HOSE CLAMP ASSY	1					

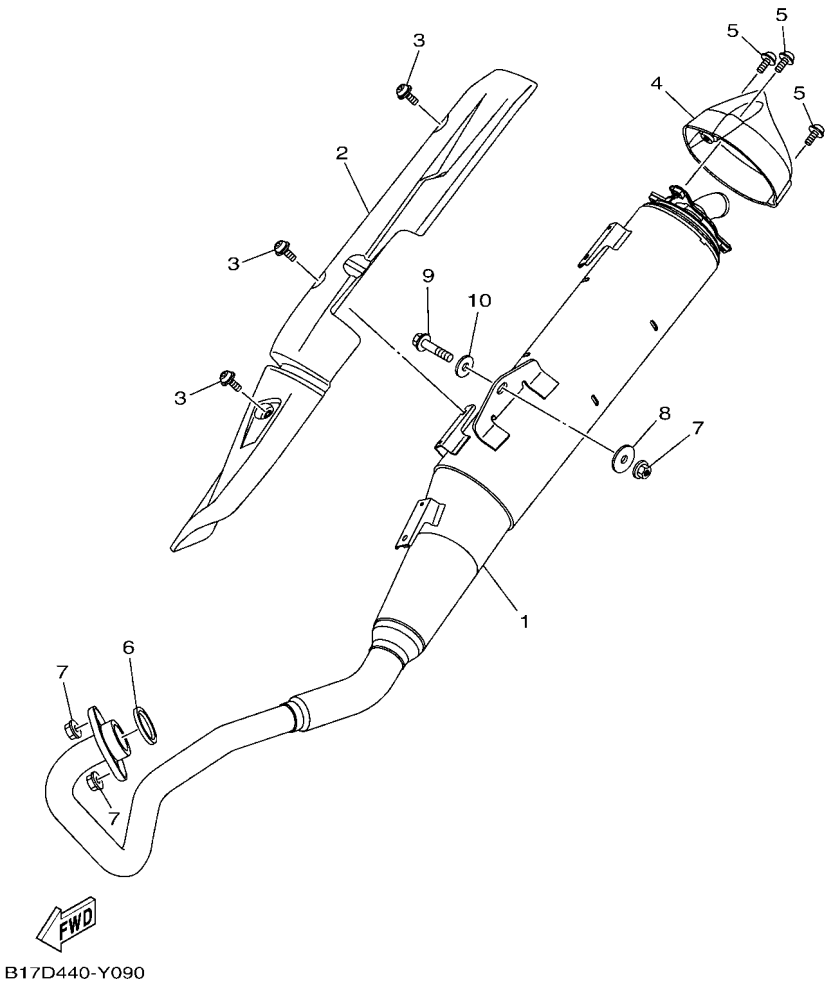

FIG. 9 EXHAUST

REF. NO.	PART NO.	DESCRIPTION	B17D					REMARKS
1	B17–E4703–10	MUFFLER COMP. 1	1					
2	B17–E4718–00	PROTECTOR, MUFFLER 1	1					
3	90111–06807	BOLT, HEXAGON SOCKET BUTTON	3					
4	B17–E4799–00	CAP	1					
5	90111–06807	BOLT, HEXAGON SOCKET BUTTON	3					
6	1S8–E4613–00	GASKET, EXHAUST PIPE	1					
7	95702–08500	NUT, FLANGE	3					
8	90201–08612	WASHER, PLATE	1					
9	95D32–08040	BOLT, FLANGE DEEP RECESS	1					
10	90201–08730	WASHER, PLATE	1					

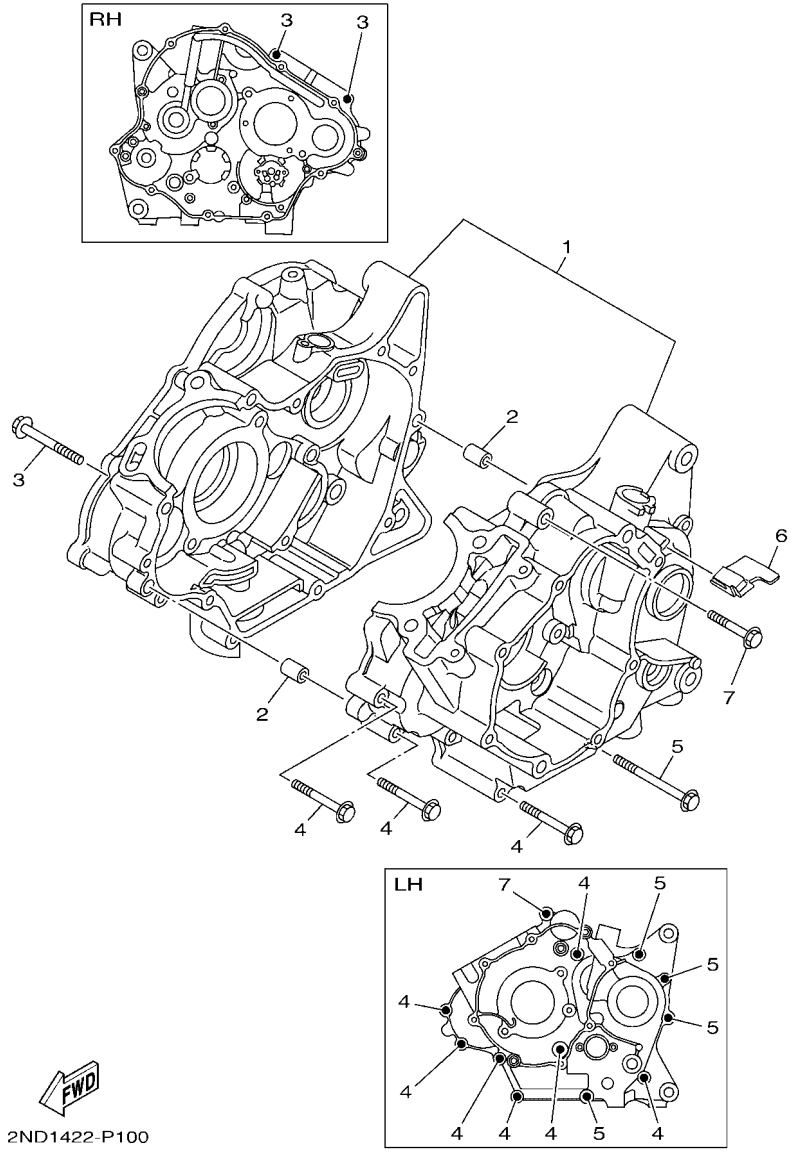

FIG. 10 CRANKCASE

REF. NO.	PART NO.	DESCRIPTION	B17D					REMARKS
1	B17–E5150–00	CRANKCASE ASSY	1					
2	91810–14809	PIN, DOWEL	2					
3	95E32–06055	BOLT, FLANGE DEEP RECESS	2					
4	95E32–06045	BOLT, FLANGE DEEP RECESS	7					
5	95E32–06070	BOLT, FLANGE DEEP RECESS	4					
6	55P–E5377–00	GUIDE, INLET	1					
7	95E32–06040	BOLT, FLANGE DEEP RECESS	1					

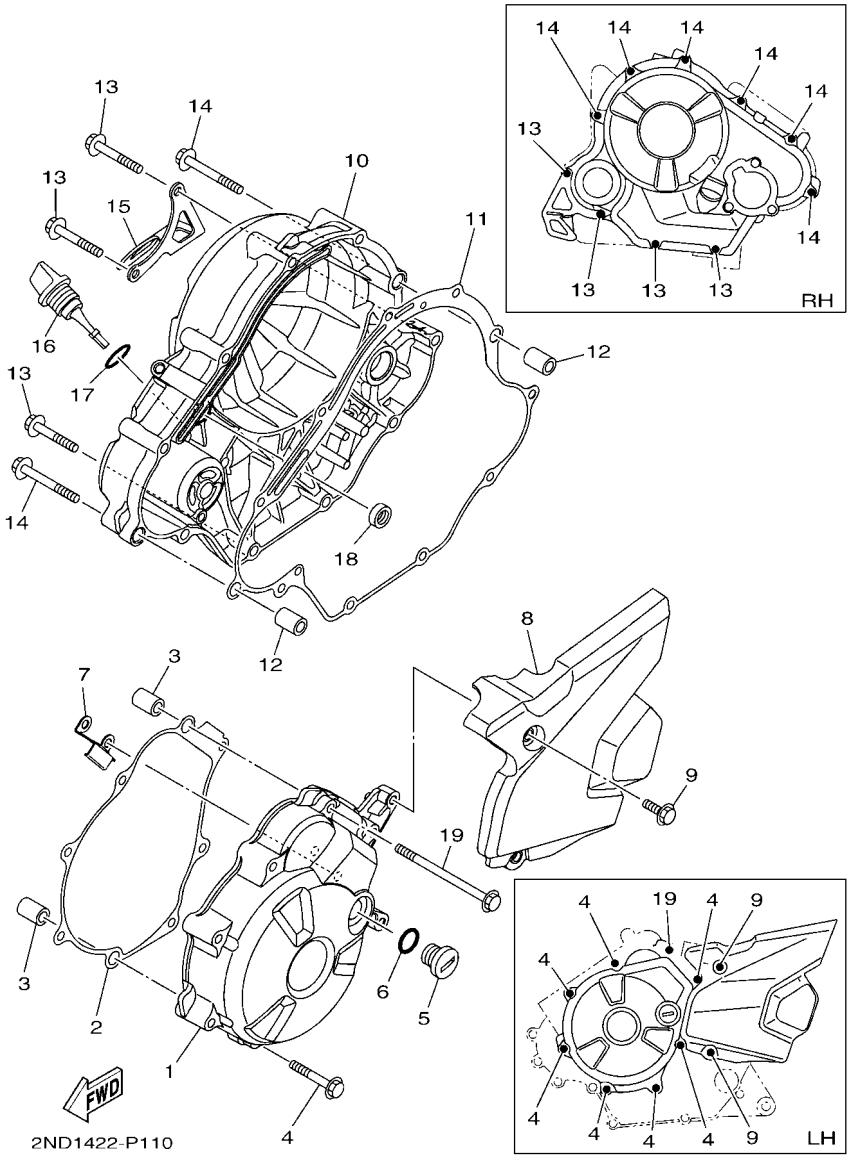

FIG. 11 CRANKCASE COVER 1

REF. NO.	PART NO.	DESCRIPTION	B17D					REMARKS
1	B17–E5411–00	COVER, CRANKCASE 1	1					
2	2PV–E5451–00	GASKET, CRANKCASE COVER 1	1					
3	91810–14809	PIN, DOWEL	2					
4	95E32–06040	BOLT, FLANGE DEEP RECESS	7					
5	90340–14824	PLUG, STRAIGHT SCREW	1					
6	93210–148F8	O-RING	1					
7	2PV–E5113–00	PLATE	1					
8	B17–E5418–00	COVER, CHAIN CASE	1					
9	95E32–06016	BOLT, FLANGE DEEP RECESS	2					
10	B17–E5421–00	COVER, CRANKCASE 2	1					
11	2PV–E5461–00	GASKET, CRANKCASE COVER 2	1					
12	91810–14809	PIN, DOWEL	2					
13	95E32–06040	BOLT, FLANGE DEEP RECESS	4					
14	95E32–06050	BOLT, FLANGE DEEP RECESS	6					
15	B17–E5142–00	GUIDE 1	1					
16	3C1–E5362–00	PLUG, OIL LEVEL	1					
17	93210–19809	O-RING	1					
18	93101–10843	OIL SEAL	1					
19	95E32–06090	BOLT, FLANGE DEEP RECESS	1					

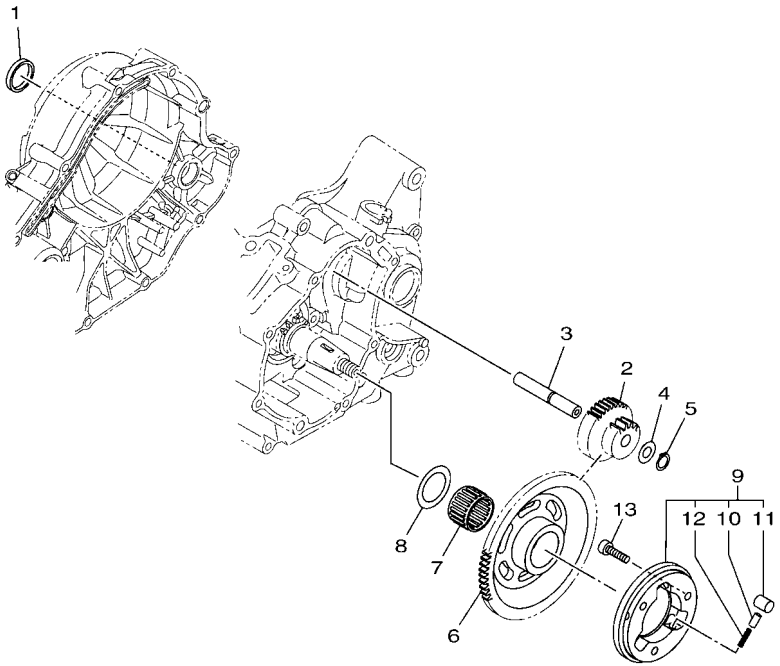

B17A440-V120

FIG. 12 STARTER CLUTCH

REF. NO.	PART NO.	DESCRIPTION	B17D					REMARKS
1	90338–30802	PLUG	1					
2	B17–E5514–00	GEAR 2	1					
3	38B–E5521–00	SHAFT 1	1					
4	90201–105E8	WASHER, PLATE	1					
5	99009–10400	CIRCLIP	1					
6	2PV–E5524–10	WHEEL, STARTER	1					
7	93310–325X1	BEARING	1					
8	90201–25290	WASHER, PLATE	1					
9	2PV–E5580–00	STARTER CLUTCH OUTER ASSY	1					UR
	5YP–E5580–00	STARTER CLUTCH OUTER ASSY	1					UR
10	2PH–E5583–10	.CAP, STARTER CLUTCH SPRING	3					UR
	5HV–E5583–00	.CAP, STARTER CLUTCH SPRING	3					UR
11	1ST–E5614–00	.PIN, DOWEL	3					UR
	5YP–E5614–00	.PIN, DOWEL	3					UR
12	2PV–E5572–00	.SPRING, RETURN	3					UR
	90501–030A0	.SPRING, COMPRESSION	3					UR
13	90110–06873	BOLT, HEXAGON SOCKET HEAD	3					

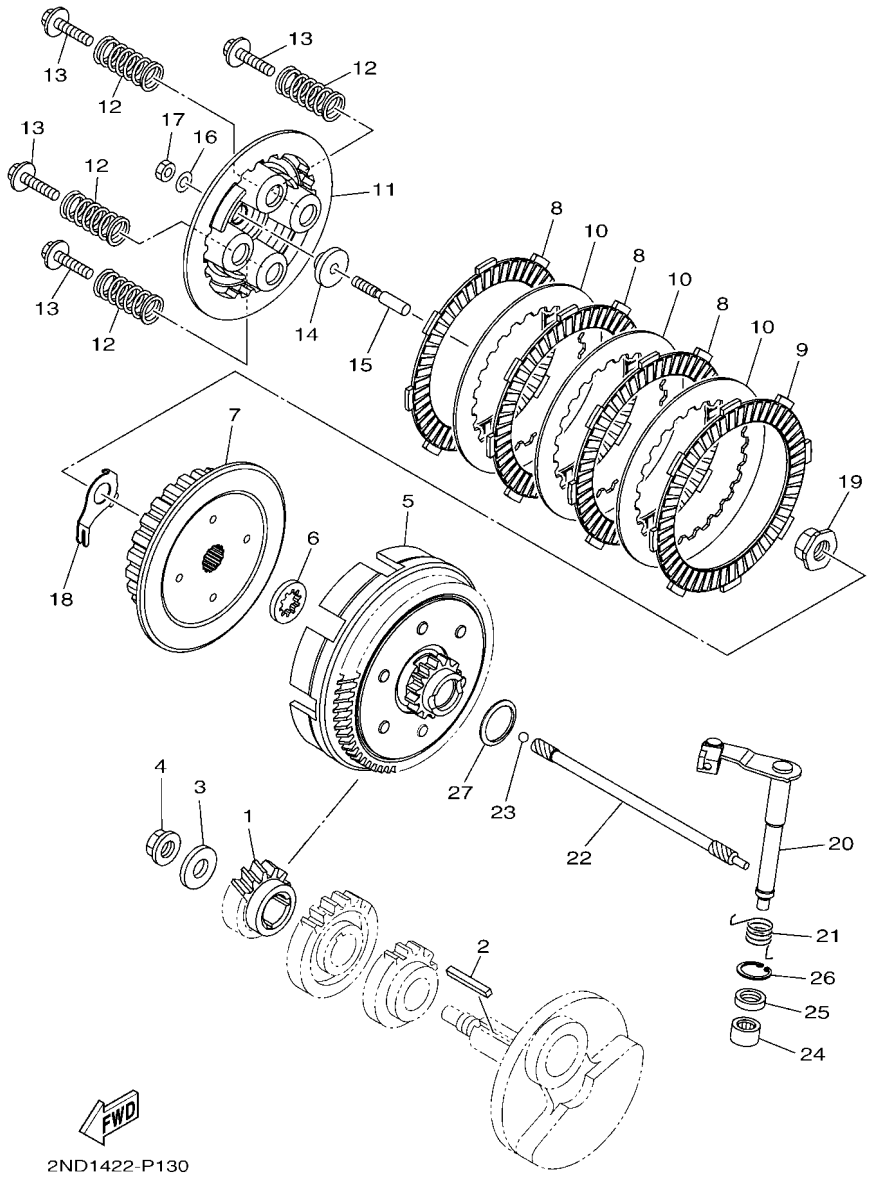

FIG. 13 CLUTCH

REF. NO.	PART NO.	DESCRIPTION	B17D					REMARKS
1	3C1–E6111–00	GEAR, PRIMARY DRIVE	1					
2	38B–E6193–00	KEY, FEATHER	1					
3	90201–12019	WASHER, PLATE	1					
4	90179–12808	NUT	1					
5	2PV–E6150–00	PRIMARY DRIVEN GEAR COMP.	1					
6	2ND–E6154–00	PLATE, THRUST 1	1					
7	45P–E6371–00	BOSS, CLUTCH	1					
8	2PV–E6321–00	PLATE, FRICTION	3					
9	2UP–E6331–00	PLATE, FRICTION 2	1					
10	2PV–E6324–00	PLATE, CLUTCH 1	3					
11	45P–E6351–00	PLATE, PRESSURE 1	1					
12	2ND–E6333–00	SPRING, CLUTCH 1	4					
13	45P–E6337–00	SCREW, SPRING	4					
14	2ND–E6358–00	PLATE, PUSH	1					
15	45P–E6356–00	ROD, PUSH 1	1					
16	3C1–E6144–00	WASHER	1					
17	3C1–E6344–00	NUT, ADJUSTING	1					
18	45P–E6135–00	WASHER, LOCK	1					
19	90179–14001	NUT	1					
20	2ND–E6380–00	PUSH LEVER ASSY	1					
21	2PV–E6345–00	SPRING, RETURN	1					
22	1PA–E6357–00	ROD, PUSH 2	1					
23	93505–16844	BALL	1					
24	93315–112Y9	BEARING	1					
25	93102–12862	OIL SEAL	1					
26	99009–20500	CIRCLIP	1					
27	90208–20003	WASHER, CONICAL SPRING	1					

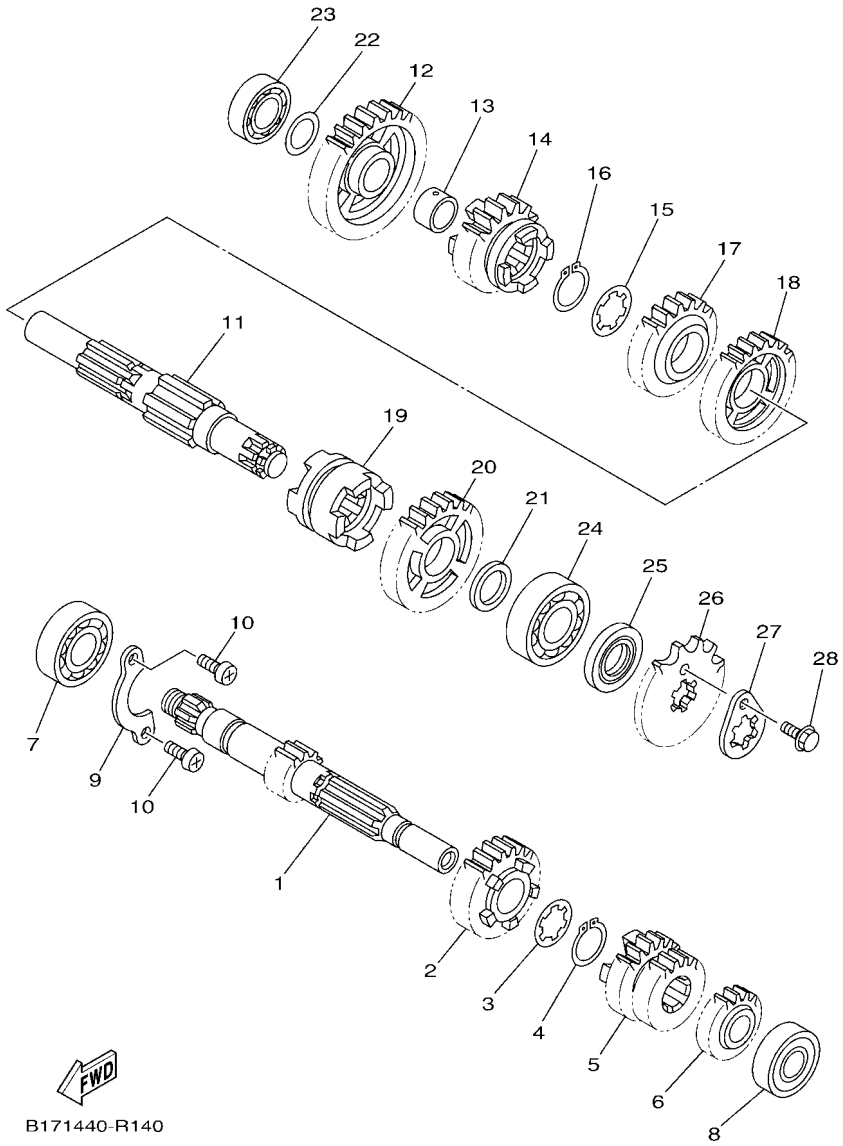

FIG. 14 TRANSMISSION

REF. NO.	PART NO.	DESCRIPTION	B17D					REMARKS
1	2ND–E7411–00	AXLE, MAIN (12T)	1					
2	2ND–E7151–00	GEAR, 5TH PINION (23T)	1					
3	90209–17285	WASHER	1					
4	93410–20809	CIRCLIP	1					
5	2ND–E7131–00	GEAR, 3RD PINION (21T/21T)	1					
6	55P–E7121–00	GEAR, 2ND PINION (16T)	1					
7	93306–054XB	BEARING	1					
8	933A6–202X0	BEARING	1					
9	3C1–E7471–00	PLATE, COVER	1					
10	98512–06012	SCREW, PAN HEAD	2					
11	2ND–E7402–20	DRIVE AXLE ASSY	1					
12	3C1–E7211–00	GEAR, 1ST WHEEL (34T)	1					
13	90387–17804	COLLAR	1					
14	2PV–E7251–00	GEAR, 5TH WHEEL (22T)	1					
15	90209–18208	WASHER	1					
16	93410–22039	CIRCLIP	1					
17	BK6–E7241–00	GEAR, 4TH WHEEL (24T)	1					
18	BK6–E7231–00	GEAR, 3RD WHEEL (30T)	1					
19	3C1–E7285–00	CLUTCH, DOG	1					
20	BK8–E7221–00	GEAR, 2ND WHEEL (30T)	1					
21	90201–20814	WASHER, PLATE	1					
22	90201–173F4	WASHER, PLATE	1					
23	93306–003YN	BEARING	1					
24	93306–204Y7	BEARING	1					
25	93102–20892	OIL SEAL	1					
26	93822–14800	SPROCKET, DRIVE (14T)	1					
27	1S8–E7456–00	HOLDER, SPROCKET	1					

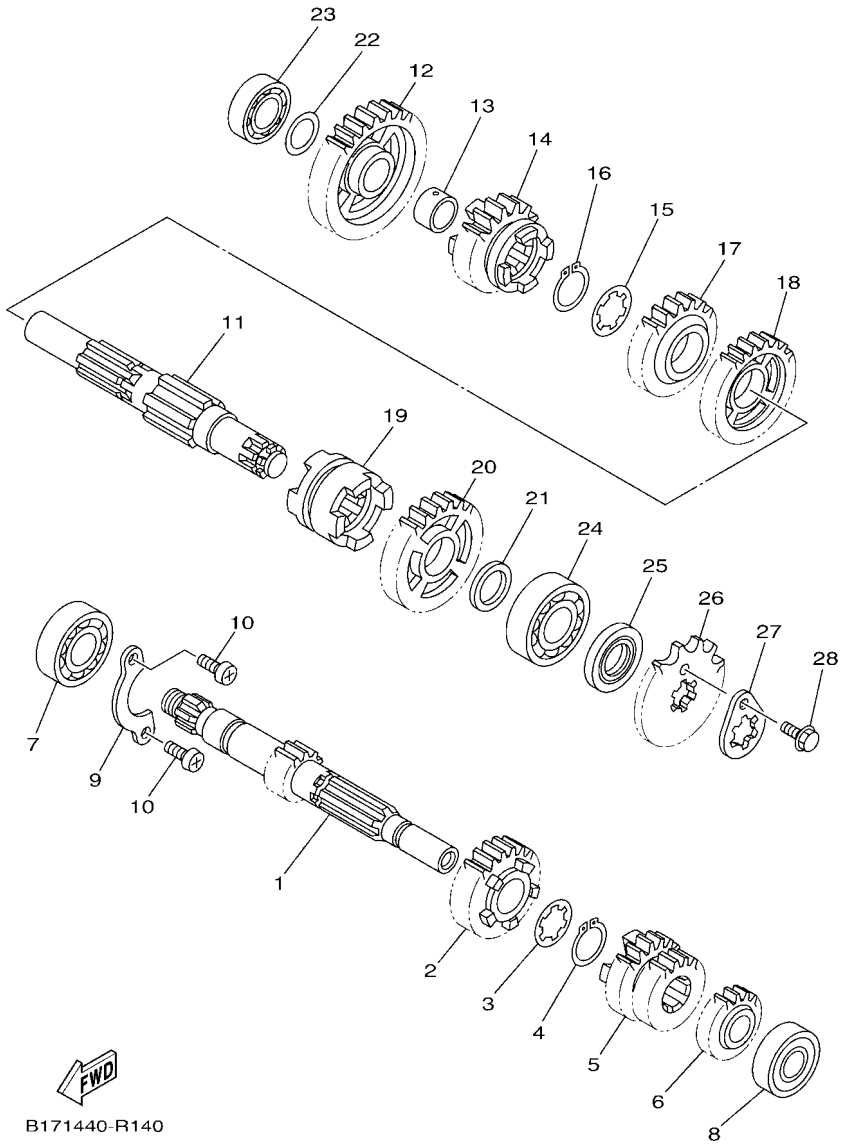

FIG. 14 TRANSMISSION

REF. NO.	PART NO.	DESCRIPTION	B17D					REMARKS
28	95E32–06010	BOLT, FLANGE DEEP RECESS	1					

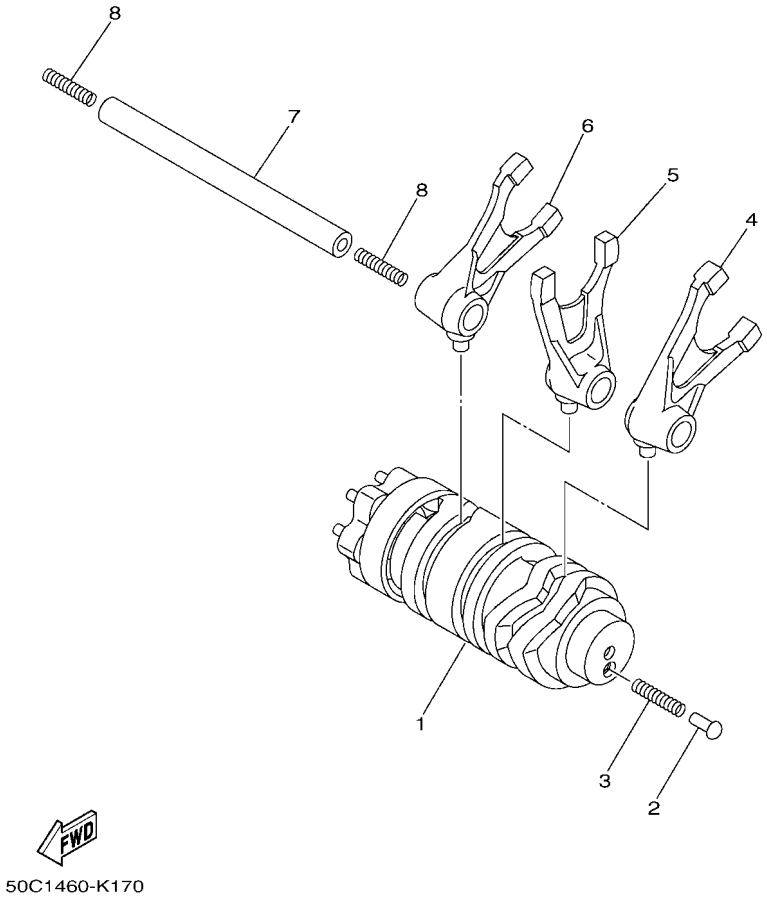

FIG. 15 SHIFT CAM & FORK

REF. NO.	PART NO.	DESCRIPTION	B17D					REMARKS
1	2PV–E8540–10	SHIFT CAM ASSY	1					
2	5TP–E8542–00	POINT, NEUTRAL	1					
3	90501–06022	SPRING, COMPRESSION	1					
4	2ND–E8511–00	FORK, SHIFT 1	1					
5	2ND–E8512–00	FORK, SHIFT 2	1					
6	2ND–E8513–00	FORK, SHIFT 3	1					
7	1PA–E8531–00	BAR, SHIFT FORK GUIDE 1	1					UR
	38B–E8531–00	BAR, SHIFT FORK GUIDE 1	1					UR
8	90501–06800	SPRING, COMPRESSION	2					

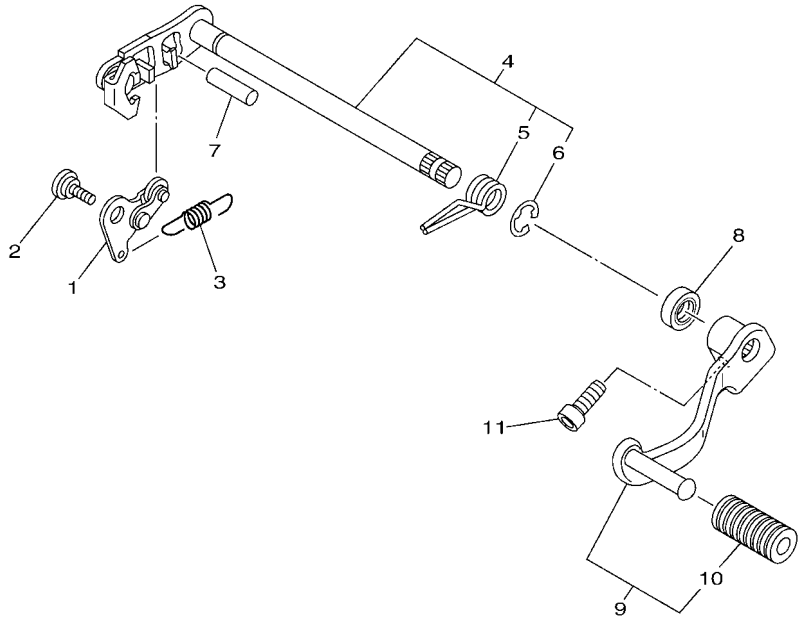

2ND1422-P160

FIG. 16 SHIFT SHAFT

REF. NO.	PART NO.	DESCRIPTION	B17D					REMARKS
1	21C–E8140–00	STOPPER LEVER ASSY	1					
2	90109–06279	BOLT	1					
3	3C1–E8337–00	SPRING	1					
4	2ND–E8101–01	SHIFT SHAFT ASSY	1					
5	90508–32837	.SPRING, TORSION	1					
6	99002–10600	.CIRCLIP	1					
7	93608–30839	PIN, DOWEL	1					
8	93102–12891	OIL SEAL	1					
9	B17–E8110–10	SHIFT PEDAL ASSY	1					
10	5H3–E8113–00	.COVER, SHIFT PEDAL	1					
11	91312–08020	BOLT, HEXAGON SOCKET HEAD	1					

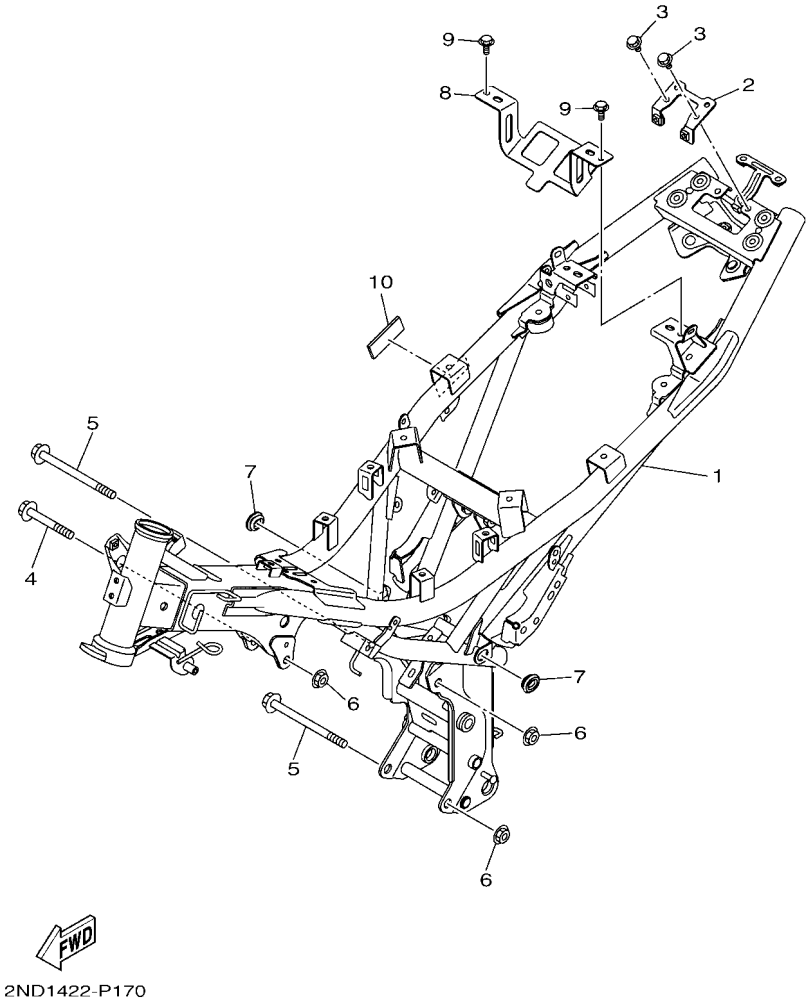

FIG. 17 FRAME

REF. NO.	PART NO.	DESCRIPTION	B17D					REMARKS
1	B17–F1110–10	FRAME COMP.	1					
2	B17–F478X–00	BRACKET, SEAT LOCK	1					
3	95D02–06012	BOLT, FLANGE DEEP RECESS	2					
4	90105–108B5	BOLT, FLANGE	1					
5	90105–108B4	BOLT, FLANGE	2					
6	90179–10805	NUT	3					
7	90480–01559	GROMMET	2					
8	B17–F2535–00	STAY, BATTERY 1	1					
9	95D02–06012	BOLT, FLANGE DEEP RECESS	2					
10	90520–02813	DAMPER, PLATE	1					

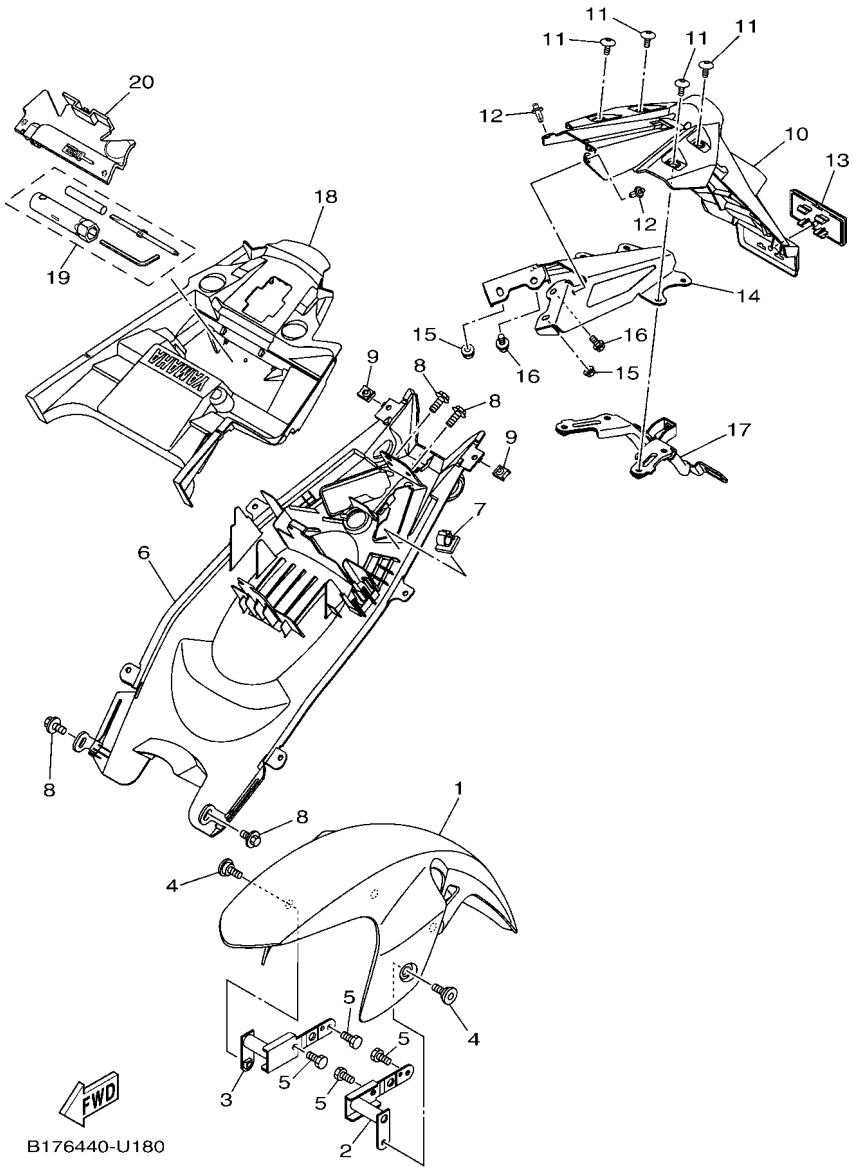

FIG. 18 FENDER

REF. NO.	PART NO.	DESCRIPTION	B17D					REMARKS
1	B17–F1511–10–P0	FENDER, FRONT	1					UR SMX FOR RYC1
	B17–F1511–10–P5	FENDER, FRONT	1					UR FOR MS1
	B17–F1511–10–PD	FENDER, FRONT	1					UR FOR MDNCM1
	B17–F1511–10–PE	FENDER, FRONT	1					UR FOR VOM2
2	B17–F1513–00	STAY, FENDER 1	1					
3	B17–F1514–00	STAY, FENDER 2	1					
4	90109–068A4	BOLT	2					
5	97022–06012	BOLT, HEXAGON	4					
6	B17–F1611–00	FENDER, REAR	1					
7	90464–54086	CLAMP	1					
8	90119–06044	BOLT, WITH WASHER	4					
9	90183–05807	NUT, SPRING	2					
10	B17–F1629–01	GUARD, MUD	1					
11	90111–06848	BOLT, HEXAGON SOCKET BUTTON	4					
12	90269–06816	RIVET	2					
13	55D–H5130–00	REAR REFLECTOR ASSY	1					
14	B17–F164F–00	STAY 1	1					
15	95607–06200	NUT, SELF U-FLANGE	2					
16	95D32–06016	BOLT, FLANGE DEEP RECESS	2					
17	B17–F164G–00	STAY 2	1					
18	B17–F160E–00	BOX	1					
19	B17–F8100–10	TOOL KIT	1					
20	B17–F8170–00	HOLDER, TOOL	1					

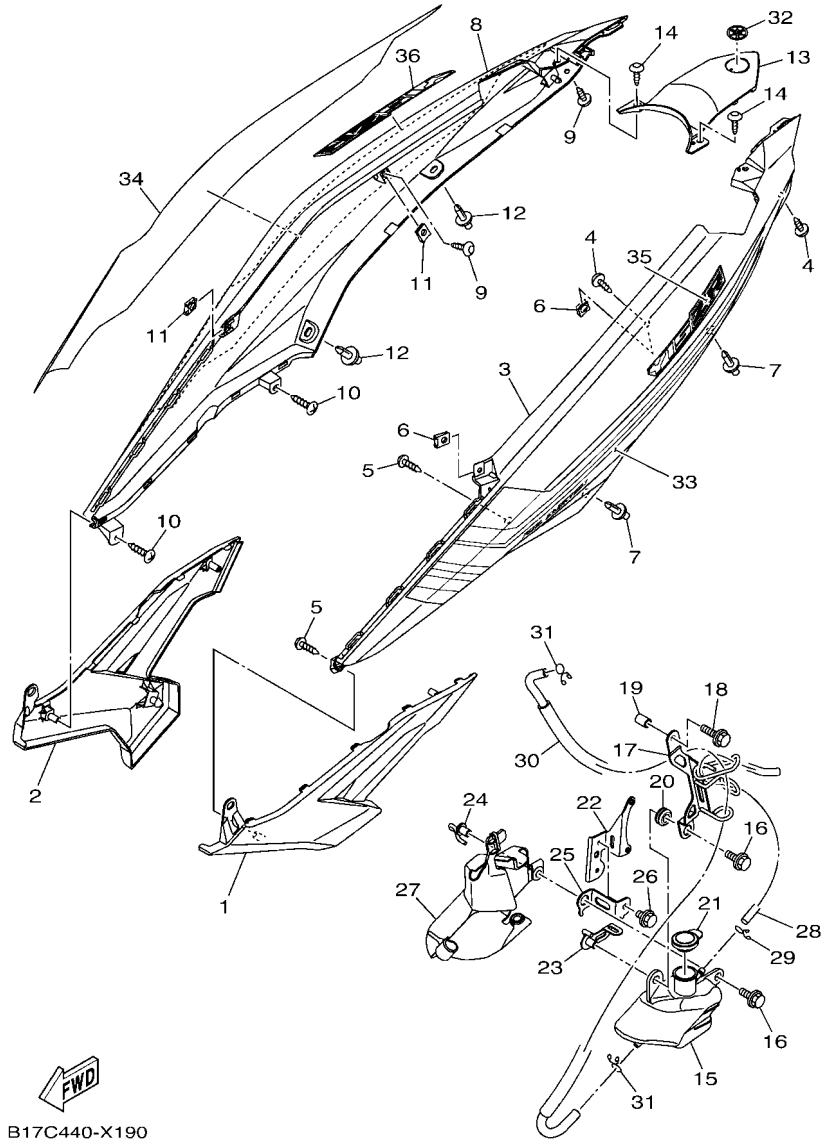

FIG. 19 SIDE COVER

REF. NO.	PART NO.	DESCRIPTION	B17D					REMARKS
1	B17–F1711–10	COVER, SIDE 1	1					
2	B17–F1721–10	COVER, SIDE 2	1					
3	B17–F1731–00–P5	COVER, SIDE 3	1					SMX EXCEPT FOR VOM2
	B17–F1731–00–PC	COVER, SIDE 3	1					MBM3 FOR VOM2
4	90160–05009	SCREW, ROUND TAPPING	2					
5	97702–40014	SCREW, TAPPING	2					
6	90183–05807	NUT, SPRING	2					
7	90269–06816	RIVET	2					
8	B17–F1741–00–P5	COVER, SIDE 4	1					SMX EXCEPT FOR VOM2
	B17–F1741–00–PC	COVER, SIDE 4	1					MBM3 FOR VOM2
9	90160–05009	SCREW, ROUND TAPPING	2					
10	97702–40014	SCREW, TAPPING	2					
11	90183–05807	NUT, SPRING	2					
12	90269–06816	RIVET	2					
13	B17–F171E–00–P5	COVER, SIDE 5	1					SMX EXCEPT FOR VOM2
	B17–F171E–00–PD	COVER, SIDE 5	1					MBM3 FOR VOM2
14	90160–05009	SCREW, ROUND TAPPING	2					
15	1S9–F1871–01	TANK, RECOVERY	1					
16	90119–06044	BOLT, WITH WASHER	2					
17	B17–F172K–00	BRACKET 1	1					
18	95D32–06025	BOLT, FLANGE DEEP RECESS	1					
19	90387–06144	COLLAR	1					
20	90480–13018	GROMMET	1					
21	5YP–F1875–01	CAP	1					
22	B17–F172L–00	BRACKET 2	1					
23	B17–F172M–10	BRACKET 3	1					
24	55P–F1173–00	BOSS, WIRE HOLDER	1					

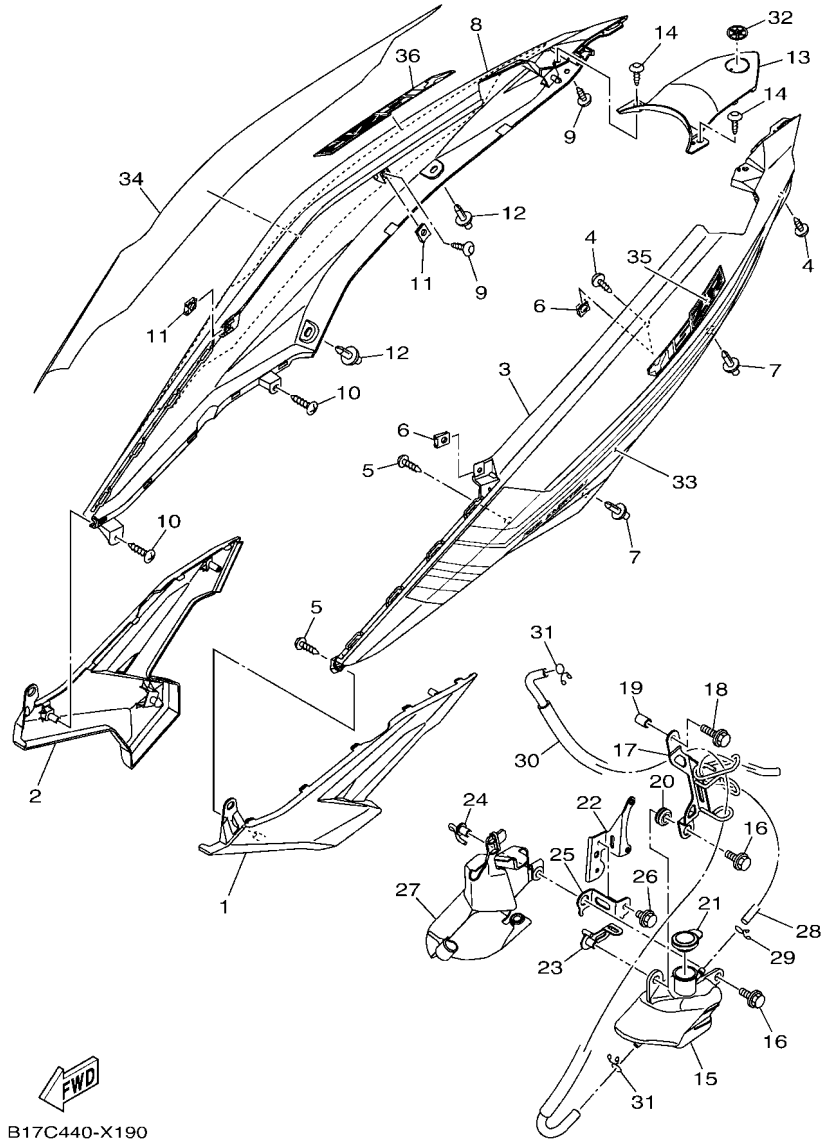

FIG. 19 SIDE COVER

REF. NO.	PART NO.	DESCRIPTION	B17D					REMARKS
25	B17–F172M–00	BRACKET 3	1					
26	95D32–06010	BOLT, FLANGE DEEP RECESS	1					
27	1S8–F172W–00	COVER	1					
28	90445–09823	HOSE	1					
29	90467–08003	CLIP	1					
30	55C–F1817–00	PIPE 2	1					
31	90467–09006	CLIP	2					
32	B17–F836B–30	TUNING FORK MARK	1					
33	B17–F173E–T0	GRAPHIC 1	1					UR FOR RYC1
	B17–F173E–U0	GRAPHIC 1	1					UR FOR MS1
	B17–F173E–V0	GRAPHIC 1	1					UR FOR MDNCM1
	B17–F173E–W0	GRAPHIC 1	1					UR FOR VOM2
34	B17–F173F–T0	GRAPHIC 2	1					UR FOR RYC1
	B17–F173F–U0	GRAPHIC 2	1					UR FOR MS1
	B17–F173F–V0	GRAPHIC 2	1					UR FOR MDNCM1
	B17–F173F–W0	GRAPHIC 2	1					UR FOR VOM2
35	B17–F174G–S0	GRAPHIC 3	1					UR FOR RYC1
	B17–F174G–T0	GRAPHIC 3	1					UR FOR MS1
	B17–F174G–U0	GRAPHIC 3	1					UR FOR MDNCM1
	B17–F174G–V0	GRAPHIC 3	1					UR FOR VOM2
36	B17–F174H–S0	GRAPHIC 4	1					UR FOR RYC1
	B17–F174H–T0	GRAPHIC 4	1					UR FOR MS1
	B17–F174H–U0	GRAPHIC 4	1					UR FOR MDNCM1
	B17–F174H–V0	GRAPHIC 4	1					UR FOR VOM2

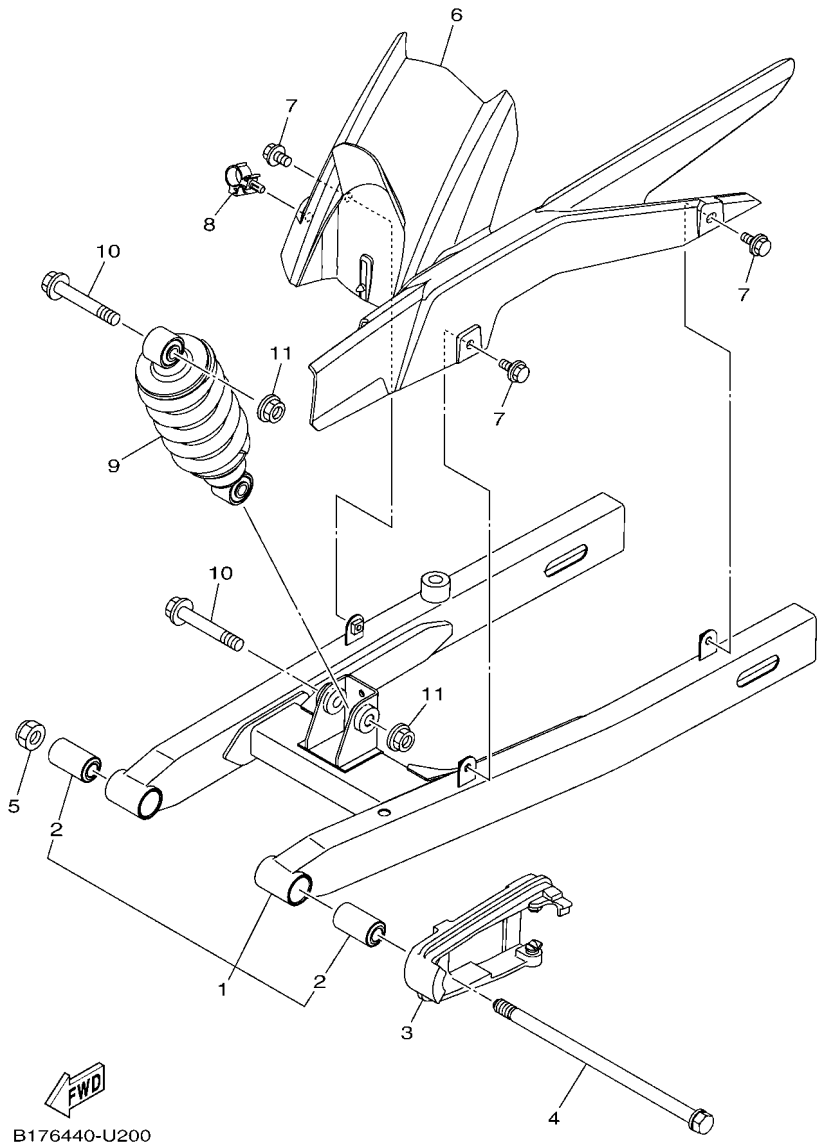

FIG. 20 REAR ARM & SUSPENSION

REF. NO.	PART NO.	DESCRIPTION	B17D					REMARKS
1	BAX–F2100–00	REAR ARM ASSY	1					
2	5B9–F2123–00	.BUSH 1	2					
3	B17–F2151–10	SEAL, GUARD	1					
4	4NP–F5381–00	AXLE, WHEEL	1					
5	95614–12100	NUT, U	1					
6	B17–F1650–00	REAR FENDER COMP.	1					
7	90119–06155	BOLT, WITH WASHER	3					
8	90464–16012	CLAMP	1					
9	B17–F2210–00	SHOCK ABSORBER ASSY, REAR	1					
10	90105–10855	BOLT, FLANGE	2					
11	95602–10200	NUT, SELF-LOCKING	2					

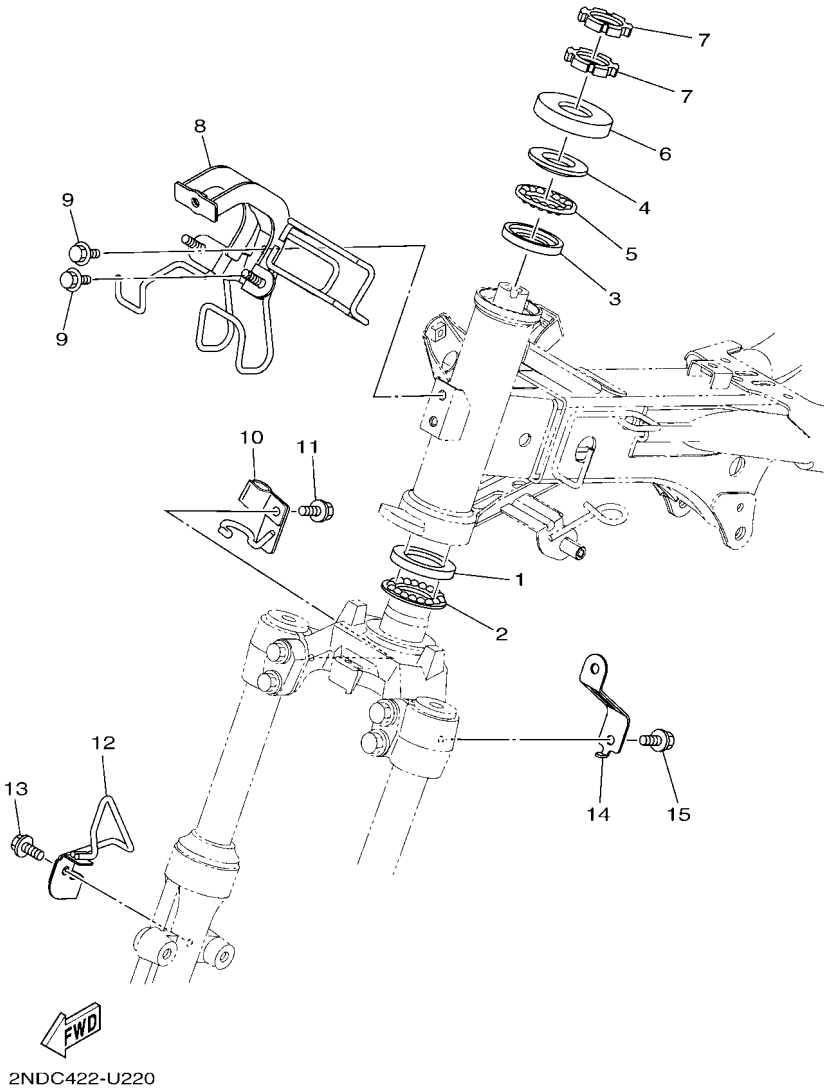

FIG. 21 STEERING

REF. NO.	PART NO.	DESCRIPTION	B17D					REMARKS
1	1KL–F3412–10	RACE, BALL 2	1					
2	5VL–F341E–10	RETAINER, BALL BEARING	1					
3	4RT–F3412–10	RACE, BALL 2	1					
4	4RT–F3411–10	RACE, BALL 1	1					
5	1P6–F341E–10	RETAINER, BALL BEARING	1					
6	5TL–F3416–01	COVER, BALL RACE 2	1					
7	90179–25002	NUT	2					
8	B17–F331A–10	STAY	1					
9	95D02–06012	BOLT, FLANGE DEEP RECESS	2					
10	2PV–F587A–00	HOLDER, BRAKE HOSE 4	1					
11	95D02–06012	BOLT, FLANGE DEEP RECESS	1					
12	B17–F5876–00	HOLDER, BRAKE HOSE 2	1					
13	95D02–06012	BOLT, FLANGE DEEP RECESS	1					
14	B17–F334G–00	BRACKET 1	1					
15	95D02–06012	BOLT, FLANGE DEEP RECESS	1					

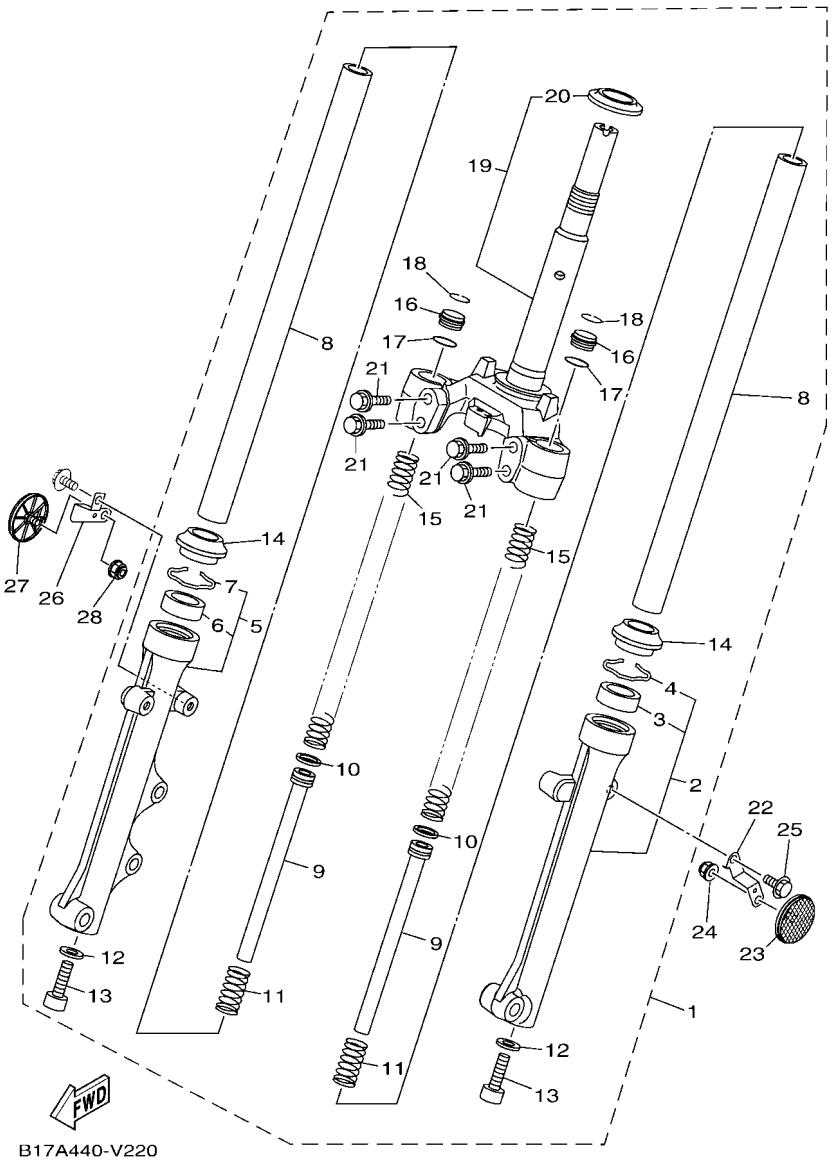

FIG. 22 FRONT FORK

REF. NO.	PART NO.	DESCRIPTION	B17D					REMARKS
1	B17–F3100–10	FRONT FORK ASSY	1					
2	2ND–F3126–00	.TUBE, OUTER (L.H)	1					
3	4UV–F3145–00	..OIL SEAL	1					
4	5P0–F3156–00	..RING, SNAP	1					
5	B17–F3136–00	.TUBE, OUTER 2	1					
6	4UV–F3145–00	..OIL SEAL	1					
7	5P0–F3156–00	..RING, SNAP	1					
8	2PV–F3110–20	.INNER TUBE COMP.1	2					
9	2ND–F3170–10	.CYLINDER COMP., FRONT FORK	2					
10	2ND–F3157–00	.RING, PISTON	2					
11	5TF–F3152–00	.SPRING, SUB	2					
12	509–F3158–L0	.GASKET	2					
13	31D–F3181–50	.BOLT, HEXAGON SOCKET HEAD	2					
14	5LL–F3144–00	.SEAL, DUST	2					
15	2PV–F3141–20	.SPRING, FRONT FORK	2					
16	1FC–F3111–10	.BOLT, CAP	2					
17	2JG–F3147–00	.O-RING	2					
18	5P0–F3153–00	.RING, SNAP	2					
19	B17–F3340–00	.UNDER BRACKET COMP.	1					
20	4FP–F3411–10	..RACE, BALL 1	1					
21	31B–F3346–00	.BOLT 1	4					
22	B17–F113J–00	BRACKET, REFLECTOR 1	1					
23	2FC–H5111–00	REFLECTOR, 1	1					
24	90185–05803	NUT, SELF-LOCKING	1					
25	95D02–06012	BOLT, FLANGE DEEP RECESS	1					
26	B17–F113K–00	BRACKET, REFLECTOR 2	1					
27	2FC–H5111–00	REFLECTOR, 1	1					

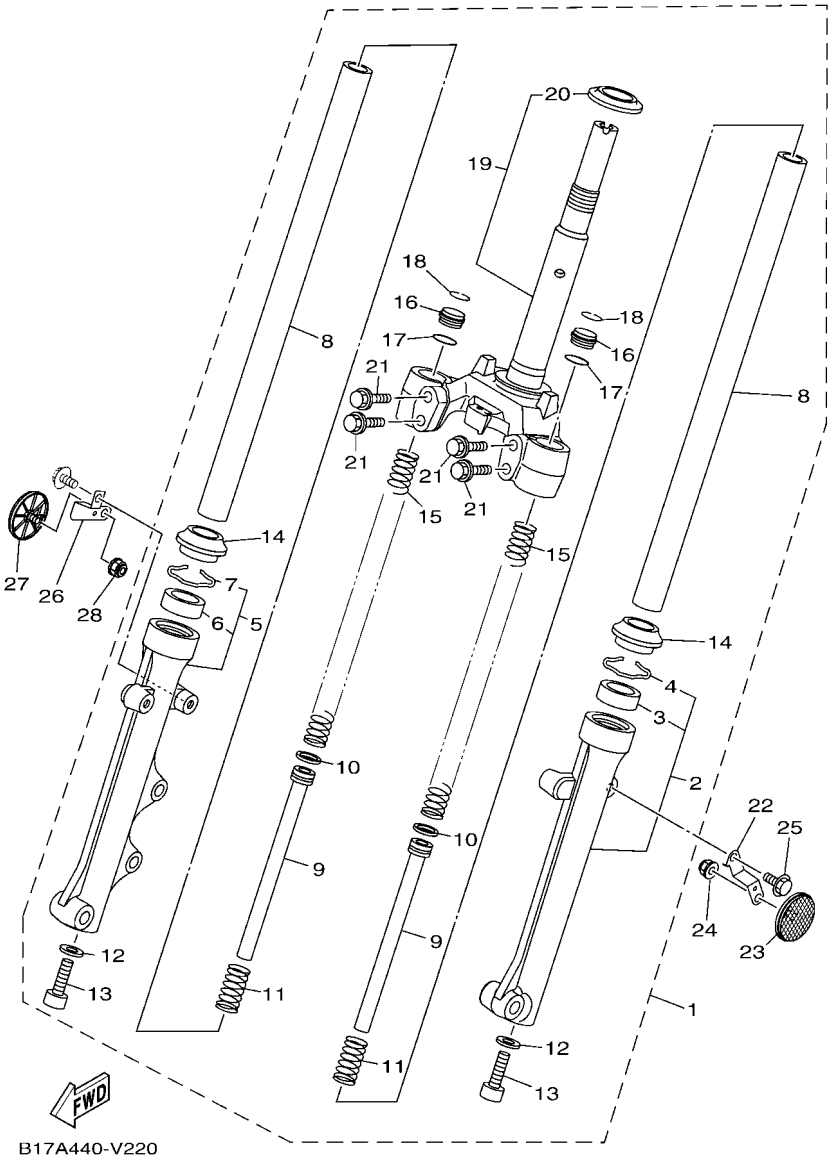

FIG. 22 FRONT FORK

REF. NO.	PART NO.	DESCRIPTION	B17D					REMARKS
28	90185–05803	NUT, SELF-LOCKING	1					

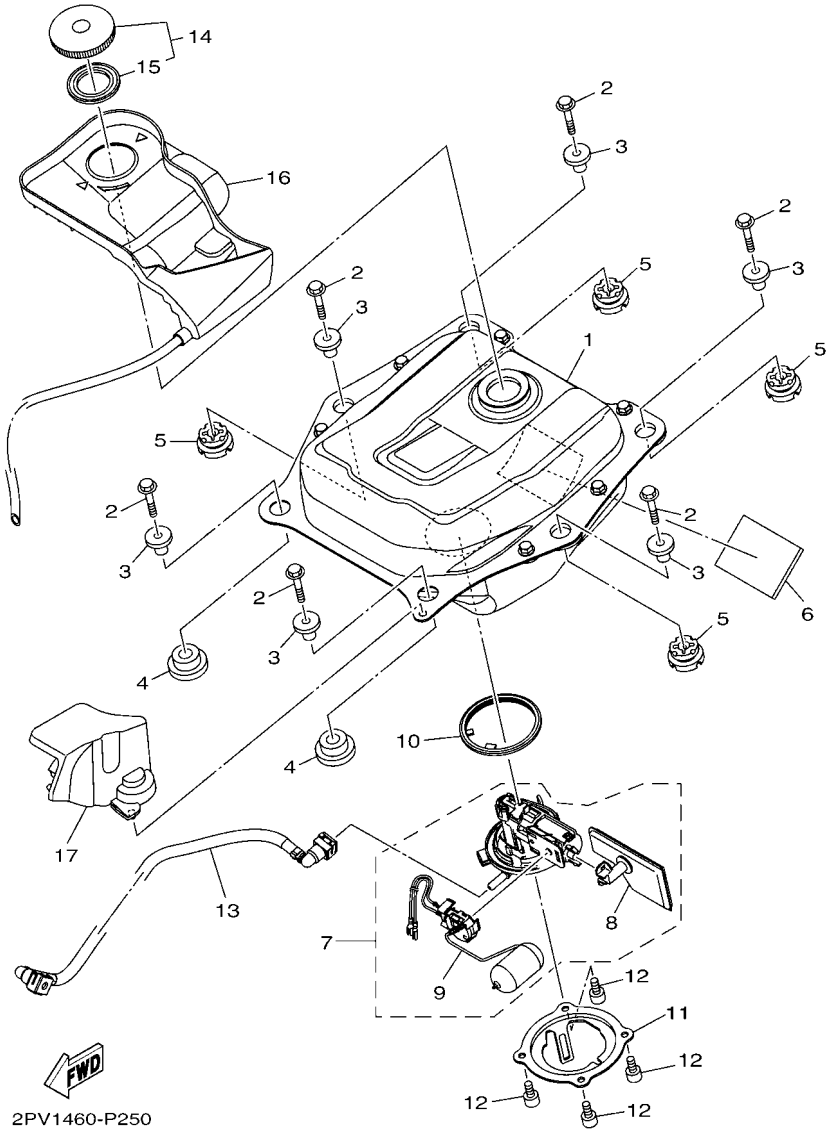

FIG. 23 FUEL TANK

REF. NO.	PART NO.	DESCRIPTION	B17D					REMARKS
1	B17–F4100–01	FUEL TANK ASSY	1					
2	95D02–06030	BOLT, FLANGE DEEP RECESS	6					
3	90387–08835	COLLAR	6					
4	90480–18810	GROMMET	2					
5	90480–18811	GROMMET	4					
6	1S8–F8372–00	DAMPER	1					
7	2ND–E3907–00	FUEL PUMP COMP.	1					
8	54P–E3915–00	.FILTER, FUEL SUCTION	1					
9	2ND–H5752–00	.SENDER	1					
10	1DB–F414G–01	SEAL	1					
11	BAX–F4491–00	BRACKET, FUEL PUMP	1					
12	91332–05010	BOLT	4					
13	2PV–E3971–01	PIPE, FUEL 1	1					
14	4YY–F4610–00	CAP ASSY	1					
15	4YY–F4612–00	.PACKING, CAP	1					
16	B17–F41B1–00	COVER, TANK	1					
17	B17–F4452–00	COVER	1					

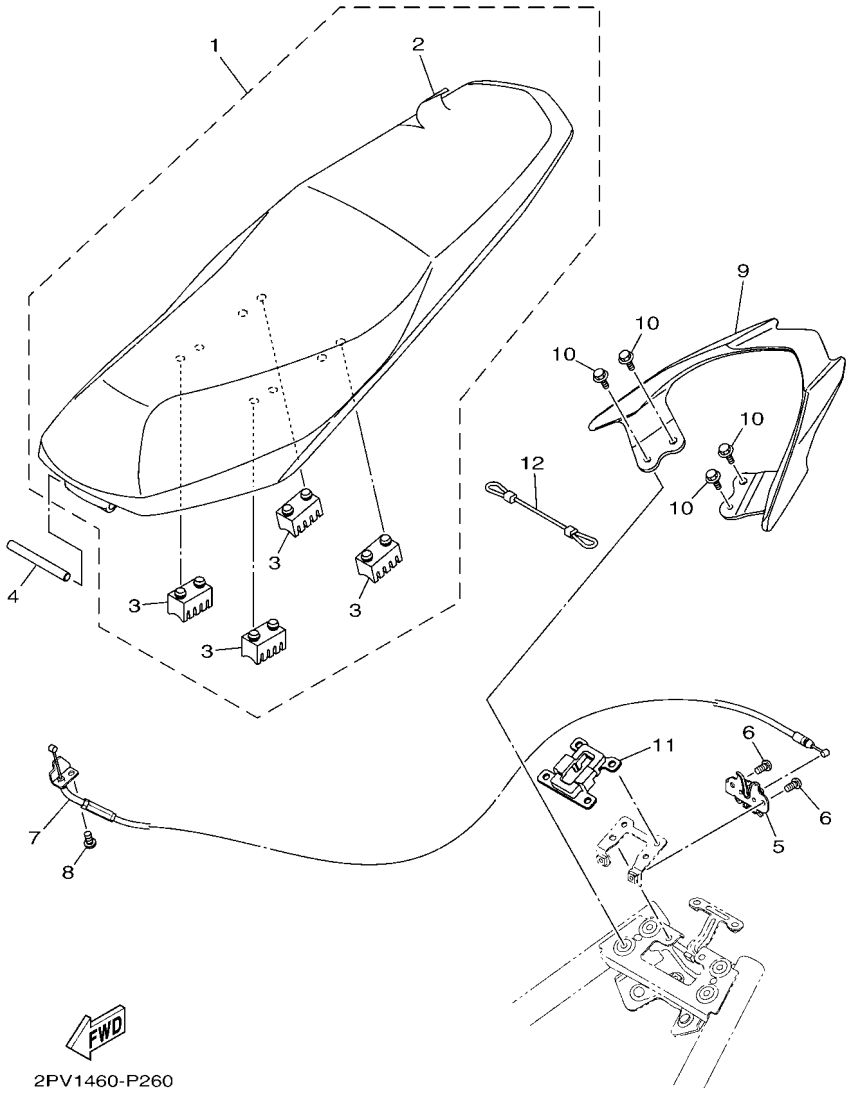

FIG. 24 SEAT

REF. NO.	PART NO.	DESCRIPTION	B17D					REMARKS
1	B17–F4730–00	DOUBLE SEAT ASSY	1					
2	B17–F470F–00	.SEAT COVER COMP.	1					
3	5VT–F4723–00	.DAMPER, SEAT	4					
4	2WB–F4727–00	PIN, SEAT FITTING	1					
5	1DY–F4780–00	SEAT LOCK ASSY	1					
6	98502–06012	SCREW, PAN HEAD	2					
7	B17–F478E–00	CABLE, SEAT LOCK	1					
8	98502–05010	SCREW, PAN HEAD	1					
9	B17–F4773–00–P5	HANDLE, SEAT	1					SMX EXCEPT FOR MS1
	B17–F4773–00–PA	HANDLE, SEAT	1					FOR MS1
10	95D32–06020	BOLT, FLANGE DEEP RECESS	4					
11	B17–F1978–00	PROTECTOR, FRAME	1					
12	2PV–F1398–10	HANGER, HELMET	1					

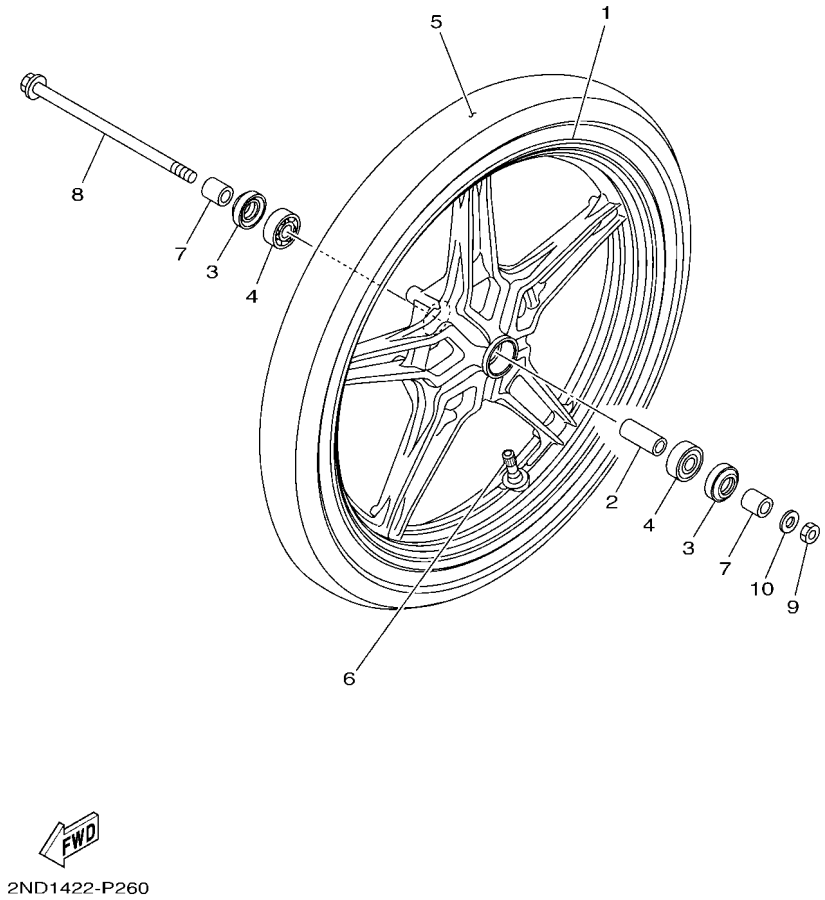

FIG. 25 FRONT WHEEL

REF. NO.	PART NO.	DESCRIPTION	B17D					REMARKS
1	B17–F5168–10–33	CAST WHEEL, FRONT	1					YB EXCEPT FOR MDNCM1
	B17–F5168–10–8L	CAST WHEEL, FRONT	1					NG FOR MDNCM1
2	90560–10292	SPACER	1					
3	93106–20816	OIL SEAL	2					
4	93306–300YN	BEARING	2					
5	94109–17805	TIRE (90/80-17 M/C 46P D102FA)	1					UR DUNLOP
	94109–17809	TIRE(90/80-17 M/C 46P DM1060F)	1					UR DURO
6	93900–00817	VALVE, RIM (TR412)	1					
7	90387–10277	COLLAR	2					
8	3NA–F5181–01	AXLE, WHEEL	1					
9	90185–10091	NUT, SELF-LOCKING	1					
10	90201–101J1	WASHER, PLATE	1					

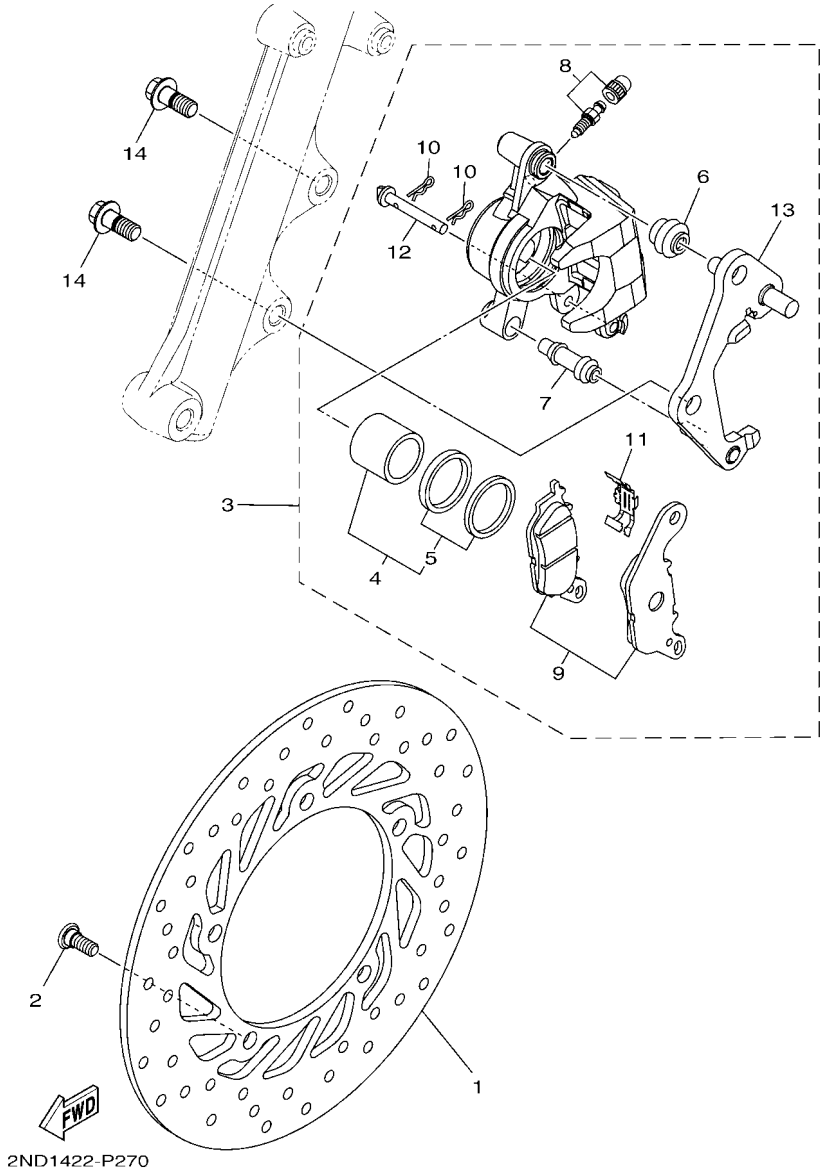

FIG. 26 FRONT BRAKE CALIPER

REF. NO.	PART NO.	DESCRIPTION	B17D					REMARKS
1	2ND–F582U–11	DISK, BRAKE (RIGHT)	1					UR
	B17–F582U–00	DISK, BRAKE (RIGHT)	1					UR
2	90109–08087	BOLT	5					
3	2ND–F580U–01	CALIPER ASSY (RIGHT)	1					
4	2BM–F5802–00	.PISTON ASSY, CALIPER	1					
5	5YP–F5803–50	..CALIPER SEAL KIT	1					
6	2BM–F5917–00	.BOOT, CALIPER	1					
7	5YP–F5937–00	.BOOT 2	1					
8	4C9–W0048–00	.BLEED SCREW KIT	1					
9	2DP–F5805–00	.BRAKE PAD KIT	1					
10	5YP–F5925–01	.CLIP	2					
11	2BM–F5919–00	.SUPPORT, PAD	1					
12	5YP–F5924–00	.PIN, PAD	1					
13	2ND–F5920–00	.SUPT. BRKT. ASSY.	1					
14	90105–10831	BOLT, FLANGE	2					

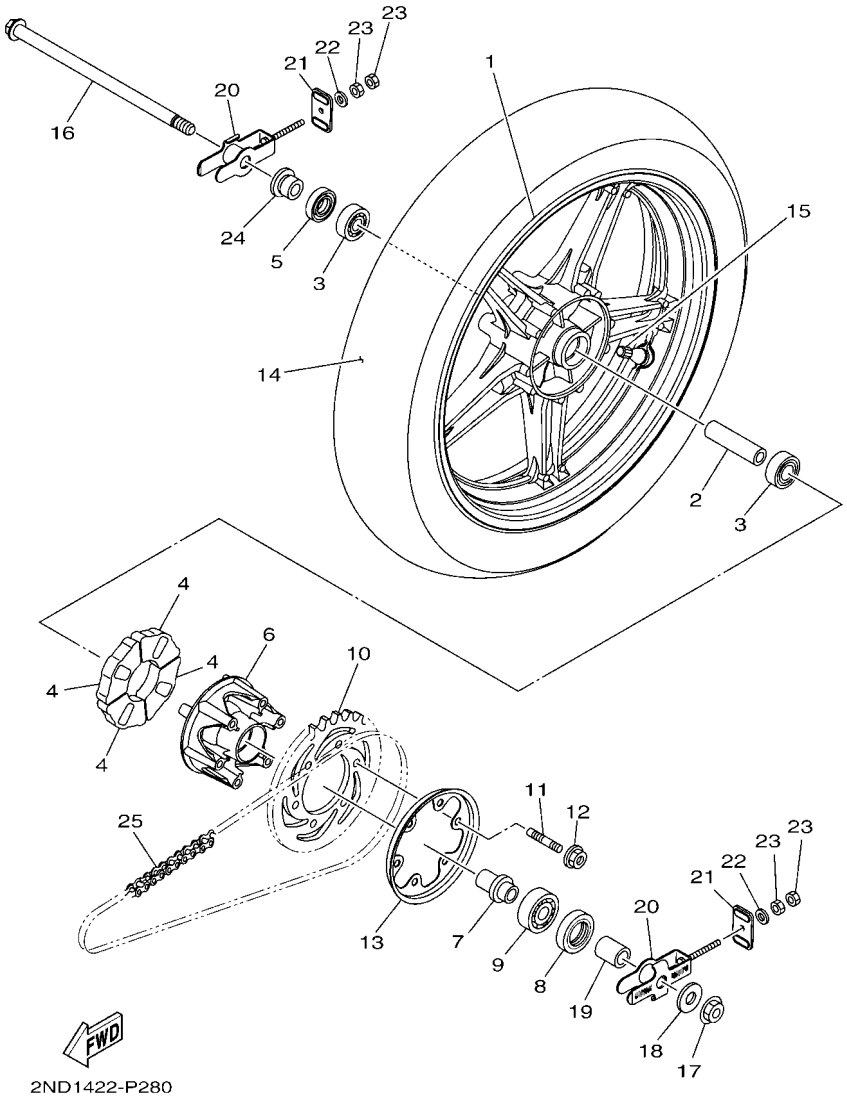

FIG. 27 REAR WHEEL

REF. NO.	PART NO.	DESCRIPTION	B17D					REMARKS
1	B17–F5338–10–33	CAST WHEEL, REAR	1					YB EXCEPT FOR MDNCM1
	B17–F5338–10–8L	CAST WHEEL, REAR	1					NG FOR MDNCM1
2	B17–F5317–00	SPACER, BEARING	1					
3	93306–252X7	BEARING	2					
4	B17–F5364–00	DAMPER	4					
5	93106–22808	OIL SEAL	1					
6	B17–F5366–00	CLUTCH, HUB	1					
7	B17–F5377–00	COLLAR, WHEEL	1					
8	93106–26815	OIL SEAL	1					
9	93306–004XV	BEARING	1					
10	B17–F5442–00	SPROCKET, DRIVEN (42T)	1					
11	90116–08826	BOLT, STUD	6					
12	95602–08200	NUT, U FLANGE	6					
13	B17–F5689–00	PLATE, GUIDE	1					
14	94112–17809	TIRE (120/70-70 M/C 58P)	1					UR DURO
	94112–17804	TIRE (120/70-17 M/C 58P D102A)	1					UR DUNLOP
15	93900–00817	VALVE, RIM (TR412)	1					
16	5BP–F5381–00	AXLE, WHEEL	1					
17	95602–14200	NUT, SELF-LOCKING	1					
18	90201–15030	WASHER, PLATE	1					
19	90387–15830	COLLAR	1					
20	B17–F5388–01	PULLER, CHAIN 1	2					UR
	2ND–F5388–00	PULLER, CHAIN 1	2					UR
21	B17–F2174–00	END 1	2					
22	92902–06600	WASHER, PLATE	2					
23	95302–06600	NUT, HEXAGON	4					
24	B17–F5383–00	COLLAR, WHEEL	1					UR

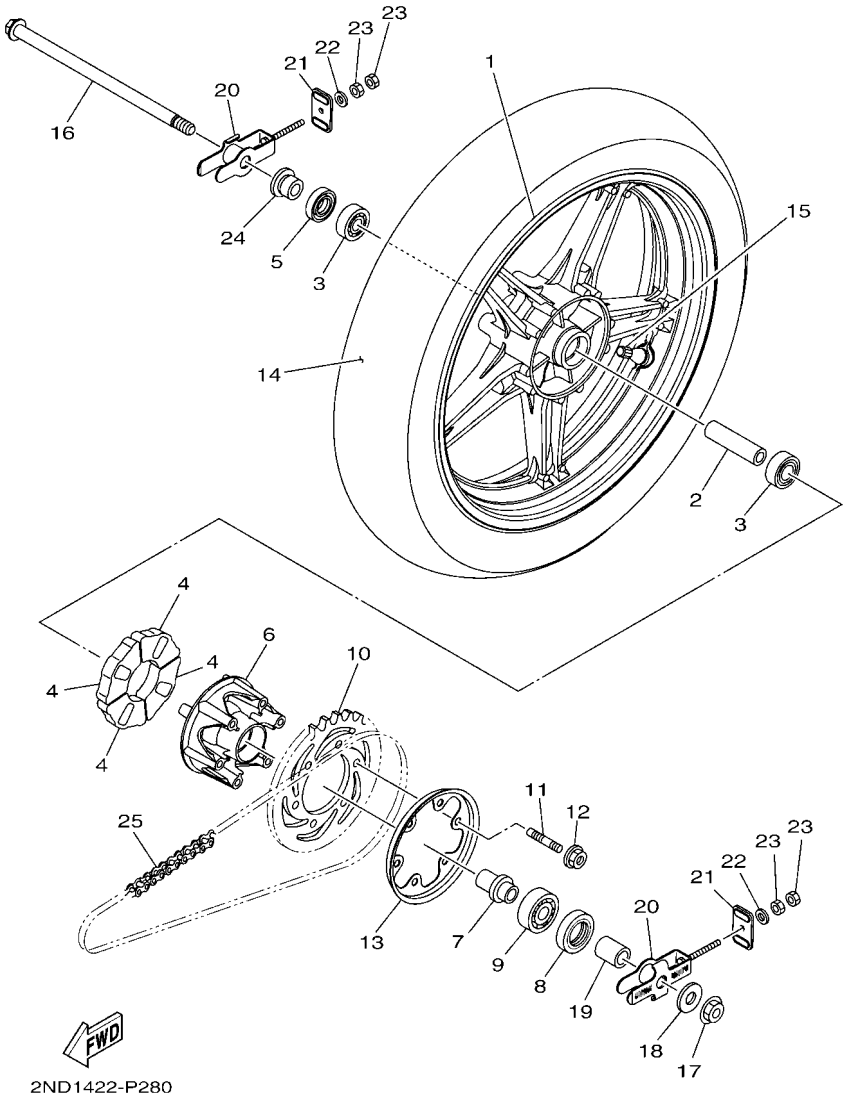

FIG. 27 REAR WHEEL

REF. NO.	PART NO.	DESCRIPTION	B17D					REMARKS
24	1CK–F5383–00	COLLAR, WHEEL	1					UR
25	94568–D6122	CHAIN (RK 428KPO X 122LE)	1					

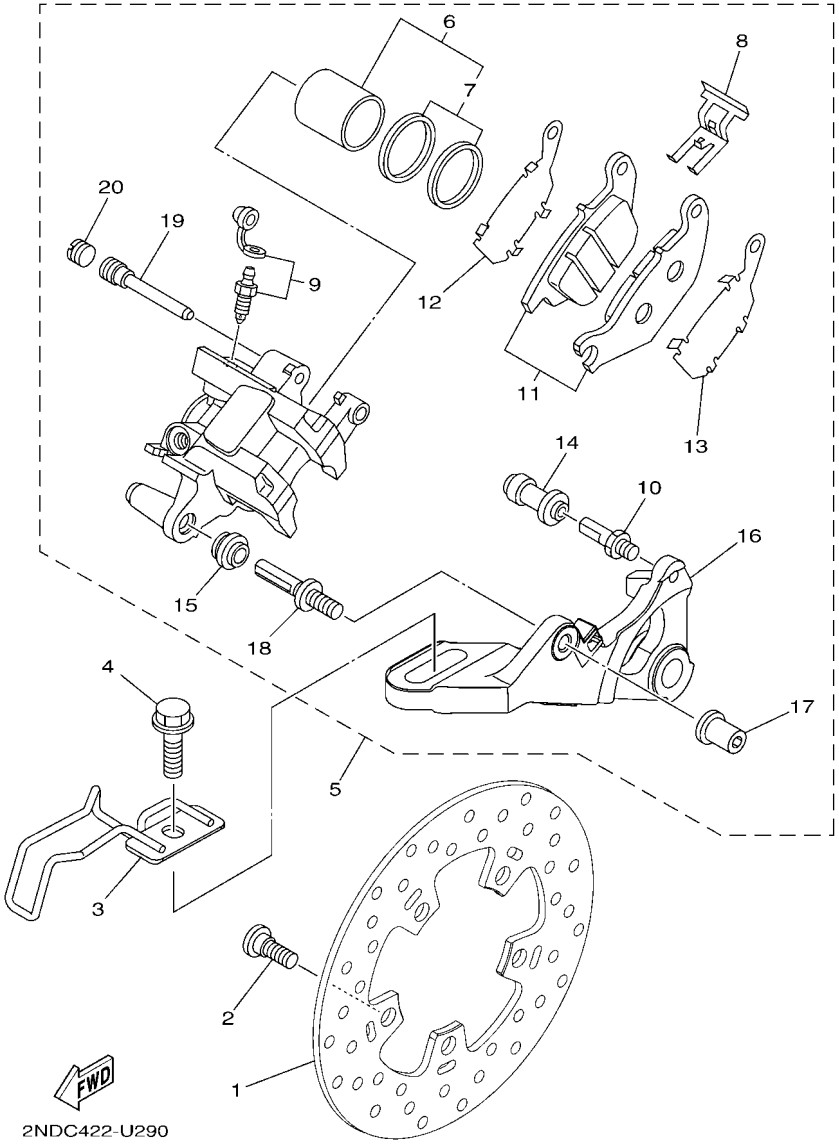

FIG. 28 REAR BRAKE CALIPER

REF. NO.	PART NO.	DESCRIPTION	B17D					REMARKS
1	2PV–F582W–00	DISK, REAR BRAKE 2	1					UR
	B17–F582W–00	DISK, REAR BRAKE 2	1					UR
2	90109–08087	BOLT	5					
3	B17–F2167–10	GUIDE	1					
4	95D32–10035	BOLT, FLANGE DEEP RECESS	1					
5	1PA–F580W–01	CALIPER ASSY, REAR 2	1					
6	50C–F5802–00	.PISTON ASSY, CALIPER	1					
7	3GD–25803–00	..CALIPER SEAL KIT	1					
8	50C–F5919–00	.SUPPORT, PAD	1					
9	50C–W0048–00	.BLEED SCREW KIT	1					
10	50C–F5914–00	.PIN, SLIDE	1					
11	1PA–F5806–00	.BRAKE PAD KIT 2	1					
12	50C–F5827–00	.SHIM, CALIPER	1					
13	50C–F5828–00	.SHIM, CALIPER	1					
14	50C–F5937–00	.BOOT 2	1					
15	50C–F5917–00	.BOOT, CALIPER	1					
16	1PA–F5921–01	.BRACKET, SUPPORT	1					
17	50C–F5961–00	.NUT	1					
18	50C–2536G–00	.PIN	1					
19	50C–F5933–00	.PIN HANGER	1					
20	50C–F5916–00	.PLUG	1					

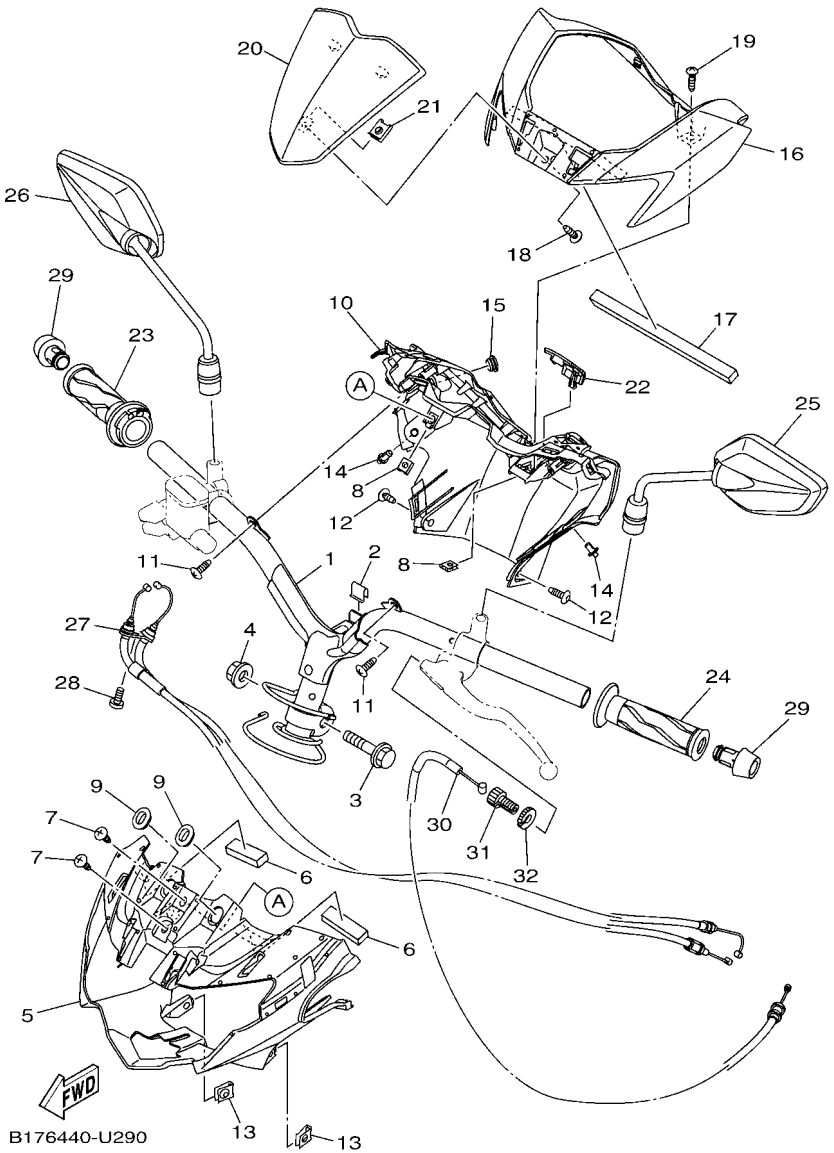

FIG. 29 STEERING HANDLE & CABLE

REF. NO.	PART NO.	DESCRIPTION	B17D					REMARKS
1	B17–F6110–10	HANDLE COMP.	1					
2	2ND–F414G–00	SEAL	1					
3	90105–10896	BOLT, FLANGE	1					
4	90185–10011	NUT, SELF-LOCKING	1					
5	B17–F6143–10	COVER, HANDLE UPPER 1	1					
6	90520–10834	DAMPER, PLATE	2					
7	97702–50016	SCREW,TAPPING	2					
8	90183–05807	NUT, SPRING	2					
9	90480–01559	GROMMET	2					
10	B17–F6145–10	COVER, HANDLE UPPER 2	1					
11	97702–50016	SCREW,TAPPING	2					
12	90160–05009	SCREW, ROUND TAPPING	2					
13	90183–05807	NUT, SPRING	2					
14	90269–06816	RIVET	2					
15	4US–F6199–00	PLUG, BLIND	1					
16	B17–F6216–10–P0	CAP, HANDLEBAR COVER	1					SMX FOR RYC1,MDNCM1
	B17–F6216–10–P6	CAP, HANDLEBAR COVER	1					FOR MS1
	B17–F6216–10–P7	CAP, HANDLEBAR COVER	1					MBM3 FOR VOM2
17	90520–08802	DAMPER, PLATE	1					
18	97707–50012	SCREW, TRUSS HEAD TAPPING	1					
19	97702–50016	SCREW,TAPPING	1					
20	B17–F61AA–00–PA	VISOR	1					UR FOR RYC1
	B17–F61AA–00–P1	VISOR	1					UR SMX FOR MS1
	B17–F61AA–00–P8	VISOR	1					UR FOR MDNCM1
	B17–F61AA–00–P9	VISOR	1					UR FOR VOM2
21	90183–05807	NUT, SPRING	1					
22	B17–F6477–00	COVER	1					

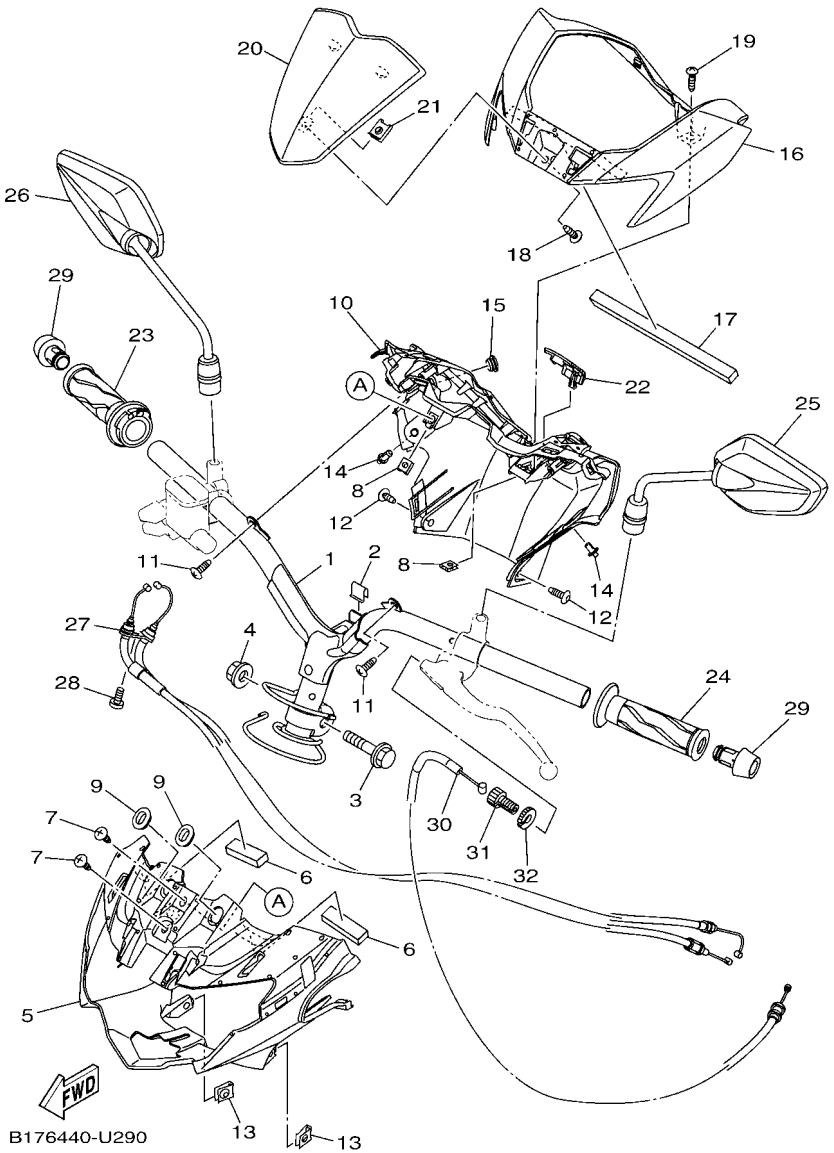

FIG. 29 STEERING HANDLE & CABLE

REF. NO.	PART NO.	DESCRIPTION	B17D					REMARKS
23	B17–F6240–02	GRIP ASSY	1					
24	1VP–F6241–00	GRIP	1					
25	B17–F6280–10	REAR VIEW MIRROR ASSY (LEFT)	1					
26	B17–F6290–10	REAR VIEW MIRROR ASSY (RIGHT)	1					
27	B17–F6301–10	THROTTLE CABLE ASSY	1					
28	92012–05012	BOLT, BUTTON HEAD	1					
29	1VB–F6246–00	END, GRIP	2					
30	B17–F6335–00	WIRE, CLUTCH	1					
31	90123–08046	BOLT	1					
32	90170–08401	NUT	1					

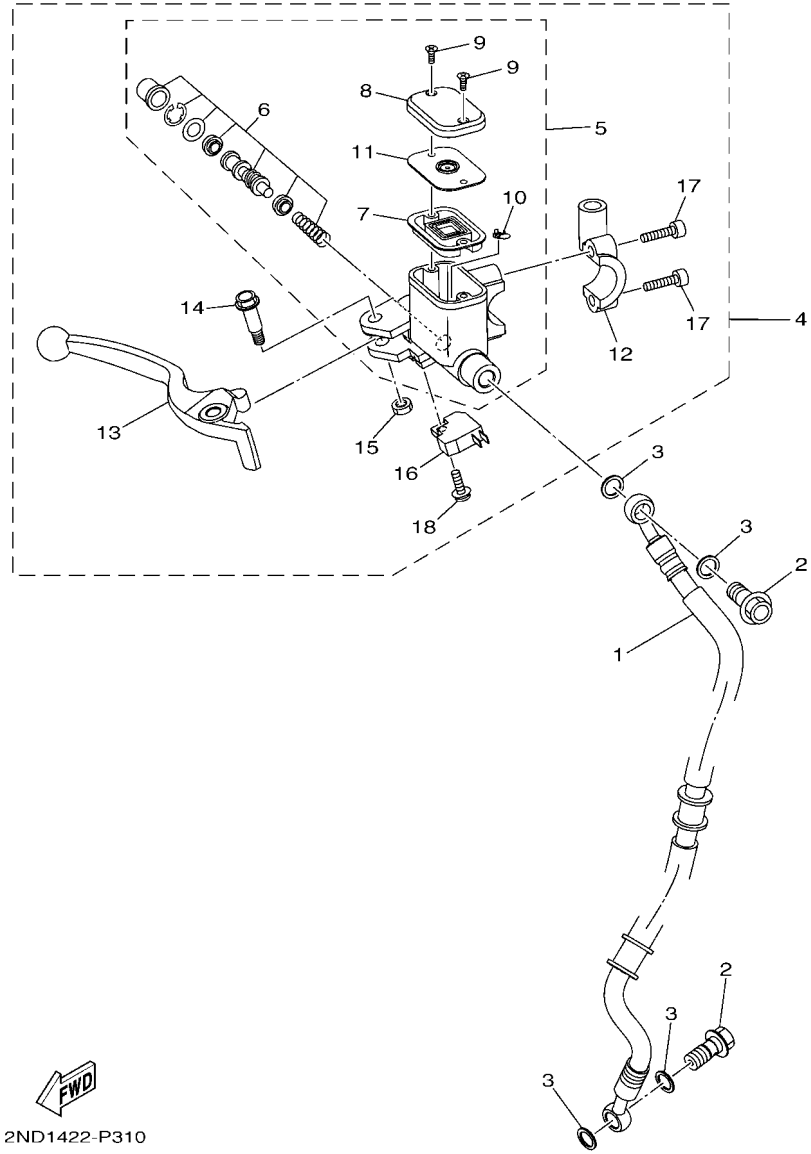

FIG. 30 FRONT MASTER CYLINDER

REF. NO.	PART NO.	DESCRIPTION	B17D					REMARKS
1	2PV–F5872–02	HOSE, BRAKE 1	1					
2	90401–10812	BOLT, UNION	2					
3	90201–10118	WASHER, PLATE	4					
4	2PV–F583T–12	MASTER CYLINDER ASSY	1					
5	2ND–F5870–00	.MASTER CYLINDER SUB ASSY	1					
6	5P0–F580A–00	..CYLINDER KIT, MASTER	1					
7	2ND–F5854–00	..DIAPHRAGM, RESERVOIR	1					
8	2ND–F5852–00	..CAP, RESERVOIR	1					
9	36Y–2589H–00	..SCREW	2					
10	3RW–F5889–00	..SEPARATOR	1					
11	2ND–F5855–00	..BUSH,DIAPHRAGM	1					
12	5TL–F5867–11	.BRACKET,MASTER CYLINDER(BLACK)	1					
13	2ND–H3922–00	.LEVER 2	1					
14	90109–06577	.BOLT	1					
15	95602–06100	.NUT, SELF-LOCKING	1					
16	2DP–H3980–01	.FRONT STOP SWITCH ASSY	1					
17	91312–06025	.BOLT, HEXAGON SOCKET HEAD	2					
18	97602–04312	.SCREW, PAN HEAD WITH WASHER	1					

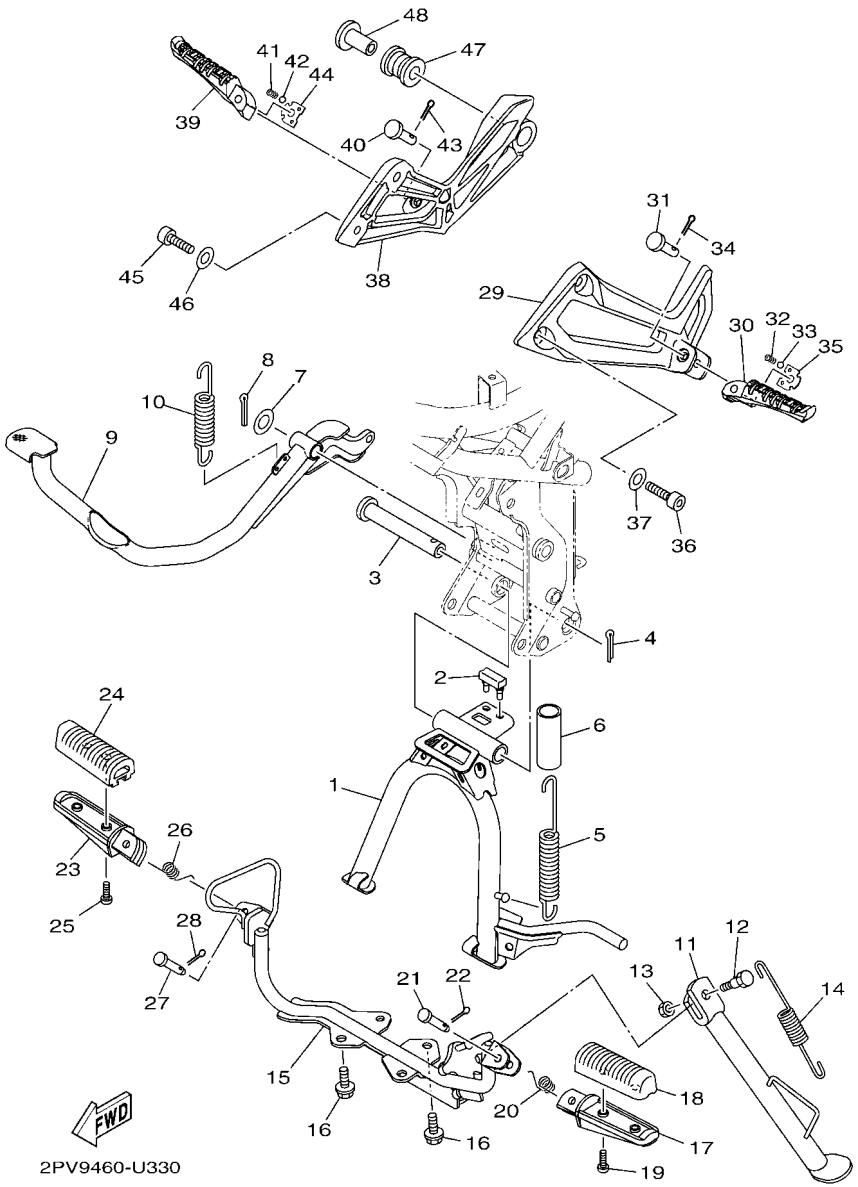

FIG. 31 STAND & FOOTREST

REF. NO.	PART NO.	DESCRIPTION	B17D					REMARKS
1	B17–F7111–10	STAND, MAIN	1					
2	31D–F7114–00	STOPPER, MAIN STAND	1					
3	5YP–F7112–00	SHAFT, MAIN STAND	1					
4	91401–30030	PIN, COTTER	1					
5	90506–35806	SPRING, TENSION	1					
6	90445–22800	HOSE	1					
7	90201–14811	WASHER, PLATE	1					
8	91401–30030	PIN, COTTER	1					
9	B17–F7211–10	PEDAL, BRAKE	1					
10	90506–20041	SPRING, TENSION	1					
11	B17–F7311–10	STAND, SIDE	1					
12	90109–08034	BOLT	1					
13	95307–08700	NUT	1					
14	90506–23809	SPRING, TENSION	1					
15	B17–F7411–00	FOOTREST 1	1					
16	95D37–08016	BOLT, FLANGE DEEP RECESS	4					
17	B17–F7451–00	FOOTREST 3	1					
18	B17–F7413–00	COVER, FOOTREST	1					
19	98502–05014	SCREW, PAN HEAD	2					
20	90508–183B9	SPRING, TORSION	1					
21	91701–08035	PIN	1					
22	91401–25015	PIN, COTTER	1					
23	B17–F7461–00	FOOTREST 4	1					
24	B17–F7413–00	COVER, FOOTREST	1					
25	98502–05014	SCREW, PAN HEAD	2					
26	90508–183B9	SPRING, TORSION	1					
27	91701–08035	PIN	1					

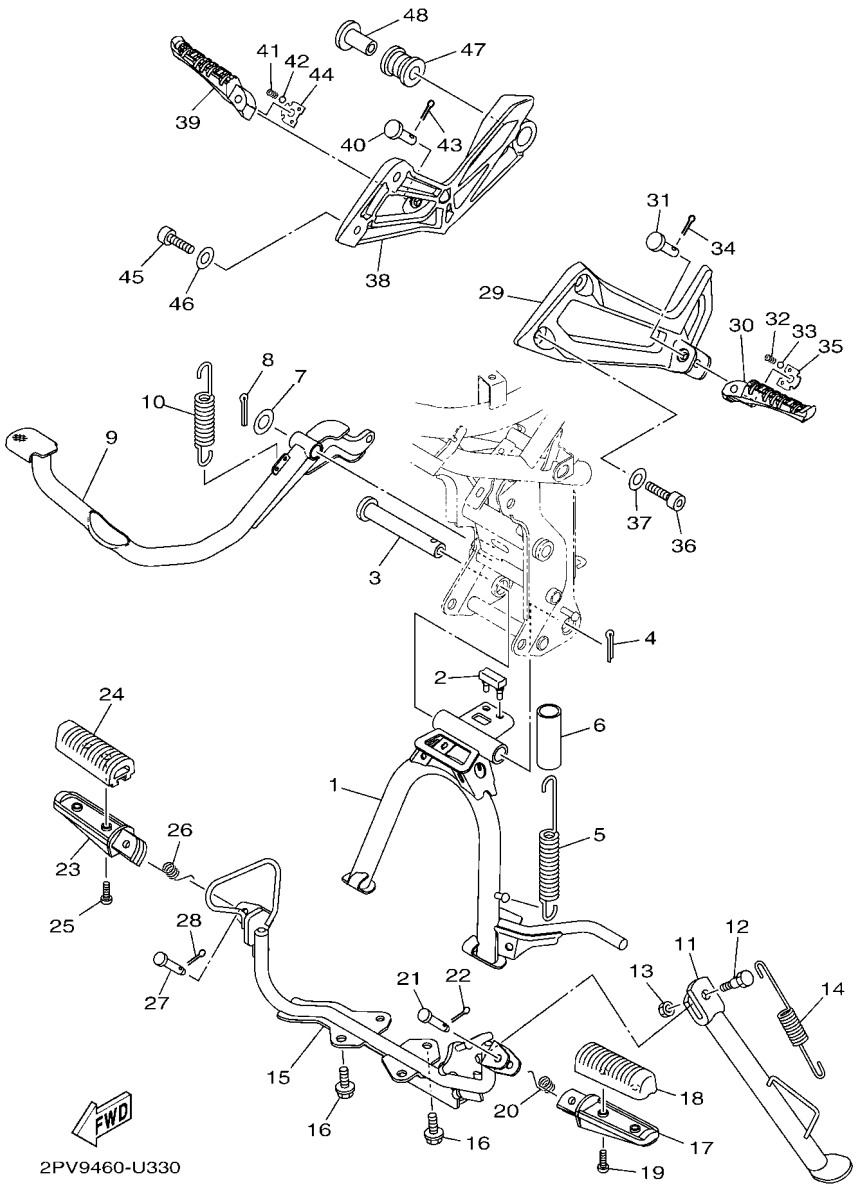

FIG. 31 STAND & FOOTREST

REF. NO.	PART NO.	DESCRIPTION	B17D					REMARKS
28	91401–25015	PIN, COTTER	1					
29	B17–F7452–00–P0	BRACKET, FOOTREST 1	1					MBL2
30	3C1–F7431–01	FOOTREST, REAR 1	1					
31	91702–08042	PIN, CLEVIS	1					
32	90501–12743	SPRING, COMPRESSION	1					
33	93501–04823	BALL	1					
34	91401–25015	PIN, COTTER	1					
35	B17–F7437–00	WASHER, SPECIAL	1					
36	91312–08025	BOLT, HEXAGON SOCKET HEAD	2					
37	90201–086P8	WASHER, PLATE	2					
38	B17–F7462–00–P0	BRACKET, FOOTREST 2	1					MBL2
39	3C1–F7441–01	FOOTREST, REAR 2	1					
40	91702–08042	PIN, CLEVIS	1					
41	90501–12743	SPRING, COMPRESSION	1					
42	93501–04823	BALL	1					
43	91401–25015	PIN, COTTER	1					
44	B17–F7437–00	WASHER, SPECIAL	1					
45	91312–08025	BOLT, HEXAGON SOCKET HEAD	2					
46	90201–086P8	WASHER, PLATE	2					
47	B17–E4747–00	DAMPER, MUFFLER	1					
48	90387–08812	COLLAR	1					

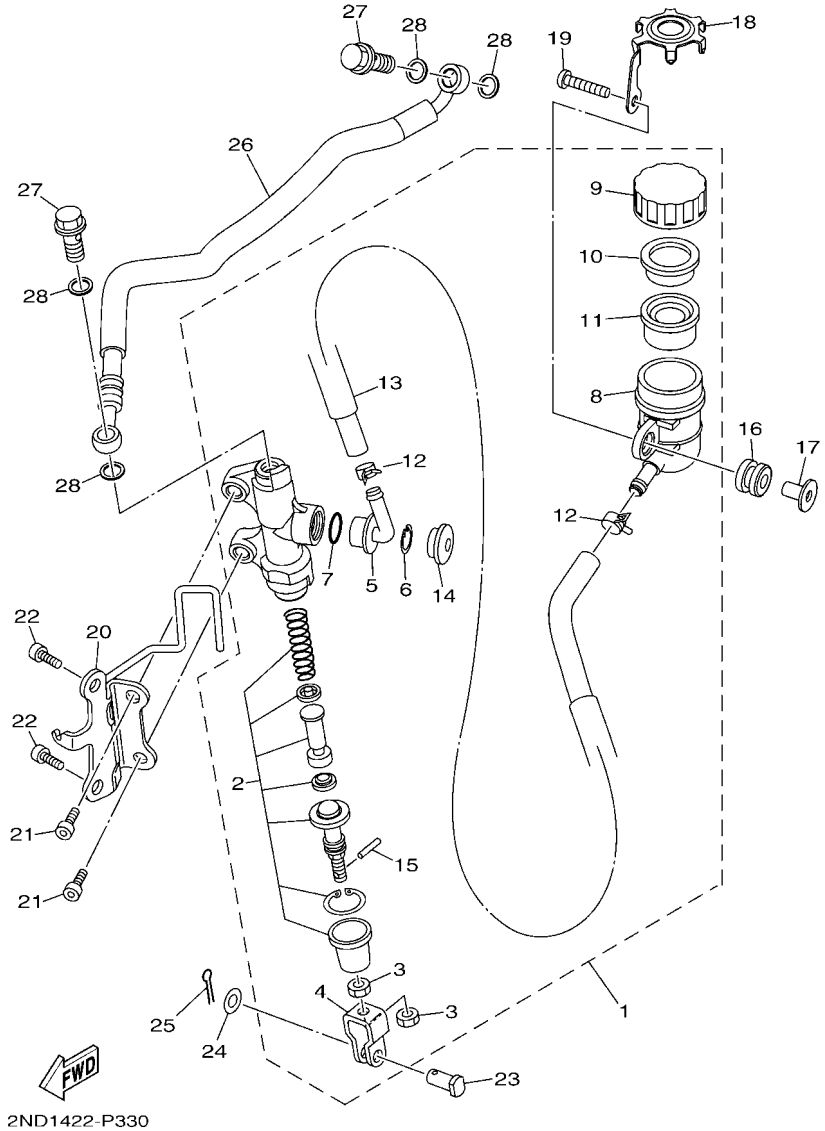

FIG. 32 REAR MASTER CYLINDER

REF. NO.	PART NO.	DESCRIPTION	B17D					REMARKS
1	2ND–F580E–00	REAR MASTER CYLINDER ASSY	1					
2	2ND–F5808–00	.CYLINDER KIT, MASTER	1					
3	95301–08700	.NUT	2					
4	50C–F7222–00	.JOINT	1					
5	50C–F582A–50	.JOINT	1					
6	50C–F5866–00	.CIRCLIP	1					
7	93210–15620	.O-RING	1					
8	50C–F5894–11	.TANK, RESERVOIR	1					
9	50C–F5852–00	.CAP, RESERVOIR	1					
10	50C–F5855–00	.BUSH,DIAPHRAGM	1					
11	2VN–F5854–00	.DIAPHRAGM, RESERVOIR	1					
12	90467–12085	.CLIP	2					
13	4S3–F5895–00	.HOSE, RESERVOIR	1					
14	50C–F589A–00	.COVER, DUST	1					
15	5BU–27234–00	.PIN, BRAKE ROD	1					
16	55C–F4742–00	GROMMET	1					
17	55C–F6259–00	COLLAR	1					
18	55C–F5888–00	COVER, RESERVOIR TANK	1					
19	98507–06025	SCREW, PAN HEAD	1					
20	B17–F133F–00	BRACKET, MASTER CYLINDER	1					
21	91312–08020	BOLT, HEXAGON SOCKET HEAD	2					
22	91312–08016	BOLT, HEXAGON SOCKET HEAD	2					
23	90240–08124	PIN, CLEVIS	1					
24	90201–08083	WASHER, PLATE	1					
25	91401–20012	PIN, COTTER	1					
26	2ND–F5873–21	HOSE, BRAKE 2	1					
27	90401–10812	BOLT, UNION	2					

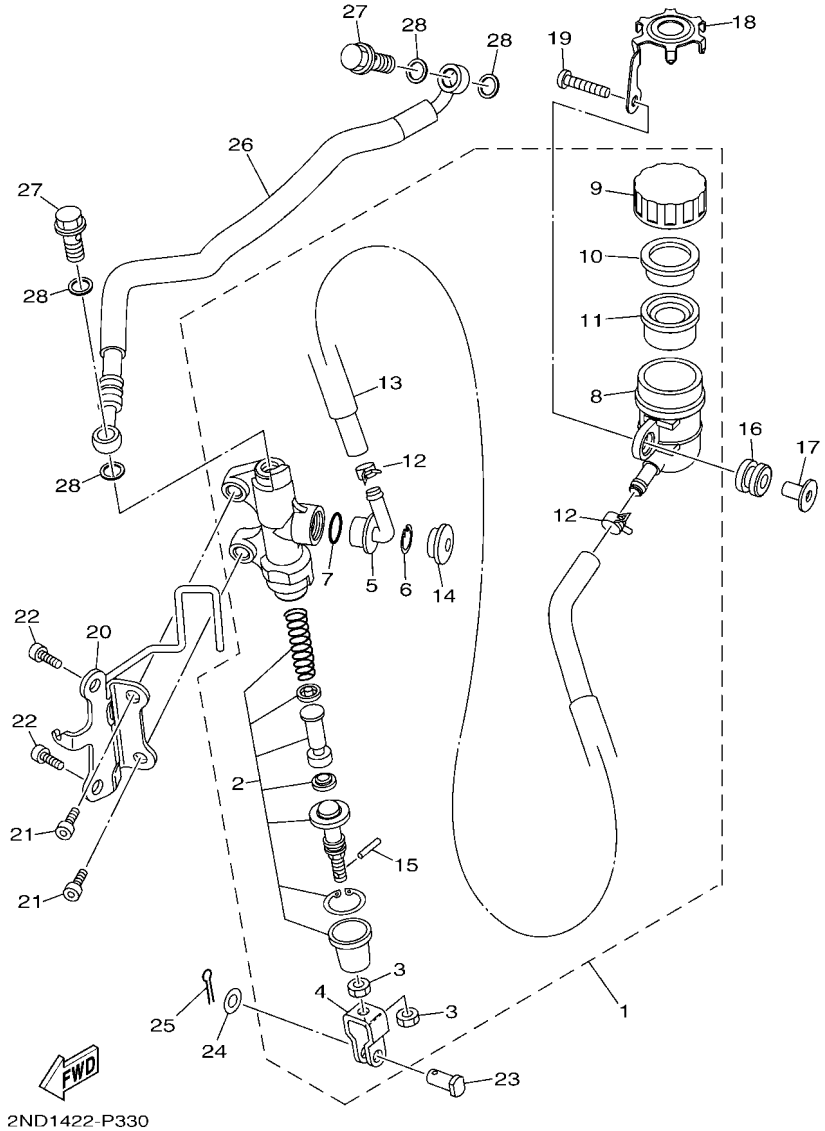

FIG. 32 REAR MASTER CYLINDER

REF. NO.	PART NO.	DESCRIPTION	B17D					REMARKS
28	90201–10118	WASHER, PLATE	4					

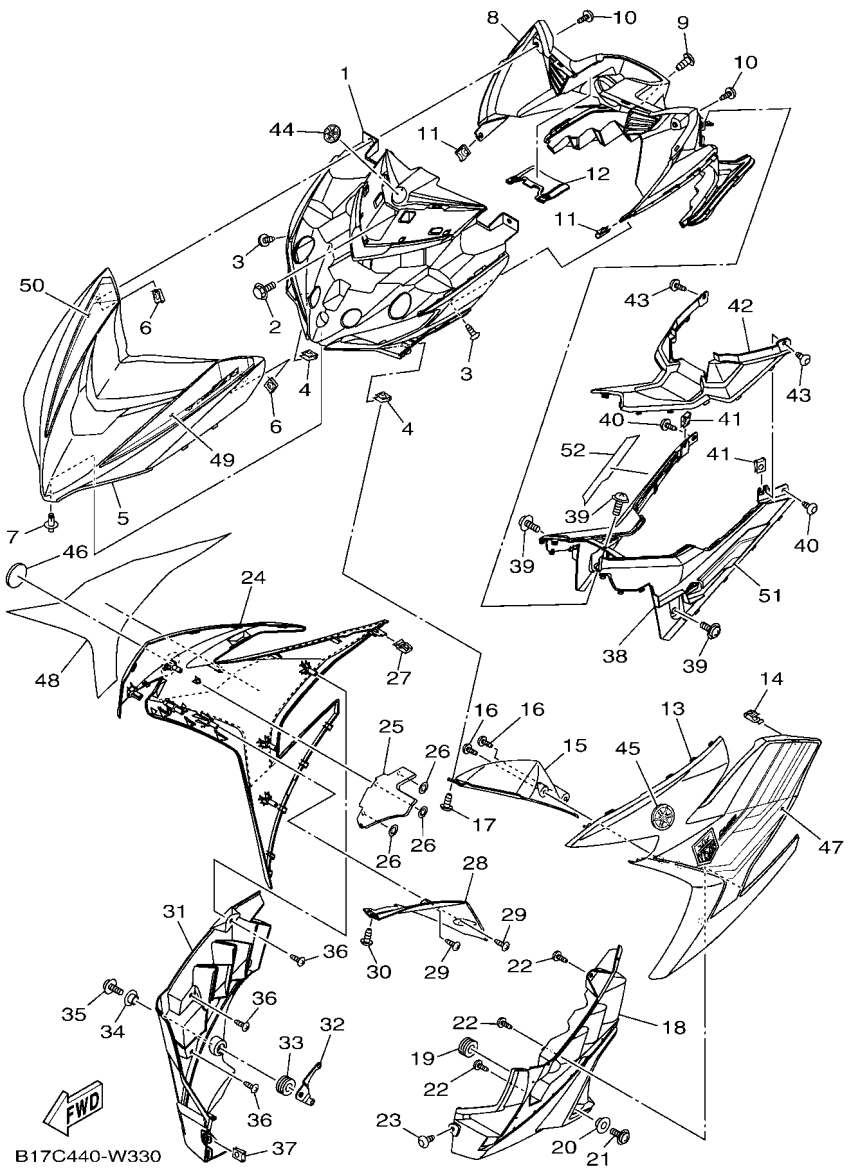

FIG. 33 LEG SHIELD

REF. NO.	PART NO.	DESCRIPTION	B17D					REMARKS
1	B17–F836K–00	PANEL, INNER 1	1					
2	90119–06137	BOLT, WITH WASHER	1					
3	90160–05009	SCREW, ROUND TAPPING	2					
4	90183–05807	NUT, SPRING	2					
5	B17–F3391–00–P5	PANEL, FRONT	1					UR FOR RYC1
	B17–F3391–00–PC	PANEL, FRONT	1					UR FOR MS1
	B17–F3391–00–PD	PANEL, FRONT	1					UR FOR MDNCM1
	B17–F3391–00–P9	PANEL, FRONT	1					UR MBM3 FOR VOM2
6	90183–05807	NUT, SPRING	2					
7	90269–06816	RIVET	1					
8	B17–F836L–00	PANEL, INNER 2	1					
9	90159–06817	SCREW, WITH WASHER	1					
10	90160–05009	SCREW, ROUND TAPPING	2					
11	90183–05807	NUT, SPRING	2					
12	B17–F843J–00	COVER 3	1					
13	B17–F835U–00–PJ	PANEL 1	1					UR FOR RYC1
	B17–F835U–00–P6	PANEL 1	1					UR FOR MS1
	B17–F835U–00–PG	PANEL 1	1					UR FOR MDNCM1
	B17–F835U–00–PH	PANEL 1	1					UR FOR VOM2
14	5P0–F8379–00	HOOK	1					
15	B17–F137U–00	GUIDE, AIR 1	1					
16	97702–40014	SCREW, TAPPING	2					
17	90160–05009	SCREW, ROUND TAPPING	1					
18	B17–F8385–00	COVER, LOWER	1					
19	90480–18418	GROMMET	1					
20	90387–09801	COLLAR	1					
21	90159–06033	SCREW, WITH WASHER	1					

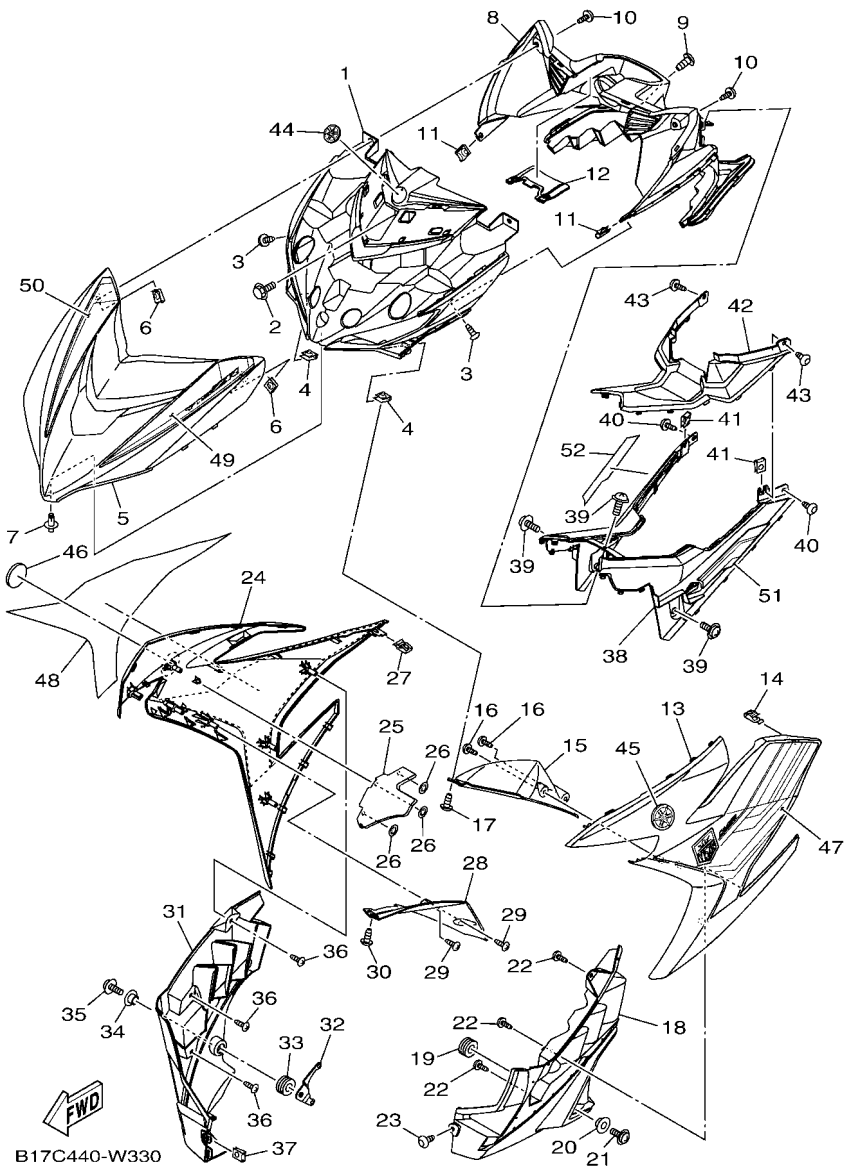

FIG. 33 LEG SHIELD

REF. NO.	PART NO.	DESCRIPTION	B17D					REMARKS
22	97702–40014	SCREW, TAPPING	3					
23	90160–05009	SCREW, ROUND TAPPING	1					
24	B17–F835V–00–PJ	PANEL 2	1					UR FOR RYC1
	B17–F835V–00–P6	PANEL 2	1					UR FOR MS1
	B17–F835V–00–PG	PANEL 2	1					UR FOR MDNCM1
	B17–F835V–00–PH	PANEL 2	1					UR FOR VOM2
25	B17–F199H–00	SHIELD, HEAT	1					
26	90183–05801	NUT, SPRING	3					
27	5P0–F8379–00	HOOK	1					
28	B17–F137V–00	GUIDE, AIR 2	1					
29	97702–40014	SCREW, TAPPING	2					
30	90160–05009	SCREW, ROUND TAPPING	1					
31	B17–F8395–00	COVER, UNDER 2	1					
32	B17–F8322–00	STAY 2	1					
33	90480–18418	GROMMET	1					
34	90387–09801	COLLAR	1					
35	90159–06033	SCREW, WITH WASHER	1					
36	97702–40014	SCREW, TAPPING	3					
37	90183–05807	NUT, SPRING	1					
38	B17–F842M–00–P6	COVER 1	1					UR FOR RYC1
	B17–F842M–00–PC	COVER 1	1					UR FOR MS1
	B17–F842M–00–PD	COVER 1	1					UR FOR MDNCM1
	B17–F842M–00–PE	COVER 1	1					UR FOR VOM2
39	90159–06033	SCREW, WITH WASHER	3					
40	90160–05009	SCREW, ROUND TAPPING	2					
41	90183–05807	NUT, SPRING	2					
42	B17–F842N–00	COVER 2	1					

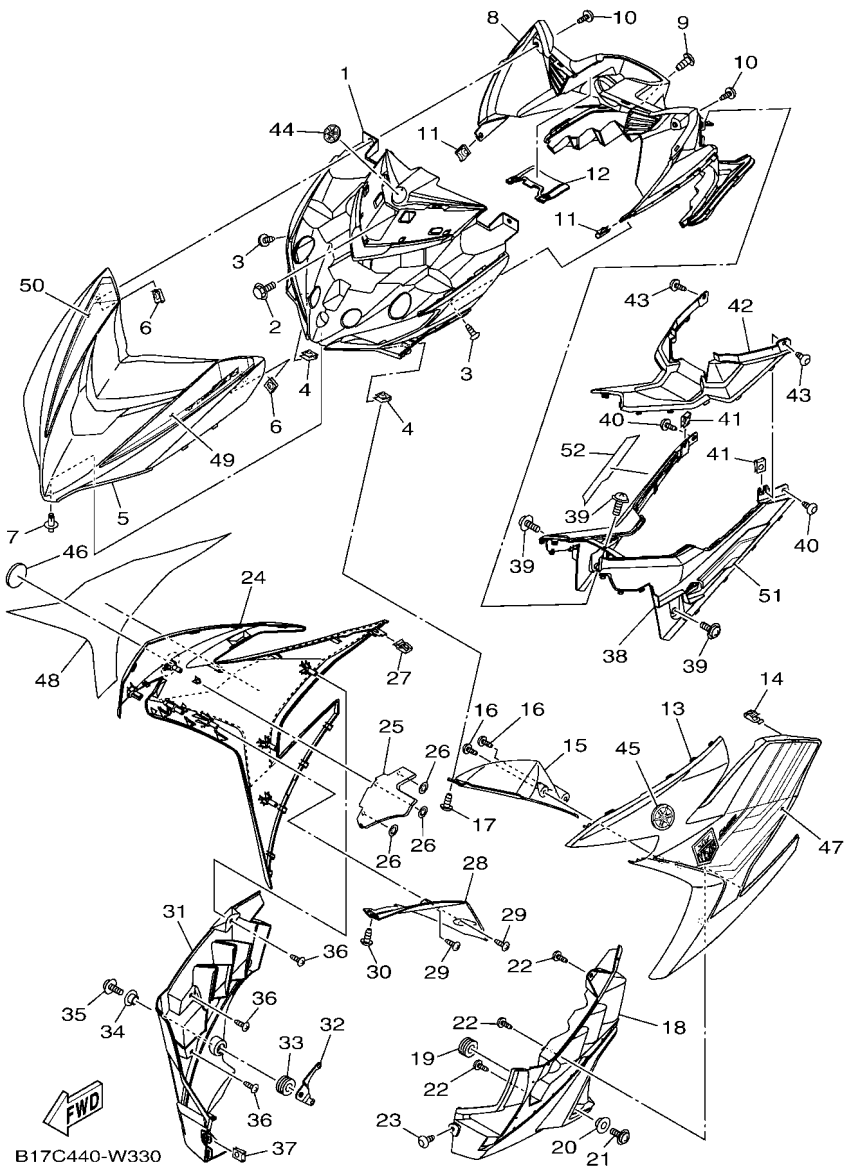

FIG. 33 LEG SHIELD

REF. NO.	PART NO.	DESCRIPTION	B17D					REMARKS
43	90160–05009	SCREW, ROUND TAPPING	2					
44	B17–F836B–30	TUNING FORK MARK	1					
45	B17–F836B–20	TUNING FORK MARK	1					
46	B17–F837B–20	TUNING FORK MARK	1					
47	B17–F8391–T0	GRAPHIC 1	1					UR FOR RYC1
	B17–F8391–U0	GRAPHIC 1	1					UR FOR MS1
	B17–F8391–V0	GRAPHIC 1	1					UR FOR MDNCM1
	B17–F8391–W0	GRAPHIC 1	1					UR FOR VOM2
48	B17–F8392–T0	GRAPHIC 2	1					UR FOR RYC1
	B17–F8392–U0	GRAPHIC 2	1					UR FOR MS1
	B17–F8392–V0	GRAPHIC 2	1					UR FOR MDNCM1
	B17–F8392–W0	GRAPHIC 2	1					UR FOR VOM2
49	B17–F839A–F0	GRAPHIC 7	1					UR FOR RYC1
	B17–F839A–G0	GRAPHIC 7	1					UR FOR MS1
	B17–F839A–H0	GRAPHIC 7	1					UR FOR MDNCM1
	B17–F839A–J0	GRAPHIC 7	1					UR FOR VOM2
50	B17–F839E–F0	GRAPHIC 8	1					UR FOR RYC1
	B17–F839E–G0	GRAPHIC 8	1					UR FOR MS1
	B17–F839E–H0	GRAPHIC 8	1					UR FOR MDNCM1
	B17–F839E–J0	GRAPHIC 8	1					UR FOR VOM2
51	B17–F839F–80	GRAPHIC 9	1					UR FOR RYC1
	B17–F839F–90	GRAPHIC 9	1					UR FOR MS1
	B17–F839F–A0	GRAPHIC 9	1					UR FOR MDNCM1
	B17–F839F–B0	GRAPHIC 9	1					UR FOR VOM2
52	B17–F839G–40	GRAPHIC 10	1					UR FOR RYC1
	B17–F839G–50	GRAPHIC 10	1					UR FOR MS1
	B17–F839G–60	GRAPHIC 10	1					UR FOR MDNCM1

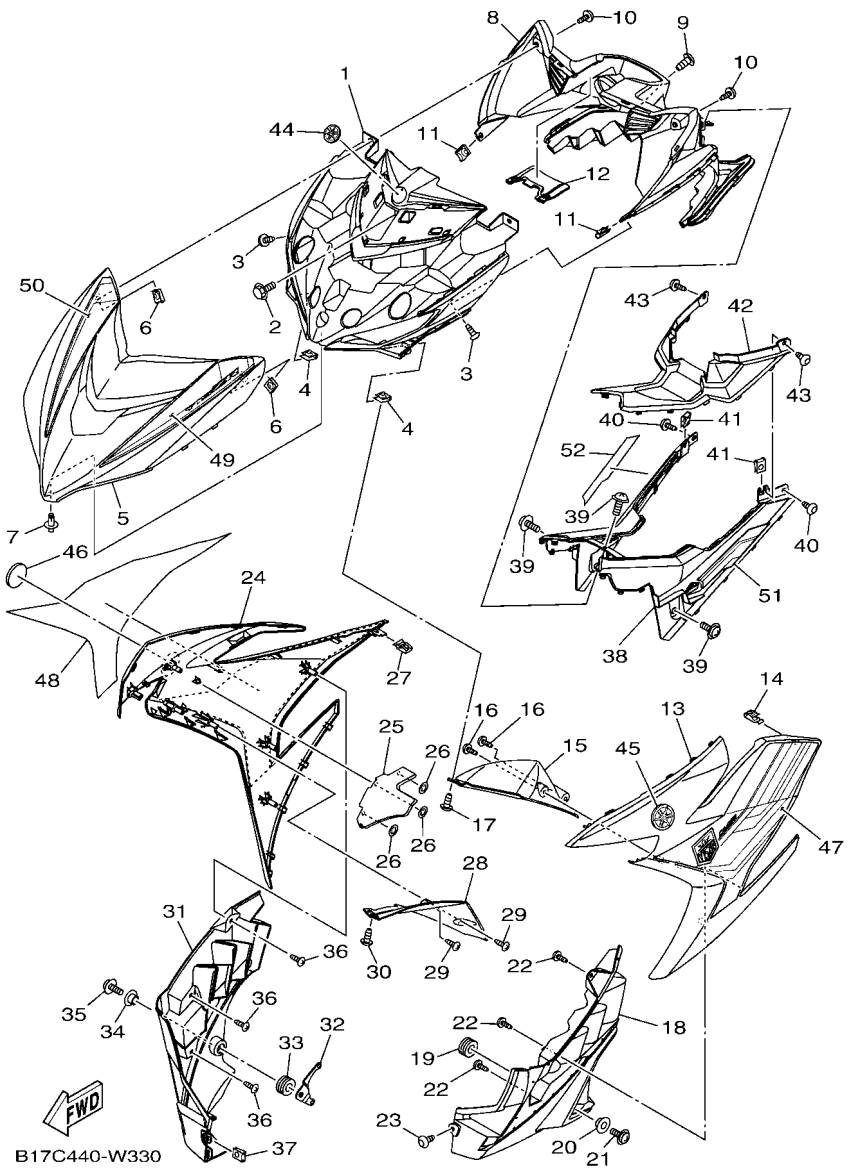

FIG. 33 LEG SHIELD

REF. NO.	PART NO.	DESCRIPTION	B17D					REMARKS
52	B17–F839G–70	GRAPHIC 10	1					UR FOR VOM2

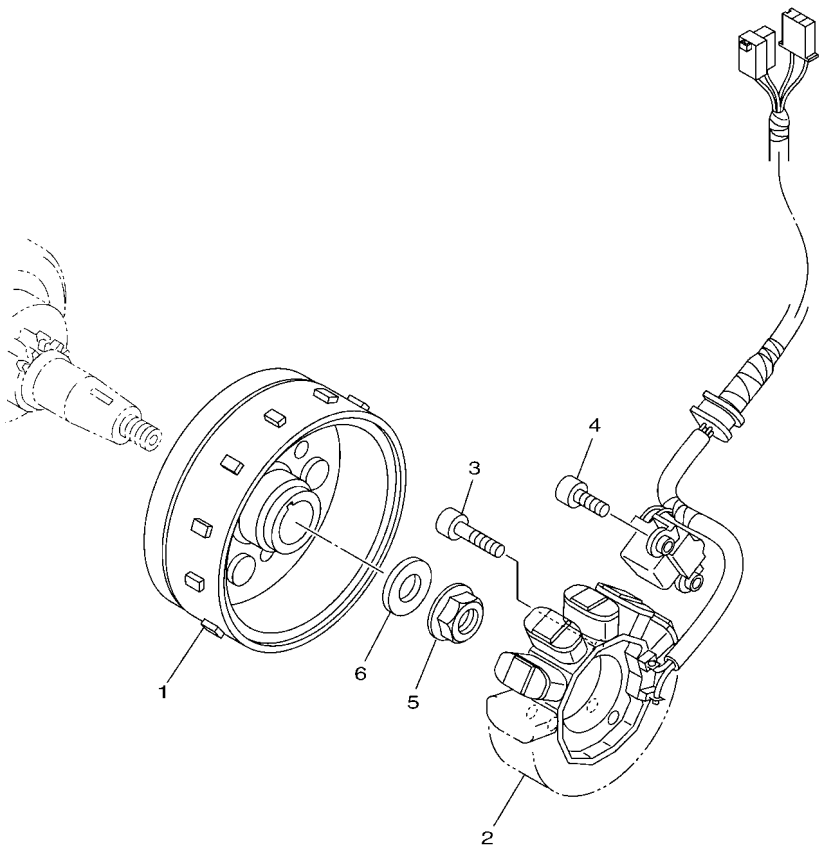

2ND1422-P360

FIG. 34 GENERATOR

REF. NO.	PART NO.	DESCRIPTION	B17D					REMARKS
1	2PV–H1450–01	ROTOR ASSY	1					
2	2PV–H1410–01	STATOR ASSY	1					
3	91332–06025	BOLT	3					
4	91332–06016	BOLT	2					
5	95702–12500	NUT, FLANGE	1					
6	90201–12019	WASHER, PLATE	1					

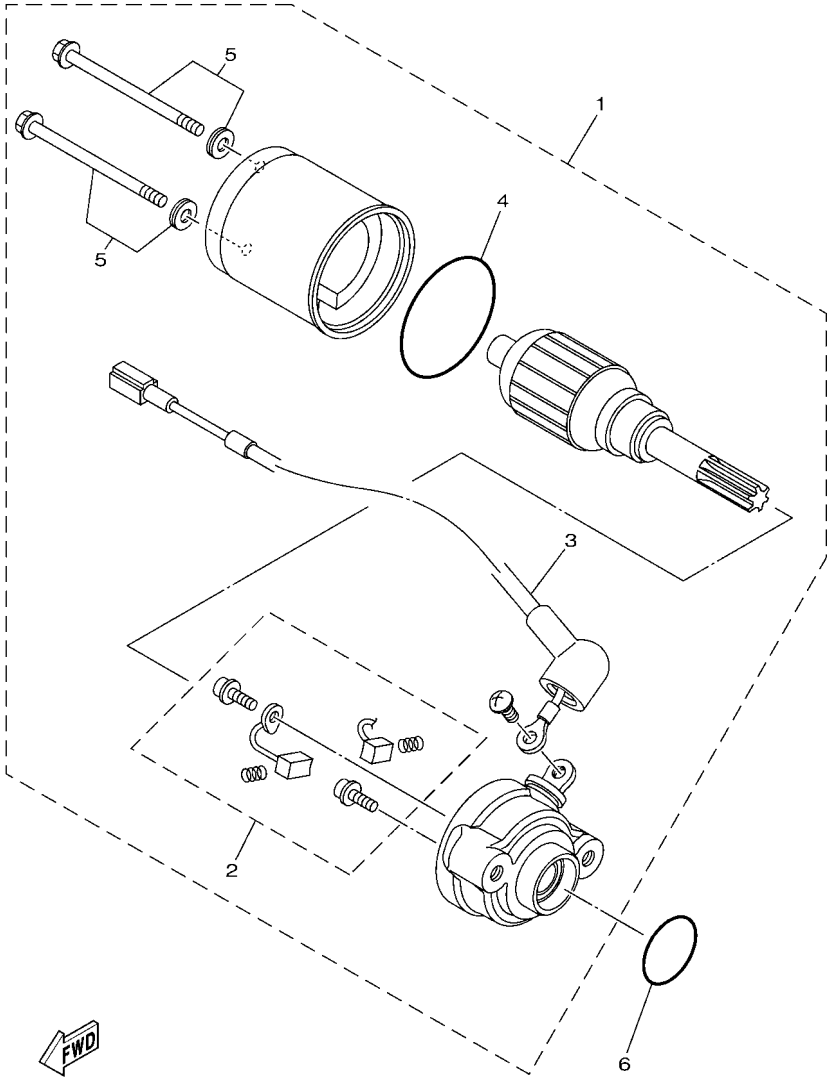

2ND1422-P370

FIG. 35 STARTING MOTOR

REF. NO.	PART NO.	DESCRIPTION	B17D					REMARKS
1	2PV–H1800–00	STARTING MOTOR ASSY	1					
2	5TP–H1801–00	.BRUSH SET	1					
3	5D7–H183G–00	.CORD COMP.	1					
4	5D9–H1861–00	.GASKET	1					
5	5D9–H1828–00	.SCREW SET	2					
6	93210–26805	O-RING	1					

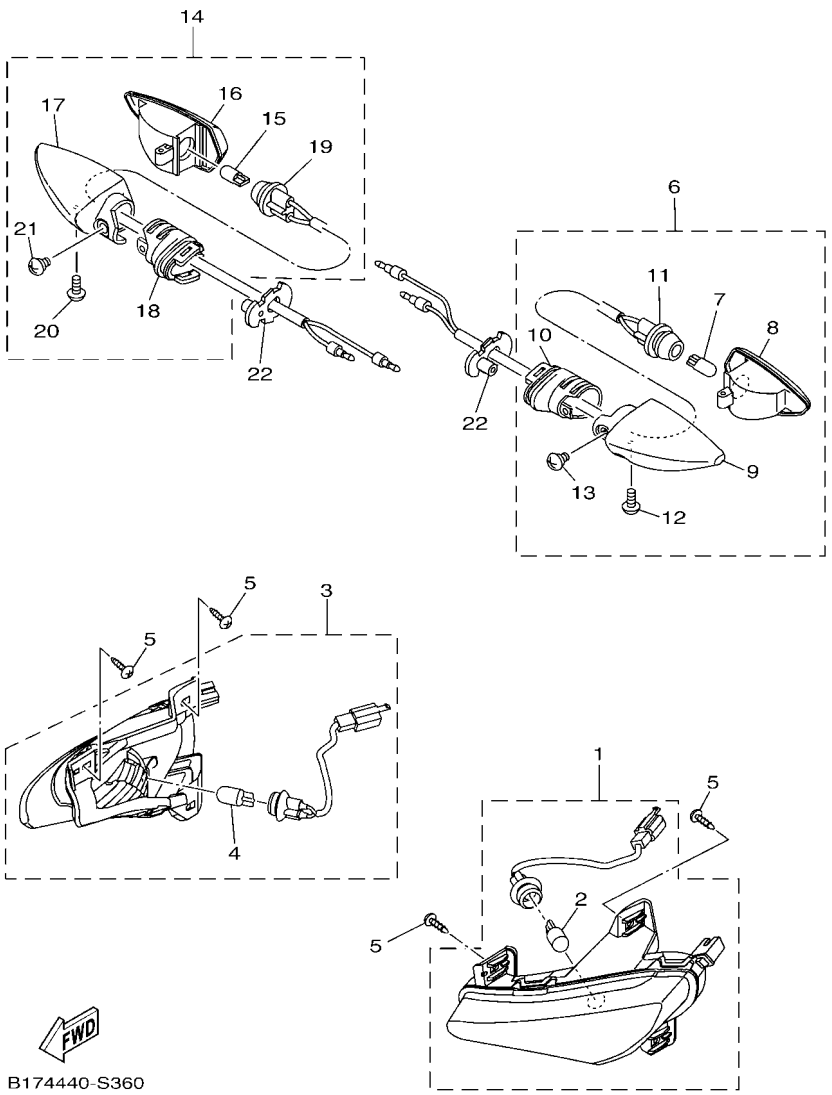

FIG. 36 FLASHER LIGHT

REF. NO.	PART NO.	DESCRIPTION	B17D					REMARKS
1	2ND–H3310–00	FRONT FLASHER LIGHT ASSY 1	1					
2	2CB–H3311–00	.BULB, FLASHER (12V-10W)	1					
3	2ND–H3320–00	FRONT FLASHER LIGHT ASSY 2	1					
4	2CB–H3311–00	.BULB, FLASHER (12V-10W)	1					
5	97702–40014	SCREW, TAPPING	4					
6	2CB–H3330–10	REAR FLASHER LIGHT ASSY 1	1					
7	55D–H3311–00	.BULB, FLASHER (12V-10W)	1					
8	55D–H333A–00	.LENS COMP 1	1					
9	55D–H3323–00	.BODY	1					
10	55D–H3328–00	.STAY, FLASHER 2	1					
11	2CB–H331E–10	.CORD ASSY	1					
12	55D–H3333–00	.SCREW, LENS FITTING	1					
13	55D–H3358–00	.SCREW, SPECIAL	1					
14	2CB–H3340–10	REAR FLASHER LIGHT ASSY 2	1					
15	55D–H3311–00	.BULB, FLASHER (12V-10W)	1					
16	55D–H334A–00	.LENS COMP 2	1					
17	55D–H332M–00	.BODY 2	1					
18	55D–H3328–00	.STAY, FLASHER 2	1					
19	2CB–H334E–10	.CORD ASSY	1					
20	55D–H3333–00	.SCREW, LENS FITTING	1					
21	55D–H3358–00	.SCREW, SPECIAL	1					
22	1VP–H3318–00	STAY, FLASHER 1	2					

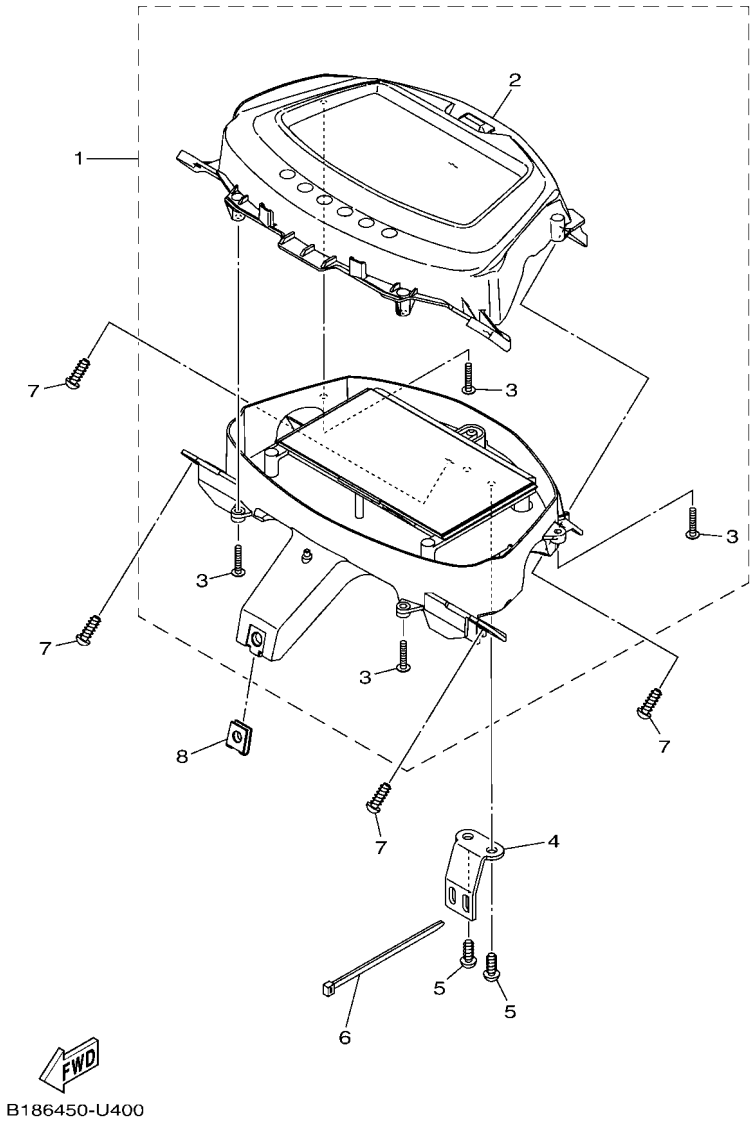

FIG. 37 METER

REF. NO.	PART NO.	DESCRIPTION	B17D					REMARKS
1	2PV–H3500–42	METER ASSY	1					
2	2PV–H3571–00	.CASE, SPEEDOMETER UPPER	1					
3	97702–30016	.SCREW,TAPPING	4					
4	B17–H3614–00	BRACKET	1					
5	97702–50016	SCREW,TAPPING	2					
6	90464–36800	CLAMP	1					
7	97702–50016	SCREW,TAPPING	4					
8	90183–05807	NUT, SPRING	1					

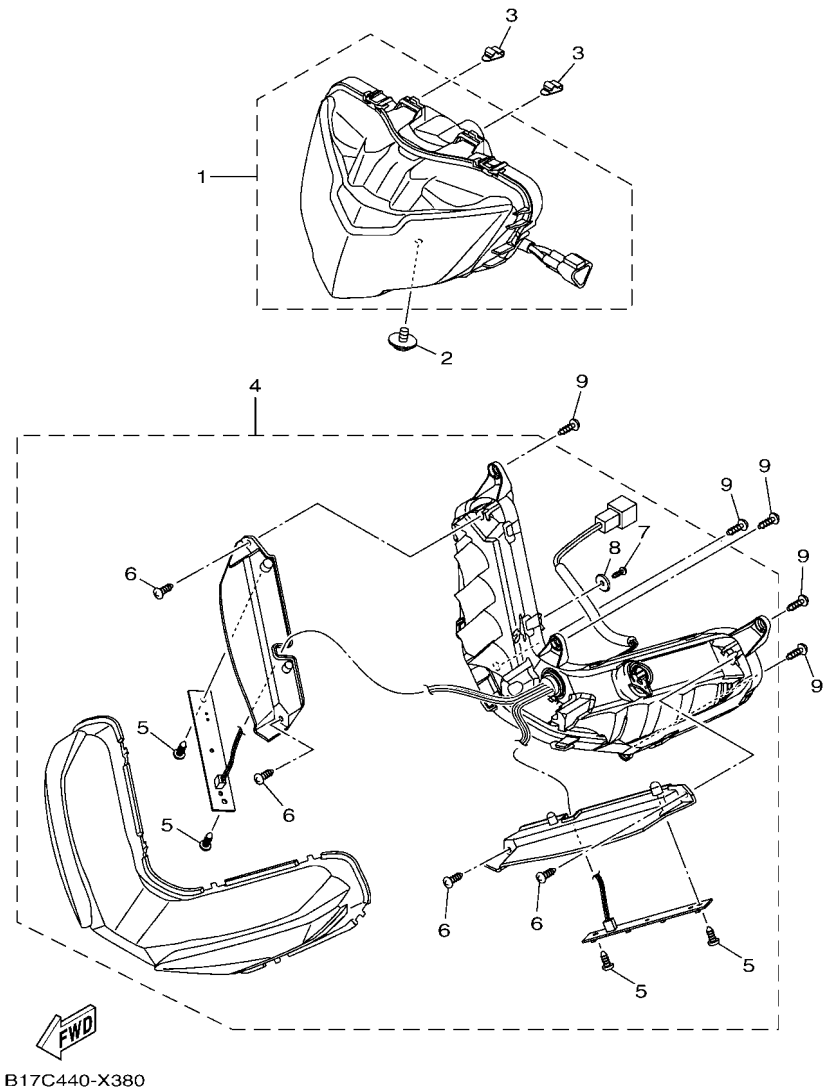

FIG. 38 HEADLIGHT

REF. NO.	PART NO.	DESCRIPTION	B17D					REMARKS
1	BDK–H4310–00	HEADLIGHT UNIT ASSY	1					
2	90119–06885	BOLT, WITH WASHER	1					
3	31D–H4374–00	CLIP	2					
4	2PV–H4301–01	PILOT LIGHT ASSY 1	1					
5	97702–40612	.SCREW, TAPPING	4					
6	97702–40612	.SCREW, TAPPING	4					
7	97702–40612	.SCREW, TAPPING	1					
8	1KP–H4127–00	.WASHER, SPECIAL	1					
9	97702–50016	SCREW,TAPPING	5					

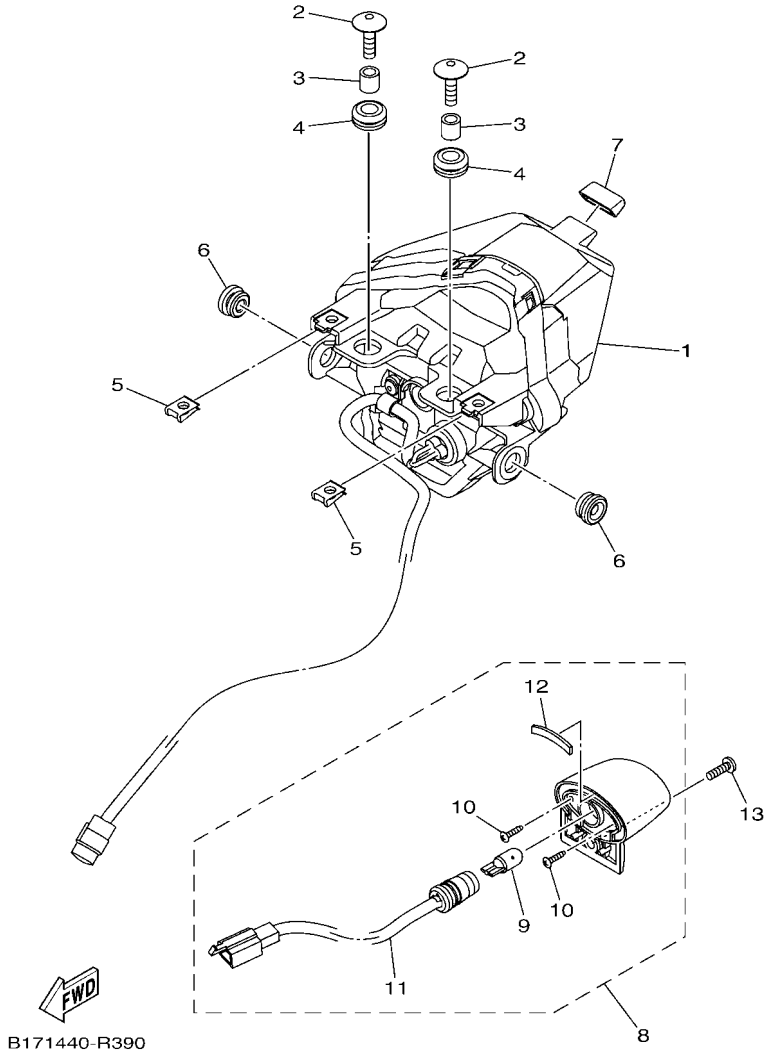

FIG. 39 TAILLIGHT

REF. NO.	PART NO.	DESCRIPTION	B17D					REMARKS
1	1WD–H4710–02	TAILLIGHT UNIT ASSY	1					
2	90111–06137	BOLT, HEXAGON SOCKET BUTTON	2					
3	90387–068C2	COLLAR	2					
4	90480–13001	GROMMET	2					
5	90183–05807	NUT, SPRING	2					
6	90480–10003	GROMMET	2					
7	B17–H4759–00	GROMMET	1					
8	2ND–H4740–00	LICENSE LIGHT ASSY	1					
9	2ND–H4744–00	.BULB (12V-5W)	1					
10	1CK–H4726–00	.SCREW	2					
11	1CK–H4547–00	.CORD, LICENCE LIGHT	1					
12	2ND–H4527–00	.DAMPER	1					
13	98907–04014	SCREW, BIND	1					

FIG. 40 HANDLE SWITCH & LEVER

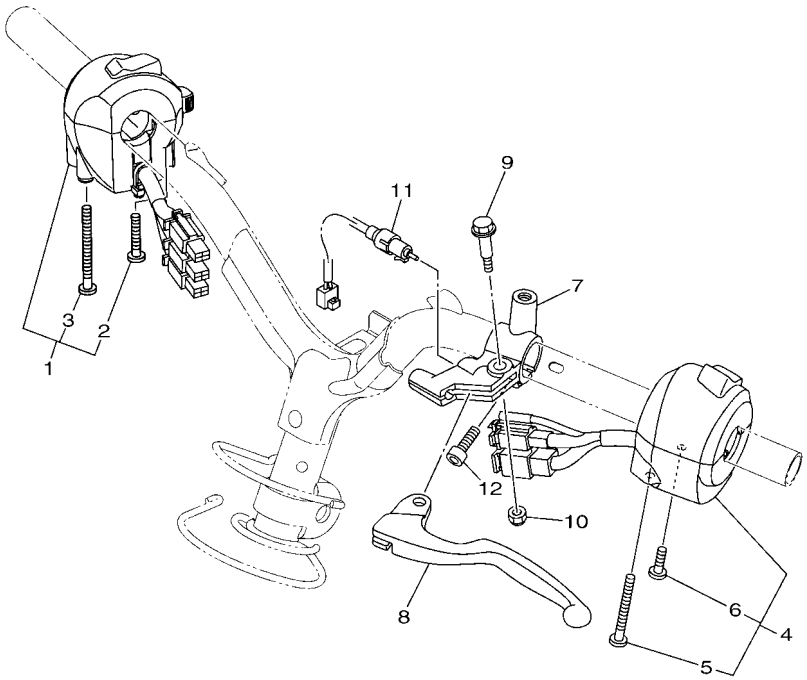

B176440-U400

REF. NO.	PART NO.	DESCRIPTION	B17D					REMARKS
1	2PV–H3963–00	SWITCH, HANDLE 3	1					
2	45P–H2133–00	.SCREW, FITTING	1					
3	45P–H395W–00	.SCREW, SWITCH FITTING	1					
4	2PV–H3973–00	SWITCH, HANDLE 3	1					
5	BK6–H395W–00	.SCREW, SWITCH FITTING	1					
6	1WD–H2133–00	.SCREW, FITTING	1					
7	55P–H2911–00	HOLDER, LEVER 1	1					
8	55P–H3912–10	LEVER 1	1					
9	90109–06827	BOLT	1					
10	95607–06100	NUT, SELF-LOCKING	1					
11	55P–H2917–00	SWITCH	1					
12	91317–06020	BOLT, HEXAGON SOCKET HEAD	1					

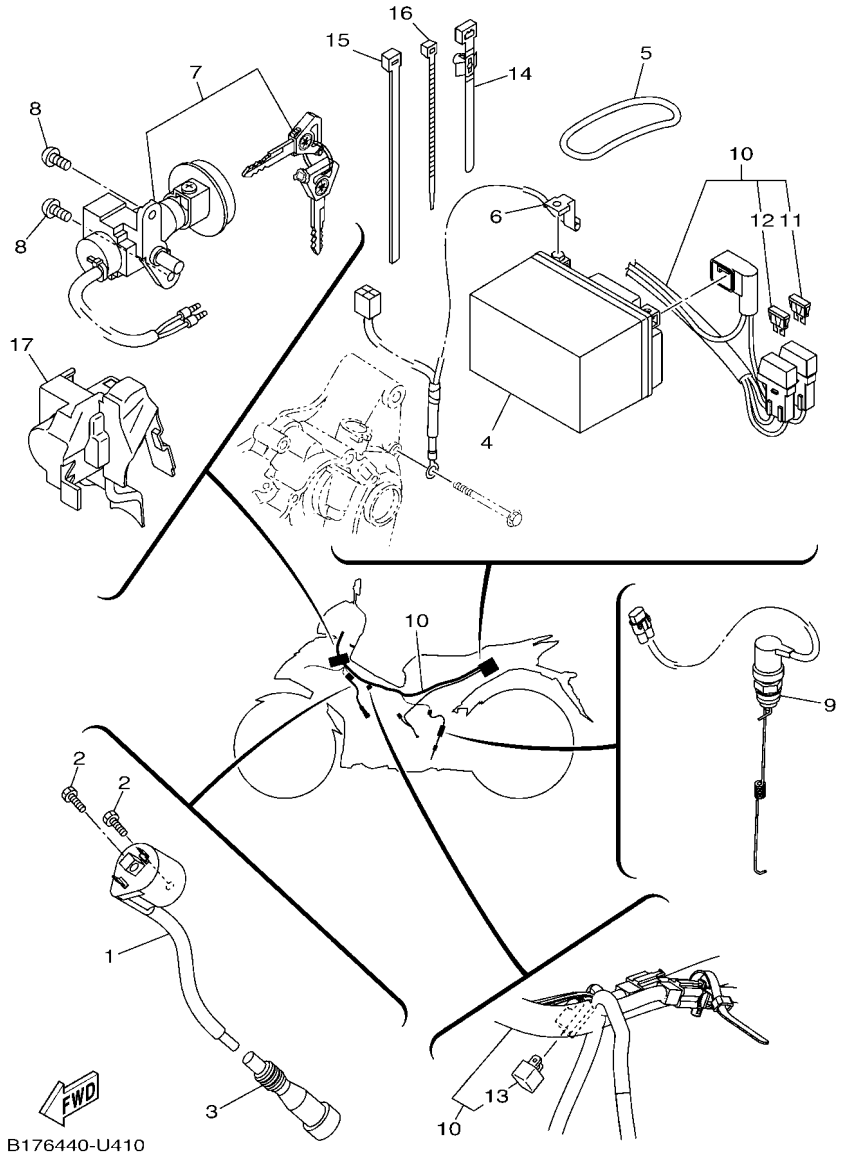

FIG. 41 ELECTRICAL 1

REF. NO.	PART NO.	DESCRIPTION	B17D					REMARKS
1	2PV–H2310–00	IGNITION COIL ASSY	1					
2	97002–06016	BOLT, HEXAGON	2					
3	2ND–H2370–00	PLUG CAP ASSY	1					
4	55D–H2100–00	BATTERY ASSY (PINACO PTZ5S)	1					
5	5VW–H2131–00	BAND, BATTERY	1					
6	B17–H2116–00	WIRE, MINUS LEAD	1					
7	B17–H252E–00	MAIN SWITCH COMP.	1					
8	90149–06309	SCREW	2					
9	2PV–H2530–01	STOP SWITCH ASSY	1					
10	B17–H2590–30	WIRE HARNESS ASSY	1					
11	1VP–H2151–00	.FUSE (15A)	1					
12	31D–H2151–00	.FUSE (7.5A)	1					
13	3WP–81980–00	.DIODE ASSY	1					
14	90464–34002	CLAMP	4					
15	90464–50800	CLAMP	2					
16	90464–36800	CLAMP	1					
17	1FC–F3472–10	PROTECTOR	1					

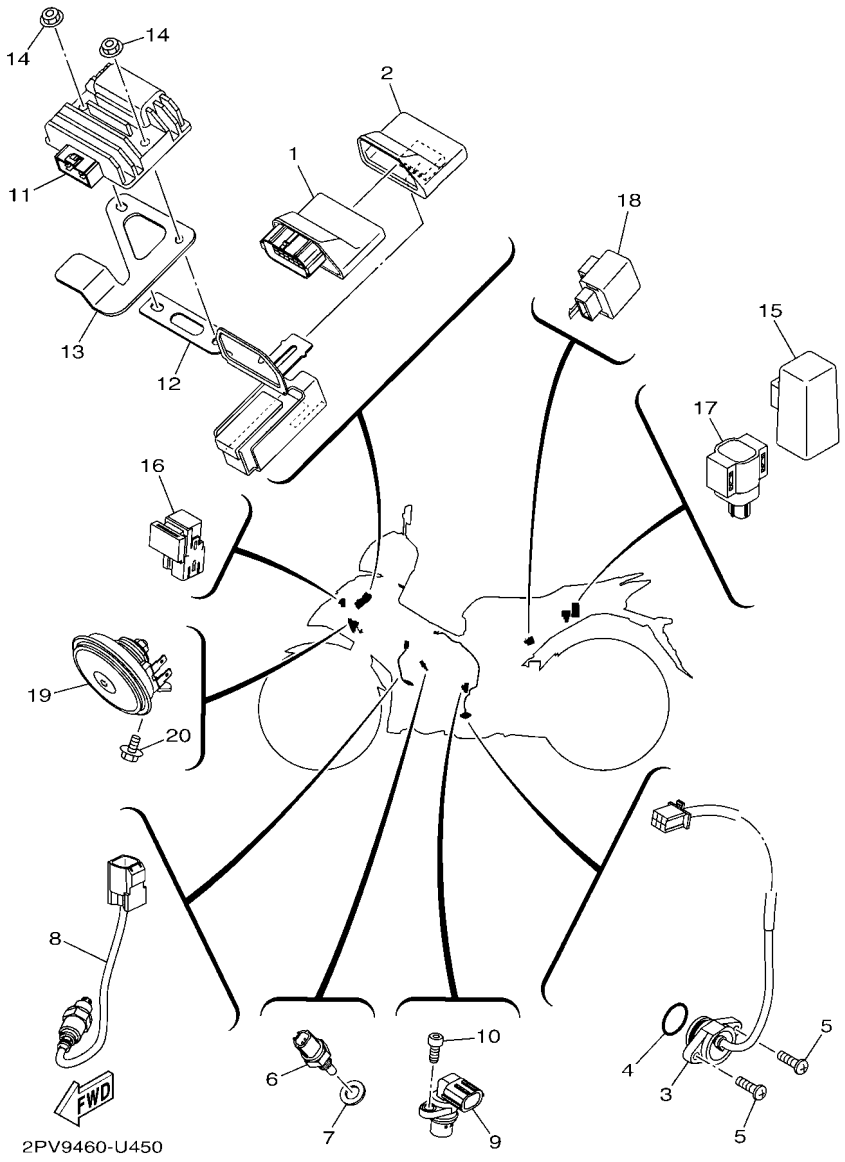

FIG. 42 ELECTRICAL 2

REF. NO.	PART NO.	DESCRIPTION	B17D					REMARKS
1	2PV–H591A–10	ENGINE CONTROL UNIT ASSY	1					
2	2PV–H5546–10	BAND	1					
3	2ND–H2540–00	NEUTRAL SWITCH ASSY	1					
4	93210–21801	O-RING	1					
5	98502–05016	SCREW,PAN HEAD	2					
6	52B–H3591–00	THERMO UNIT	1					
7	90430–10807	GASKET	1					
8	2BM–H592A–20	SENSOR, OXYGEN	1					
9	B48–H3755–01	SENSOR, SPEED	1					
10	91332–06014	BOLT	1					
11	BK6–H1960–00	RECTIFIER & REGULATOR ASSY	1					
12	B17–F8426–10	BRACKET 1	1					
13	B17–F8469–00	BRKT 8	1					
14	95702–06500	NUT, FLANGE	2					
15	5TP–H1940–00	STARTER RELAY ASSY	1					
16	BK6–H1950–00	RELAY ASSY	1					
17	1PA–H2576–00	SENSOR, LEAN ANGLE	1					
18	3XV–83350–22	FLASHER RELAY ASSY	1					
19	B17–H3371–00	HORN	1					
20	95D02–06012	BOLT, FLANGE DEEP RECESS	1					

PART NO.	REF. NO.
5YP–12411–01	6 – 1
50C–2536G–00	28 – 18
3GD–25803–00	28 – 7
36Y–2589H–00	30 – 9
5BU–27234–00	32 – 15
3WP–81980–00	41 – 13
3XV–83350–22	42 – 18
B17–E1102–01	1 – 1
1S8–E111F–00	4 – 9
1S7–E1133–10	1 – 2
2PV–E1166–01	8 – 31
2PV–E1181–00	1 – 15
2PV–E1185–00	5 – 4
B17–E1191–00	1 – 7
2PV–E1193–00	1 – 11
2ND–E1196–00	5 – 5
2PV–E1311–10	1 – 19
1S8–E1351–00	1 – 20
2PV–E1361–00	1 – 12
B17–E1400–00	2 – 1
2ND–E1412–00	2 – 2
B17–E1412–00	2 – 2
2ND–E1422–00	2 – 6
B17–E1422–00	2 – 6
2FB–E1454–00	2 – 21
21C–E1496–20	2 – 16
BK6–E1531–10	2 – 22
BK6–E1536–00	2 – 15
3C1–E1549–10	2 – 7
2PV–E1603–00	2 – 14
2ND–E1631–00	2 – 11
2ND–E1633–00	2 – 12
3C1–E1651–11	2 – 5
3C1–E1681–10	2 – 3
1S7–E1951–00	5 – 8
1S7–E1952–02	5 – 9
2PV–E2111–00	3 – 1
B48–E2113–00	3 – 4
1PA–E2117–00	3 – 6
3S0–E2118–00	3 – 5
1PA–E2119–00	3 – 3
2PV–E2121–00	3 – 2
55P–E2126–00	3 – 7
2ND–E2151–00	3 – 8
1CK–E2156–00	3 – 14
5YP–E2157–01	4 – 8
2ND–E2159–00	3 – 9
	3 – 12

PART NO.	REF. NO.
2ND–E2161–00	3 – 11
2PV–E2170–00	4 – 1
2ND–E2210–20	4 – 16
2PV–E2213–00	4 – 17
B63–E2223–00	5 – 2
52B–E2228–00	4 – 14
1PA–E2231–00	4 – 12
2PV–E2241–00	4 – 13
3C1–E2256–00	4 – 15
2PV–E2280–00	4 – 6
1S7–E2288–00	4 – 7
2ND–E2405–10	6 – 6
2ND–E240A–10	6 – 4
1S8–E2413–00	6 – 2
2PV–E2422–00	5 – 1
2PV–E2428–00	5 – 3
2PV–E2443–00	1 – 8
1S7–E2450–01	5 – 7
2ND–E2461–00	6 – 5
B17–E2481–00	6 – 13
B17–E2482–00	6 – 15
2PV–E2576–00	6 – 17
2ND–E2590–10	6 – 9
2ND–E2671–00	6 – 8
2ND–E2675–00	6 – 7
2PV–E3300–01	7 – 1
2PV–E3324–00	7 – 8
3C1–E3327–00	7 – 13
38B–E3411–00	7 – 4
38B–E3440–01	7 – 7
55C–E3447–00	7 – 9
2FB–E3556–00	8 – 2
2PV–E3557–00	8 – 12
2PV–E3585–00	8 – 1
1PA–E3635–00	8 – 3
2PV–E3750–02	8 – 15
BB8–E3761–10	8 – 7
BK6–E3767–00	8 – 14
BB8–E3770–10	8 – 6
2ND–E3907–00	23 – 7
54P–E3915–00	23 – 8
54P–E3938–00	8 – 10
2PV–E3971–01	23 – 13
54P–E4137–00	8 – 11
54P–E4147–00	8 – 8
5CA–E4147–00	8 – 9
2PV–E4199–00	8 – 4
2PV–E4411–00	8 – 17

PART NO.	REF. NO.
2PV–E4412–00	8 – 18
2PV–E441J–01	8 – 28
2PV–E4437–10	8 – 25
5TL–E443E–00	8 – 23
2PV–E4450–00	8 – 19
3C1–E4452–00	8 – 21
2PV–E4453–00	8 – 20
3C1–E4485–00	8 – 26
1S8–E4613–00	9 – 6
B17–E4703–10	9 – 1
B17–E4718–00	9 – 2
B17–E4747–00	31 – 47
B17–E4799–00	9 – 4
2PV–E5113–00	11 – 7
B17–E5142–00	11 – 15
B17–E5150–00	10 – 1
1S8–E5351–00	7 – 3
3C1–E5362–00	11 – 16
55P–E5377–00	10 – 6
B17–E5411–00	11 – 1
B17–E5418–00	11 – 8
B17–E5421–00	11 – 10
2PV–E5441–00	4 – 18
2PV–E5451–00	11 – 2
2PV–E5461–00	11 – 11
B17–E5514–00	12 – 2
38B–E5521–00	12 – 3
2PV–E5524–10	12 – 6
2PV–E5572–00	12 – 12
2PV–E5580–00	12 – 9
5YP–E5580–00	12 – 9
5HV–E5583–00	12 – 10
2PH–E5583–10	12 – 10
1ST–E5614–00	12 – 11
5YP–E5614–00	12 – 11
3C1–E6111–00	13 – 1
45P–E6135–00	13 – 18
3C1–E6144–00	13 – 16
2PV–E6150–00	13 – 5
2ND–E6154–00	13 – 6
38B–E6193–00	13 – 2
2PV–E6321–00	13 – 8
2PV–E6324–00	13 – 10
2UP–E6331–00	13 – 9
2ND–E6333–00	13 – 12
45P–E6337–00	13 – 13
3C1–E6344–00	13 – 17
2PV–E6345–00	13 – 21

PART NO.	REF. NO.
45P–E6351–00	13 – 11
45P–E6356–00	13 – 15
1PA–E6357–00	13 – 22
2ND–E6358–00	13 – 14
45P–E6371–00	13 – 7
2ND–E6380–00	13 – 20
55P–E7121–00	14 – 6
2ND–E7131–00	14 – 5
2ND–E7151–00	14 – 2
3C1–E7211–00	14 – 12
BK8–E7221–00	14 – 20
BK6–E7231–00	14 – 18
BK6–E7241–00	14 – 17
2PV–E7251–00	14 – 14
3C1–E7285–00	14 – 19
2ND–E7402–20	14 – 11
2ND–E7411–00	14 – 1
1S8–E7456–00	14 – 27
3C1–E7471–00	14 – 9
2ND–E8101–01	16 – 4
B17–E8110–10	16 – 9
5H3–E8113–00	16 – 10
21C–E8140–00	16 – 1
3C1–E8337–00	16 – 3
2ND–E8511–00	15 – 4
2ND–E8512–00	15 – 5
2ND–E8513–00	15 – 6
1PA–E8531–00	15 – 7
38B–E8531–00	15 – 7
2PV–E8540–10	15 – 1
5TP–E8542–00	15 – 2
B17–F1110–10	17 – 1
B17–F113J–00	22 – 22
B17–F113K–00	22 – 26
55P–F1173–00	19 – 24
B17–F133F–00	32 – 20
B17–F137U–00	33 – 15
B17–F137V–00	33 – 28
2PV–F1398–10	24 – 12
B17–F1511–10–P0	18 – 1
B17–F1511–10–P5	18 – 1
B17–F1511–10–PD	18 – 1
B17–F1511–10–PE	18 – 1
B17–F1513–00	18 – 2
B17–F1514–00	18 – 3
B17–F160E–00	18 – 18
B17–F1611–00	18 – 6
B17–F1629–01	18 – 10

PART NO.	REF. NO.
B17–F164F–00	18 – 14
B17–F164G–00	18 – 17
B17–F1650–00	20 – 6
B17–F1711–10	19 – 1
B17–F171E–00–P5	19 – 13
B17–F171E–00–PD	19 – 13
B17–F1721–10	19 – 2
B17–F172K–00	19 – 17
B17–F172L–00	19 – 22
B17–F172M–00	19 – 25
B17–F172M–10	19 – 23
1S8–F172W–00	19 – 27
B17–F1731–00–P5	19 – 3
B17–F1731–00–PC	19 – 3
B17–F173E–T0	19 – 33
B17–F173E–U0	19 – 33
B17–F173E–V0	19 – 33
B17–F173E–W0	19 – 33
B17–F173F–T0	19 – 34
B17–F173F–U0	19 – 34
B17–F173F–V0	19 – 34
B17–F173F–W0	19 – 34
B17–F1741–00–P5	19 – 8
B17–F1741–00–PC	19 – 8
B17–F174G–S0	19 – 35
B17–F174G–T0	19 – 35
B17–F174G–U0	19 – 35
B17–F174G–V0	19 – 35
B17–F174H–S0	19 – 36
B17–F174H–T0	19 – 36
B17–F174H–U0	19 – 36
B17–F174H–V0	19 – 36
55C–F1817–00	19 – 30
1S9–F1871–01	19 – 15
5YP–F1875–01	19 – 21
B17–F1978–00	24 – 11
B17–F199H–00	33 – 25
BAX–F2100–00	20 – 1
5B9–F2123–00	20 – 2
B17–F2151–10	20 – 3
B17–F2167–10	28 – 3
B17–F2174–00	27 – 21
B17–F2210–00	20 – 9
B17–F2535–00	17 – 8
B17–F3100–10	22 – 1
2PV–F3110–20	22 – 8
1FC–F3111–10	22 – 16
2ND–F3126–00	22 – 2

PART NO.	REF. NO.
B17–F3136–00	22 – 5
2PV–F3141–20	22 – 15
5LL–F3144–00	22 – 14
4UV–F3145–00	22 – 3
	22 – 6
2JG–F3147–00	22 – 17
5TF–F3152–00	22 – 11
5P0–F3153–00	22 – 18
5P0–F3156–00	22 – 4
	22 – 7
2ND–F3157–00	22 – 10
509–F3158–L0	22 – 12
2ND–F3170–10	22 – 9
31D–F3181–50	22 – 13
B17–F331A–10	21 – 8
B17–F3340–00	22 – 19
31B–F3346–00	22 – 21
B17–F334G–00	21 – 14
B17–F3391–00–P5	33 – 5
B17–F3391–00–P9	33 – 5
B17–F3391–00–PC	33 – 5
B17–F3391–00–PD	33 – 5
4FP–F3411–10	22 – 20
4RT–F3411–10	21 – 4
1KL–F3412–10	21 – 1
4RT–F3412–10	21 – 3
5TL–F3416–01	21 – 6
1P6–F341E–10	21 – 5
5VL–F341E–10	21 – 2
1FC–F3472–10	41 – 17
B17–F4100–01	23 – 1
2ND–F414G–00	29 – 2
1DB–F414G–01	23 – 10
B17–F41B1–00	23 – 16
B17–F4452–00	23 – 17
BAX–F4491–00	23 – 11
4YY–F4610–00	23 – 14
4YY–F4612–00	23 – 15
B17–F470F–00	24 – 2
5VT–F4723–00	24 – 3
2WB–F4727–00	24 – 4
B17–F4730–00	24 – 1
55C–F4742–00	32 – 16
B17–F4773–00–P5	24 – 9
B17–F4773–00–PA	24 – 9
1DY–F4780–00	24 – 5
B17–F478E–00	24 – 7
B17–F478X–00	17 – 2

PART NO.	REF. NO.
B17–F5168–10–33	25 – 1
B17–F5168–10–8L	25 – 1
3NA–F5181–01	25 – 8
B17–F5317–00	27 – 2
B17–F5338–10–33	27 – 1
B17–F5338–10–8L	27 – 1
B17–F5364–00	27 – 4
B17–F5366–00	27 – 6
B17–F5377–00	27 – 7
4NP–F5381–00	20 – 4
5BP–F5381–00	27 – 16
1CK–F5383–00	27 – 24
B17–F5383–00	27 – 24
2ND–F5388–00	27 – 20
B17–F5388–01	27 – 20
B17–F5442–00	27 – 10
B17–F5689–00	27 – 13
2BM–F5802–00	26 – 4
50C–F5802–00	28 – 6
5YP–F5803–50	26 – 5
2DP–F5805–00	26 – 9
1PA–F5806–00	28 – 11
2ND–F5808–00	32 – 2
5P0–F580A–00	30 – 6
2ND–F580E–00	32 – 1
2ND–F580U–01	26 – 3
1PA–F580W–01	28 – 5
50C–F5827–00	28 – 12
50C–F5828–00	28 – 13
50C–F582A–50	32 – 5
B17–F582U–00	26 – 1
2ND–F582U–11	26 – 1
2PV–F582W–00	28 – 1
B17–F582W–00	28 – 1
2PV–F583T–12	30 – 4
2ND–F5852–00	30 – 8
50C–F5852–00	32 – 9
2ND–F5854–00	30 – 7
2VN–F5854–00	32 – 11
2ND–F5855–00	30 – 11
50C–F5855–00	32 – 10
50C–F5866–00	32 – 6
5TL–F5867–11	30 – 12
2ND–F5870–00	30 – 5
2PV–F5872–02	30 – 1
2ND–F5873–21	32 – 26
B17–F5876–00	21 – 12
2PV–F587A–00	21 – 10
55C–F5888–00	32 – 18
3RW–F5889–00	30 – 10
50C–F5894–11	32 – 8
4S3–F5895–00	32 – 13
50C–F589A–00	32 – 14
50C–F5914–00	28 – 10
50C–F5916–00	28 – 20
2BM–F5917–00	26 – 6
50C–F5917–00	28 – 15
2BM–F5919–00	26 – 11
50C–F5919–00	28 – 8
2ND–F5920–00	26 – 13
1PA–F5921–01	28 – 16
5YP–F5924–00	26 – 12
5YP–F5925–01	26 – 10
50C–F5933–00	28 – 19
50C–F5937–00	28 – 14
5YP–F5937–00	26 – 7
50C–F5961–00	28 – 17
B17–F6110–10	29 – 1
B17–F6143–10	29 – 5
B17–F6145–10	29 – 10
4US–F6199–00	29 – 15
B17–F61AA–00–P1	29 – 20
B17–F61AA–00–P8	29 – 20
B17–F61AA–00–P9	29 – 20
B17–F61AA–00–PA	29 – 20
B17–F6216–10–P0	29 – 16
B17–F6216–10–P6	29 – 16
B17–F6216–10–P7	29 – 16
B17–F6240–02	29 – 23
1VP–F6241–00	29 – 24
1VB–F6246–00	29 – 29
55C–F6259–00	32 – 17
B17–F6280–10	29 – 25
B17–F6290–10	29 – 26
B17–F6301–10	29 – 27
B17–F6335–00	29 – 30
B17–F6477–00	29 – 22
B17–F7111–10	31 – 1
5YP–F7112–00	31 – 3
31D–F7114–00	31 – 2
B17–F7211–10	31 – 9
50C–F7222–00	32 – 4
B17–F7311–10	31 – 11
B17–F7411–00	31 – 15
B17–F7413–00	31 – 18
	31 – 24
3C1–F7431–01	31 – 30
B17–F7437–00	31 – 35
	31 – 44
3C1–F7441–01	31 – 39
B17–F7451–00	31 – 17
B17–F7452–00–P0	31 – 29
B17–F7461–00	31 – 23
B17–F7462–00–P0	31 – 38
B17–F8100–10	18 – 19
B17–F8170–00	18 – 20
B17–F8322–00	33 – 32
B17–F835U–00–P6	33 – 13
B17–F835U–00–PG	33 – 13
B17–F835U–00–PH	33 – 13
B17–F835U–00–PJ	33 – 13
B17–F835V–00–P6	33 – 24
B17–F835V–00–PG	33 – 24
B17–F835V–00–PH	33 – 24
B17–F835V–00–PJ	33 – 24
B17–F836B–20	33 – 45
B17–F836B–30	19 – 32
	33 – 44
B17–F836K–00	33 – 1
B17–F836L–00	33 – 8
1S8–F8372–00	23 – 6
5P0–F8379–00	33 – 14
	33 – 27
B17–F837B–20	33 – 46
B17–F8385–00	33 – 18
B17–F8391–T0	33 – 47
B17–F8391–U0	33 – 47
B17–F8391–V0	33 – 47
B17–F8391–W0	33 – 47
B17–F8392–T0	33 – 48
B17–F8392–U0	33 – 48
B17–F8392–V0	33 – 48
B17–F8392–W0	33 – 48
B17–F8395–00	33 – 31
B17–F839A–F0	33 – 49
B17–F839A–G0	33 – 49
B17–F839A–H0	33 – 49
B17–F839A–J0	33 – 49
B17–F839E–F0	33 – 50
B17–F839E–G0	33 – 50
B17–F839E–H0	33 – 50
B17–F839E–J0	33 – 50
B17–F839F–80	33 – 51
B17–F839F–90	33 – 51
B17–F839F–A0	33 – 51
B17–F839F–B0	33 – 51
B17–F839G–40	33 – 52
B17–F839G–50	33 – 52
B17–F839G–60	33 – 52
B17–F839G–70	33 – 52
B17–F8426–10	42 – 12
B17–F842M–00–P6	33 – 38
B17–F842M–00–PC	33 – 38
B17–F842M–00–PD	33 – 38
B17–F842M–00–PE	33 – 38
B17–F842N–00	33 – 42
B17–F843J–00	33 – 12
B17–F8469–00	42 – 13
2PV–H1410–01	34 – 2
2PV–H1450–01	34 – 1
2PV–H1800–00	35 – 1
5TP–H1801–00	35 – 2
5D9–H1828–00	35 – 5
5D7–H183G–00	35 – 3
5D9–H1861–00	35 – 4
5TP–H1940–00	42 – 15
BK6–H1950–00	42 – 16
BK6–H1960–00	42 – 11
55D–H2100–00	41 – 4
B17–H2116–00	41 – 6
5VW–H2131–00	41 – 5
1WD–H2133–00	40 – 6
45P–H2133–00	40 – 2
1VP–H2151–00	41 – 11
31D–H2151–00	41 – 12
2PV–H2310–00	41 – 1
2ND–H2370–00	41 – 3
B17–H252E–00	41 – 7
2PV–H2530–01	41 – 9
2ND–H2540–00	42 – 3
1PA–H2576–00	42 – 17
B17–H2590–30	41 – 10
55P–H2911–00	40 – 7
55P–H2917–00	40 – 11
2ND–H3310–00	36 – 1
2CB–H3311–00	36 – 2
	36 – 4
55D–H3311–00	36 – 7
	36 – 15
1VP–H3318–00	36 – 22
2CB–H331E–10	36 – 11
2ND–H3320–00	36 – 3
55D–H3323–00	36 – 9
55D–H3328–00	36 – 10
	36 – 18
55D–H332M–00	36 – 17
2CB–H3330–10	36 – 6
55D–H3333–00	36 – 12
	36 – 20
55D–H333A–00	36 – 8
2CB–H3340–10	36 – 14
55D–H334A–00	36 – 16
2CB–H334E–10	36 – 19
55D–H3358–00	36 – 13
	36 – 21
B17–H3371–00	42 – 19
2PV–H3500–42	37 – 1
2PV–H3571–00	37 – 2
52B–H3591–00	42 – 6
B17–H3614–00	37 – 4
B48–H3755–01	42 – 9
55P–H3912–10	40 – 8
2ND–H3922–00	30 – 13
45P–H395W–00	40 – 3
BK6–H395W–00	40 – 5
2PV–H3963–00	40 – 1
2PV–H3973–00	40 – 4
2DP–H3980–01	30 – 16
1KP–H4127–00	38 – 8
2PV–H4301–01	38 – 4
BDK–H4310–00	38 – 1
31D–H4374–00	38 – 3
2ND–H4527–00	39 – 12
1CK–H4547–00	39 – 11
1WD–H4710–02	39 – 1
1CK–H4726–00	39 – 10
2ND–H4740–00	39 – 8
2ND–H4744–00	39 – 9
B17–H4759–00	39 – 7
2FC–H5111–00	22 – 23
	22 – 27
55D–H5130–00	18 – 13
2PV–H5546–10	42 – 2
2ND–H5752–00	23 – 9
2PV–H591A–10	42 – 1
2BM–H592A–20	42 – 8
4C9–W0048–00	26 – 8
50C–W0048–00	28 – 9
90105–10831	26 – 14
90105–10855	20 – 10
90105–10896	29 – 3
90105–108B4	17 – 5
90105–108B5	17 – 4
90109–06279	16 – 2
90109–06577	30 – 14
90109–06827	40 – 9
90109–068A4	18 – 4
90109–08034	31 – 12
90109–08087	26 – 2
	28 – 2
90110–06873	12 – 13
90111–06137	39 – 2
90111–06807	9 – 3
	9 – 5
90111–06848	18 – 11
90116–08826	27 – 11
90119–06044	18 – 8
	19 – 16
90119–06137	8 – 30
	33 – 2
90119–06155	20 – 7
90119–06885	38 – 2
90123–08046	29 – 31
90149–06309	41 – 8
90159–06033	33 – 21
	33 – 35
	33 – 39
90159–06817	33 – 9
90160–05009	19 – 4
	19 – 9
	19 – 14
	29 – 12
	33 – 3
	33 – 10
	33 – 17
	33 – 23
	33 – 30
	33 – 40
	33 – 43
90163–05803	8 – 22
90170–05803	3 – 10
	3 – 13
90170–08401	29 – 32
90170–10012	2 – 28
90179–10805	17 – 6
90179–12808	13 – 4
90179–14001	13 – 19
90179–25002	21 – 7

PART NO.	REF. NO.
90183–05801	33 – 26
90183–05807	18 – 9
	19 – 6
	19 – 11
	29 – 8
	29 – 13
	29 – 21
	33 – 4
	33 – 6
	33 – 11
	33 – 37
	33 – 41
	37 – 8
	39 – 5
90185–05803	22 – 24
	22 – 28
90185–10011	29 – 4
90185–10091	25 – 9
90201–06880	6 – 12
90201–08083	32 – 24
90201–08612	9 – 8
90201–086P8	31 – 37
	31 – 46
90201–08730	9 – 10
90201–08859	1 – 13
90201–10118	30 – 3
	32 – 28
90201–101J1	25 – 10
90201–105E8	12 – 4
90201–12019	13 – 3
	34 – 6
90201–14811	31 – 7
90201–15030	27 – 18
90201–15821	2 – 17
90201–173F4	14 – 22
90201–20814	14 – 21
90201–25290	12 – 8
90208–20003	13 – 27
90209–17285	14 – 3
90209–18208	14 – 15
90214–10800	2 – 18
90215–10284	2 – 27
90240–08124	32 – 23
90269–06816	18 – 12
	19 – 7
	19 – 12
	29 – 14
	33 – 7

PART NO.	REF. NO.
90280–03017	2 – 10
90282–05031	2 – 26
90338–30802	12 – 1
90340–12813	1 – 3
90340–14824	11 – 5
90387–06144	19 – 19
90387–068C2	39 – 3
90387–08812	31 – 48
90387–08835	23 – 3
90387–09801	33 – 20
	33 – 34
90387–10277	25 – 7
90387–15810	2 – 23
90387–15830	27 – 19
90387–17804	14 – 13
90401–10812	30 – 2
	32 – 27
90430–06803	1 – 5
	1 – 10
	1 – 22
90430–10807	42 – 7
90445–09823	19 – 28
90445–22800	31 – 6
90450–27806	6 – 14
	6 – 16
90450–39806	8 – 34
90450–48803	8 – 16
90464–16012	20 – 8
90464–34002	41 – 14
90464–36800	37 – 6
	41 – 16
90464–50800	41 – 15
90464–54086	18 – 7
90467–08003	19 – 29
90467–09006	19 – 31
90467–10805	6 – 18
90467–12085	32 – 12
90467–12800	8 – 24
90467–13064	8 – 32
90467–13858	8 – 33
90467–20804	8 – 27
90467–22801	8 – 29
90480–01559	17 – 7
	29 – 9
90480–10003	39 – 6
90480–13001	39 – 4
90480–13018	19 – 20
90480–15808	6 – 10

PART NO.	REF. NO.
90480–18418	33 – 19
	33 – 33
90480–18810	23 – 4
90480–18811	23 – 5
90501–030A0	12 – 12
90501–06022	15 – 3
90501–06800	15 – 8
90501–12743	31 – 32
	31 – 41
90501–16800	2 – 19
90501–18576	7 – 5
90506–20041	31 – 10
90506–23809	31 – 14
90506–35806	31 – 5
90508–183B9	31 – 20
	31 – 26
90508–32837	16 – 5
90520–02813	17 – 10
90520–08802	29 – 17
90520–10834	29 – 6
90560–10292	25 – 2
91312–06025	30 – 17
91312–06100	1 – 18
91312–08016	32 – 22
91312–08020	16 – 11
	32 – 21
91312–08025	31 – 36
	31 – 45
91317–06020	40 – 12
91332–05010	23 – 12
91332–06014	42 – 10
91332–06016	34 – 4
91332–06025	34 – 3
91401–20012	32 – 25
91401–25015	31 – 22
	31 – 28
	31 – 34
	31 – 43
91401–30030	31 – 4
	31 – 8
91701–08035	31 – 21
	31 – 27
91702–08042	31 – 31
	31 – 40
91810–14809	1 – 16
	1 – 17
	10 – 2
	11 – 3

PART NO.	REF. NO.
91810–14809	11 – 12
92012–05012	29 – 28
92902–06600	27 – 22
93101–10843	11 – 18
93102–12862	13 – 25
93102–12891	16 – 8
93102–20892	14 – 25
93106–20816	25 – 3
93106–22808	27 – 5
93106–26815	27 – 8
93210–09806	4 – 3
93210–148F8	11 – 6
93210–15620	32 – 7
93210–19809	5 – 15
	11 – 17
93210–21801	42 – 4
93210–26805	35 – 6
93210–34802	7 – 6
93210–54805	7 – 12
93210–84804	5 – 6
93306–000Y3	5 – 10
93306–001X6	4 – 5
93306–003YN	14 – 23
93306–004XV	27 – 9
93306–054XB	14 – 7
93306–204Y7	14 – 24
93306–252X7	27 – 3
93306–252Y9	2 – 24
93306–253YB	2 – 25
93306–300YN	25 – 4
93306–305X7	2 – 9
93306–305XP	2 – 8
93306–305XR	2 – 9
93306–305YF	2 – 8
93306–906Y4	4 – 2
93310–325X1	12 – 7
93310–528YK	2 – 4
93315–112Y9	13 – 24
933A6–202X0	14 – 8
93410–20809	14 – 4
93410–22039	14 – 16
93450–16115	2 – 13
93501–04823	31 – 33
	31 – 42
93505–16844	13 – 23
93604–08071	2 – 20
93605–06800	4 – 4
93608–30839	16 – 7

PART NO.	REF. NO.
93822–14800	14 – 26
93900–00817	25 – 6
	27 – 15
94109–17805	25 – 5
94109–17809	25 – 5
94112–17804	27 – 14
94112–17809	27 – 14
94568–D6122	27 – 25
94568–H4096	4 – 11
94700–00330	1 – 14
95022–06012	5 – 12
95022–06025	5 – 11
95301–08700	32 – 3
95302–06600	27 – 23
95307–08700	31 – 13
95602–06100	30 – 15
95602–08200	27 – 12
95602–10200	20 – 11
95602–14200	27 – 17
95607–06100	40 – 10
95607–06200	18 – 15
95612–08630	1 – 6
95614–12100	20 – 5
95702–06500	42 – 14
95702–08500	9 – 7
95702–12500	34 – 5
95812–06030	8 – 13
95D02–06012	17 – 3
	17 – 9
	21 – 9
	21 – 11
	21 – 13
	21 – 15
	22 – 25
	42 – 20
95D02–06030	23 – 2
95D32–06010	19 – 26
95D32–06016	6 – 11
	18 – 16
95D32–06020	24 – 10
95D32–06025	19 – 18
95D32–08040	9 – 9
95D32–10035	28 – 4
95D37–08016	31 – 16
95E32–06010	1 – 4
	1 – 21
	4 – 10
	14 – 28

PART NO.	REF. NO.
95E32–06012	7 – 14
95E32–06016	11 – 9
95E32–06020	1 – 9
	6 – 3
	7 – 10
	8 – 5
95E32–06025	4 – 19
	5 – 13
95E32–06040	10 – 7
	11 – 4
	11 – 13
95E32–06045	10 – 4
95E32–06050	5 – 14
	11 – 14
95E32–06055	10 – 3
95E32–06070	10 – 5
95E32–06080	7 – 11
95E32–06090	11 – 19
97002–06016	41 – 2
97022–06012	18 – 5
97602–04312	30 – 18
97702–30016	37 – 3
97702–40014	19 – 5
	19 – 10
	33 – 16
	33 – 22
	33 – 29
	33 – 36
	36 – 5
97702–40612	38 – 5
	38 – 6
	38 – 7
97702–50016	29 – 7
	29 – 11
	29 – 19
	37 – 5
	37 – 7
	38 – 9
97707–50012	29 – 18
98502–05010	24 – 8
98502–05014	31 – 19
	31 – 25
98502–05016	42 – 5
98502–05025	7 – 2
98502–06012	24 – 6
98507–06025	32 – 19
98512–06012	14 – 10
98907–04014	39 – 13

PART NO.	REF. NO.	PART NO.	REF. NO.	PART NO.	REF. NO.	PART NO.	REF. NO.	PART NO.	REF. NO.	PART NO.	REF. NO.
99002–10600	16 – 6										
99009–10400	12 – 5										
99009–20500	13 – 26										