YAMAHA

PARTS CATALOGUE

PGD

VRC1

CS6

LNR125 (B926) MALAYSIA

YAMAHA GENUINE Parts & Accessories

1YB92-440E1

( )

LNR125
PARTS CATALOGUE
©2022 by Yamaha Motor Co., Ltd.
1st edition, November 2022
All rights reserved.
Any reprinting or unauthorized use
without the written permission of
Yamaha Motor Co., Ltd.
is expressly prohibited.
Printed in Japan.

FOREWORD

This Parts Catalogue is related to the parts for the model(s) on the cover page. When you are ordering replacement parts, please refer to this Parts Catalogue and quote both part numbers and part names correctly.

1. Modifications or additions which have been made after the issue of the Parts Catalogue will be announced in the Parts News.
   It is advisable that you make the necessary corrections to the Parts Catalogue according to the Parts News.

2. Abbreviations
   The following abbreviations are used in this Parts Catalogue.

   "UR" Use specified parts number.

   "UN" Use as many as needed.

   "AP" Alternate Parts

   "LM" Locally Made (Parts need to be ordered locally)

   "F#" Frame No. (Applicable machine No.)

   "O/S" Over Size

3. The number of components for assembly
   - Parts, which are to be supplied in an assembly, are listed with a dot (.) in front of the part name as shown below.
   - The numeral appearing to the right of each component part indicates the quantity of parts for each assembly unit.

PART NO.	DESCRIPTION	Q'TY	REMARKS
2F5–83310–60	FRONT FLASHER LIGHT ASSY	2	
115–83311–60	.BULB (6V–18W)	1	

4. Applicable colours of graphics are represented in the "REMARKS" as shown below.

PART NO.	DESCRIPTION	Q'TY	REMARKS
2N4–24110–00–X5	FUEL TANK COMP.	2	MXR
3J1–24240–10	.GRAPHIC, FUEL TANK	1	FOR MXR

5. Note that the illustrations for reference in finding parts numbers are not to be used for assembling. When assembling, please use the applicable service manual.

6. The asterisk (*) before a reference number indicates modified items after the first edition.

7. Applicable Serial No.

Frame Serial No.

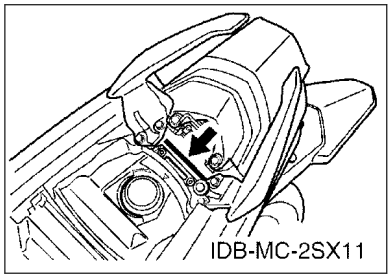

Engine Serial No.

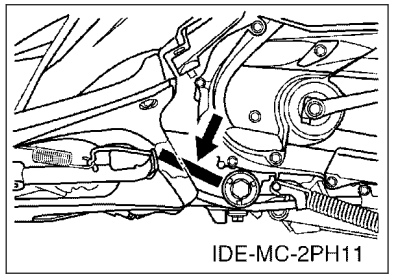

8. Applicable Colour Code (The (*) mark shows Model colour.)

Abbreviation	Colour Name	Colour Code
CS6(*)	CYAN SOLID 6	1754
PGD(*)	PASTEL DARK GRAY	003E
SMX	BLACK METALLIC X	0903
VRC1(*)	VIVID RED COCKTAIL 1	0121
YB	YAMAHA BLACK	0033

9. Applicable Starting Serial No.

Frame Serial No.

Serial No.	Name Of Q'ty Column	Model Code

Engine Serial No.

Serial No.	Name Of Q'ty Column	Model Code

CONTENTS

ENGINE

CYLINDER.....1
CRANKSHAFT & PISTON.....2
VALVE.....3
CAMSHAFT & CHAIN.....4
AIR SHROUD & FAN.....5
OIL PUMP.....6
INTAKE.....7
EXHAUST.....9
CRANKCASE.....10
CRANKCASE COVER 1.....12
STARTER.....13
CLUTCH.....14
TRANSMISSION.....16

CHASSIS

FRAME.....17
FENDER.....18
SIDE COVER.....19
REAR SUSPENSION.....21
STEERING.....22
FUEL TANK.....24
SEAT.....25
FRONT WHEEL.....26
FRONT BRAKE CALIPER.....27
REAR WHEEL.....28
STEERING HANDLE & CABLE.....29
FRONT MASTER CYLINDER.....31
STAND & FOOTREST.....32
LEG SHIELD.....34
GENERATOR.....36
STARTING MOTOR.....37
FLASHER LIGHT.....38
METER.....40
HEADLIGHT.....41
TAILLIGHT.....42
HANDLE SWITCH & LEVER.....43
ELECTRICAL 1.....44
ELECTRICAL 2.....45

INDEX

NUMERICAL INDEX.....46

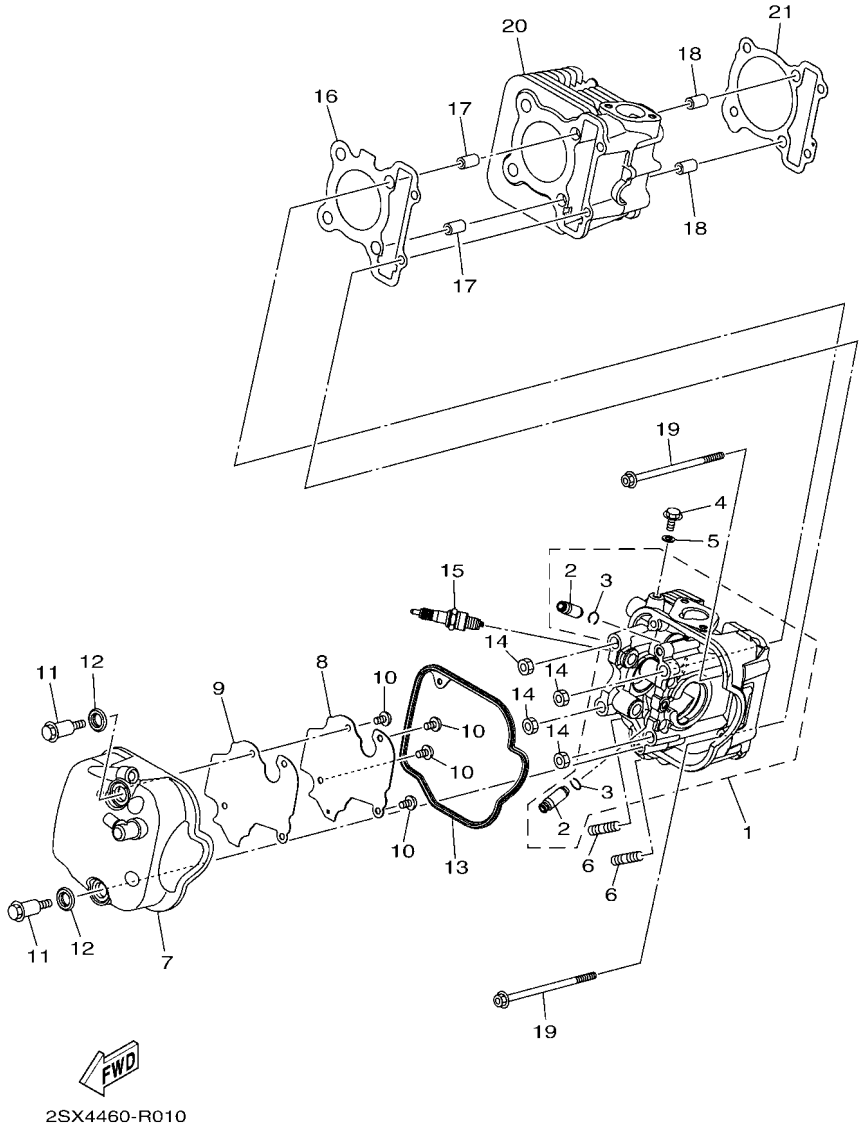

FIG. 1 CYLINDER

REF. NO.	PART NO.	DESCRIPTION	B926					REMARKS
1	B92–E1102–00	CYLINDER HEAD ASSY	1					
2	1DR–E1133–10	.GUIDE, VALVE 1	2					
3	93440–10153	.CIRCLIP	2					
4	95E32–06010	BOLT, FLANGE DEEP RECESS	1					
5	90430–06803	GASKET	1					
6	95612–08618	BOLT, STUD	2					
7	2PH–E1191–00	COVER, CYLINDER HEAD 1	1					UR Either can use
	2BM–E1191–00	COVER, CYLINDER HEAD 1	1					UR Either can use
8	2PH–E1165–00	PLATE, BREATHER	1					
9	2PH–E1169–00	GASKET, BREATHER COVER	1					UR Either can use
	2PH–E1169–10	GASKET, BREATHER COVER	1					UR Either can use
10	90149–05801	SCREW	4					
11	2PH–E119E–10	BOLT, COVER HEAD	2					
12	2BM–E111G–00	RUBBER, MOUNT 1	2					
13	2BM–E1193–00	GASKET, HEAD COVER 1	1					
14	95302–08600	NUT, HEXAGON	4					
15	94700–00372	PLUG, SPARK (NGK CR6HSA)	1					
16	2BL–E1181–00	GASKET, CYLINDER HEAD 1	1					
17	99530–10114	PIN, DOWEL	2					
18	99530–10114	PIN, DOWEL	2					
19	90110–06868	BOLT, HEXAGON SOCKET HEAD	2					
20	2PH–E1311–10	CYLINDER 1	1					
21	2PH–E1351–10	GASKET, CYLINDER	1					

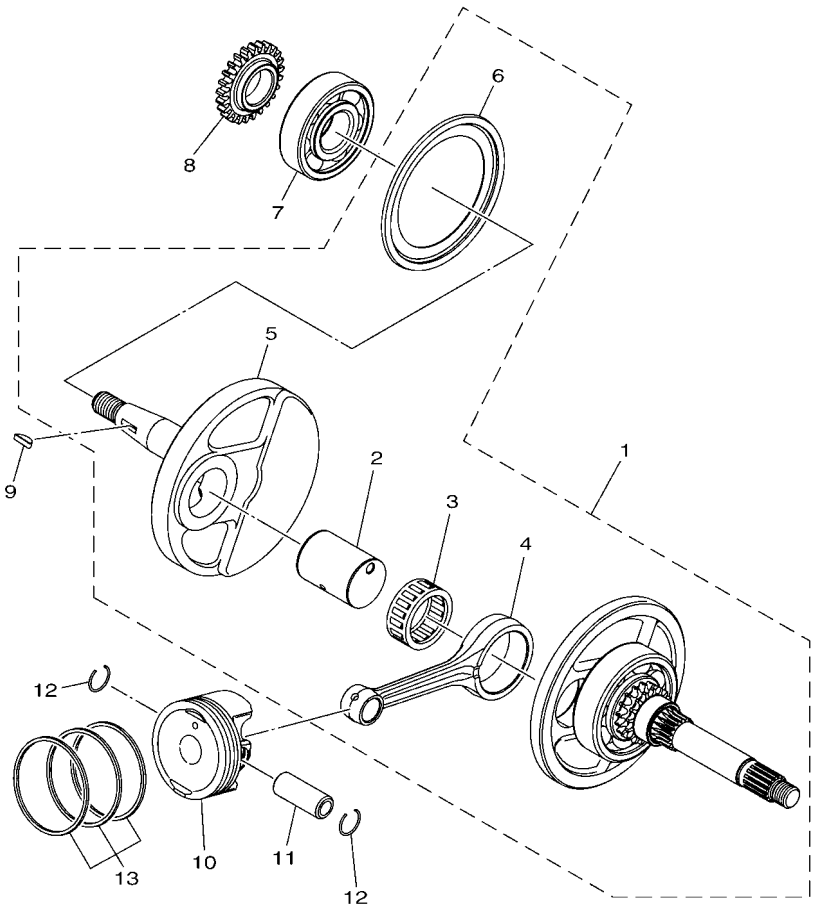

BJ81460-R020

FIG. 2 CRANKSHAFT & PISTON

REF. NO.	PART NO.	DESCRIPTION	B926					REMARKS
1	B92–E1400–00	CRANKSHAFT ASSY	1					UR Either can use
	B92–E1400–10	CRANKSHAFT ASSY	1					UR Either can use
	B92–E1400–20	CRANKSHAFT ASSY	1					UR Either can use
2	2BM–E1681–10	.PIN, CRANK 1	1					
3	93310–528YP	.BEARING	1					
4	2PH–E1651–20	.ROD, CONNECTING	1					
5	2PH–E1422–10	.CRANK 2	1					UR B92-E1400-00
	2PH–E1422–20	.CRANK 2	1					UR B92-E1400-10
	B92–E1422–00	.CRANK 2	1					UR B92-E1400-20
6	5LW–E3452–00	.COVER, ROTOR FILTER	1					
7	93306–372X5	BEARING	1					
8	2BM–E3324–10	GEAR, PUMP DRIVE	1					
9	90280–03017	KEY, WOODRUFF	1					
10	2PH–E1631–00	PISTON (STD)	1					
11	2PH–E1633–00	PIN, PISTON	1					
12	93450–14088	CIRCLIP	2					
13	2PH–E1603–10	PISTON RING SET (STD)	1					

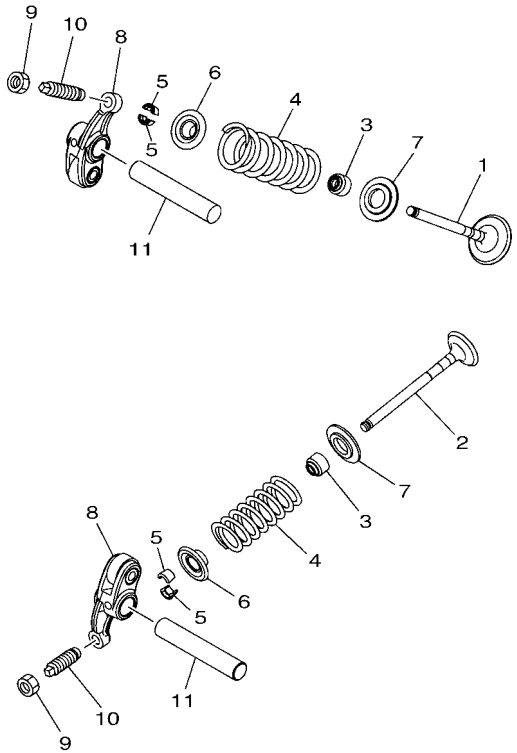

2BM1422-P030

FIG. 3 VALVE

REF. NO.	PART NO.	DESCRIPTION	B926					REMARKS
1	2PH–E2111–00	VALVE, INTAKE	1					
2	2PH–E2121–10	VALVE, EXHAUST	1					
3	54P–E2119–00	SEAL, VALVE STEM	2					
4	54P–E2113–00	SPRING, VALVE INNER	2					
5	5TL–E2118–00	LOCK, VALVE SPRING RETAINER	4					
6	54P–E2117–00	RETAINER, VALVE SPRING	2					UR Either can use
	1KP–E2117–00	RETAINER, VALVE SPRING	2					UR Either can use
7	2PH–E2126–00	SEAT, VALVE SPRING 2	2					
8	2PH–E2151–01	ARM, VALVE ROCKER	2					
9	90170–05803	NUT	2					
10	33S–E2159–01	SCREW, VALVE ADJUSTING	2					
11	2PH–E2146–00	SHAFT, ROCKER	2					

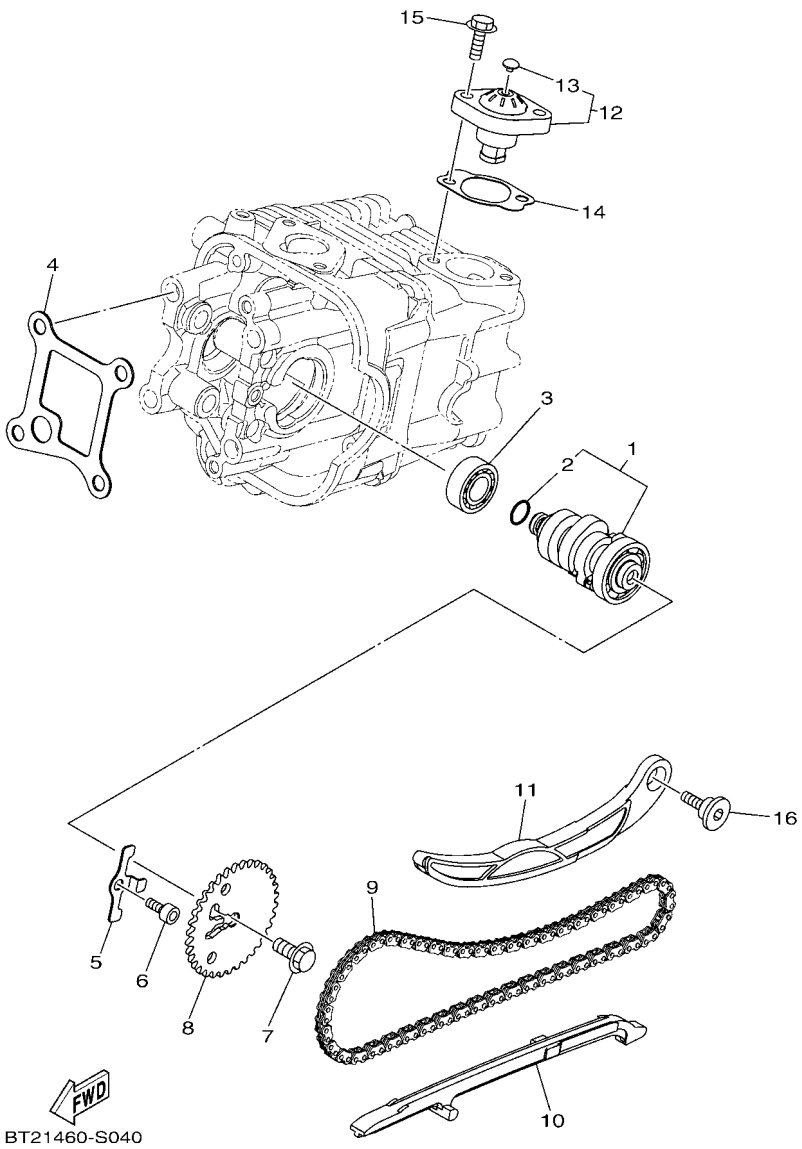

FIG. 4 CAMSHAFT & CHAIN

REF. NO.	PART NO.	DESCRIPTION	B926					REMARKS
1	2PH–E2170–00	CAMSHAFT ASSY 1	1					
2	93210–09806	.O-RING	1					
3	93306–001YE	BEARING	1					UR Either can use
	93306–001X3	BEARING	1					UR Either can use
4	2PH–E111F–00	PLATE	1					
5	2PH–E112F–00	PLATE 2	1					
6	91312–06012	BOLT, HEXAGON SOCKET HEAD	1					
7	90105–07801	BOLT, FLANGE	1					
8	2PH–E2176–01	SPROCKET, CAM CHAIN (34T)	1					
9	94568–J7092	CHAIN	1					
10	54P–E2231–00	GUIDE, STOPPER 1	1					
11	2PH–E2241–00	GUIDE, STOPPER 2	1					
12	2BM–E2210–20	TENSIONER ASSY, CAM CHAIN	1					
13	5MX–E2222–00	.PLUG	1					
14	2PH–E2213–10	GASKET, TENSIONER CASE	1					
15	95E32–06020	BOLT, FLANGE DEEP RECESS	2					
16	54P–E2228–00	BOLT	1					UR Either can use
	52B–E2228–00	BOLT	1					UR Either can use

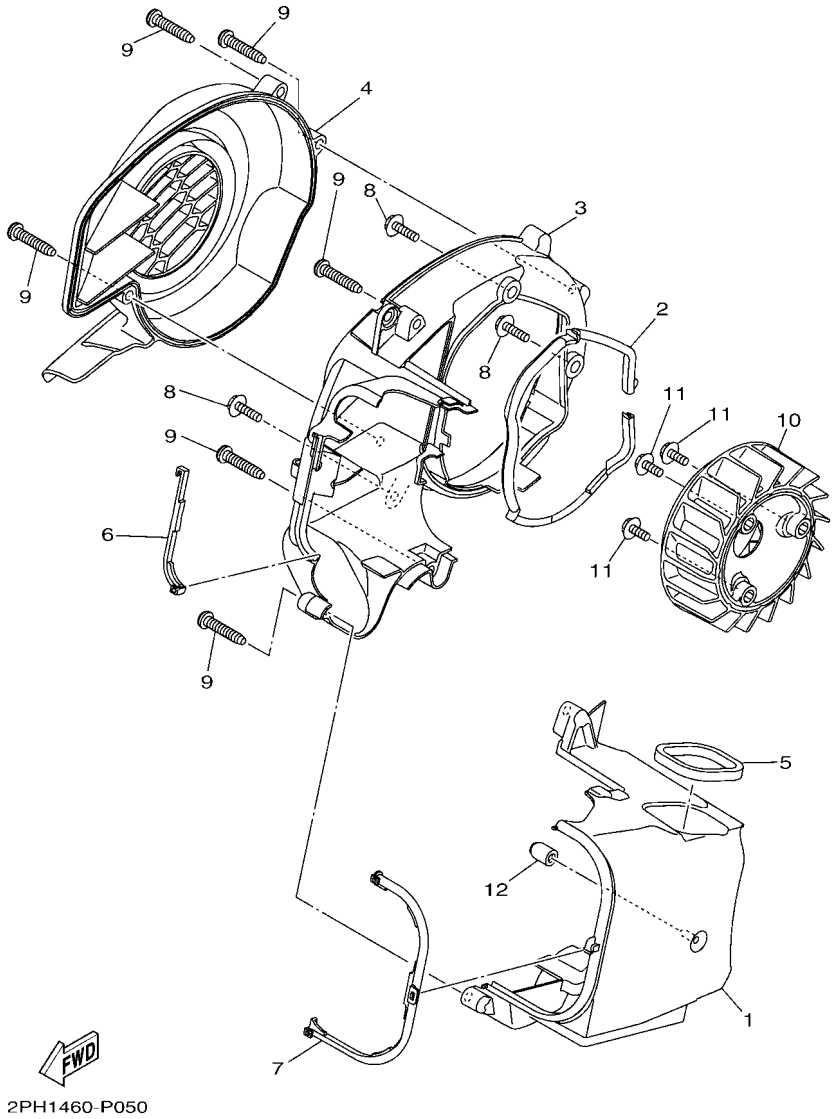

FIG. 5 AIR SHROUD & FAN

REF. NO.	PART NO.	DESCRIPTION	B926					REMARKS
1	2PH–E2651–00	AIR SHROUD, CYLINDER 1	1					
2	2PH–E2658–00	DAMPER, AIR SHROUD 1	1					
3	2PH–E2652–00	AIR SHROUD, CYLINDER 2	1					
4	2PH–E2653–00	AIR SHROUD, CYLINDER 3	1					
5	90520–05819	DAMPER, PLATE	1					
6	2PH–E2659–10	DAMPER, AIR SHROUD 2	1					UR Either can use
	2SX–E2659–10	DAMPER, AIR SHROUD 2	1					UR Either can use
7	2PH–E2668–10	DAMPER, AIR SHROUD 3	1					
8	95E32–06020	BOLT, FLANGE DEEP RECESS	3					
9	97702–60530	SCREW, TAPPING	6					
10	2PH–E2611–10	FAN	1					
11	95D32–06016	BOLT, FLANGE DEEP RECESS	3					
12	5LW–E3569–00	PLUG, BLIND	1					

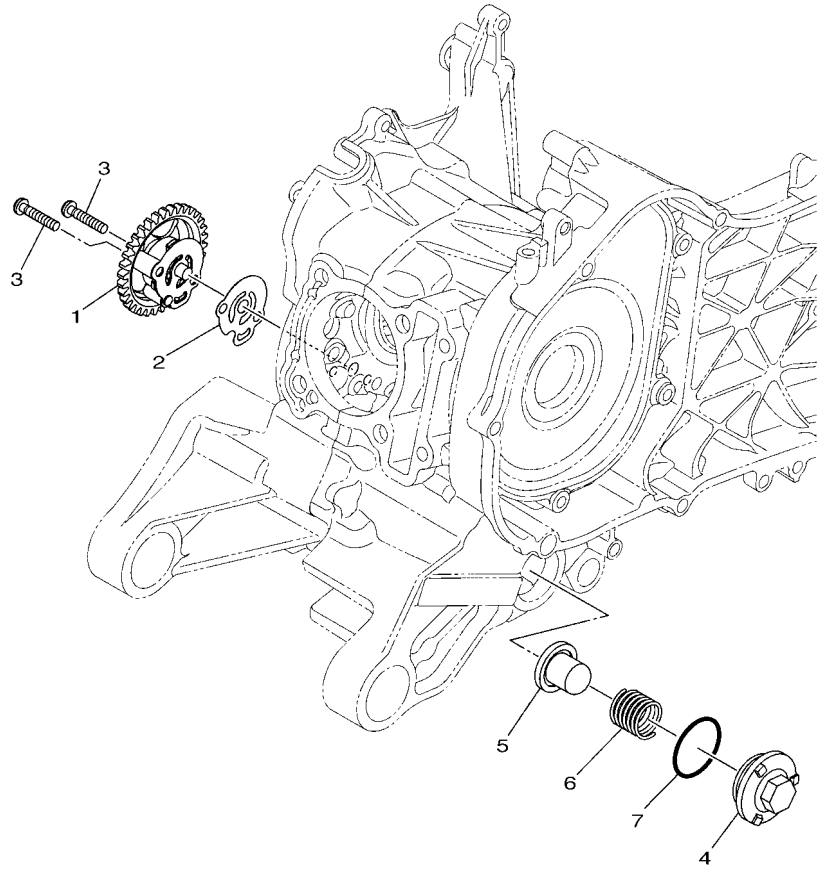

2BM1422-P050

FIG. 6 OIL PUMP

REF. NO.	PART NO.	DESCRIPTION	B926					REMARKS
1	2PH–E3300–10	OIL PUMP ASSY	1					
2	BF4–E3475–00	GASKET	1					
3	98502–05020	SCREW, PAN HEAD	2					
4	54P–E5351–01	STRAIGHT SCREW BOLT	1					
5	54P–E3411–00	STRAINER, OIL	1					
6	90501–16004	SPRING, COMPRESSION	1					
7	93210–29800	O-RING	1					

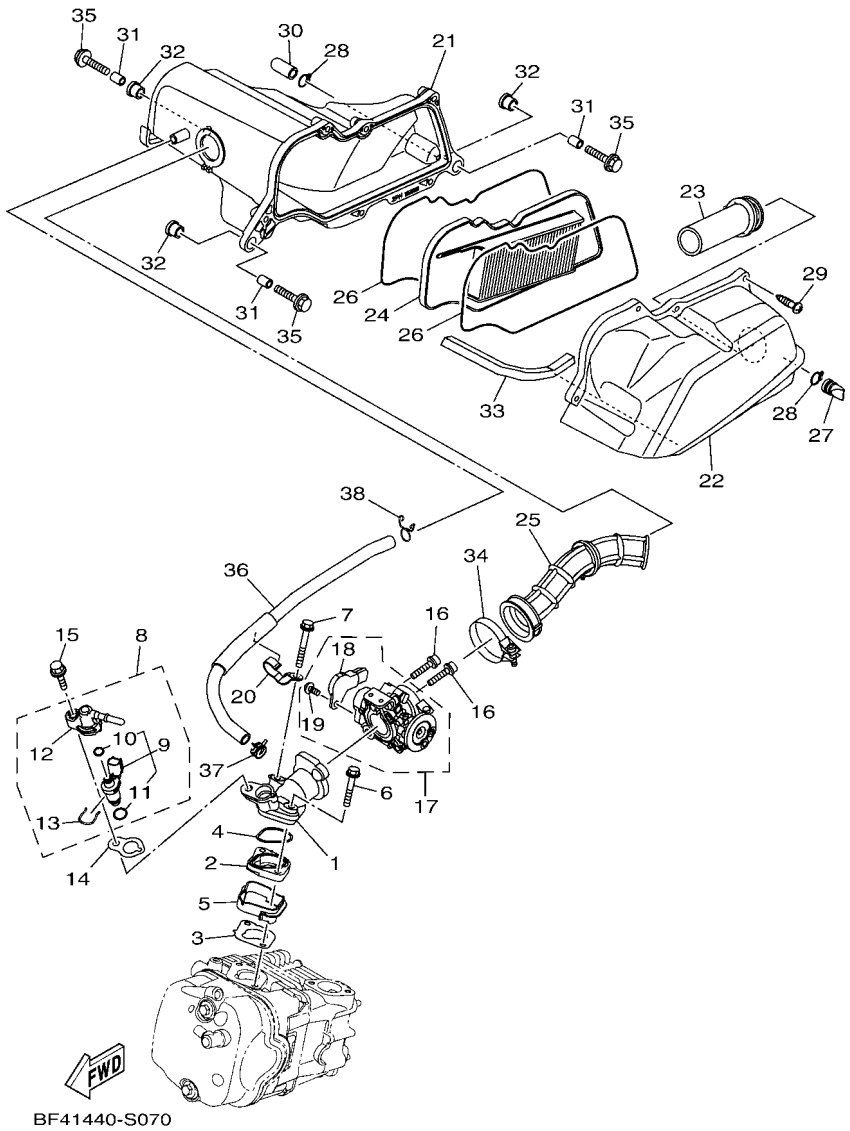

FIG. 7 INTAKE

REF. NO.	PART NO.	DESCRIPTION	B926					REMARKS
1	2PH–E3585–10	MANIFOLD	1					
2	2PH–E3595–00	JOINT	1					
3	2PH–E3556–10	GASKET, MANIFOLD	1					
4	93210–35883	O-RING	1					
5	2PH–E3593–01	DAMPER	1					
6	95D32–06035	BOLT, FLANGE DEEP RECESS	1					
7	95D32–06045	BOLT, FLANGE DEEP RECESS	1					
8	2PH–E3770–10	INJECTOR ASSY	1					
9	2PH–E3761–10	.INJECTOR	1					
10	54P–E4147–00	..O-RING	1					
11	5CA–E4147–00	..O-RING	1					
12	54P–E3938–00	.PIPE	1					
13	54P–E4137–00	.CLIP	1					
14	2PH–E3557–10	GASKET	1					
15	95D32–06025	BOLT, FLANGE DEEP RECESS	1					
16	90110–06846	BOLT, HEXAGON SOCKET HEAD	2					
17	2PH–E3750–01	THROTTLE BODY ASSY	1					
18	2PH–H5885–01	.THROTTLE SENSOR ASSY	1					
19	1PM–14216–00	.SCREW	1					
20	2PH–E4146–00	PLATE	1					
21	2PH–E4411–00	CASE, AIR CLEANER 1	1					
22	2PH–E4412–00	CAP, CLEANER CASE 1	1					
23	2PH–E4437–00	DUCT	1					
24	2PH–E4450–20	ELEMENT ASSY, AIR CLEANER	1					
25	2PH–E4453–00	JOINT, AIR CLEANER 1	1					
26	2PH–E4452–00	SEAL	2					
27	5TP–E443G–00	PIPE, DRAIN 2	1					

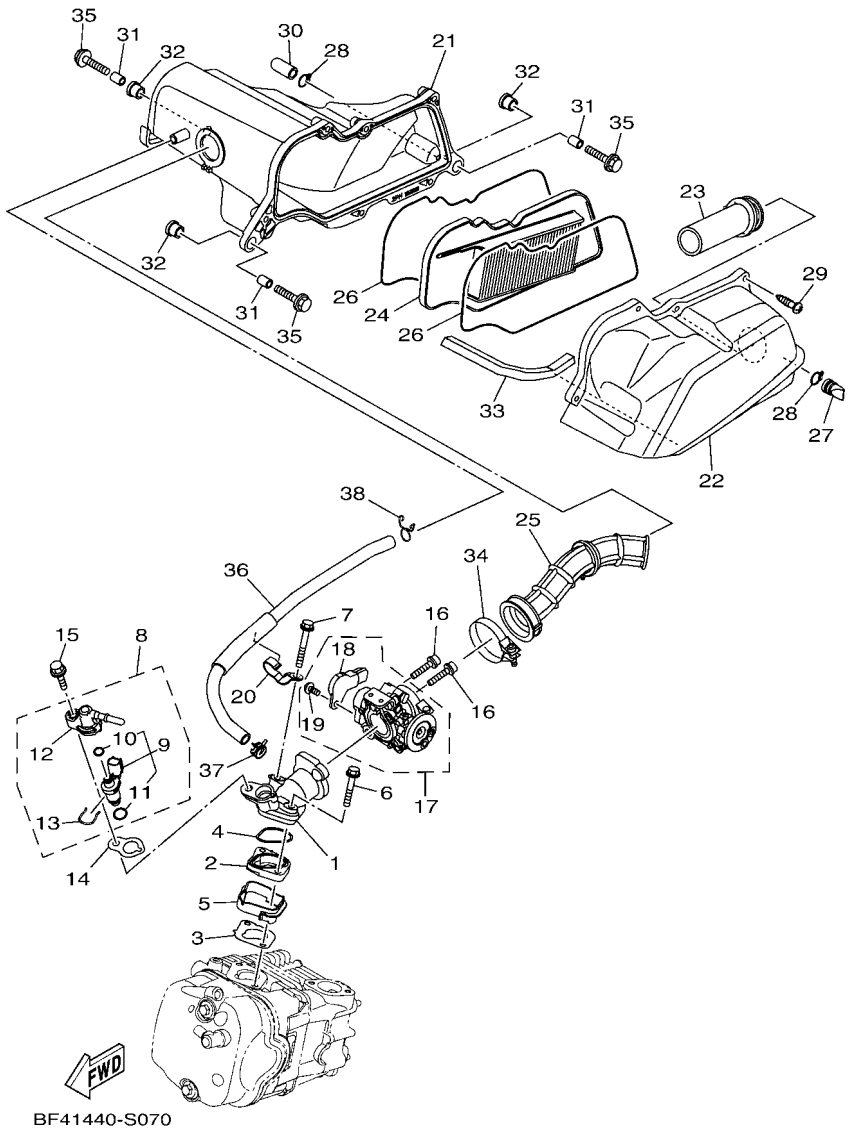

FIG. 7 INTAKE

REF. NO.	PART NO.	DESCRIPTION	B926					REMARKS
28	90467–12807	CLIP	2					
29	97707–50025	SCREW, TAPPING	6					
30	5TL–E443E–00	PIPE, DRAIN	1					
31	90387–064W3	COLLAR	3					
32	90480–13013	GROMMET	3					
33	90520–10825	DAMPER, PLATE	1					
34	90450–46803	HOSE CLAMP ASSY	1					
35	95D32–06025	BOLT, FLANGE DEEP RECESS	3					
36	2PH–E1166–11	PIPE, BREATHER 1	1					UR Either can use
	2SX–E1166–10	PIPE, BREATHER 1	1					UR Either can use
37	90467–13808	CLIP	1					
38	90467–13858	CLIP	1					

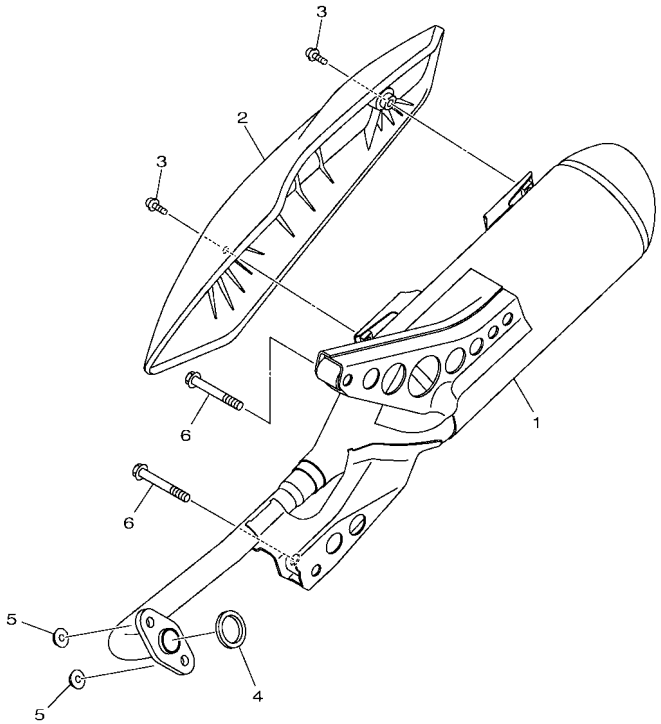

B926440-Y080

FIG. 8 EXHAUST

REF. NO.	PART NO.	DESCRIPTION	B926					REMARKS
1	BES–E4711–00	MUFFLER 1	1					
2	BES–E4718–00	PROTECTOR, MUFFLER 1	1					
3	90111–06811	BOLT, HEXAGON SOCKET BUTTON	2					
4	B92–E4613–00	GASKET, EXHAUST PIPE	1					
5	95702–08500	NUT, FLANGE	2					
6	95D32–08055	BOLT, FLANGE DEEP RECESS	2					

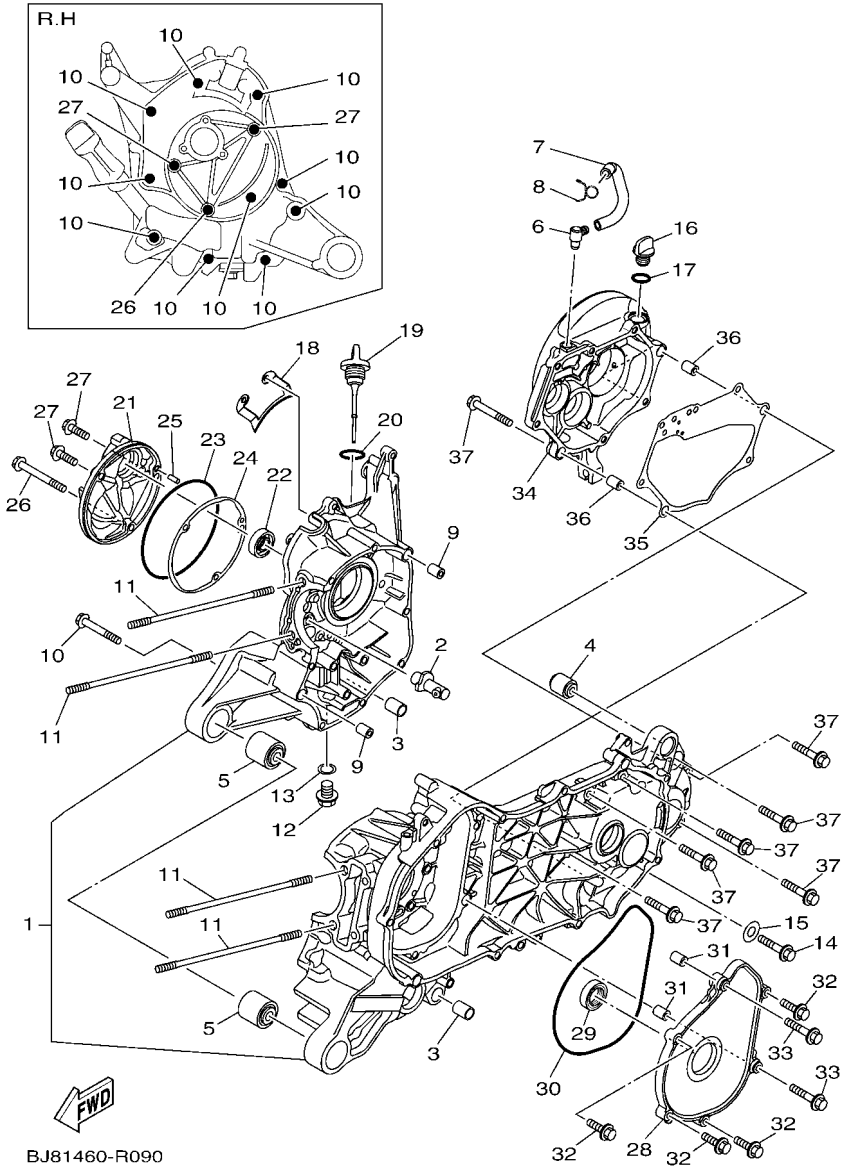

FIG. 9 CRANKCASE

REF. NO.	PART NO.	DESCRIPTION	B926					REMARKS
1	2PH–E5150–00	CRANKCASE ASSY	1					UR Either can use
	B92–E5150–00	CRANKCASE ASSY	1					UR Either can use
2	2PH–E5155–01	NOZZLE 3	1					
3	1GC–F7121–00	BUSH	2					UR Either can use
	54P–F7121–00	BUSH	2					UR Either can use
4	5MX–F2216–00	BUSH, REAR SHOCK ABSORBER	1					UR Either can use
	90388–08803	DAMPER	1					UR Either can use
5	90388–10805	DAMPER	2					
6	54P–E5371–00	BREATHER	1					
7	2PH–E5373–00	PIPE, BREATHER	1					UR Either can use
	2SX–E5373–00	PIPE, BREATHER	1					UR Either can use
8	90467–11825	CLIP	1					
9	99530–10114	PIN, DOWEL	2					
10	95E32–06060	BOLT, FLANGE DEEP RECESS	10					
11	90116–08843	BOLT, STUD	4					
12	90340–12816	BOLT, STRAIGHT SCREW	1					
13	90430–12803	GASKET	1					
14	95812–06040	BOLT, FLANGE	1					
15	90430–06803	GASKET	1					
16	5LW–E5363–00	PLUG, OIL	1					
17	93210–148H8	O-RING	1					
18	2PH–E5113–00	PLATE	1					
19	2PH–E5362–10	PLUG, OIL LEVEL	1					
20	5LW–E3769–00	O-RING	1					
21	2PH–E5417–00	COVER, CAP	1					
22	93102–19814	OIL SEAL	1					UR Either can use
	93102–19817	OIL SEAL	1					UR Either can use

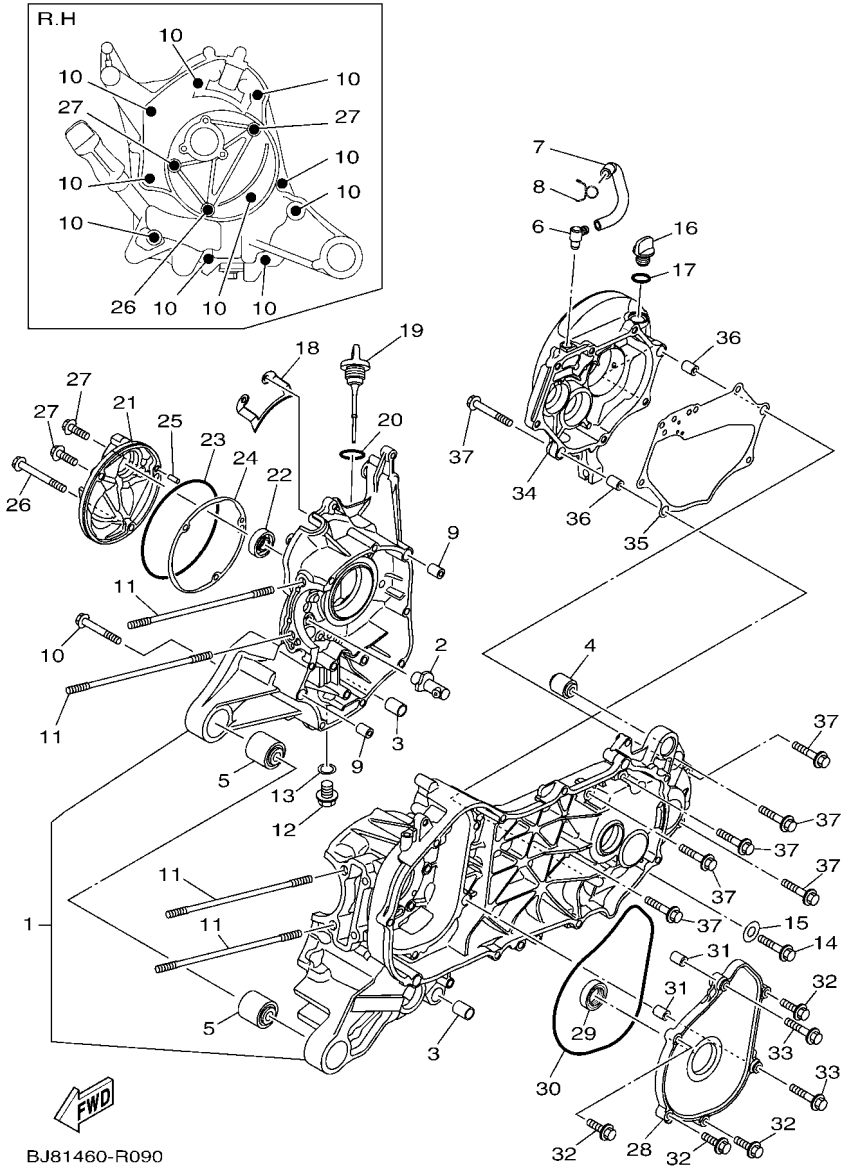

FIG. 9 CRANKCASE

REF. NO.	PART NO.	DESCRIPTION	B926					REMARKS
23	93211–07800	O-RING	1					
24	2PH–E5453–10	GASKET	1					
25	99480–05010	PIN	1					
26	95E32–06070	BOLT, FLANGE DEEP RECESS	1					
27	95E32–06020	BOLT, FLANGE DEEP RECESS	2					
28	2PH–E5423–01	COVER 2	1					
29	93102–25816	OIL SEAL	1					UR Either can use
	93102–25819	OIL SEAL	1					UR Either can use
30	93211–47801	O-RING	1					
31	99530–10114	PIN, DOWEL	2					
32	95E32–06025	BOLT, FLANGE DEEP RECESS	4					
33	95E32–06035	BOLT, FLANGE DEEP RECESS	2					
34	2PH–E5421–02	COVER, CRANKCASE 2	1					
35	2PH–E5461–10	GASKET, CRANKCASE COVER 2	1					
36	99530–10114	PIN, DOWEL	2					
37	95E32–06035	BOLT, FLANGE DEEP RECESS	7					

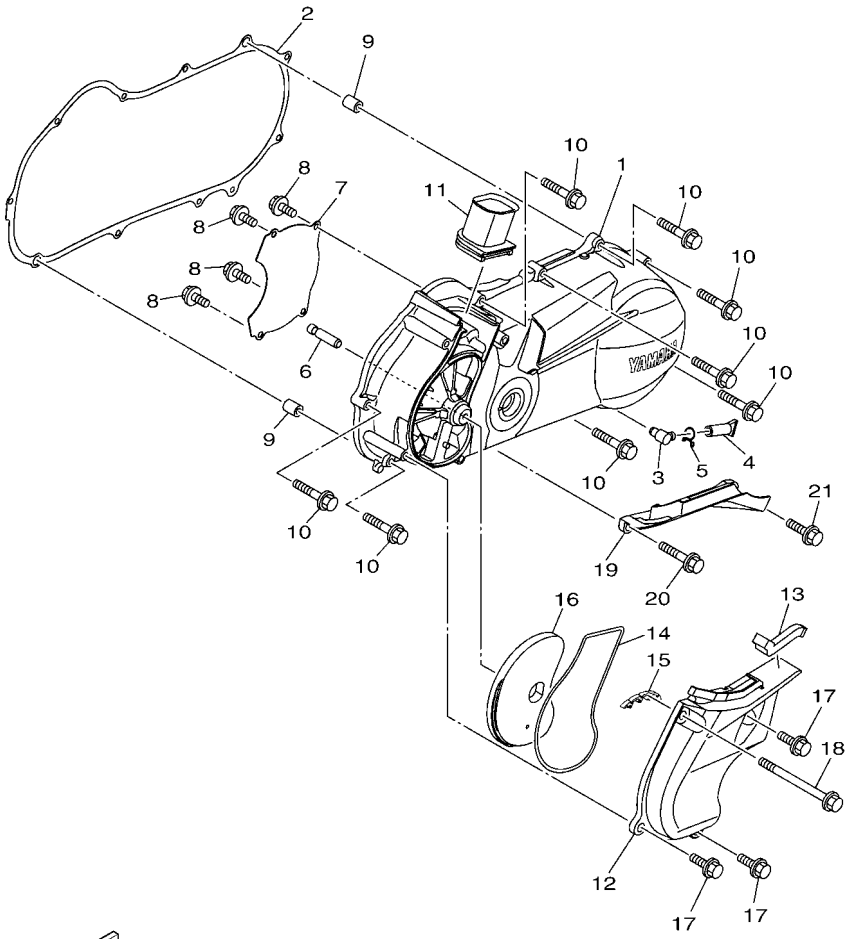

2PH1460-P100

FIG. 10 CRANKCASE COVER 1

REF. NO.	PART NO.	DESCRIPTION	B926					REMARKS
1	B92–E5411–00	COVER, CRANKCASE 1	1					
2	2PH–E5451–10	GASKET, CRANKCASE COVER 1	1					
3	54P–E5371–00	BREATHER	1					
4	4ST–E443E–00	PIPE, DRAIN	1					
5	90467–110A3	CLIP	1					
6	5LW–15659–01	SHAFT	1					UR Either can use
	1GC–E5659–00	SHAFT	1					UR Either can use
7	2PH–E5191–10	PLATE	1					
8	95E32–06010	BOLT, FLANGE DEEP RECESS	4					
9	99530–10114	PIN, DOWEL	2					
10	95E32–06035	BOLT, FLANGE DEEP RECESS	8					
11	2PH–E5473–00	DUCT, AIR	1					
12	2PH–E5471–00	DUCT, AIR	1					
13	2PH–E5316–00	DAMPER 1	1					
14	2PH–E5472–00	SEAL, AIR DUCT	1					
15	2PH–E5495–00	RUBBER SEAL	1					
16	2PH–E5407–00	ELEMENT 1	1					
17	95D32–06020	BOLT, FLANGE DEEP RECESS	3					
18	95D32–06090	BOLT, FLANGE DEEP RECESS	1					
19	2PH–E5413–00	COVER	1					
20	95E32–06045	BOLT, FLANGE DEEP RECESS	1					
21	95E32–06020	BOLT, FLANGE DEEP RECESS	1					

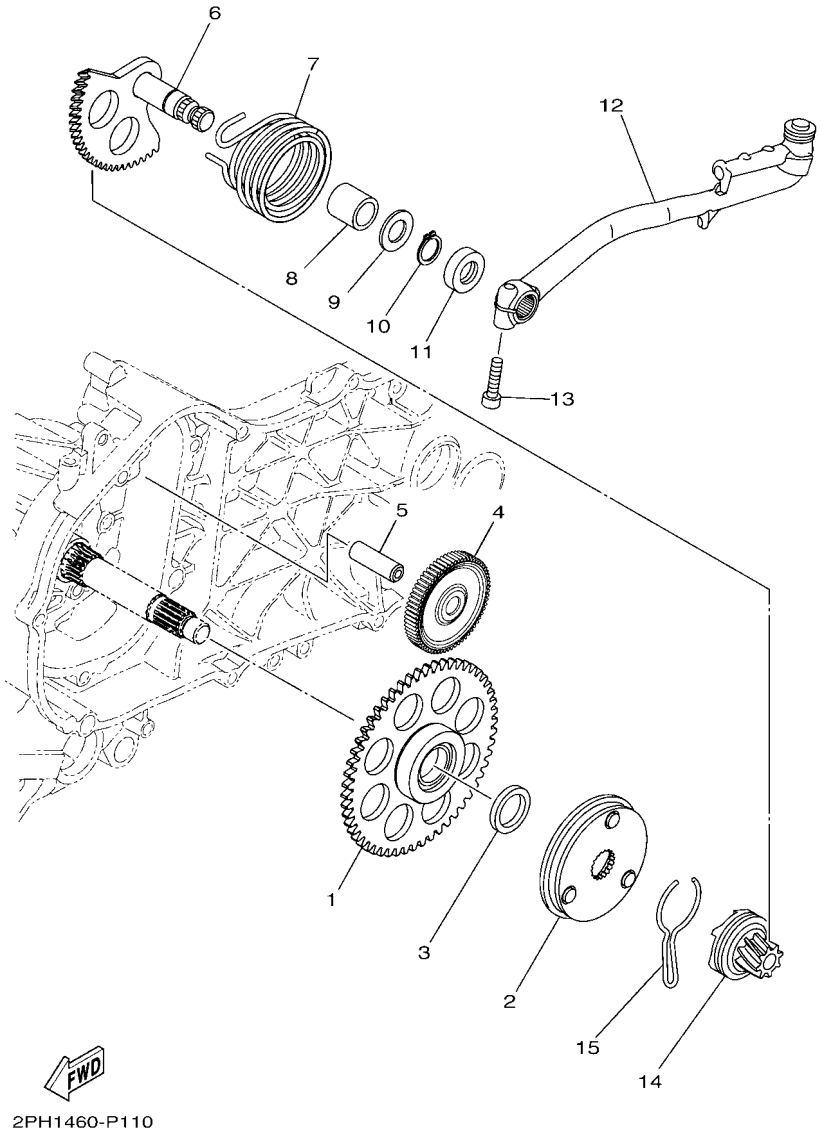

FIG. 11 STARTER

REF. NO.	PART NO.	DESCRIPTION	B926					REMARKS
1	2PH–E5520–20	STARTER WHEEL ASSY	1					
2	2PH–E5570–00	STARTER CLUTCH ASSY	1					UR Either can use
	2PH–E5570–11	STARTER CLUTCH ASSY	1					UR Either can use
3	44D–E5598–00	COLLAR	1					UR Either can use
	1GC–E5598–00	COLLAR	1					UR Either can use
4	2BM–E5512–00	GEAR, IDLER 1	1					
5	44D–E5521–00	SHAFT 1	1					UR Either can use
	1GC–E5521–00	SHAFT 1	1					UR Either can use
6	2PH–E5601–10	KICK SHAFT ASSY	1					
7	90508–32768	SPRING, TORSION	1					
8	90380–15811	BUSH, SOLID	1					
9	90201–154E8	WASHER, PLATE (T=1.0)	1					
10	99009–15400	CIRCLIP	1					
11	93102–15801	OIL SEAL	1					
12	2BL–E5620–10	KICK CRANK ASSY	1					
13	91332–06025	BOLT	1					
14	2PH–E5630–00	KICK PINION ASSY	1					
15	5MX–E5673–00	CLIP	1					

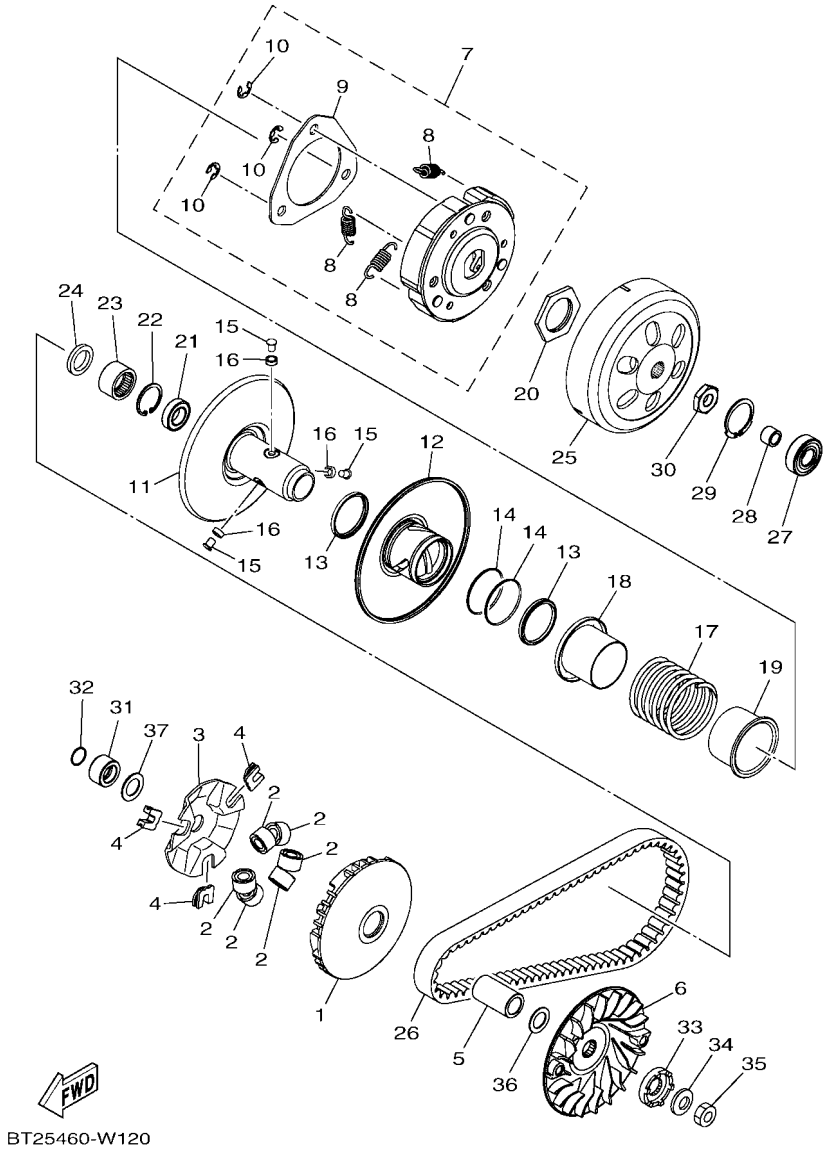

FIG. 12 CLUTCH

REF. NO.	PART NO.	DESCRIPTION	B926					REMARKS
1	B5D–E7620–00	PRIMARY SLIDING SHEAVE COMP.	1					
2	2SX–E7632–10	WEIGHT	6					
3	2PH–E7623–00	CAM	1					
4	B5D–E7653–00	SLIDER	3					
5	B5D–E7674–00	COLLAR, GUIDE	1					
6	2SX–E7611–11	SHEAVE, PRIMARY FIXED	1					
7	BJ8–E6620–00	CLUTCH CARRIER ASSY	1					
8	2PH–E6626–00	.SPRING, CLUTCH WEIGHT 1	3					
9	2PH–E6523–00	.PLATE, WEIGHT THRUST	1					
10	2PH–E6819–00	.CIRCLIP, CLUTCH	3					
11	BJ8–E7660–10	SECONDARY FIXED SHEAVE COMP.	1					
12	BJ8–E7670–00	SECONDARY SLIDING SHEAVE	1					
13	B5D–E7465–00	SEAL	2					
14	2PH–E7465–10	SEAL	2					
15	2PH–E7664–00	PIN, GUIDE	3					
16	2PH–E7674–10	COLLAR, GUIDE	3					
17	B5D–E7683–00	SPRING, SECONDARY	1					
18	2PH–E7684–00	SEAT, SECONDARY SPRING	1					
19	2PH–E7644–00	SEAT,SPRING	1					
20	2PH–E7668–00	NUT	1					
21	B5D–E7678–00	BEARING	1					
22	2PH–E5744–00	CIRCLIP	1					
23	B5D–E7678–10	BEARING	1					
24	B5D–E7465–30	SEAL	1					
25	B5D–E6611–00	CLUTCH HOUSING COMP.	1					
26	2PH–E7641–00	V-BELT	1					
27	93306–252YB	BEARING	1					

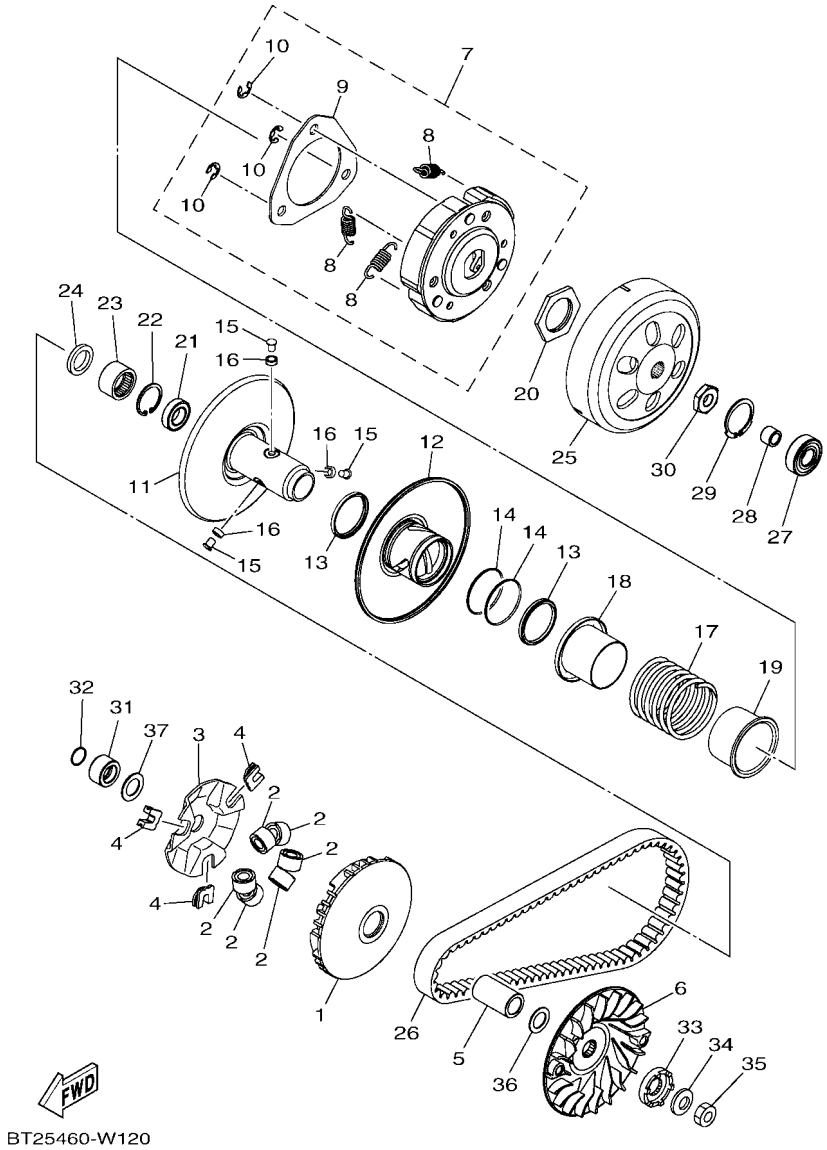

FIG. 12 CLUTCH

REF. NO.	PART NO.	DESCRIPTION	B926					REMARKS
28	90380–10803	BUSH, SOLID	1					
29	99009–35700	CIRCLIP	1					
30	90170–12803	NUT	1					
31	2PH–E7645–10	COLLAR	1					
32	93210–16805	O-RING	1					
33	5MX–E5657–00	CLUTCH, ONEWAY	1					
34	90208–12808	WASHER, CONICAL SPRING	1					
35	90170–12800	NUT	1					
36	90201–15700	WASHER, PLATE	1					
37	90201–16815	WASHER, PLATE	1					

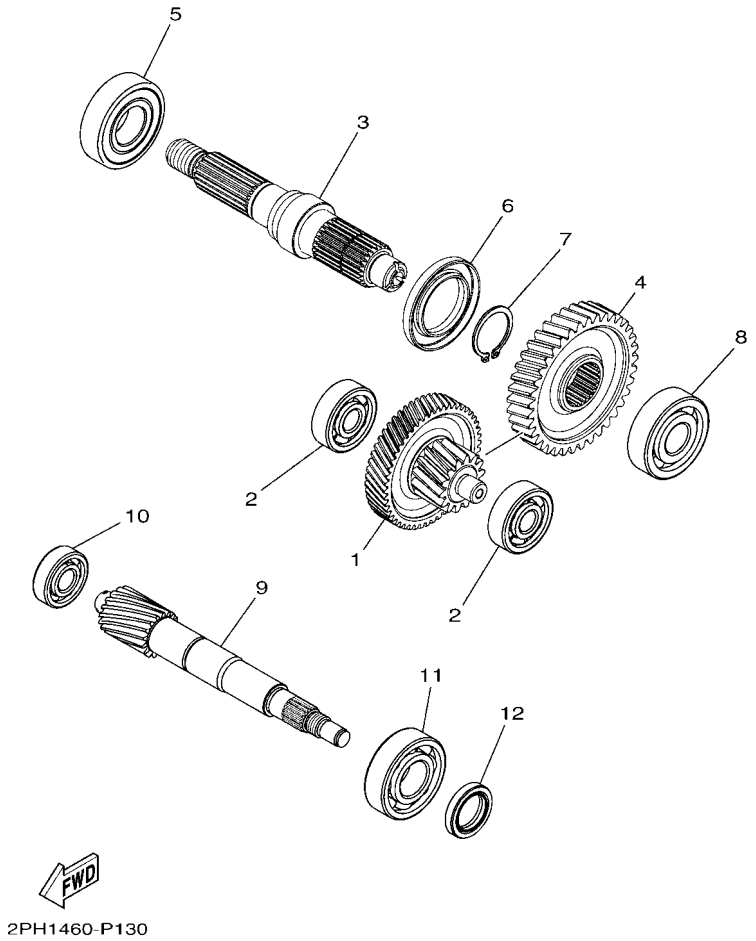

FIG. 13 TRANSMISSION

REF. NO.	PART NO.	DESCRIPTION	B926					REMARKS
1	2PH–E7410–00	MAIN AXLE COMP. (12T/50T)	1					UR Either can use
	2PH–E7410–10	MAIN AXLE COMP. (12T/50T)	1					UR Either can use
2	93306–351Y5	BEARING	2					
3	2PH–E7421–00	AXLE, DRIVE	1					UR Either can use
	2PH–E7421–10	AXLE, DRIVE	1					UR Either can use
	2PH–E7421–40	AXLE, DRIVE	1					UR Either can use
	2PH–E7421–50	AXLE, DRIVE	1					UR Either can use
4	2PH–E7211–00	GEAR, 1ST WHEEL (39T)	1					UR Either can use
	2PH–E7211–10	GEAR, 1ST WHEEL (39T)	1					UR Either can use
	2PH–E7211–50	GEAR, 1ST WHEEL (39T)	1					UR Either can use
5	93306–272YA	BEARING	1					
6	93102–32801	OIL SEAL	1					UR Either can use
	93102–32809	OIL SEAL	1					UR Either can use
7	99009–25400	CIRCLIP	1					
8	93306–303YN	BEARING	1					UR Either can use
	93306–303YS	BEARING	1					UR Either can use
9	2PH–E6111–00	GEAR, PRIMARY DRIVE (16T)	1					UR Either can use
	2PH–E6111–10	GEAR, PRIMARY DRIVE (16T)	1					UR Either can use
	2PH–E6111–20	GEAR, PRIMARY DRIVE (16T)	1					UR Either can use
	2PH–E6111–30	GEAR, PRIMARY DRIVE (16T)	1					UR Either can use
10	93306–201YR	BEARING	1					UR Either can use
	93306–201YS	BEARING	1					UR Either can use
11	93306–204XT	BEARING	1					UR Either can use
	93306–204XV	BEARING	1					UR Either can use
12	93102–20815	OIL SEAL	1					UR Either can use
	93102–20816	OIL SEAL	1					UR Either can use

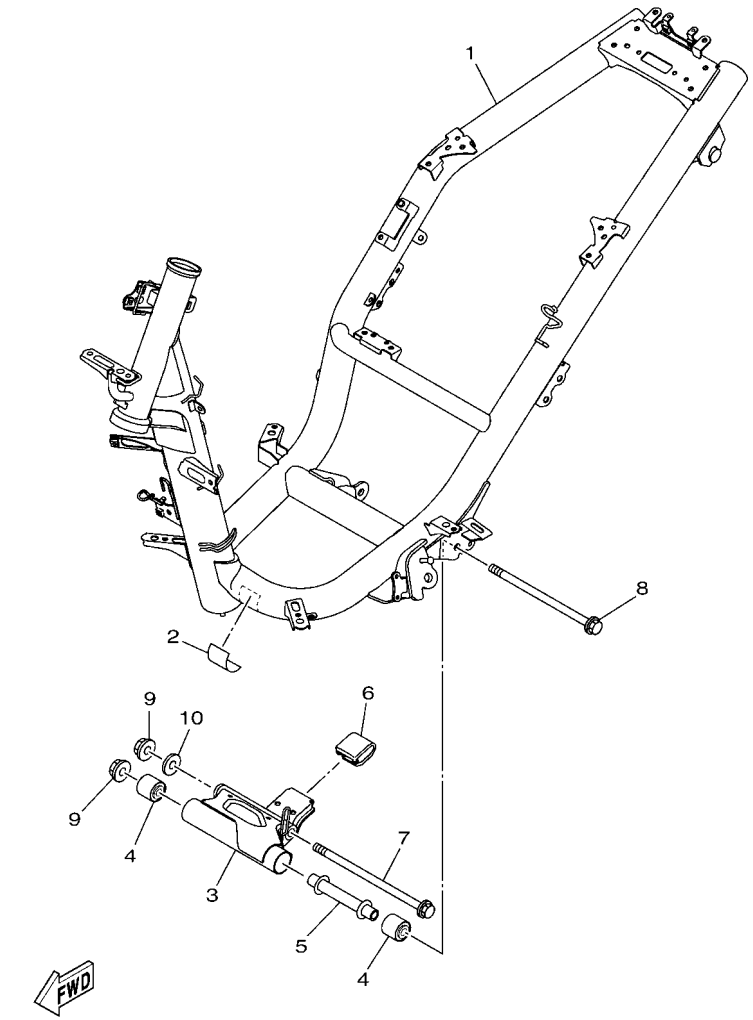

FIG. 14 FRAME

REF. NO.	PART NO.	DESCRIPTION	B926					REMARKS
1	B92–F1110–00	FRAME COMP.	1					
2	5D9–F414G–00	SEAL	1					
3	2PH–F1410–20	ENGINE BRACKET COMP.	1					
4	90388–10800	DAMPER	2					
5	54P–F1459–00	SPACER	1					
6	2PH–F7114–00	STOPPER, MAIN STAND	1					
7	90105–108B2	BOLT, FLANGE	1					
8	54P–F2141–00	SHAFT, PIVOT	1					
9	95602–10200	NUT, SELF-LOCKING	2					
10	90201–10831	WASHER, PLATE	1					

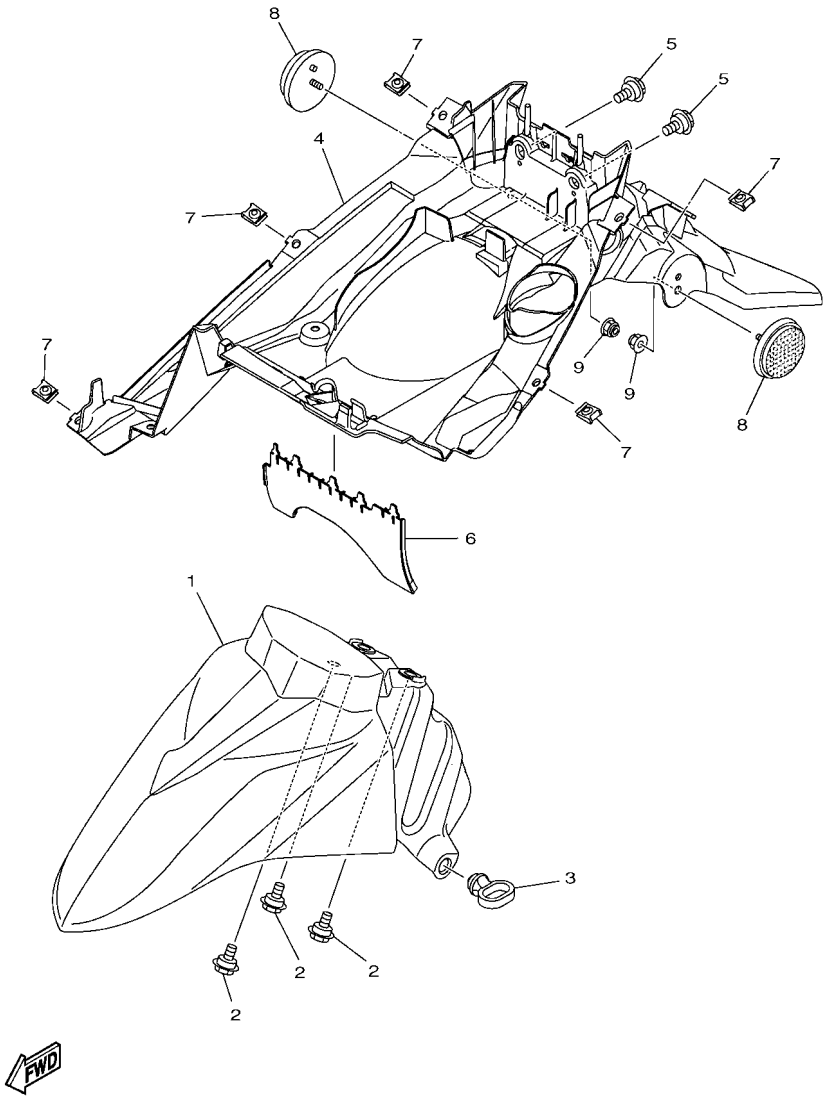

B926440-Y150

FIG. 15 FENDER

REF. NO.	PART NO.	DESCRIPTION	B926					REMARKS
1	B92–F1511–00–P9	FENDER, FRONT	1					UR FOR VRC1
	B92–F1511–00–3E	FENDER, FRONT	1					UR FOR PGD
	B92–F1511–00–PA	FENDER, FRONT	1					UR FOR CS6
2	90109–068B5	BOLT	3					
3	15K–F1518–00	HOLDER, CABLE	1					
4	B92–F1611–10	FENDER, REAR	1					
5	90109–068B5	BOLT	2					
6	B92–F1621–01	FLAP	1					
7	90183–05807	NUT, SPRING	5					
8	2FC–H5111–00	REFLECTOR, 1	2					
9	90185–05803	NUT, SELF-LOCKING	2					

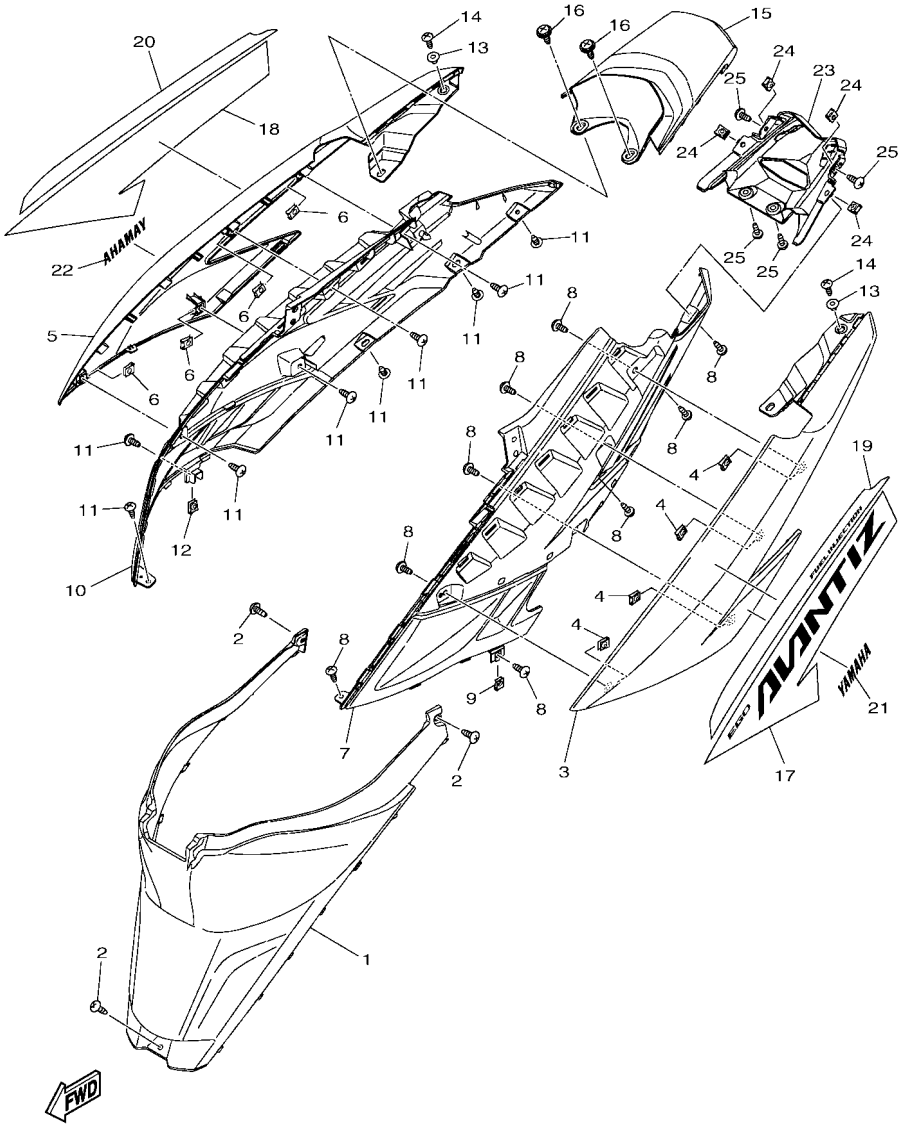

B926440-Y160

FIG. 16 SIDE COVER

REF. NO.	PART NO.	DESCRIPTION	B926					REMARKS
1	2SX–F172W–00	COVER	1					
2	97707–50016	SCREW, TRUSS HEAD TAPPING	3					
3	B92–F1711–00–P6	COVER, SIDE 1	1					SMX
4	90183–05807	NUT, SPRING	4					
5	B92–F1721–00–P6	COVER, SIDE 2	1					SMX
6	90183–05807	NUT, SPRING	4					
7	B92–F1731–00	COVER, SIDE 3	1					
8	97707–50016	SCREW, TRUSS HEAD TAPPING	9					
9	90183–05807	NUT, SPRING	1					
10	B92–F1741–00	COVER, SIDE 4	1					
11	97707–50016	SCREW, TRUSS HEAD TAPPING	9					
12	90183–05807	NUT, SPRING	1					
13	90387–05820	COLLAR	2					
14	97707–50016	SCREW, TRUSS HEAD TAPPING	2					
15	B92–F171E–00	COVER, SIDE 5	1					
16	90159–06810	SCREW, WITH WASHER	2					
17	B92–F174J–D0	GRAPHIC 5	1					UR FOR VRC1
	B92–F174J–E0	GRAPHIC 5	1					UR FOR PGD
	B92–F174J–F0	GRAPHIC 5	1					UR FOR CS6
18	B92–F174K–D0	GRAPHIC 6	1					UR FOR VRC1
	B92–F174K–E0	GRAPHIC 6	1					UR FOR PGD
	B92–F174K–F0	GRAPHIC 6	1					UR FOR CS6
19	B92–F179J–D0	GRAPHIC 7	1					UR FOR VRC1
	B92–F179J–E0	GRAPHIC 7	1					UR FOR PGD
	B92–F179J–F0	GRAPHIC 7	1					UR FOR CS6
20	B92–F179K–D0	GRAPHIC 8	1					UR FOR VRC1
	B92–F179K–E0	GRAPHIC 8	1					UR FOR PGD

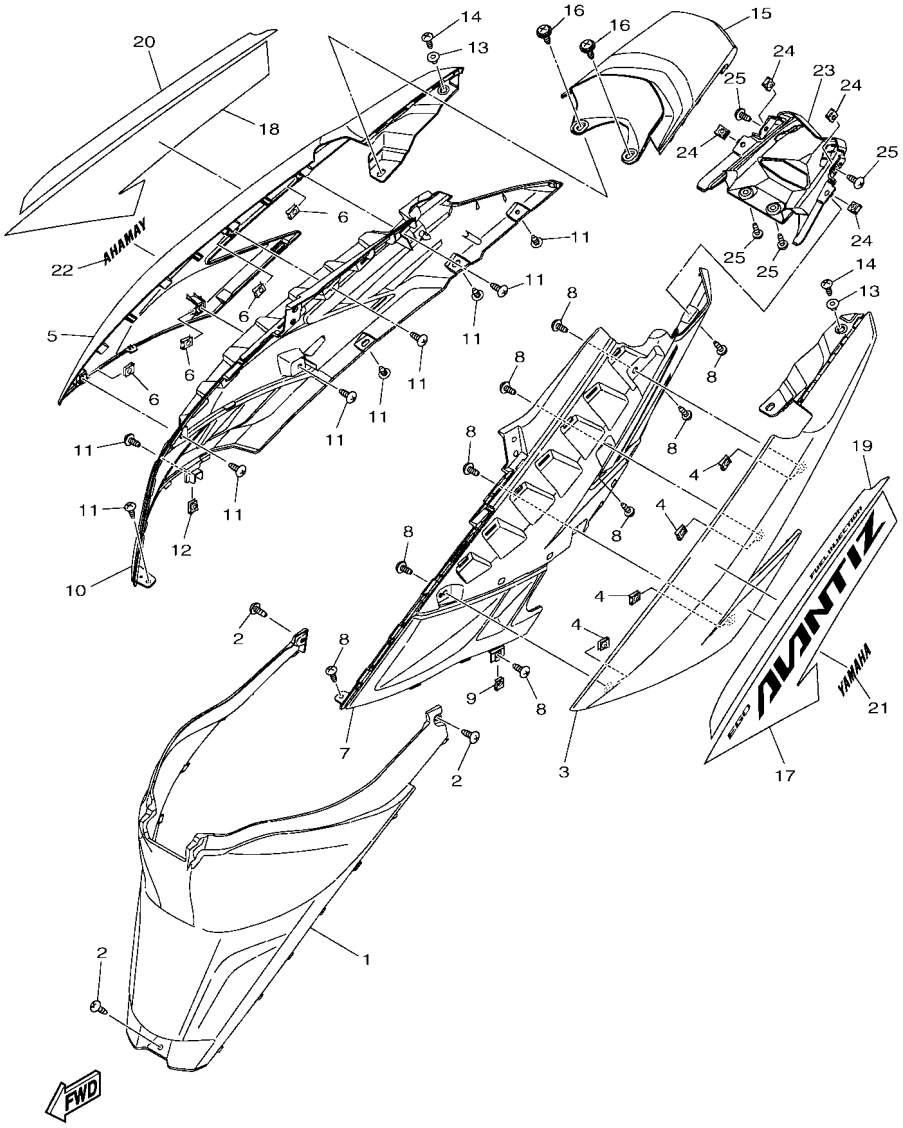

B926440-Y160

FIG. 16 SIDE COVER

REF. NO.	PART NO.	DESCRIPTION	B926					REMARKS
20	B92–F179K–F0	GRAPHIC 8	1					UR FOR CS6
21	99237–00080	EMBLEM, YAMAHA	1					
22	99237–00080	EMBLEM, YAMAHA	1					
23	B92–F172X–00	COVER, TAILLIGHT	1					
24	90183–05807	NUT, SPRING	4					
25	97707–50016	SCREW, TRUSS HEAD TAPPING	4					

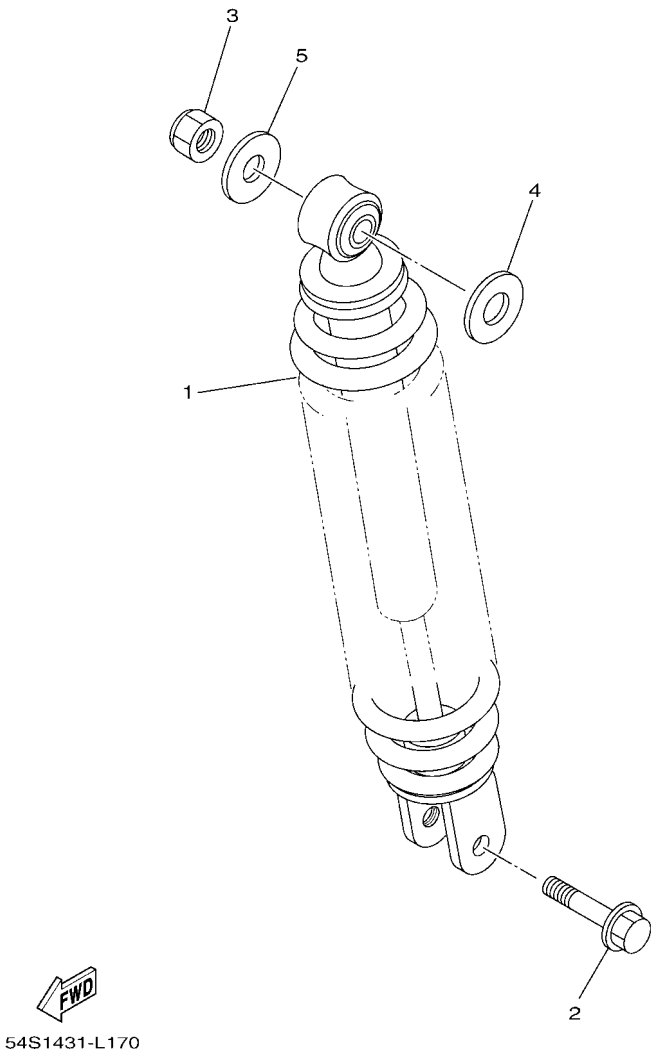

FIG. 17 REAR SUSPENSION

REF. NO.	PART NO.	DESCRIPTION	B926					REMARKS
1	10C–F2210–30	SHOCK ABSORBER ASSY, REAR	1					
2	90105–088H4	BOLT, FLANGE	1					
3	95302–10600	NUT, HEXAGON	1					
4	90201–12028	WASHER, PLATE	1					
5	90201–10065	WASHER, PLATE	1					

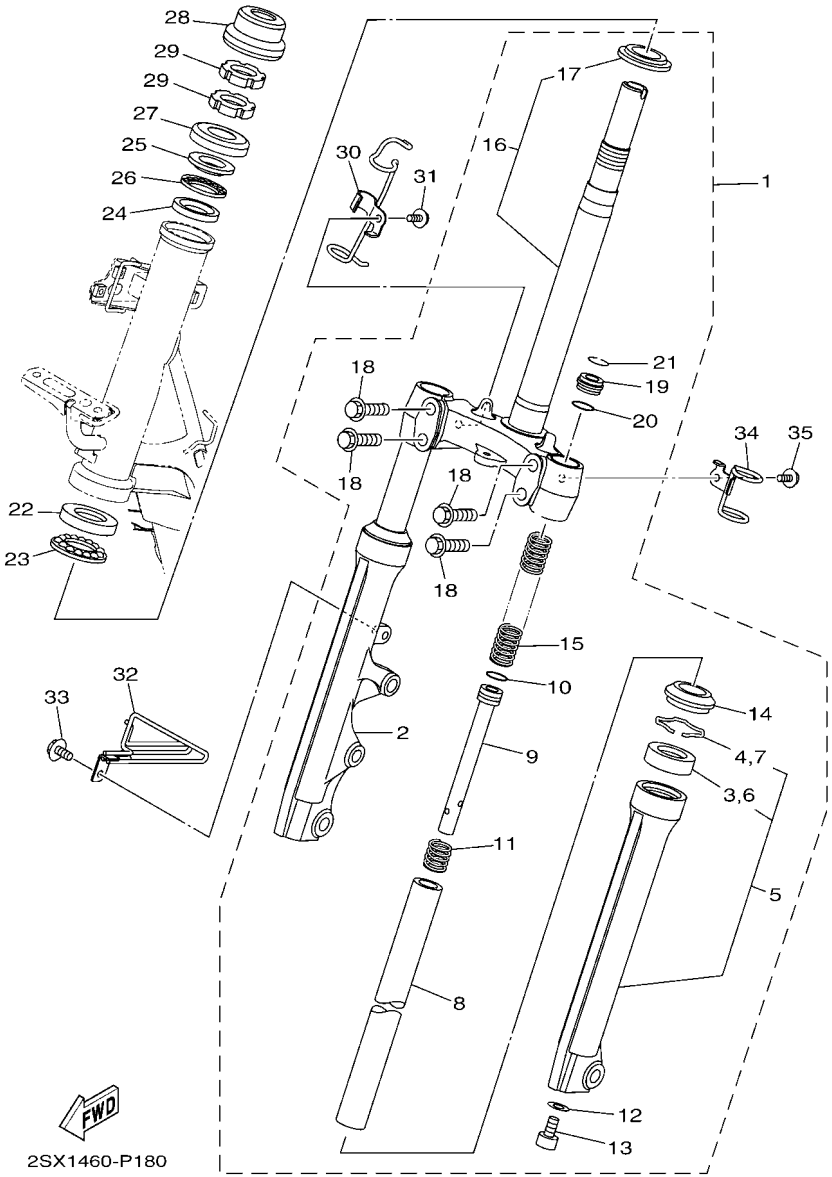

FIG. 18 STEERING

REF. NO.	PART NO.	DESCRIPTION	B926					REMARKS
1	B92–F3100–00	FRONT FORK ASSY	1					
2	B92–F3136–00	.TUBE, OUTER 2	1					
3	4UV–F3145–00	..OIL SEAL	1					
4	5P0–F3156–00	..RING, SNAP	1					
5	B92–F3126–00	.TUBE, OUTER (L.H)	1					
6	4UV–F3145–00	..OIL SEAL	1					
7	5P0–F3156–00	..RING, SNAP	1					
8	B92–F3110–00	.INNER TUBE COMP.1	2					
9	B92–F3170–00	.CYLINDER COMP., FRONT FORK	2					
10	2JG–F3157–00	.RING, PISTON	2					
11	5TF–F3152–00	.SPRING, SUB	2					
12	509–F3158–L0	.GASKET	2					
13	31D–F3181–50	.BOLT, HEXAGON SOCKET HEAD	2					
14	5LL–F3144–00	.SEAL, DUST	2					
15	B92–F3141–00	.SPRING, FRONT FORK	2					
16	B92–F3340–00	.UNDER BRACKET COMP.	1					
17	4FP–F3411–10	..RACE, BALL 1	1					
18	4D0–F3346–00	.BOLT 1	4					
19	1FC–F3111–10	.BOLT, CAP	2					
20	2JG–F3147–00	.O-RING	2					
21	31D–F3153–00	.RING, SNAP	2					
22	1KL–F3412–10	RACE, BALL 2	1					
23	5VL–F341E–10	RETAINER, BALL BEARING	1					
24	4RT–F3412–10	RACE, BALL 2	1					
25	4RT–F3411–10	RACE, BALL 1	1					
26	1P6–F341E–10	RETAINER, BALL BEARING	1					
27	2WB–F3416–00	COVER, BALL RACE 2	1					

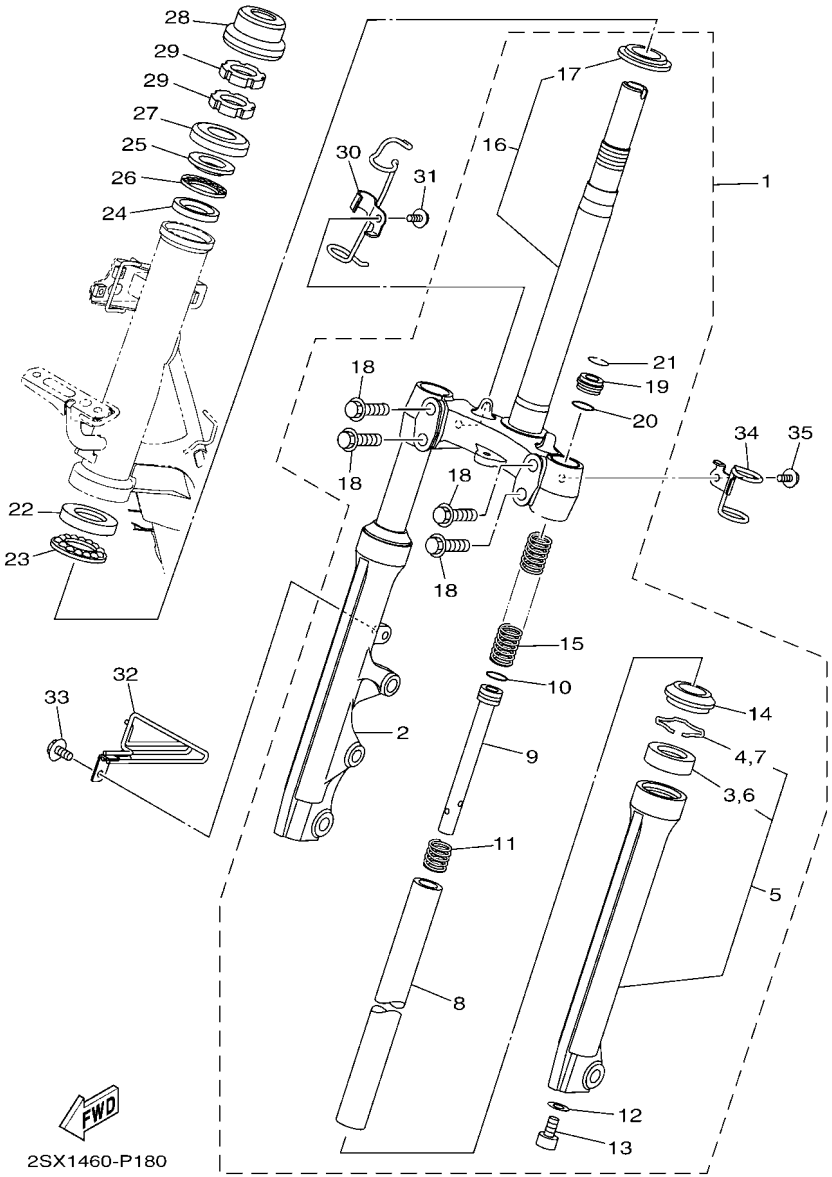

FIG. 18 STEERING

REF. NO.	PART NO.	DESCRIPTION	B926					REMARKS
28	54P–F3415–00	COVER, BALL RACE 1	1					
29	90179–25002	NUT	2					
30	B92–F5875–00	HOLDER, BRAKE HOSE 1	1					
31	95D02–06010	BOLT, FLANGE DEEP RECESS	1					
32	B92–F5876–00	HOLDER, BRAKE HOSE 2	1					
33	95D32–06012	BOLT, FLANGE DEEP RECESS	1					
34	B92–F1518–00	HOLDER, CABLE	1					
35	95D02–06010	BOLT, FLANGE DEEP RECESS	1					

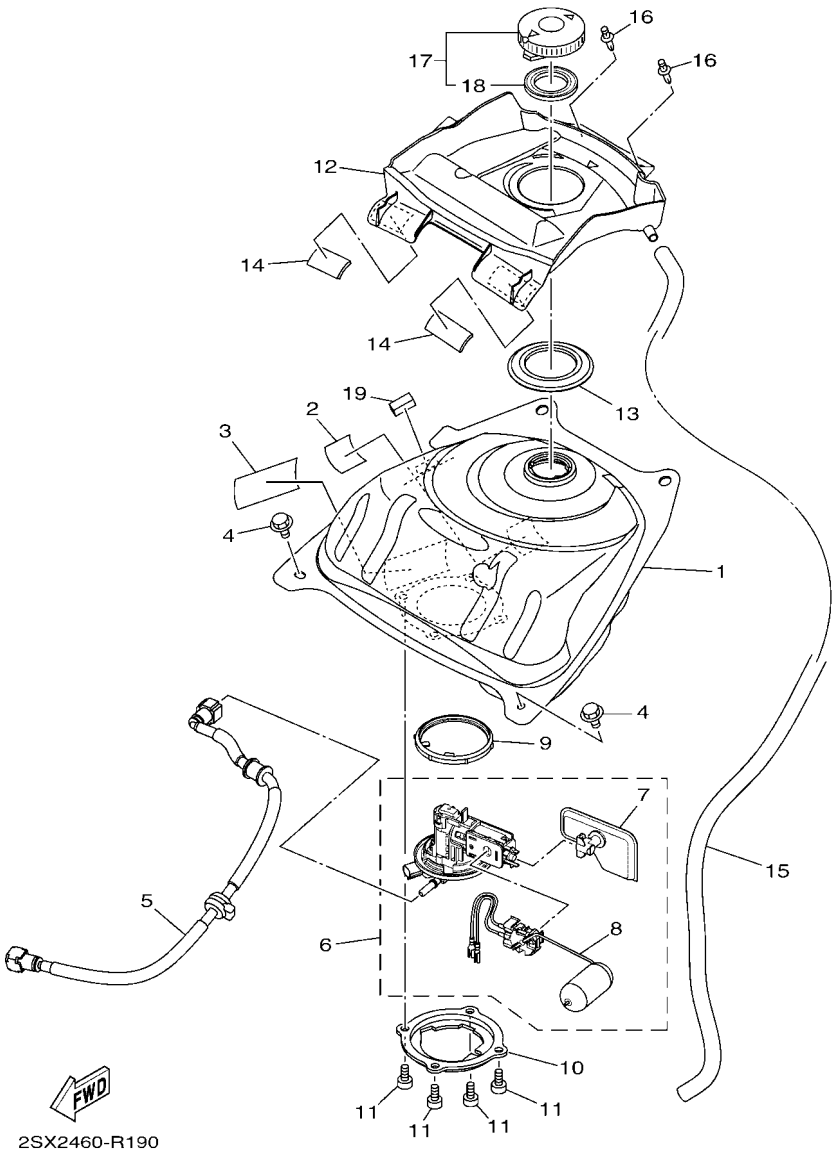

FIG. 19 FUEL TANK

REF. NO.	PART NO.	DESCRIPTION	B926					REMARKS
1	B92–F4110–00	FUEL TANK COMP.	1					
2	5D9–F414G–10	SEAL	1					
3	5D9–F414G–00	SEAL	1					
4	90119–06155	BOLT, WITH WASHER	2					
5	2PH–E3971–02	PIPE, FUEL 1	1					
6	2PH–E3907–00	FUEL PUMP COMP.	1					
7	54P–E3915–00	.FILTER, FUEL SUCTION	1					
8	2PH–H5752–00	.SENDER	1					
9	54P–F414G–10	SEAL	1					
10	B92–F4491–00	BRACKET, FUEL PUMP	1					
11	91332–05010	BOLT	4					
12	B92–F41B1–01	COVER, TANK	1					
13	B92–F414G–00	SEAL	1					
14	5D9–H2126–00	PAD, BATTERY	2					
15	91A20–07065	TUBE, FLEXIBLE VINYL	1					
16	90269–06816	RIVET	2					
17	4YY–F4610–00	CAP ASSY	1					
18	4YY–F4612–00	.PACKING, CAP	1					
19	90520–08812	DAMPER, PLATE	1					

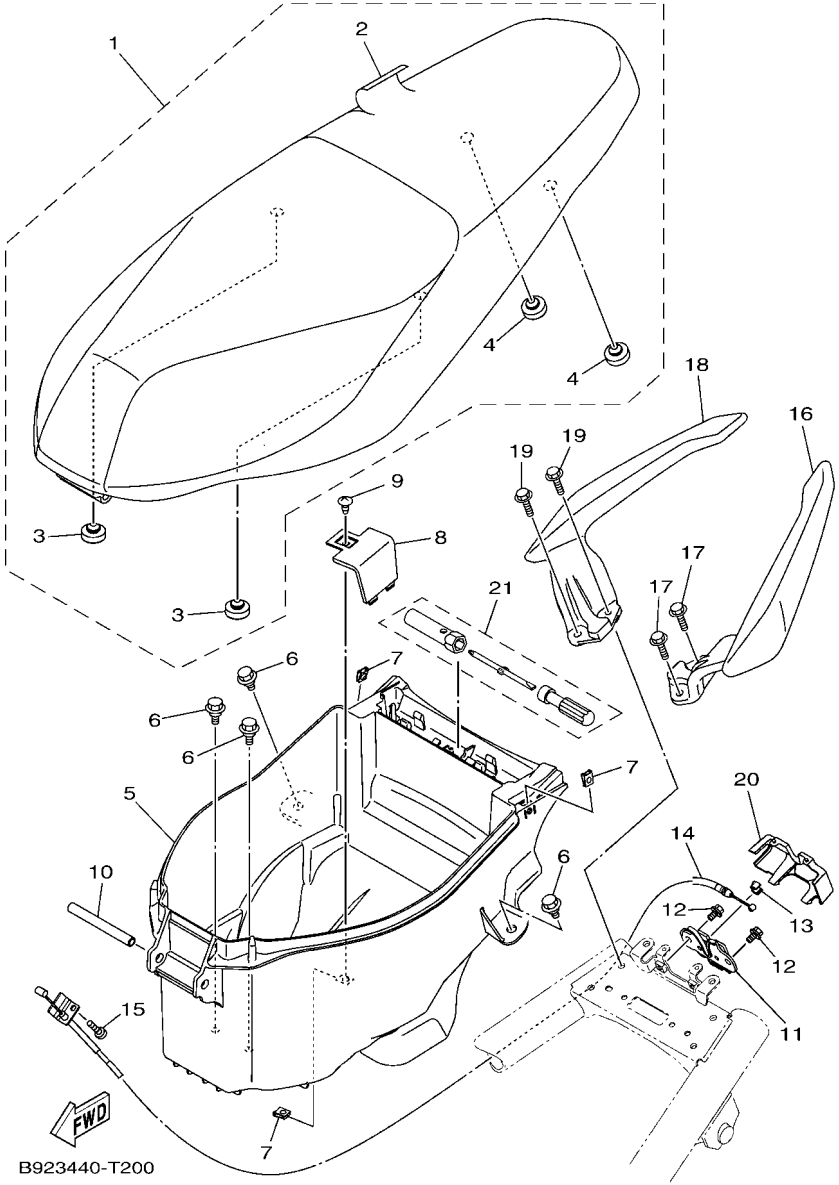

FIG. 20 SEAT

REF. NO.	PART NO.	DESCRIPTION	B926					REMARKS
1	2SX–F4730–02	DOUBLE SEAT ASSY	1					
2	2SX–F470F–01	.SEAT COVER COMP.	1					
3	3C1–F4741–00	.PAD, SEAT	2					
4	5BP–F4741–00	.PAD, SEAT	2					
5	2SX–F473R–00	BOX 1	1					
6	90109–068B4	BOLT	4					
7	90183–05807	NUT, SPRING	3					
8	2SX–F482H–01	CAP	1					
9	97707–50016	SCREW, TRUSS HEAD TAPPING	1					
10	2WB–F4727–00	PIN, SEAT FITTING	1					
11	40D–F4780–01	SEAT LOCK ASSY	1					
12	95E32–06010	BOLT, FLANGE DEEP RECESS	2					
13	1S8–F4768–00	STOPPER	1					
14	2SX–F478E–10	CABLE, SEAT LOCK	1					
15	98507–05010	SCREW, PAN HEAD	1					
16	B92–F474A–00–P0	ASSIST, GRIP	1					UR FOR VRC1
	B92–F474A–00–3E	ASSIST, GRIP	1					UR FOR PGD
	B92–F474A–00–P6	ASSIST, GRIP	1					UR FOR CS6
17	95D32–06020	BOLT, FLANGE DEEP RECESS	2					
18	B92–F474W–00–P0	ASSIST,GRIP 2	1					UR FOR VRC1
	B92–F474W–00–3E	ASSIST,GRIP 2	1					UR FOR PGD
	B92–F474W–00–P6	ASSIST,GRIP 2	1					UR FOR CS6
19	95D32–06020	BOLT, FLANGE DEEP RECESS	2					
20	B92–F472T–01	COVER, SEAT LOCK	1					
21	1VB–F8100–00	TOOL KIT	1					

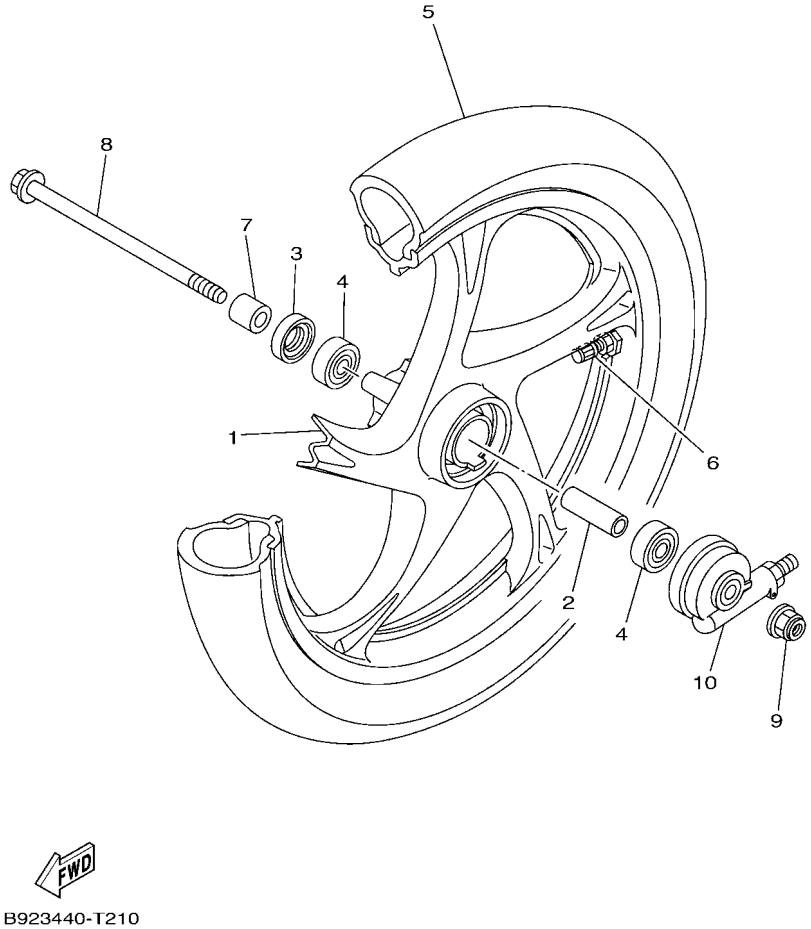

FIG. 21 FRONT WHEEL

REF. NO.	PART NO.	DESCRIPTION	B926					REMARKS
1	1VB–F5168–00–33	CAST WHEEL, FRONT	1					YB
2	90560–10292	SPACER	1					
3	93106–20808	OIL SEAL	1					
4	93306–300YF	BEARING	2					
5	94107–14808	TIRE (70/90-14M/C 34P N)	1					KENDA
6	93900–00817	VALVE, RIM (TR412)	1					
7	90387–10277	COLLAR	1					
8	2SX–F5181–00	AXLE, WHEEL	1					
9	95602–10200	NUT, SELF-LOCKING	1					
10	5TL–F5190–01	GEAR UNIT ASSY	1					

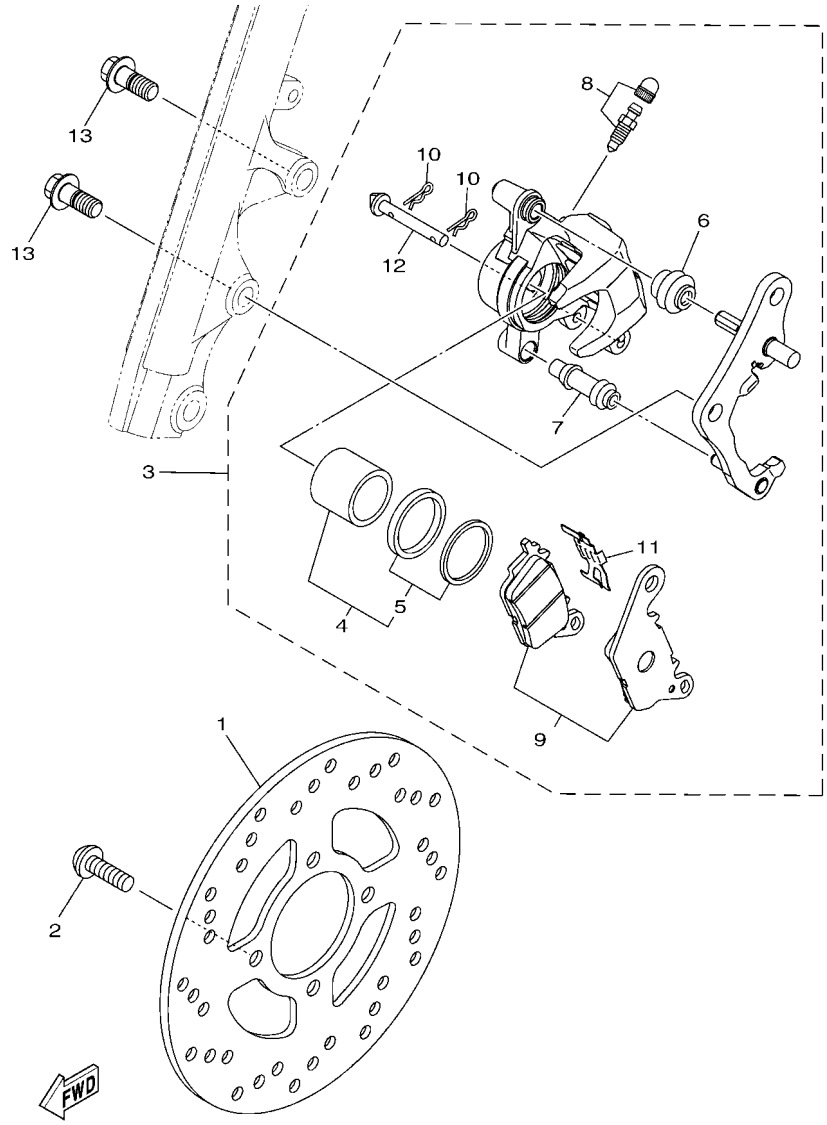

FIG. 22 FRONT BRAKE CALIPER

REF. NO.	PART NO.	DESCRIPTION	B926					REMARKS
1	5TL–F582U–10	DISK, BRAKE (RIGHT)	1					
2	90111–08853	BOLT, HEXAGON SOCKET BUTTON	4					
3	2SX–F580U–10	CALIPER ASSY (RIGHT)	1					
4	2BM–F5802–00	.PISTON ASSY, CALIPER	1					
5	5YP–F5803–50	..CALIPER SEAL KIT	1					
6	2BM–F5917–00	.BOOT, CALIPER	1					
7	5YP–F5937–00	.BOOT 2	1					
8	4C9–W0048–00	.BLEED SCREW KIT	1					
9	2BM–F5805–00	.BRAKE PAD KIT	1					
10	5YP–F5925–01	.CLIP	2					
11	2BM–F5919–00	.SUPPORT, PAD	1					
12	5YP–F5924–10	.PIN, PAD	1					
13	90105–10831	BOLT, FLANGE	2					

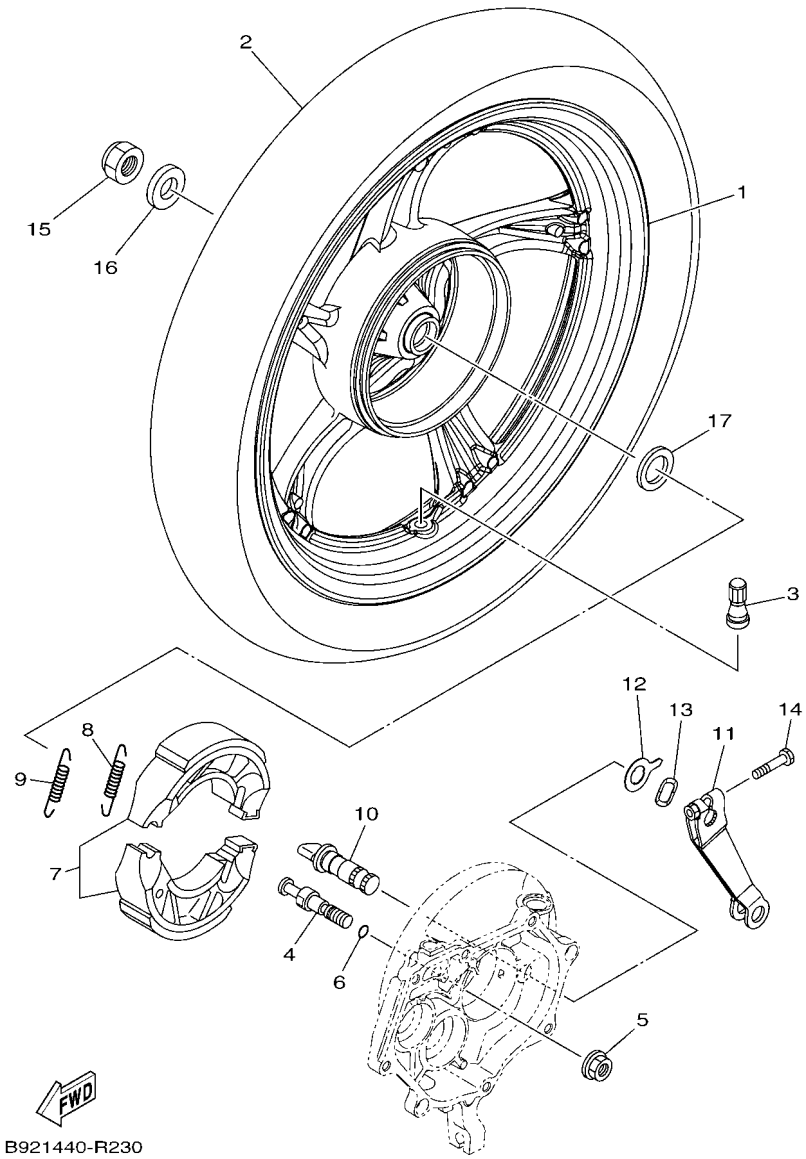

FIG. 23 REAR WHEEL

REF. NO.	PART NO.	DESCRIPTION	B926					REMARKS
1	44P–F5338–00–33	CAST WHEEL, REAR	1					YB
2	94109–14804	TIRE(90/80-14M/C 49P REINF N)	1					KENDA
3	93900–00817	VALVE, RIM (TR412)	1					
4	54P–F5326–00	PIN, PIVOT	1					UR Either can use
	1GC–F5326–00	PIN, PIVOT	1					UR Either can use
5	95702–10500	NUT, FLANGE	1					
6	93210–07802	O-RING	1					
7	5LW–F530K–00	BRAKE SHOE SET	1					
8	90506–12001	SPRING, TENSION	1					
9	90506–15001	SPRING, TENSION	1					
10	10C–F5351–00	CAMSHAFT	1					
11	B92–F5355–00	LEVER, CAMSHAFT	1					
12	5LW–F533A–00	PLATE, INDICATOR	1					
13	90206–14093	WASHER, WAVE	1					
14	90101–06046	BOLT	1					
15	90185–16800	NUT, SELF-LOCKING	1					
16	90201–16810	WASHER, PLATE	1					
17	90201–220J8	WASHER, PLATE	1					

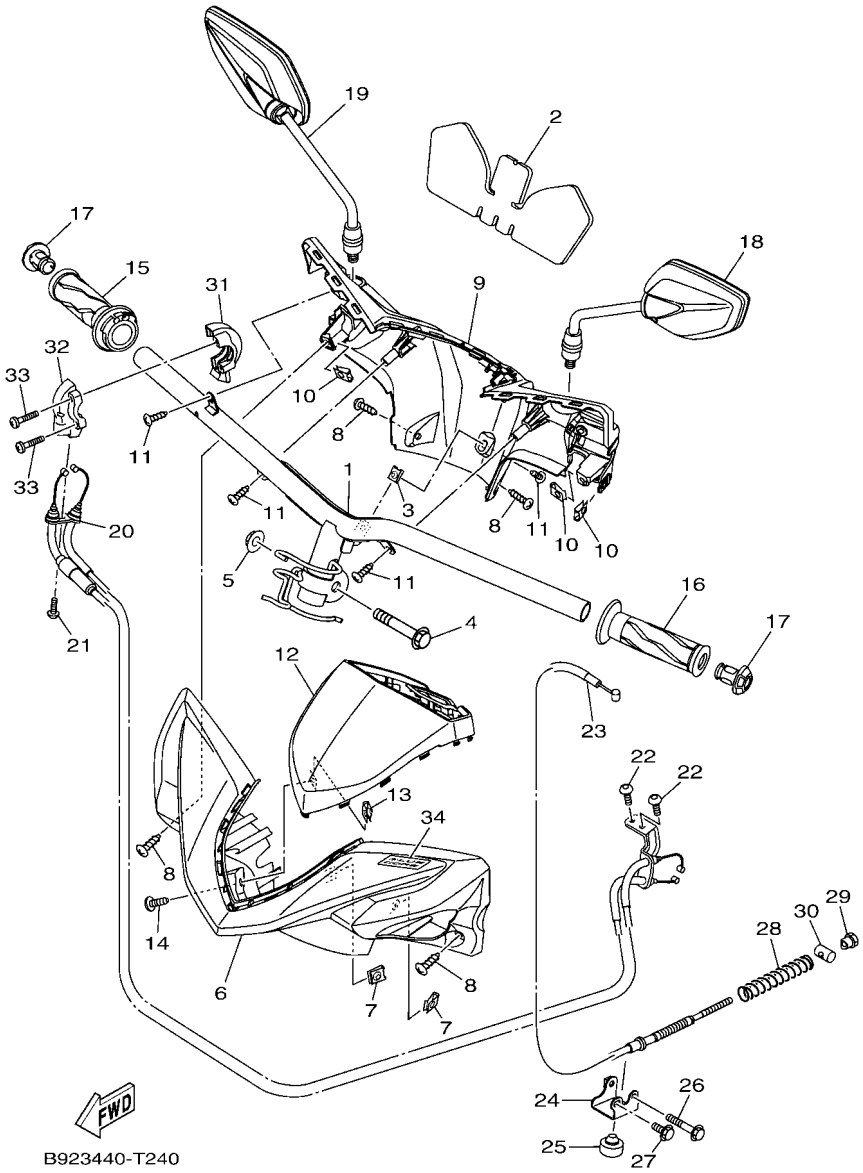

FIG. 24 STEERING HANDLE & CABLE

REF. NO.	PART NO.	DESCRIPTION	B926					REMARKS
1	2SX–F6110–00	HANDLE COMP.	1					
2	B92–F6113–00	DAMPER	1					
3	90183–05807	NUT, SPRING	1					
4	90105–10896	BOLT, FLANGE	1					
5	90185–10011	NUT, SELF-LOCKING	1					
6	B92–F6143–00–P9	COVER, HANDLE UPPER 1	1					UR FOR VRC1
	B92–F6143–00–3E	COVER, HANDLE UPPER 1	1					UR FOR PGD
	B92–F6143–00–PA	COVER, HANDLE UPPER 1	1					UR FOR CS6
7	90183–05807	NUT, SPRING	2					
8	97707–50016	SCREW, TRUSS HEAD TAPPING	4					
9	2SX–F6145–00	COVER, HANDLE UPPER 2	1					
10	90183–05807	NUT, SPRING	3					
11	97707–50016	SCREW, TRUSS HEAD TAPPING	4					
12	B92–H3559–00–P2	COVER, METER	1					SMX
13	90183–05807	NUT, SPRING	1					
14	97707–50016	SCREW, TRUSS HEAD TAPPING	1					
15	B92–F6240–00	GRIP ASSY	1					
16	1VP–F6241–00	GRIP	1					
17	B92–F6246–00	END, GRIP	2					
18	2WB–F6280–00	REAR VIEW MIRROR ASSY (LEFT)	1					
19	2WB–F6290–00	REAR VIEW MIRROR ASSY (RIGHT)	1					
20	2SX–F6301–10	THROTTLE CABLE ASSY	1					
21	98502–05016	SCREW,PAN HEAD	1					
22	92012–05010	BOLT, BUTTON HEAD	2					
23	2SX–F6351–00	CABLE, BRAKE	1					
24	B92–F637G–00	HOLDER, WIRE	1					
25	B92–F6257–00	STOPPER	1					

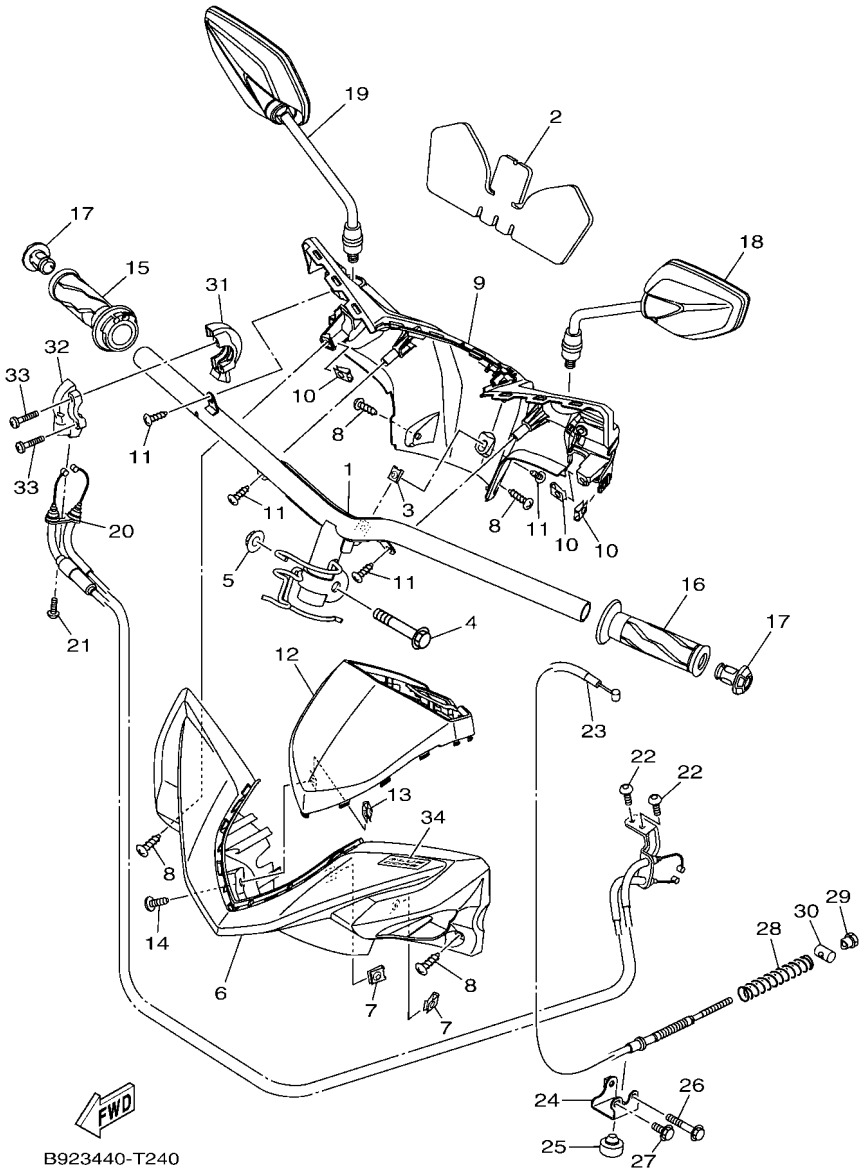

FIG. 24 STEERING HANDLE & CABLE

REF. NO.	PART NO.	DESCRIPTION	B926					REMARKS
26	95E32–06040	BOLT, FLANGE DEEP RECESS	1					
27	95E32–06014	BOLT, FLANGE DEEP RECESS	1					
28	90501–16003	SPRING, COMPRESSION	1					
29	90179–06411	NUT	1					
30	90249–12008	PIN	1					
31	55D–F6281–00	CAP, GRIP UPPER	1					
32	55D–F6282–00	CAP, GRIP UNDER	1					
33	98502–05025	SCREW, PAN HEAD	2					
34	B92–F1737–00	EMBLEM	1					

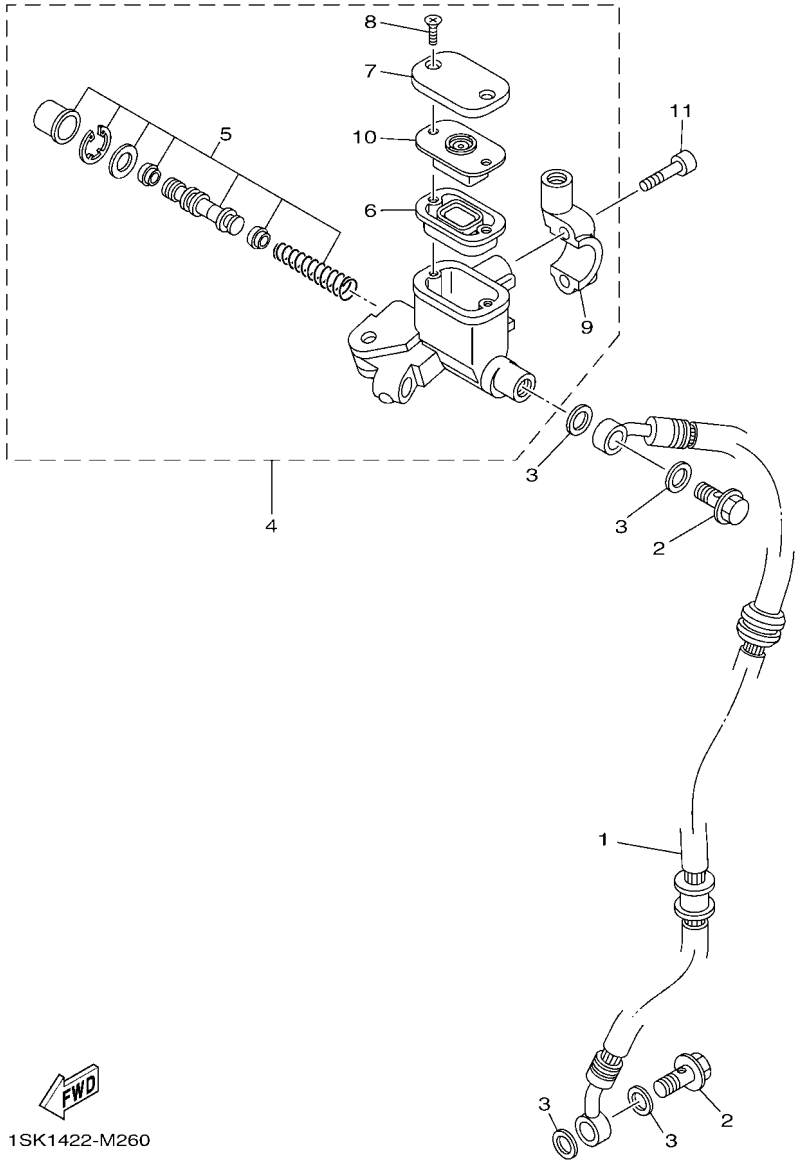

FIG. 25 FRONT MASTER CYLINDER

REF. NO.	PART NO.	DESCRIPTION	B926					REMARKS
1	2SX–F5872–00	HOSE, BRAKE 1	1					
2	90401–10812	BOLT, UNION	2					
3	90201–10118	WASHER, PLATE	4					
4	5P0–F583T–04	MASTER CYLINDER ASSY	1					
5	5P0–F580A–00	.CYLINDER KIT, MASTER	1					
6	5P0–F5854–00	.DIAPHRAGM, RESERVOIR	1					
7	5P0–F5852–00	.CAP, RESERVOIR	1					
8	36Y–2589H–00	.SCREW	2					
9	5TL–F5867–01	.BRACKET, MASTER CYLINDER	1					
10	5P0–F5855–00	.BUSH,DIAPHRAGM	1					
11	91312–06025	BOLT, HEXAGON SOCKET HEAD	2					

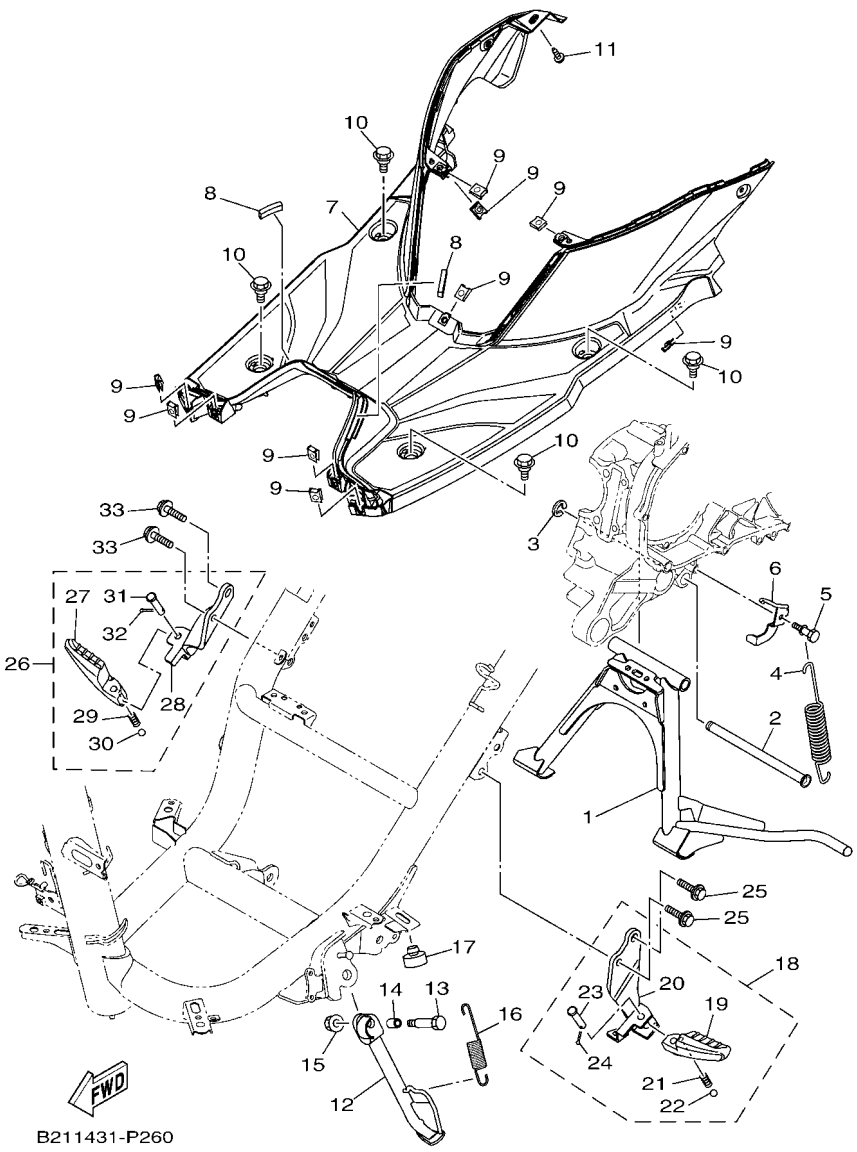

FIG. 26 STAND & FOOTREST

REF. NO.	PART NO.	DESCRIPTION	B926					REMARKS
1	B92–F7111–00	STAND, MAIN	1					
2	2PH–F7112–00	SHAFT, MAIN STAND	1					
3	99002–09600	CIRCLIP	1					
4	90506–35821	SPRING, TENSION	1					
5	5LW–F7254–00	HOOK	1					
6	B92–F7267–00	GUIDE, WIRE	1					
7	2SX–F7481–00	BOARD, FOOTREST	1					
8	90520–08004	DAMPER, PLATE	2					
9	90183–05807	NUT, SPRING	9					
10	90109–068B5	BOLT	4					
11	97707–50016	SCREW, TRUSS HEAD TAPPING	1					
12	B92–F7311–00	STAND, SIDE	1					
13	90101–08847	BOLT	1					
14	90387–08820	COLLAR	1					
15	95602–08200	NUT, U FLANGE	1					
16	90506–20514	SPRING, TENSION	1					
17	B92–F6257–00	STOPPER	1					
18	B92–F7430–00	REAR FOOTREST ASSY 1	1					
19	B92–F7431–00	.FOOTREST, REAR 1	1					
20	B92–F7432–00	.BRACKET 1	1					
21	90501–12743	.SPRING, COMPRESSION	1					
22	93501–04823	.BALL	1					
23	91701–08035	.PIN	1					
24	91401–25015	.PIN, COTTER	1					
25	95D02–08030	BOLT, FLANGE DEEP RECESS	2					
26	B92–F7440–00	REAR FOOTREST ASSY 2	1					
27	B92–F7441–00	.FOOTREST, REAR 2	1					

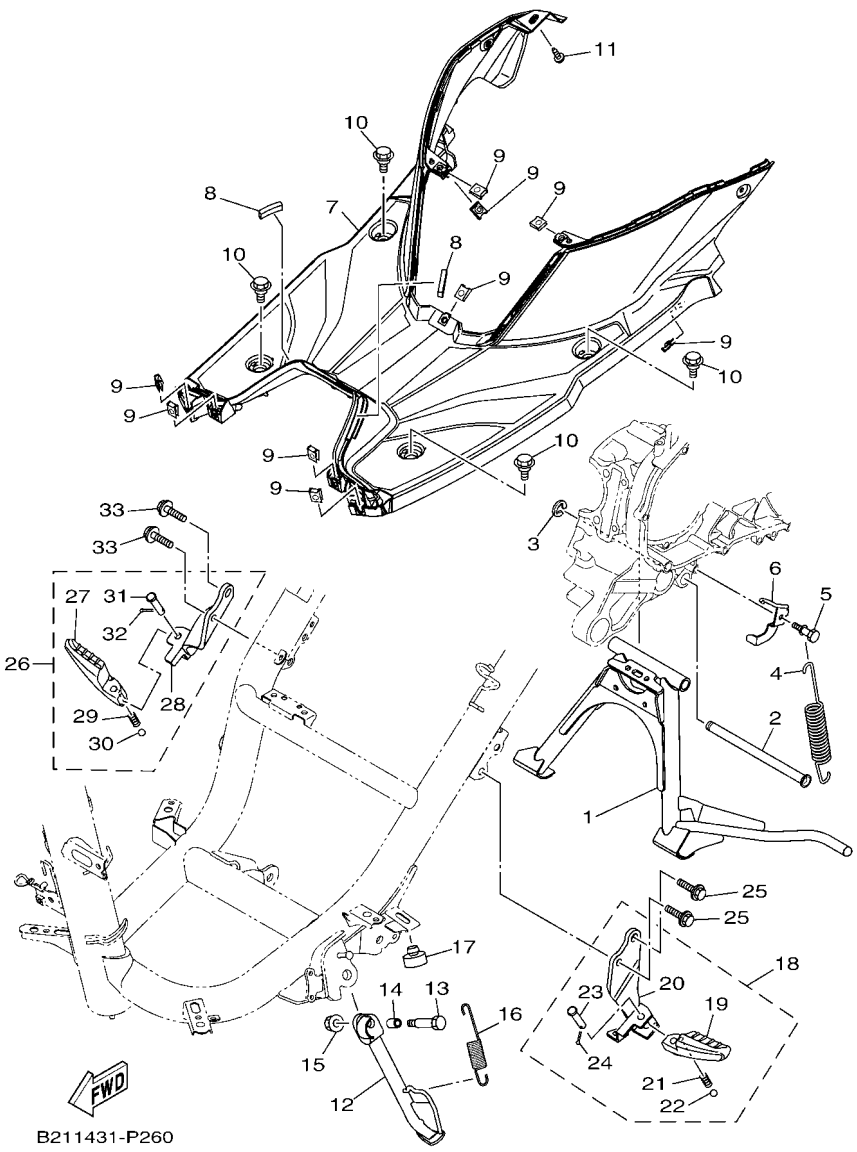

FIG. 26 STAND & FOOTREST

REF. NO.	PART NO.	DESCRIPTION	B926					REMARKS
28	B92–F7442–00	.BRACKET 2	1					
29	90501–12743	.SPRING, COMPRESSION	1					
30	93501–04823	.BALL	1					
31	91701–08035	.PIN	1					
32	91401–25015	.PIN, COTTER	1					
33	95D02–08030	BOLT, FLANGE DEEP RECESS	2					

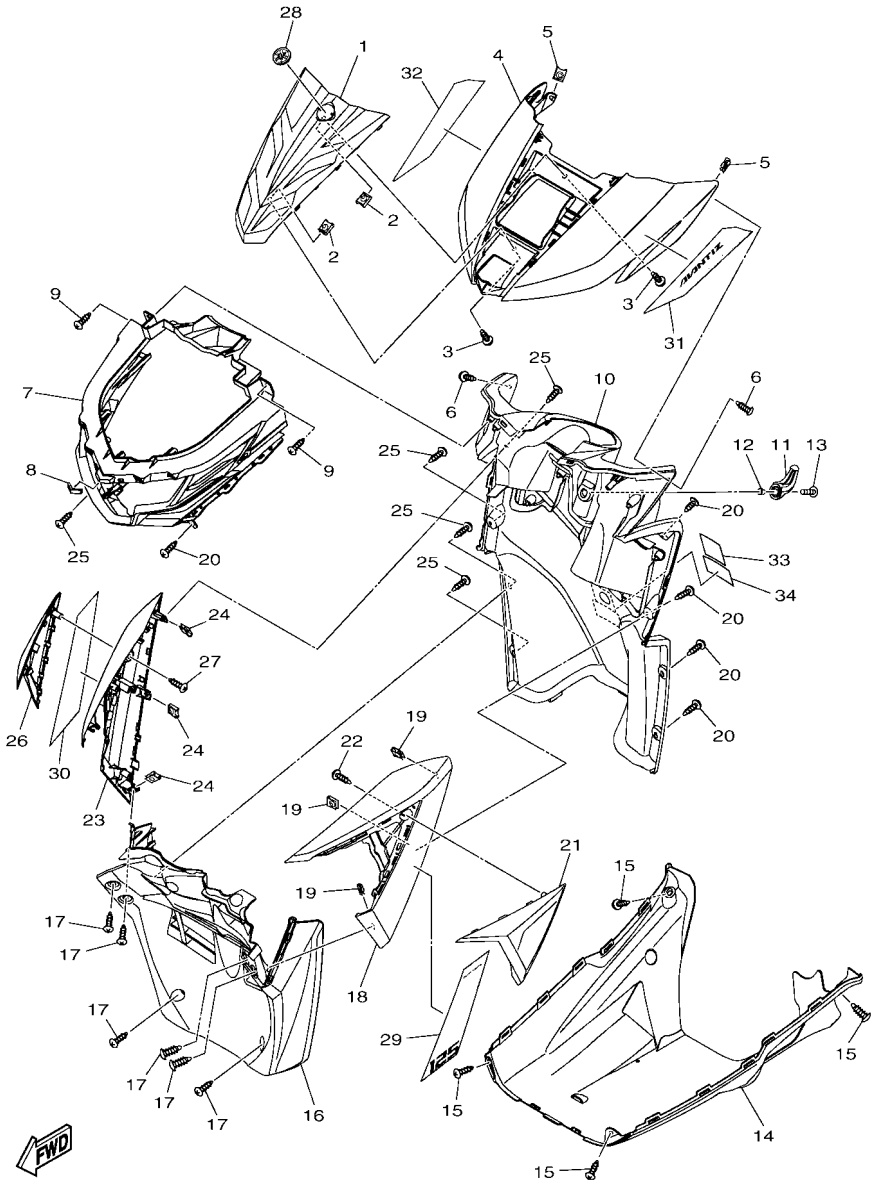

B926440-Y270

FIG. 27 LEG SHIELD

REF. NO.	PART NO.	DESCRIPTION	B926					REMARKS
1	B92–F3391–00–P2	PANEL, FRONT	1					SMX
2	90183–05807	NUT, SPRING	2					
3	97707–50016	SCREW, TRUSS HEAD TAPPING	2					
4	B92–F2865–00–PA	COVER, FRONT	1					UR FOR VRC1
	B92–F2865–00–3E	COVER, FRONT	1					UR FOR PGD
	B92–F2865–00–PB	COVER, FRONT	1					UR FOR CS6
5	90183–05807	NUT, SPRING	2					
6	97707–50016	SCREW, TRUSS HEAD TAPPING	2					
7	2SX–F8311–00	LEG SHIELD 1	1					
8	90520–02819	DAMPER, PLATE	1					
9	97707–50016	SCREW, TRUSS HEAD TAPPING	2					
10	2SX–F8300–00	LEG SHIELD ASSY	1					
11	B92–F8257–00	HOOK 1	1					
12	B92–F8373–00	COLLAR	1					
13	90111–06865	BOLT, HEXAGON SOCKET BUTTON	1					
14	B92–F8385–00	COVER, LOWER	1					
15	97707–50016	SCREW, TRUSS HEAD TAPPING	4					
16	2SX–F1552–01	FENDER, INNER	1					
17	97707–50016	SCREW, TRUSS HEAD TAPPING	6					
18	B92–F8345–00–P8	MOLE 1	1					UR FOR VRC1
	B92–F8345–00–3E	MOLE 1	1					UR FOR PGD
	B92–F8345–00–PA	MOLE 1	1					UR FOR CS6
19	90183–05807	NUT, SPRING	3					
20	97707–50016	SCREW, TRUSS HEAD TAPPING	5					
21	2SX–F835U–00	PANEL 1	1					
22	97707–50016	SCREW, TRUSS HEAD TAPPING	1					
23	B92–F8346–00–P8	MOLE 2	1					UR FOR VRC1

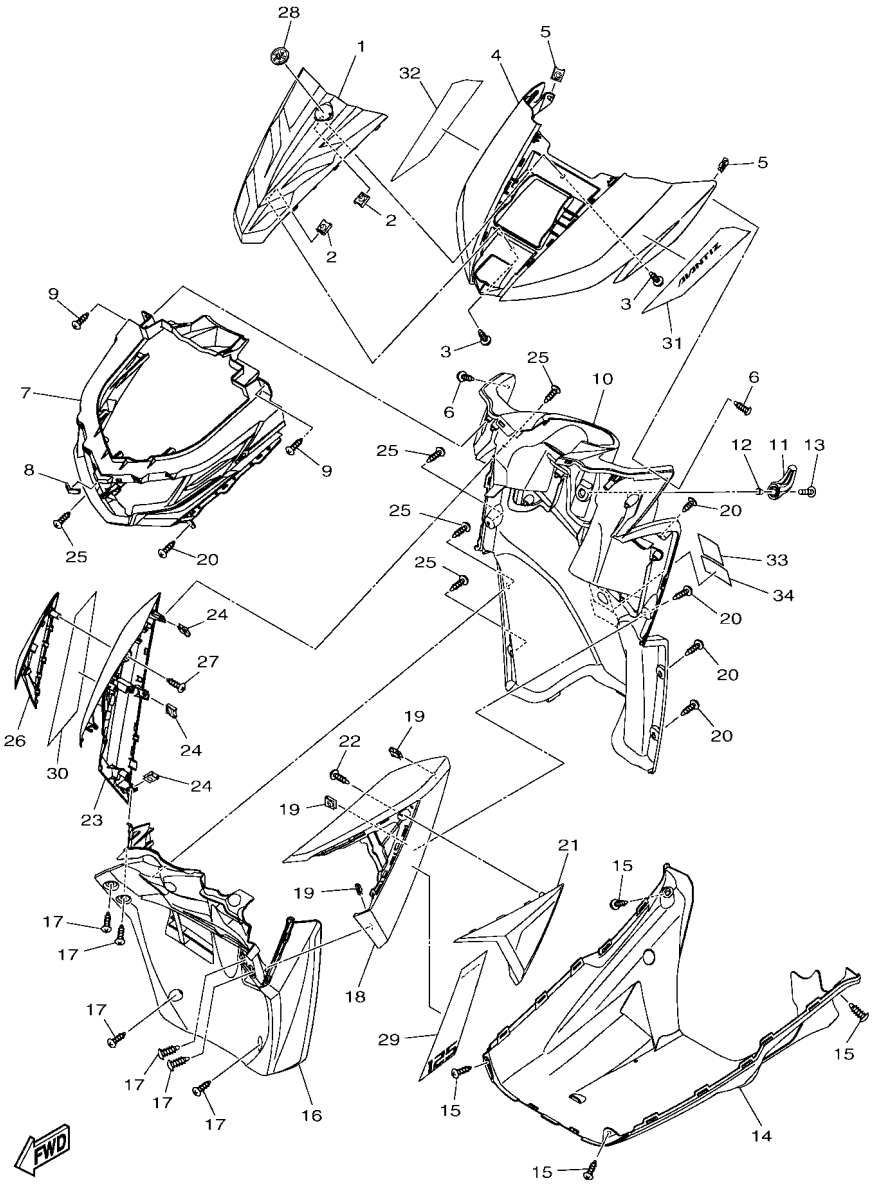

B926440-Y270

FIG. 27 LEG SHIELD

REF. NO.	PART NO.	DESCRIPTION	B926					REMARKS
23	B92–F8346–00–3E	MOLE 2	1					UR FOR PGD
	B92–F8346–00–PA	MOLE 2	1					UR FOR CS6
24	90183–05807	NUT, SPRING	3					
25	97707–50016	SCREW, TRUSS HEAD TAPPING	5					
26	2SX–F835V–00	PANEL 2	1					
27	97707–50016	SCREW, TRUSS HEAD TAPPING	1					
28	31B–F313B–00	EMBLEM, 1	1					
29	B92–F8391–D0	GRAPHIC 1	1					UR FOR VRC1
	B92–F8391–E0	GRAPHIC 1	1					UR FOR PGD
	B92–F8391–F0	GRAPHIC 1	1					UR FOR CS6
30	B92–F8392–D0	GRAPHIC 2	1					UR FOR VRC1
	B92–F8392–E0	GRAPHIC 2	1					UR FOR PGD
	B92–F8392–F0	GRAPHIC 2	1					UR FOR CS6
31	B92–F8393–D0	GRAPHIC 3	1					UR FOR VRC1
	B92–F8393–E0	GRAPHIC 3	1					UR FOR PGD
	B92–F8393–F0	GRAPHIC 3	1					UR FOR CS6
32	B92–F8394–A0	GRAPHIC 4	1					UR FOR VRC1
	B92–F8394–B0	GRAPHIC 4	1					UR FOR PGD
	B92–F8394–C0	GRAPHIC 4	1					UR FOR CS6
33	B92–F1568–00	LABEL, WARNING	1					
34	B92–F1668–00	LABEL, TIRE	1					

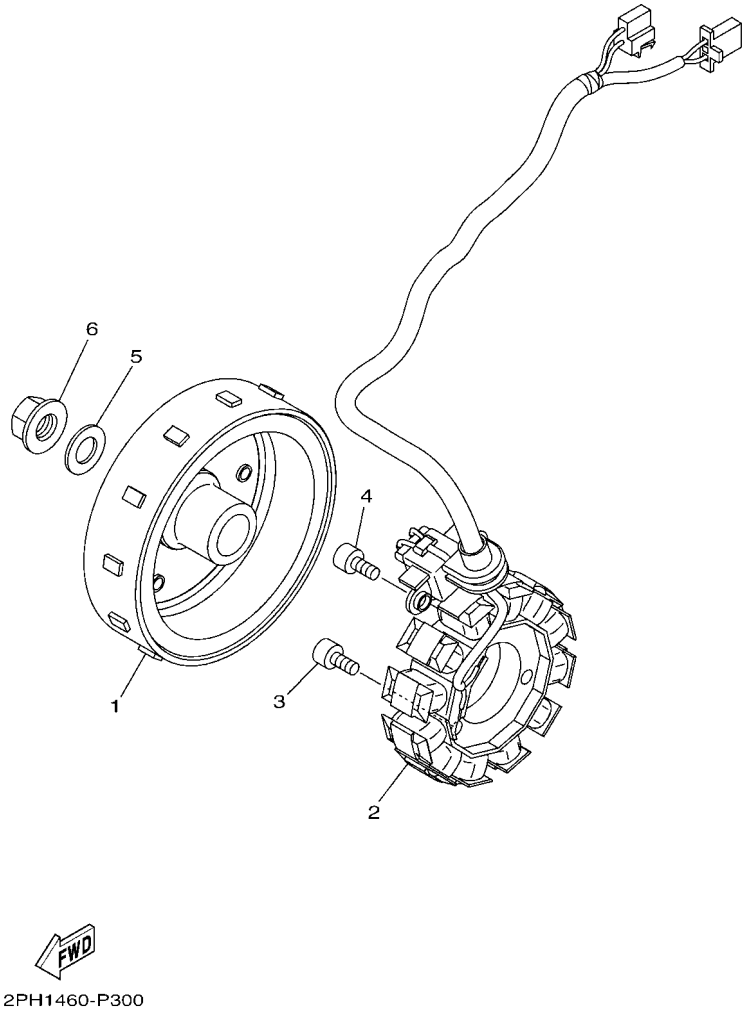

FIG. 28 GENERATOR

REF. NO.	PART NO.	DESCRIPTION	B926					REMARKS
1	2PH–H1450–20	ROTOR ASSY	1					
2	2PH–H1410–10	STATOR ASSY	1					
3	91332–06020	BOLT	3					
4	91332–06020	BOLT	2					
5	90201–12823	WASHER, PLATE	1					
6	90179–12004	NUT	1					

FIG. 29 STARTING MOTOR

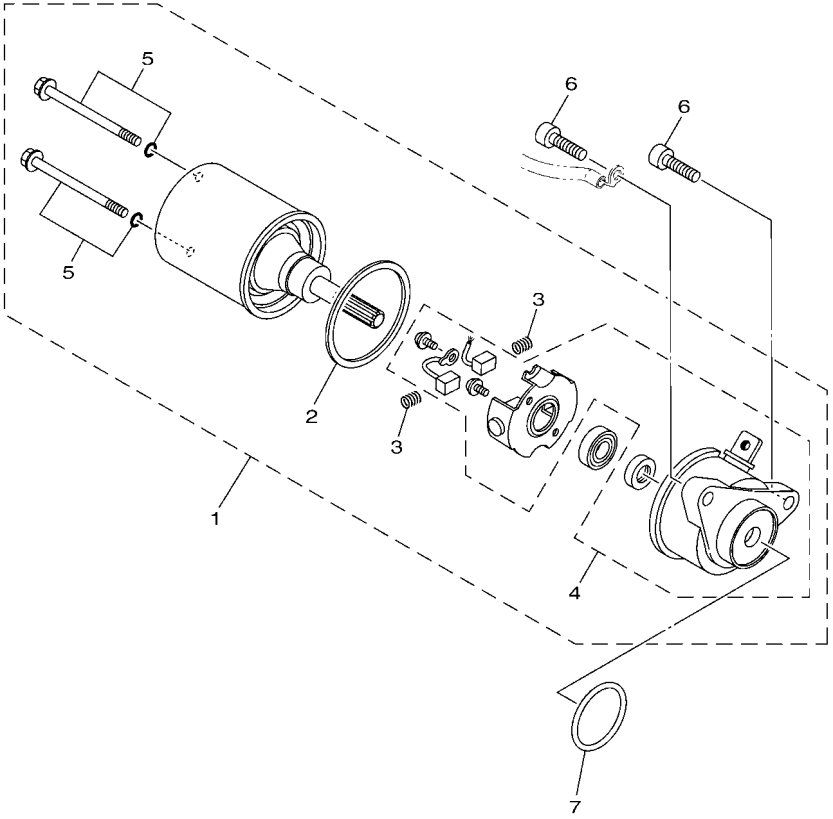

2SX1460-P290

REF. NO.	PART NO.	DESCRIPTION	B926					REMARKS
1	2SX–H1890–00	MOTOR ASSY	1					
2	1KP–H1847–00	.O-RING	1					
3	1KP–H1617–00	.SPRING, BRUSH	2					
4	2SX–H1830–00	.FRONT BRACKET ASSY	1					
5	2SX–H1828–00	.BOLT 2	2					
6	91332–06020	BOLT	2					
7	93210–29803	O-RING	1					

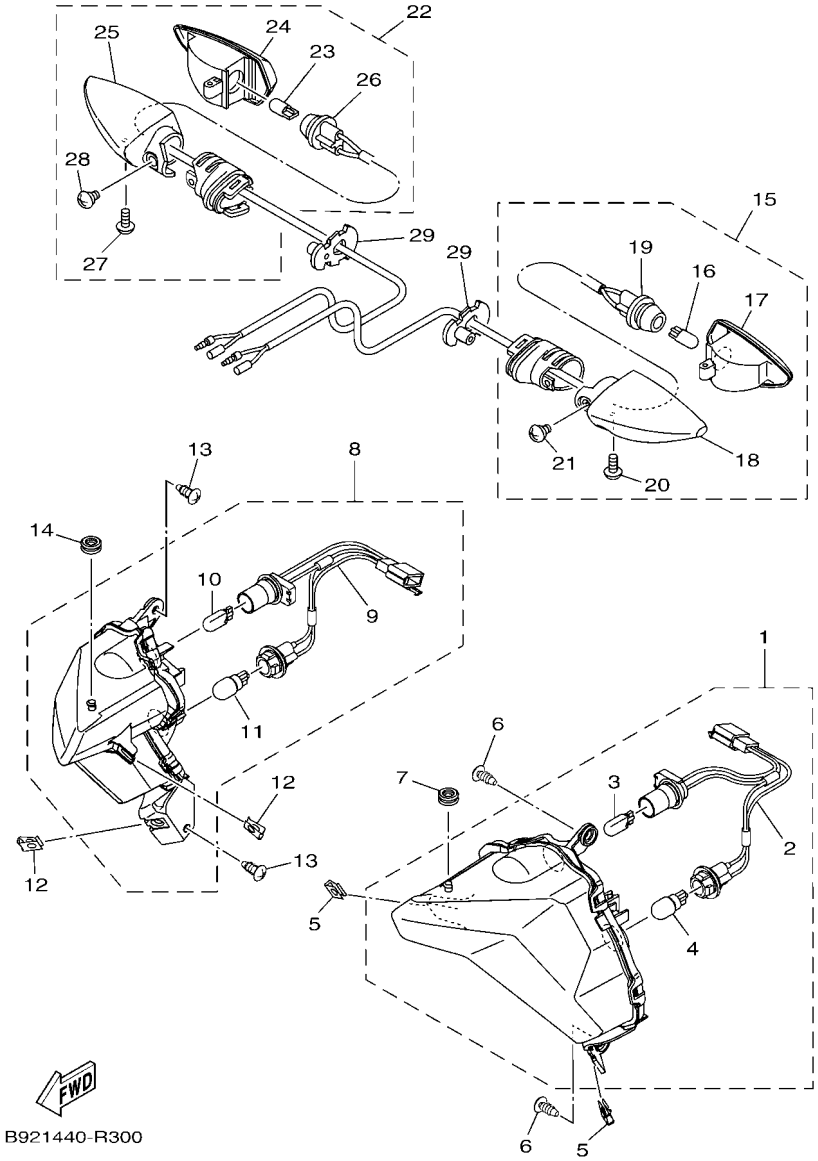

FIG. 30 FLASHER LIGHT

REF. NO.	PART NO.	DESCRIPTION	B926					REMARKS
1	2SX–H3310–02	FRONT FLASHER LIGHT ASSY 1	1					
2	2SX–H331E–00	.CORD ASSY	1					
3	2DP–H4347–00	.BULB (12V-5W)	1					
4	2SX–H3311–00	.BULB, FLASHER (12V-10W)	1					
5	90183–05807	NUT, SPRING	2					
6	97707–50016	SCREW, TRUSS HEAD TAPPING	2					
7	55C–H4759–00	GROMMET	1					
8	2SX–H3320–02	FRONT FLASHER LIGHT ASSY 2	1					
9	2SX–H331E–00	.CORD ASSY	1					
10	2DP–H4347–00	.BULB (12V-5W)	1					
11	2SX–H3311–00	.BULB, FLASHER (12V-10W)	1					
12	90183–05807	NUT, SPRING	2					
13	97707–50016	SCREW, TRUSS HEAD TAPPING	2					
14	55C–H4759–00	GROMMET	1					
15	55D–H3330–01	REAR FLASHER LIGHT ASSY 1	1					
16	55D–H3311–00	.BULB, FLASHER (12V-10W)	1					
17	55D–H333A–00	.LENS COMP 1	1					
18	55D–H3323–00	.BODY	1					
19	55D–H333E–01	.CORD ASSY	1					
20	55D–H3333–00	.SCREW, LENS FITTING	1					
21	55D–H3358–00	.SCREW, SPECIAL	1					
22	55D–H3340–01	REAR FLASHER LIGHT ASSY 2	1					
23	55D–H3311–00	.BULB, FLASHER (12V-10W)	1					
24	55D–H334A–00	.LENS COMP 2	1					
25	55D–H332M–00	.BODY 2	1					
26	55D–H334E–01	.CORD ASSY	1					
27	55D–H3333–00	.SCREW, LENS FITTING	1					

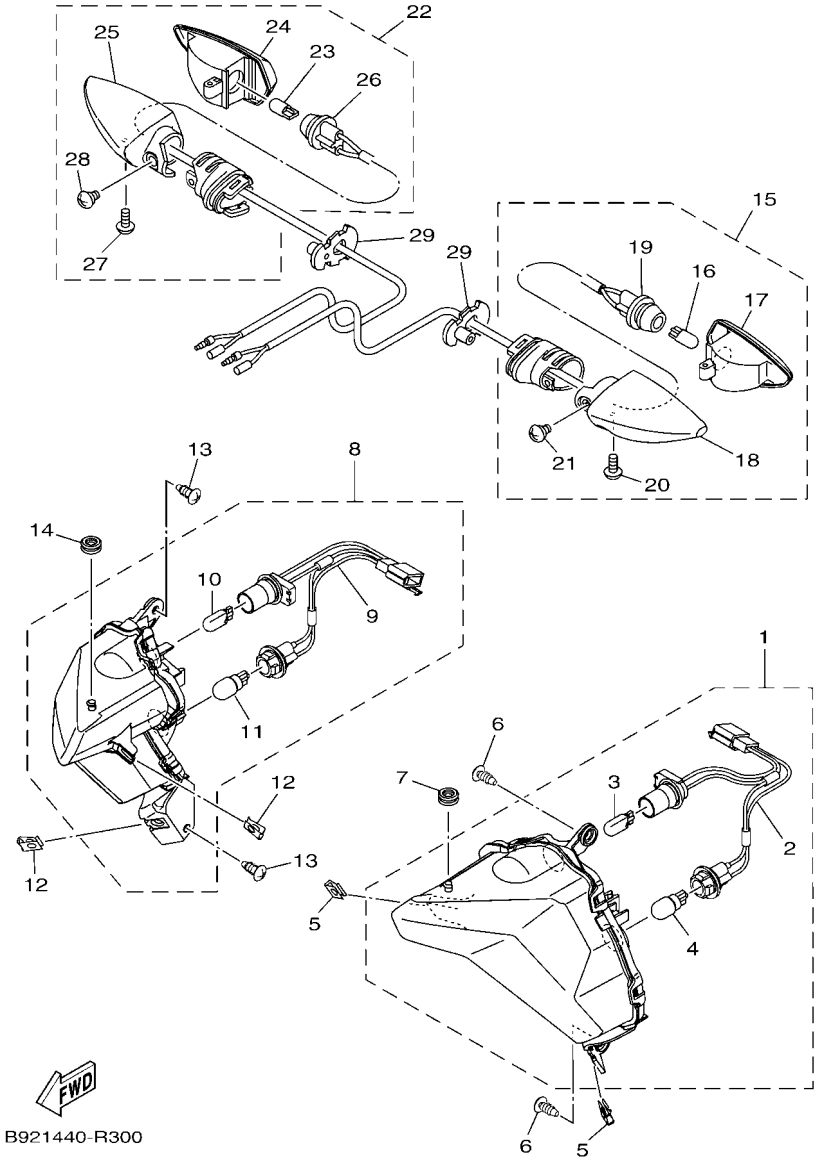

FIG. 30 FLASHER LIGHT

REF. NO.	PART NO.	DESCRIPTION	B926					REMARKS
28	55D–H3358–00	.SCREW, SPECIAL	1					
29	1VP–H3318–00	STAY, FLASHER 1	2					

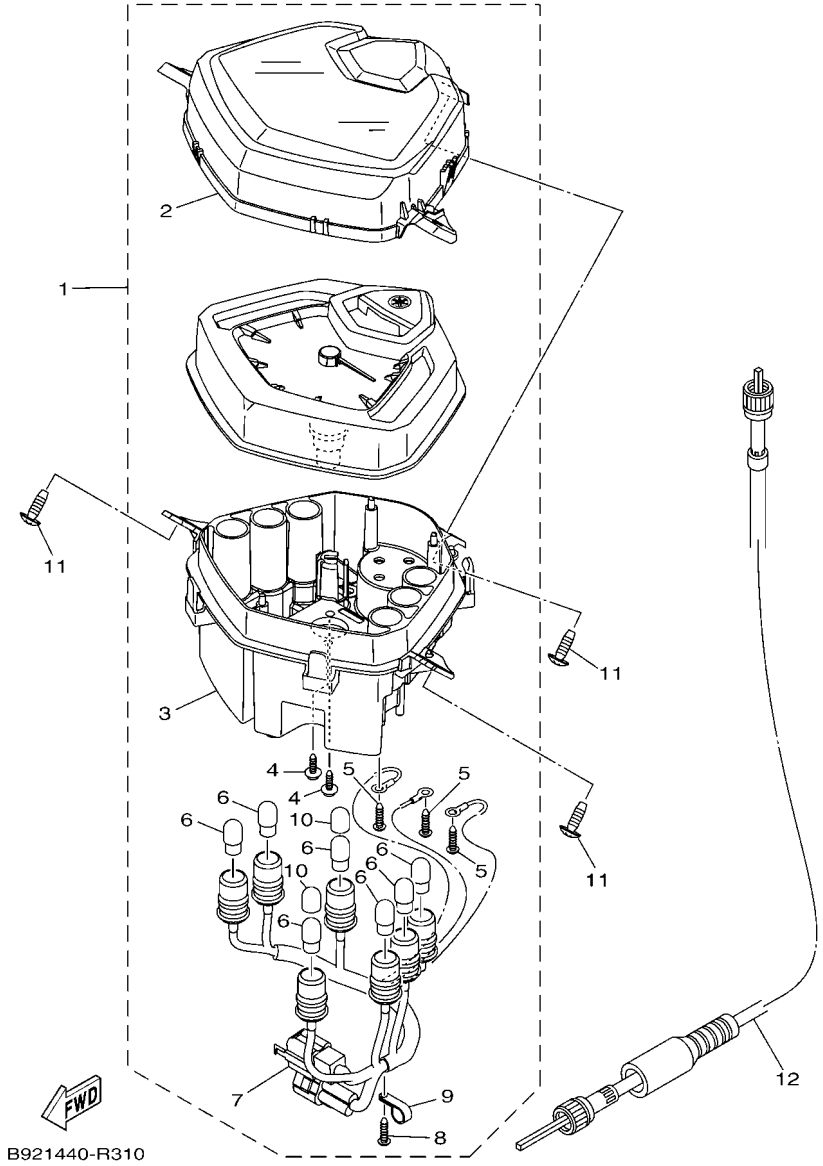

FIG. 31 METER

REF. NO.	PART NO.	DESCRIPTION	B926					REMARKS
1	B92–H3510–10	SPEEDOMETER ASSY	1					
2	B92–H3511–00	.LENS, SPEEDOMETER	1					
3	B92–H3572–00	.CASE, SPEEDOMETER LOWER	1					
4	1VP–H3358–00	.SCREW, SPECIAL	2					
5	1VP–H3645–00	.SCREW	3					
6	5LW–H3518–00	.BULB, METER (T10 12V-1.7W)	7					
7	B92–H3509–10	.SOCKET CORD ASSY	1					
8	97702–40012	.SCREW, TAPPING	1					
9	B92–H357E–00	.CLAMP	1					
10	1VP–H3606–00	.CAP, BULB	2					
11	97707–50016	SCREW, TRUSS HEAD TAPPING	3					
12	2BR–H3550–00	SPEEDOMETER CABLE ASSY	1					

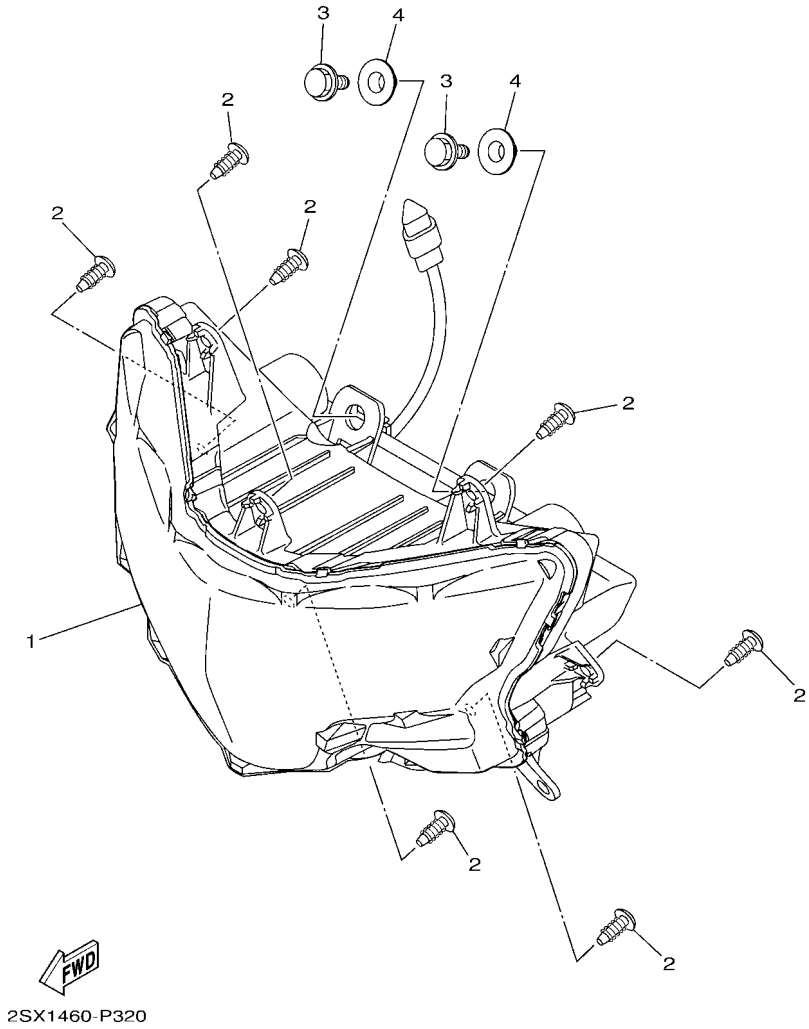

FIG. 32 HEADLIGHT

REF. NO.	PART NO.	DESCRIPTION	B926					REMARKS
1	B92–H4300–00	HEADLIGHT ASSY	1					
2	97707–50016	SCREW, TRUSS HEAD TAPPING	7					
3	90119–06044	BOLT, WITH WASHER	2					
4	90387–07023	COLLAR	2					

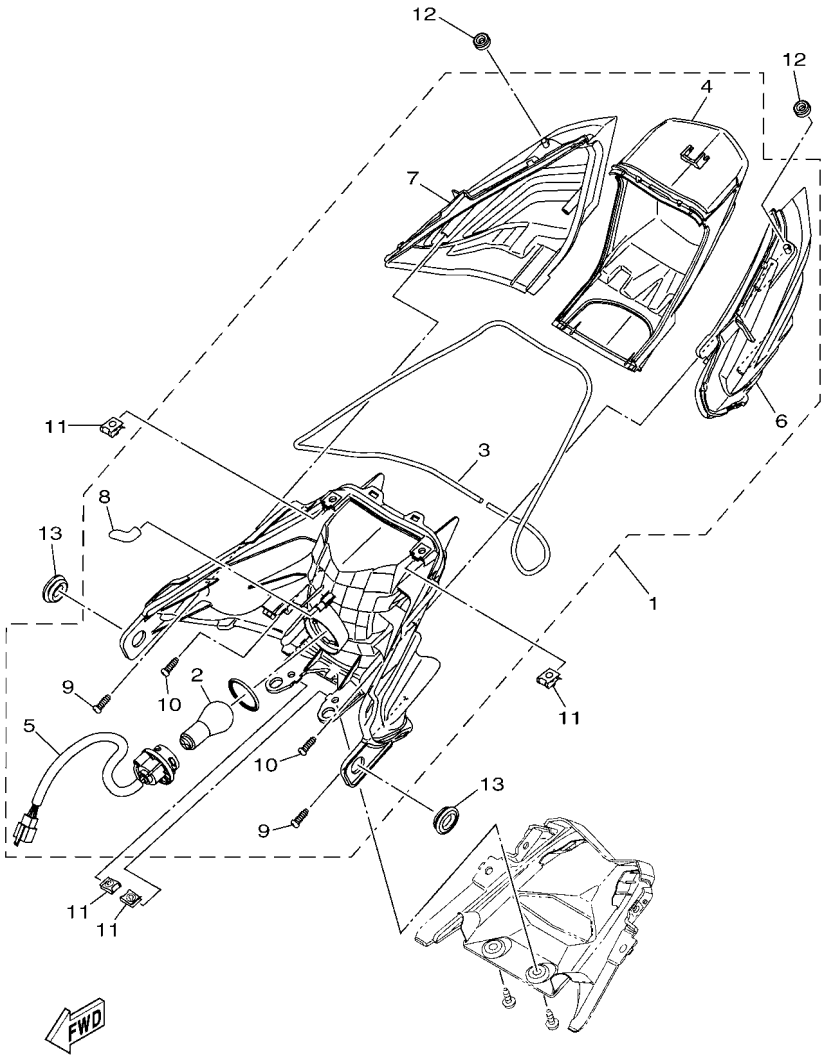

B921440-R330

FIG. 33 TAILLIGHT

REF. NO.	PART NO.	DESCRIPTION	B926					REMARKS
1	B92–H4710–00	TAILLIGHT UNIT ASSY	1					
2	1VP–H4714–00	.BULB, TAILLIGHT (12V-21/5W)	1					
3	B92–H4723–00	.GASKET, TAIL LENS	1					
4	B92–H4721–00	.LENS, TAILLIGHT	1					
5	B92–H4735–00	.SOCKET CORD ASSY	1					
6	B92–H4516–00	.COVER, TAILLIGHT	1					
7	B92–H4716–00	.COVER, TAILLIGHT	1					
8	55C–H3365–00	.CAP	1					
9	97707–40616	.SCREW, TAPPING	2					
10	97707–30616	.SCREW, TAPPING	2					
11	90183–05807	NUT, SPRING	4					
12	55C–H4759–00	GROMMET	2					
13	90480–01559	GROMMET	2					

FIG. 34 HANDLE SWITCH & LEVER

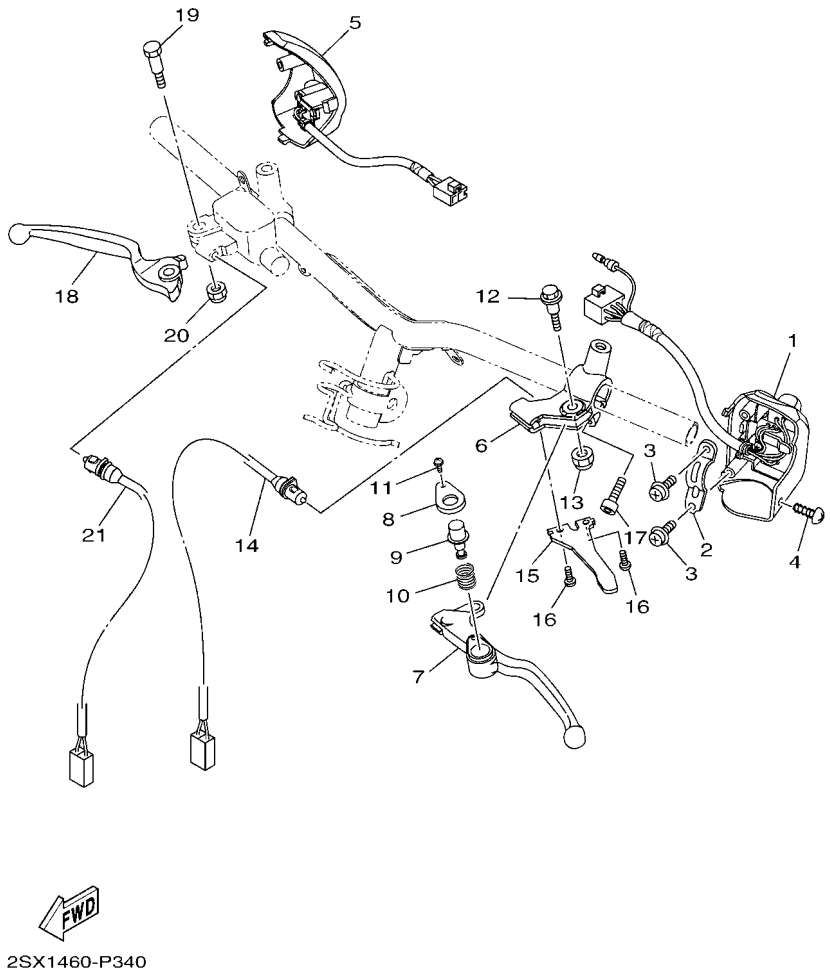

REF. NO.	PART NO.	DESCRIPTION	B926					REMARKS
1	2SX–H3973–00	SWITCH, HANDLE 3	1					
2	1S8–H3955–01	BRACKET 1	1					
3	97602–05216	SCREW, PAN HEAD WITH WASHER	2					
4	97707–50016	SCREW, TRUSS HEAD TAPPING	1					
5	1KP–H3976–00	SWITCH, HANDLE 1	1					
6	1LB–H2911–20	HOLDER, LEVER 1	1					
7	1LB–H3912–00	LEVER 1	1					
8	1LB–H3935–00	COVER	1					
9	1LB–H3967–00	PIN, LOCK 1	1					
10	40D–H3962–00	SPRING	1					
11	40D–H396X–00	SCREW, LEVER FITTING	1					
12	90109–06798	BOLT	1					
13	95602–06100	NUT, SELF-LOCKING	1					
14	1LB–H3980–00	FRONT STOP SWITCH ASSY	1					
15	1LB–H2556–00	DAMPER, STOPPER	1					
16	98502–05010	SCREW, PAN HEAD	2					
17	91332–06020	BOLT	1					
18	2SX–H3922–00	LEVER 2	1					
19	90109–06255	BOLT	1					
20	95602–06100	NUT, SELF-LOCKING	1					
21	54P–H3980–00	FRONT STOP SWITCH ASSY	1					

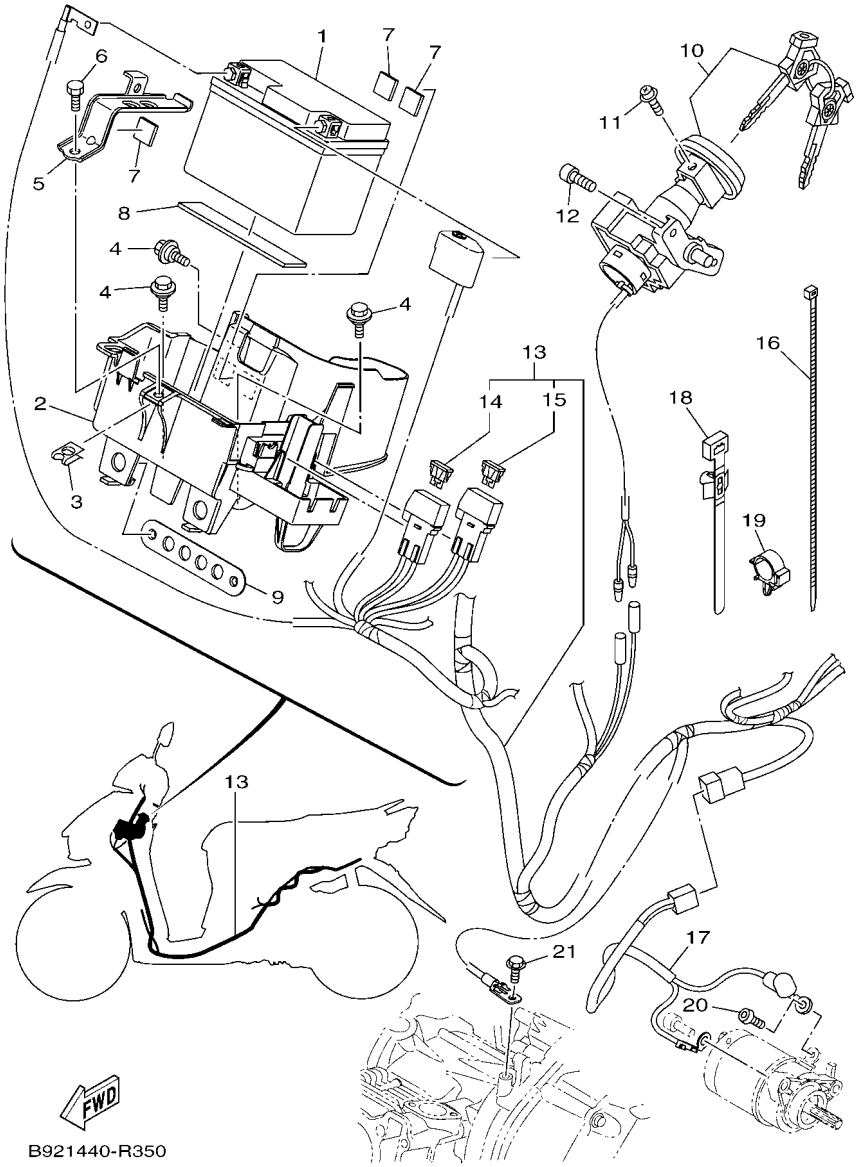

FIG. 35 ELECTRICAL 1

REF. NO.	PART NO.	DESCRIPTION	B926					REMARKS
1	2CB–H2100–01	BATTERY ASSY (YUASA YTZ4V)	1					UR
	55D–H2100–00	BATTERY ASSY (PINACO PTZ5S)	1					UR
2	2SX–H212B–00	BOX, BATTERY 1	1					
3	90183–06821	NUT, SPRING	1					
4	90109–06220	BOLT	3					
5	2BR–H2136–00	PLATE, BATTERY FITTING	1					
6	97002–06016	BOLT, HEXAGON	1					
7	90520–03801	DAMPER, PLATE	3					
8	90520–03828	DAMPER, PLATE	1					
9	B92–H4318–00	STAY, HEADLIGHT 1	1					
10	1VB–XH250–01	MAIN SW. STRG. LOCK SUB ASSY	1					
11	97602–05208	SCREW, PAN HEAD WITH WASHER	1					
12	90149–06309	SCREW	2					
13	B92–H2590–00	WIRE HARNESS ASSY	1					
14	1VP–H2151–00	.FUSE (15A)	1					
15	B92–H2151–00	.FUSE	1					
16	90464–70800	CLAMP	1					
17	B92–H183G–00	CORD COMP.	1					
18	90464–34002	CLAMP	1					
19	90464–16006	CLAMP	1					
20	92012–05008	BOLT, BUTTON HEAD	1					
21	95E32–06012	BOLT, FLANGE DEEP RECESS	1					

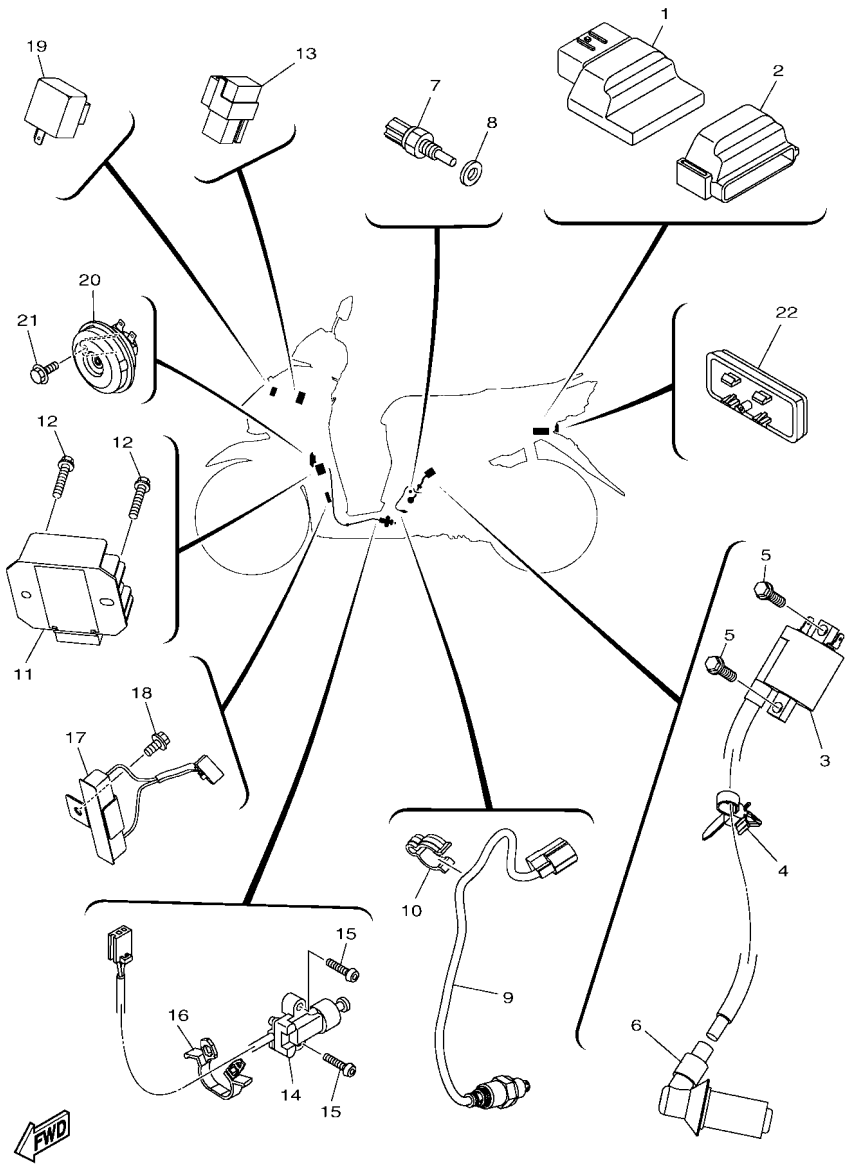

B926440-Y360

FIG. 36 ELECTRICAL 2

REF. NO.	PART NO.	DESCRIPTION	B926					REMARKS
1	B92–H591A–00	ENGINE CONTROL UNIT ASSY	1					
2	B3B–H2155–00	BAND	1					
3	2PH–H2310–01	IGNITION COIL ASSY	1					
4	90464–12810	CLAMP	1					
5	95E32–06020	BOLT, FLANGE DEEP RECESS	2					
6	2PH–H2370–10	PLUG CAP ASSY	1					
7	52B–H3591–00	THERMO UNIT	1					
8	90430–10806	GASKET	1					
9	2DP–H592A–20	SENSOR, OXYGEN	1					
10	90464–16807	CLAMP	1					
11	2BL–H1960–10	RECTIFIER & REGULATOR ASSY	1					
12	95E32–06025	BOLT, FLANGE DEEP RECESS	2					
13	2PH–H1940–02	STARTER RELAY ASSY	1					
14	1LB–H2566–01	SWITCH, SIDE STAND	1					
15	91312–05016	BOLT, HEXAGON SOCKET HEAD	2					
16	90464–07805	CLAMP	1					
17	2SX–H5370–00	RESISTOR ASSY	1					
18	95E32–06010	BOLT, FLANGE DEEP RECESS	1					
19	5D9–H3350–00	FLASHER RELAY ASSY	1					
20	2PH–H3371–00	HORN	1					
21	95D02–06010	BOLT, FLANGE DEEP RECESS	1					
22	55D–H5130–00	REAR REFLECTOR ASSY	1					

PART NO.	REF. NO.
1PM–14216–00	7 – 19
5LW–15659–01	10 – 6
36Y–2589H–00	25 – 8
B92–E1102–00	1 – 1
2PH–E111F–00	4 – 4
2BM–E111G–00	1 – 12
2PH–E112F–00	4 – 5
1DR–E1133–10	1 – 2
2PH–E1165–00	1 – 8
2SX–E1166–10	7 – 36
2PH–E1166–11	7 – 36
2PH–E1169–00	1 – 9
2PH–E1169–10	1 – 9
2BL–E1181–00	1 – 16
2BM–E1191–00	1 – 7
2PH–E1191–00	1 – 7
2BM–E1193–00	1 – 13
2PH–E119E–10	1 – 11
2PH–E1311–10	1 – 20
2PH–E1351–10	1 – 21
B92–E1400–00	2 – 1
B92–E1400–10	2 – 1
B92–E1400–20	2 – 1
B92–E1422–00	2 – 5
2PH–E1422–10	2 – 5
2PH–E1422–20	2 – 5
2PH–E1603–10	2 – 13
2PH–E1631–00	2 – 10
2PH–E1633–00	2 – 11
2PH–E1651–20	2 – 4
2BM–E1681–10	2 – 2
2PH–E2111–00	3 – 1
54P–E2113–00	3 – 4
1KP–E2117–00	3 – 6
54P–E2117–00	3 – 6
5TL–E2118–00	3 – 5
54P–E2119–00	3 – 3
2PH–E2121–10	3 – 2
2PH–E2126–00	3 – 7
2PH–E2146–00	3 – 11
2PH–E2151–01	3 – 8
33S–E2159–01	3 – 10
2PH–E2170–00	4 – 1
2PH–E2176–01	4 – 8
2BM–E2210–20	4 – 12
2PH–E2213–10	4 – 14
5MX–E2222–00	4 – 13
52B–E2228–00	4 – 16
54P–E2228–00	4 – 16
54P–E2231–00	4 – 10
2PH–E2241–00	4 – 11
2PH–E2611–10	5 – 10
2PH–E2651–00	5 – 1
2PH–E2652–00	5 – 3
2PH–E2653–00	5 – 4
2PH–E2658–00	5 – 2
2PH–E2659–10	5 – 6
2SX–E2659–10	5 – 6
2PH–E2668–10	5 – 7
2PH–E3300–10	6 – 1
2BM–E3324–10	2 – 8
54P–E3411–00	6 – 5
5LW–E3452–00	2 – 6
BF4–E3475–00	6 – 2
2PH–E3556–10	7 – 3
2PH–E3557–10	7 – 14
5LW–E3569–00	5 – 12
2PH–E3585–10	7 – 1
2PH–E3593–01	7 – 5
2PH–E3595–00	7 – 2
2PH–E3750–01	7 – 17
2PH–E3761–10	7 – 9
5LW–E3769–00	9 – 20
2PH–E3770–10	7 – 8
2PH–E3907–00	19 – 6
54P–E3915–00	19 – 7
54P–E3938–00	7 – 12
2PH–E3971–02	19 – 5
54P–E4137–00	7 – 13
2PH–E4146–00	7 – 20
54P–E4147–00	7 – 10
5CA–E4147–00	7 – 11
2PH–E4411–00	7 – 21
2PH–E4412–00	7 – 22
2PH–E4437–00	7 – 23
4ST–E443E–00	10 – 4
5TL–E443E–00	7 – 30
5TP–E443G–00	7 – 27
2PH–E4450–20	7 – 24
2PH–E4452–00	7 – 26
2PH–E4453–00	7 – 25
B92–E4613–00	8 – 4
BES–E4711–00	8 – 1
BES–E4718–00	8 – 2
2PH–E5113–00	9 – 18
2PH–E5150–00	9 – 1
B92–E5150–00	9 – 1
2PH–E5155–01	9 – 2
2PH–E5191–10	10 – 7
2PH–E5316–00	10 – 13
54P–E5351–01	6 – 4
2PH–E5362–10	9 – 19
5LW–E5363–00	9 – 16
54P–E5371–00	9 – 6
	10 – 3
2PH–E5373–00	9 – 7
2SX–E5373–00	9 – 7
2PH–E5407–00	10 – 16
B92–E5411–00	10 – 1
2PH–E5413–00	10 – 19
2PH–E5417–00	9 – 21
2PH–E5421–02	9 – 34
2PH–E5423–01	9 – 28
2PH–E5451–10	10 – 2
2PH–E5453–10	9 – 24
2PH–E5461–10	9 – 35
2PH–E5471–00	10 – 12
2PH–E5472–00	10 – 14
2PH–E5473–00	10 – 11
2PH–E5495–00	10 – 15
2BM–E5512–00	11 – 4
2PH–E5520–20	11 – 1
1GC–E5521–00	11 – 5
44D–E5521–00	11 – 5
2PH–E5570–00	11 – 2
2PH–E5570–11	11 – 2
1GC–E5598–00	11 – 3
44D–E5598–00	11 – 3
2PH–E5601–10	11 – 6
2BL–E5620–10	11 – 12
2PH–E5630–00	11 – 14
5MX–E5657–00	12 – 33
1GC–E5659–00	10 – 6
5MX–E5673–00	11 – 15
2PH–E5744–00	12 – 22
2PH–E6111–00	13 – 9
2PH–E6111–10	13 – 9
2PH–E6111–20	13 – 9
2PH–E6111–30	13 – 9
2PH–E6523–00	12 – 9
B5D–E6611–00	12 – 25
BJ8–E6620–00	12 – 7
2PH–E6626–00	12 – 8
2PH–E6819–00	12 – 10
2PH–E7211–00	13 – 4
2PH–E7211–10	13 – 4
2PH–E7211–50	13 – 4
2PH–E7410–00	13 – 1
2PH–E7410–10	13 – 1
2PH–E7421–00	13 – 3
2PH–E7421–10	13 – 3
2PH–E7421–40	13 – 3
2PH–E7421–50	13 – 3
B5D–E7465–00	12 – 13
2PH–E7465–10	12 – 14
B5D–E7465–30	12 – 24
2SX–E7611–11	12 – 6
B5D–E7620–00	12 – 1
2PH–E7623–00	12 – 3
2SX–E7632–10	12 – 2
2PH–E7641–00	12 – 26
2PH–E7644–00	12 – 19
2PH–E7645–10	12 – 31
B5D–E7653–00	12 – 4
BJ8–E7660–10	12 – 11
2PH–E7664–00	12 – 15
2PH–E7668–00	12 – 20
BJ8–E7670–00	12 – 12
B5D–E7674–00	12 – 5
2PH–E7674–10	12 – 16
B5D–E7678–00	12 – 21
B5D–E7678–10	12 – 23
B5D–E7683–00	12 – 17
2PH–E7684–00	12 – 18
B92–F1110–00	14 – 1
2PH–F1410–20	14 – 3
54P–F1459–00	14 – 5
B92–F1511–00–3E	15 – 1
B92–F1511–00–P9	15 – 1
B92–F1511–00–PA	15 – 1
15K–F1518–00	15 – 3
B92–F1518–00	18 – 34
2SX–F1552–01	27 – 16
B92–F1568–00	27 – 33
B92–F1611–10	15 – 4
B92–F1621–01	15 – 6
B92–F1668–00	27 – 34
B92–F1711–00–P6	16 – 3
B92–F171E–00	16 – 15
B92–F1721–00–P6	16 – 5
2SX–F172W–00	16 – 1
B92–F172X–00	16 – 23
B92–F1731–00	16 – 7
B92–F1737–00	24 – 34
B92–F1741–00	16 – 10
B92–F174J–D0	16 – 17
B92–F174J–E0	16 – 17
B92–F174J–F0	16 – 17
B92–F174K–D0	16 – 18
B92–F174K–E0	16 – 18
B92–F174K–F0	16 – 18
B92–F179J–D0	16 – 19
B92–F179J–E0	16 – 19
B92–F179J–F0	16 – 19
B92–F179K–D0	16 – 20
B92–F179K–E0	16 – 20
B92–F179K–F0	16 – 20
54P–F2141–00	14 – 8
10C–F2210–30	17 – 1
5MX–F2216–00	9 – 4
B92–F2865–00–3E	27 – 4
B92–F2865–00–PA	27 – 4
B92–F2865–00–PB	27 – 4
B92–F3100–00	18 – 1
B92–F3110–00	18 – 8
1FC–F3111–10	18 – 19
B92–F3126–00	18 – 5
B92–F3136–00	18 – 2
31B–F313B–00	27 – 28
B92–F3141–00	18 – 15
5LL–F3144–00	18 – 14
4UV–F3145–00	18 – 3
	18 – 6
2JG–F3147–00	18 – 20
5TF–F3152–00	18 – 11
31D–F3153–00	18 – 21
5P0–F3156–00	18 – 4
	18 – 7
2JG–F3157–00	18 – 10
509–F3158–L0	18 – 12
B92–F3170–00	18 – 9
31D–F3181–50	18 – 13
B92–F3340–00	18 – 16
4D0–F3346–00	18 – 18
B92–F3391–00–P2	27 – 1
4FP–F3411–10	18 – 17
4RT–F3411–10	18 – 25
1KL–F3412–10	18 – 22
4RT–F3412–10	18 – 24
54P–F3415–00	18 – 28
2WB–F3416–00	18 – 27
1P6–F341E–10	18 – 26
5VL–F341E–10	18 – 23
B92–F4110–00	19 – 1
5D9–F414G–00	14 – 2
	19 – 3
B92–F414G–00	19 – 13
54P–F414G–10	19 – 9
5D9–F414G–10	19 – 2
B92–F41B1–01	19 – 12
B92–F4491–00	19 – 10
4YY–F4610–00	19 – 17
4YY–F4612–00	19 – 18
2SX–F470F–01	20 – 2
2WB–F4727–00	20 – 10
B92–F472T–01	20 – 20
2SX–F4730–02	20 – 1
2SX–F473R–00	20 – 5
3C1–F4741–00	20 – 3
5BP–F4741–00	20 – 4
B92–F474A–00–3E	20 – 16
B92–F474A–00–P0	20 – 16
B92–F474A–00–P6	20 – 16
B92–F474W–00–3E	20 – 18
B92–F474W–00–P0	20 – 18
B92–F474W–00–P6	20 – 18
1S8–F4768–00	20 – 13
40D–F4780–01	20 – 11
2SX–F478E–10	20 – 14
2SX–F482H–01	20 – 8
1VB–F5168–00–33	21 – 1
2SX–F5181–00	21 – 8
5TL–F5190–01	21 – 10
5LW–F530K–00	23 – 7
1GC–F5326–00	23 – 4
54P–F5326–00	23 – 4
44P–F5338–00–33	23 – 1
5LW–F533A–00	23 – 12
10C–F5351–00	23 – 10
B92–F5355–00	23 – 11
2BM–F5802–00	22 – 4
5YP–F5803–50	22 – 5
2BM–F5805–00	22 – 9
5P0–F580A–00	25 – 5
2SX–F580U–10	22 – 3
5TL–F582U–10	22 – 1
5P0–F583T–04	25 – 4
5P0–F5852–00	25 – 7

PART NO.	REF. NO.
5P0–F5854–00	25 – 6
5P0–F5855–00	25 – 10
5TL–F5867–01	25 – 9
2SX–F5872–00	25 – 1
B92–F5875–00	18 – 30
B92–F5876–00	18 – 32
2BM–F5917–00	22 – 6
2BM–F5919–00	22 – 11
5YP–F5924–10	22 – 12
5YP–F5925–01	22 – 10
5YP–F5937–00	22 – 7
2SX–F6110–00	24 – 1
B92–F6113–00	24 – 2
B92–F6143–00–3E	24 – 6
B92–F6143–00–P9	24 – 6
B92–F6143–00–PA	24 – 6
2SX–F6145–00	24 – 9
B92–F6240–00	24 – 15
1VP–F6241–00	24 – 16
B92–F6246–00	24 – 17
B92–F6257–00	24 – 25
	26 – 17
2WB–F6280–00	24 – 18
55D–F6281–00	24 – 31
55D–F6282–00	24 – 32
2WB–F6290–00	24 – 19
2SX–F6301–10	24 – 20
2SX–F6351–00	24 – 23
B92–F637G–00	24 – 24
B92–F7111–00	26 – 1
2PH–F7112–00	26 – 2
2PH–F7114–00	14 – 6
1GC–F7121–00	9 – 3
54P–F7121–00	9 – 3
5LW–F7254–00	26 – 5
B92–F7267–00	26 – 6
B92–F7311–00	26 – 12
B92–F7430–00	26 – 18
B92–F7431–00	26 – 19
B92–F7432–00	26 – 20
B92–F7440–00	26 – 26
B92–F7441–00	26 – 27
B92–F7442–00	26 – 28
2SX–F7481–00	26 – 7
1VB–F8100–00	20 – 21
B92–F8257–00	27 – 11
2SX–F8300–00	27 – 10
2SX–F8311–00	27 – 7

PART NO.	REF. NO.
B92–F8345–00–3E	27 – 18
B92–F8345–00–P8	27 – 18
B92–F8345–00–PA	27 – 18
B92–F8346–00–3E	27 – 23
B92–F8346–00–P8	27 – 23
B92–F8346–00–PA	27 – 23
2SX–F835U–00	27 – 21
2SX–F835V–00	27 – 26
B92–F8373–00	27 – 12
B92–F8385–00	27 – 14
B92–F8391–D0	27 – 29
B92–F8391–E0	27 – 29
B92–F8391–F0	27 – 29
B92–F8392–D0	27 – 30
B92–F8392–E0	27 – 30
B92–F8392–F0	27 – 30
B92–F8393–D0	27 – 31
B92–F8393–E0	27 – 31
B92–F8393–F0	27 – 31
B92–F8394–A0	27 – 32
B92–F8394–B0	27 – 32
B92–F8394–C0	27 – 32
2PH–H1410–10	28 – 2
2PH–H1450–20	28 – 1
1KP–H1617–00	29 – 3
2SX–H1828–00	29 – 5
2SX–H1830–00	29 – 4
B92–H183G–00	35 – 17
1KP–H1847–00	29 – 2
2SX–H1890–00	29 – 1
2PH–H1940–02	36 – 13
2BL–H1960–10	36 – 11
55D–H2100–00	35 – 1
2CB–H2100–01	35 – 1
5D9–H2126–00	19 – 14
2SX–H212B–00	35 – 2
2BR–H2136–00	35 – 5
1VP–H2151–00	35 – 14
B92–H2151–00	35 – 15
B3B–H2155–00	36 – 2
2PH–H2310–01	36 – 3
2PH–H2370–10	36 – 6
1LB–H2556–00	34 – 15
1LB–H2566–01	36 – 14
B92–H2590–00	35 – 13
1LB–H2911–20	34 – 6
2SX–H3310–02	30 – 1
2SX–H3311–00	30 – 4

PART NO.	REF. NO.
2SX–H3311–00	30 – 11
55D–H3311–00	30 – 16
	30 – 23
1VP–H3318–00	30 – 29
2SX–H331E–00	30 – 2
	30 – 9
2SX–H3320–02	30 – 8
55D–H3323–00	30 – 18
55D–H332M–00	30 – 25
55D–H3330–01	30 – 15
55D–H3333–00	30 – 20
	30 – 27
55D–H333A–00	30 – 17
55D–H333E–01	30 – 19
55D–H3340–01	30 – 22
55D–H334A–00	30 – 24
55D–H334E–01	30 – 26
5D9–H3350–00	36 – 19
1VP–H3358–00	31 – 4
55D–H3358–00	30 – 21
	30 – 28
55C–H3365–00	33 – 8
2PH–H3371–00	36 – 20
B92–H3509–10	31 – 7
B92–H3510–10	31 – 1
B92–H3511–00	31 – 2
5LW–H3518–00	31 – 6
2BR–H3550–00	31 – 12
B92–H3559–00–P2	24 – 12
B92–H3572–00	31 – 3
B92–H357E–00	31 – 9
52B–H3591–00	36 – 7
1VP–H3606–00	31 – 10
1VP–H3645–00	31 – 5
1LB–H3912–00	34 – 7
2SX–H3922–00	34 – 18
1LB–H3935–00	34 – 8
1S8–H3955–01	34 – 2
40D–H3962–00	34 – 10
1LB–H3967–00	34 – 9
40D–H396X–00	34 – 11
2SX–H3973–00	34 – 1
1KP–H3976–00	34 – 5
1LB–H3980–00	34 – 14
54P–H3980–00	34 – 21
B92–H4300–00	32 – 1
B92–H4318–00	35 – 9
2DP–H4347–00	30 – 3

PART NO.	REF. NO.
2DP–H4347–00	30 – 10
B92–H4516–00	33 – 6
B92–H4710–00	33 – 1
1VP–H4714–00	33 – 2
B92–H4716–00	33 – 7
B92–H4721–00	33 – 4
B92–H4723–00	33 – 3
B92–H4735–00	33 – 5
55C–H4759–00	30 – 7
	30 – 14
	33 – 12
2FC–H5111–00	15 – 8
55D–H5130–00	36 – 22
2SX–H5370–00	36 – 17
2PH–H5752–00	19 – 8
2PH–H5885–01	7 – 18
B92–H591A–00	36 – 1
2DP–H592A–20	36 – 9
4C9–W0048–00	22 – 8
1VB–XH250–01	35 – 10
90101–06046	23 – 14
90101–08847	26 – 13
90105–07801	4 – 7
90105–088H4	17 – 2
90105–10831	22 – 13
90105–10896	24 – 4
90105–108B2	14 – 7
90109–06220	35 – 4
90109–06255	34 – 19
90109–06798	34 – 12
90109–068B4	20 – 6
90109–068B5	15 – 2
	15 – 5
	26 – 10
90110–06846	7 – 16
90110–06868	1 – 19
90111–06811	8 – 3
90111–06865	27 – 13
90111–08853	22 – 2
90116–08843	9 – 11
90119–06044	32 – 3
90119–06155	19 – 4
90149–05801	1 – 10
90149–06309	35 – 12
90159–06810	16 – 16
90170–05803	3 – 9
90170–12800	12 – 35
90170–12803	12 – 30

PART NO.	REF. NO.
90179–06411	24 – 29
90179–12004	28 – 6
90179–25002	18 – 29
90183–05807	15 – 7
	16 – 4
	16 – 6
	16 – 9
	16 – 12
	16 – 24
	20 – 7
	24 – 3
	24 – 7
	24 – 10
	24 – 13
	26 – 9
	27 – 2
	27 – 5
	27 – 19
	27 – 24
	30 – 5
	30 – 12
	33 – 11
90183–06821	35 – 3
90185–05803	15 – 9
90185–10011	24 – 5
90185–16800	23 – 15
90201–10065	17 – 5
90201–10118	25 – 3
90201–10831	14 – 10
90201–12028	17 – 4
90201–12823	28 – 5
90201–154E8	11 – 9
90201–15700	12 – 36
90201–16810	23 – 16
90201–16815	12 – 37
90201–220J8	23 – 17
90206–14093	23 – 13
90208–12808	12 – 34
90249–12008	24 – 30
90269–06816	19 – 16
90280–03017	2 – 9
90340–12816	9 – 12
90380–10803	12 – 28
90380–15811	11 – 8
90387–05820	16 – 13
90387–064W3	7 – 31
90387–07023	32 – 4
90387–08820	26 – 14

PART NO.	REF. NO.
90387–10277	21 – 7
90388–08803	9 – 4
90388–10800	14 – 4
90388–10805	9 – 5
90401–10812	25 – 2
90430–06803	1 – 5
	9 – 15
90430–10806	36 – 8
90430–12803	9 – 13
90450–46803	7 – 34
90464–07805	36 – 16
90464–12810	36 – 4
90464–16006	35 – 19
90464–16807	36 – 10
90464–34002	35 – 18
90464–70800	35 – 16
90467–110A3	10 – 5
90467–11825	9 – 8
90467–12807	7 – 28
90467–13808	7 – 37
90467–13858	7 – 38
90480–01559	33 – 13
90480–13013	7 – 32
90501–12743	26 – 21
	26 – 29
90501–16003	24 – 28
90501–16004	6 – 6
90506–12001	23 – 8
90506–15001	23 – 9
90506–20514	26 – 16
90506–35821	26 – 4
90508–32768	11 – 7
90520–02819	27 – 8
90520–03801	35 – 7
90520–03828	35 – 8
90520–05819	5 – 5
90520–08004	26 – 8
90520–08812	19 – 19
90520–10825	7 – 33
90560–10292	21 – 2
91312–05016	36 – 15
91312–06012	4 – 6
91312–06025	25 – 11
91332–05010	19 – 11
91332–06020	28 – 3
	28 – 4
	29 – 6
	34 – 17

PART NO.	REF. NO.
91332–06025	11 – 13
91401–25015	26 – 24
	26 – 32
91701–08035	26 – 23
	26 – 31
91A20–07065	19 – 15
92012–05008	35 – 20
92012–05010	24 – 22
93102–15801	11 – 11
93102–19814	9 – 22
93102–19817	9 – 22
93102–20815	13 – 12
93102–20816	13 – 12
93102–25816	9 – 29
93102–25819	9 – 29
93102–32801	13 – 6
93102–32809	13 – 6
93106–20808	21 – 3
93210–07802	23 – 6
93210–09806	4 – 2
93210–148H8	9 – 17
93210–16805	12 – 32
93210–29800	6 – 7
93210–29803	29 – 7
93210–35883	7 – 4
93211–07800	9 – 23
93211–47801	9 – 30
93306–001X3	4 – 3
93306–001YE	4 – 3
93306–201YR	13 – 10
93306–201YS	13 – 10
93306–204XT	13 – 11
93306–204XV	13 – 11
93306–252YB	12 – 27
93306–272YA	13 – 5
93306–300YF	21 – 4
93306–303YN	13 – 8
93306–303YS	13 – 8
93306–351Y5	13 – 2
93306–372X5	2 – 7
93310–528YP	2 – 3
93440–10153	1 – 3
93450–14088	2 – 12
93501–04823	26 – 22
	26 – 30
93900–00817	21 – 6
	23 – 3
94107–14808	21 – 5

PART NO.	REF. NO.
94109–14804	23 – 2
94568–J7092	4 – 9
94700–00372	1 – 15
95302–08600	1 – 14
95302–10600	17 – 3
95602–06100	34 – 13
	34 – 20
95602–08200	26 – 15
95602–10200	14 – 9
	21 – 9
95612–08618	1 – 6
95702–08500	8 – 5
95702–10500	23 – 5
95812–06040	9 – 14
95D02–06010	18 – 31
	18 – 35
	36 – 21
95D02–08030	26 – 25
	26 – 33
95D32–06012	18 – 33
95D32–06016	5 – 11
95D32–06020	10 – 17
	20 – 17
	20 – 19
95D32–06025	7 – 15
	7 – 35
95D32–06035	7 – 6
95D32–06045	7 – 7
95D32–06090	10 – 18
95D32–08055	8 – 6
95E32–06010	1 – 4
	10 – 8
	20 – 12
	36 – 18
95E32–06012	35 – 21
95E32–06014	24 – 27
95E32–06020	4 – 15
	5 – 8
	9 – 27
	10 – 21
	36 – 5
95E32–06025	9 – 32
	36 – 12
95E32–06035	9 – 33
	9 – 37
	10 – 10
95E32–06040	24 – 26
95E32–06045	10 – 20

PART NO.	REF. NO.
95E32–06060	9 – 10
95E32–06070	9 – 26
97002–06016	35 – 6
97602–05208	35 – 11
97602–05216	34 – 3
97702–40012	31 – 8
97702–60530	5 – 9
97707–30616	33 – 10
97707–40616	33 – 9
97707–50016	16 – 2
	16 – 8
	16 – 11
	16 – 14
	16 – 25
	20 – 9
	24 – 8
	24 – 11
	24 – 14
	26 – 11
	27 – 3
	27 – 6
	27 – 9
	27 – 15
	27 – 17
	27 – 20
	27 – 22
	27 – 25
	27 – 27
	30 – 6
	30 – 13
	31 – 11
	32 – 2
	34 – 4
97707–50025	7 – 29
98502–05010	34 – 16
98502–05016	24 – 21
98502–05020	6 – 3
98502–05025	24 – 33
98507–05010	20 – 15
99002–09600	26 – 3
99009–15400	11 – 10
99009–25400	13 – 7
99009–35700	12 – 29
99237–00080	16 – 21
	16 – 22
99480–05010	9 – 25
99530–10114	1 – 17
	1 – 18

PART NO.	REF. NO.
99530–10114	9 – 9
	9 – 31
	9 – 36
	10 – 9