YAMAHA

PARTS CATALOGUE

MDNM8

DPBMC

PGD

MTN155 (BHM3) MALAYSIA

YAMAHA GENUINE Parts & Accessories

1XBHM-440E1

( )

MTN155
PARTS CATALOGUE
©2022 by Yamaha Motor Co., Ltd.
1st edition, January 2022
All rights reserved.
Any reprinting or unauthorized use
without the written permission of
Yamaha Motor Co., Ltd.
is expressly prohibited.
Printed in Japan.

FOREWORD

This Parts Catalogue is related to the parts for the model(s) on the cover page. When you are ordering replacement parts, please refer to this Parts Catalogue and quote both part numbers and part names correctly.

1. Modifications or additions which have been made after the issue of the Parts Catalogue will be announced in the Parts News.
   It is advisable that you make the necessary corrections to the Parts Catalogue according to the Parts News.

2. Abbreviations
   The following abbreviations are used in this Parts Catalogue.

   "UR" Use specified parts number.

   "UN" Use as many as needed.

   "AP" Alternate Parts

   "LM" Locally Made (Parts need to be ordered locally)

   "F#" Frame No. (Applicable machine No.)

   "O/S" Over Size

3. The number of components for assembly
   - Parts, which are to be supplied in an assembly, are listed with a dot (.) in front of the part name as shown below.
   - The numeral appearing to the right of each component part indicates the quantity of parts for each assembly unit.

PART NO.	DESCRIPTION	Q'TY	REMARKS
2F5–83310–60	FRONT FLASHER LIGHT ASSY	2	
115–83311–60	.BULB (6V–18W)	1	

4. Applicable colours of graphics are represented in the "REMARKS" as shown below.

PART NO.	DESCRIPTION	Q'TY	REMARKS
2N4–24110–00–X5	FUEL TANK COMP.	2	MXR
3J1–24240–10	.GRAPHIC, FUEL TANK	1	FOR MXR

5. Note that the illustrations for reference in finding parts numbers are not to be used for assembling. When assembling, please use the applicable service manual.

6. The asterisk (*) before a reference number indicates modified items after the first edition.

7. Applicable Serial No.

Frame Serial No.

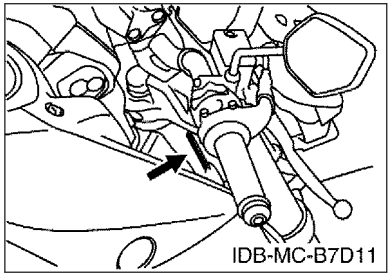

Engine Serial No.

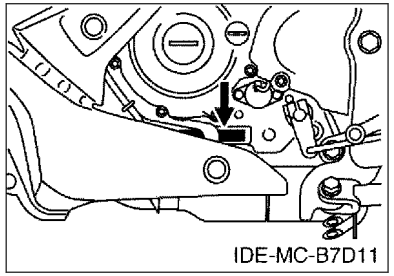

8. Applicable Colour Code (The (*) mark shows Model colour.)

Abbreviation	Colour Name	Colour Code
CS6	CYAN SOLID 6	1754
DPBM15	DEEP PURPLISH BLUE METALLIC 15	1329
DPBMC(*)	DEEP PURPLISH BLUE METALLIC C	0564
LGB	LOW GLOSS BLACK	0098
MBM3	MAT BLUE METALLIC 3	0960
MBNM3	MAT BLUISH GRAY METALLIC 3	1758
MDNM8(*)	MAT DARK GRAY METALLIC 8	1654
PGD(*)	PASTEL DARK GRAY	003E
SM12	BLACK METALLIC 12	1723

9. Applicable Starting Serial No.

Frame Serial No.

Serial No.	Name Of Q'ty Column	Model Code

Engine Serial No.

Serial No.	Name Of Q'ty Column	Model Code

CONTENTS

ENGINE

CYLINDER HEAD....1
CRANKSHAFT & PISTON....2
VALVE....4
CAMSHAFT & CHAIN....5
WATER PUMP....6
RADIATOR & HOSE....7
OIL PUMP....8
INTAKE....9
EXHAUST....11
CRANKCASE....12
CRANKCASE COVER 1....13
STARTER CLUTCH....14
CLUTCH....15
TRANSMISSION....17
SHIFT CAM & FORK....19
SHIFT SHAFT....20

CHASSIS

FRAME....21
FENDER....22
SIDE COVER....24
REAR ARM & SUSPENSION....26
STEERING....27
FRONT FORK....28
FUEL TANK....30
FUEL TANK 2....31
SEAT....34
FRONT WHEEL....35
FRONT BRAKE CALIPER....36
REAR WHEEL....37
REAR BRAKE CALIPER....38
STEERING HANDLE & CABLE....39
FRONT MASTER CYLINDER....40
STAND & FOOTREST....41
REAR MASTER CYLINDER....43
LEG SHIELD....44
GENERATOR....46
STARTING MOTOR....47
FLASHER LIGHT....48
METER....49
HEADLIGHT....50
TAILLIGHT....51
HANDLE SWITCH & LEVER....52
ELECTRICAL 1....53
ELECTRICAL 2....54

INDEX

NUMERICAL INDEX....56

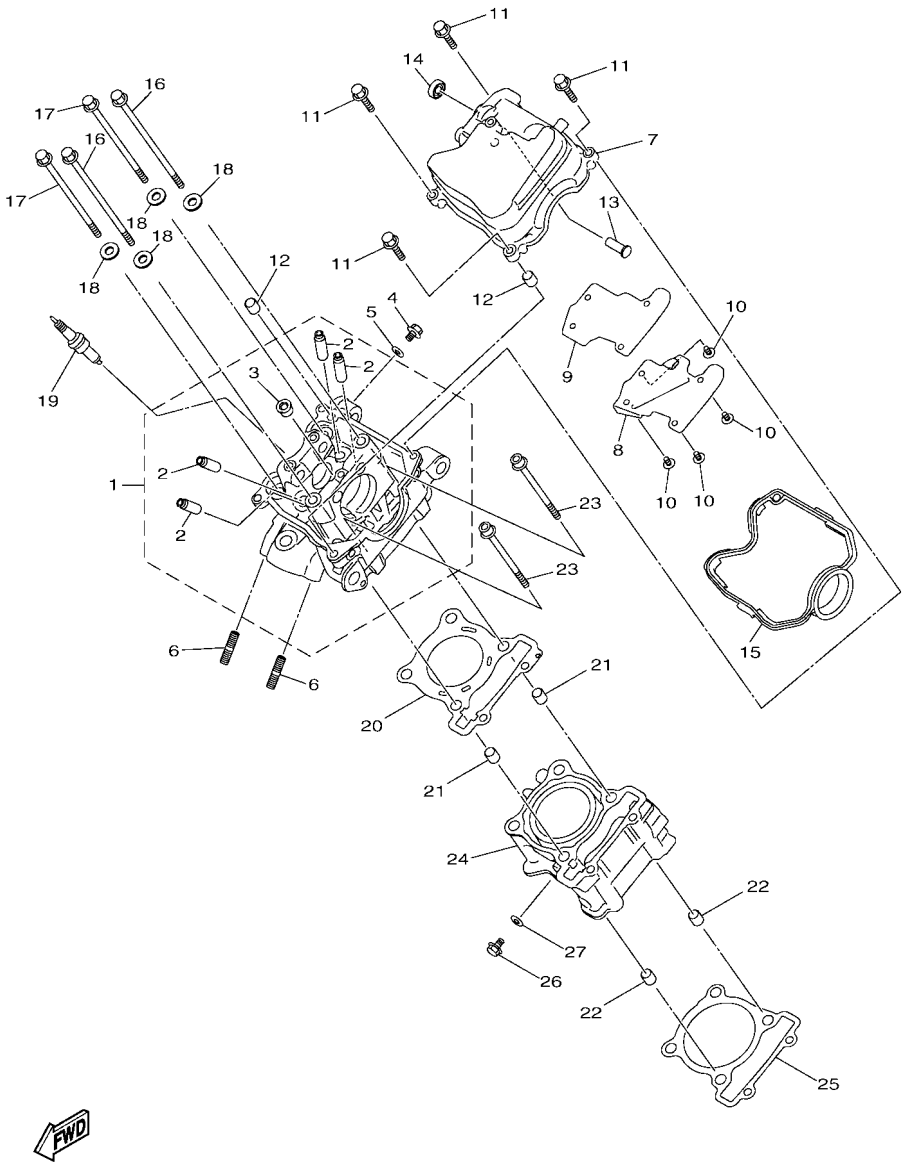

FIG. 1 CYLINDER HEAD

REF. NO.	PART NO.	DESCRIPTION	BHM3					REMARKS
1	B3M–E1102–00	CYLINDER HEAD ASSY	1					
2	2DP–E1133–10	.GUIDE, VALVE 1	4					
3	90340–12813	.PLUG, STRAIGHT SCREW	1					
4	95E32–06010	BOLT, FLANGE DEEP RECESS	1					
5	90430–06803	GASKET	1					
6	95612–08618	BOLT, STUD	2					
7	BK6–E1191–00	COVER, CYLINDER HEAD 1	1					
8	B3M–E1165–00	PLATE, BREATHER	1					
9	2DP–E1169–00	GASKET, BREATHER COVER	1					
10	90149–05801	SCREW	4					
11	95E32–06030	BOLT, FLANGE DEEP RECESS	4					
12	99530–08012	PIN, DOWEL	2					
13	BK6–E132G–00	ROD 1	1					
14	93102–08800	OIL SEAL	1					
15	B3F–E1193–00	GASKET, HEAD COVER 1	1					
16	90105–088J0	BOLT, FLANGE	2					
17	90105–088H9	BOLT, FLANGE	2					
18	90201–08859	WASHER, PLATE	4					
19	94700–00439	PLUG, SPARK (NGK MR8E-9)	1					
20	2DP–E1181–00	GASKET, CYLINDER HEAD 1	1					
21	99530–10114	PIN, DOWEL	2					
22	99530–10114	PIN, DOWEL	2					
23	90110–06894	BOLT, HEXAGON SOCKET HEAD	2					
24	2DP–E1311–10	CYLINDER 1	1					
25	BK6–E1351–00	GASKET, CYLINDER	1					
26	95E32–06010	BOLT, FLANGE DEEP RECESS	1					
27	90430–06803	GASKET	1					

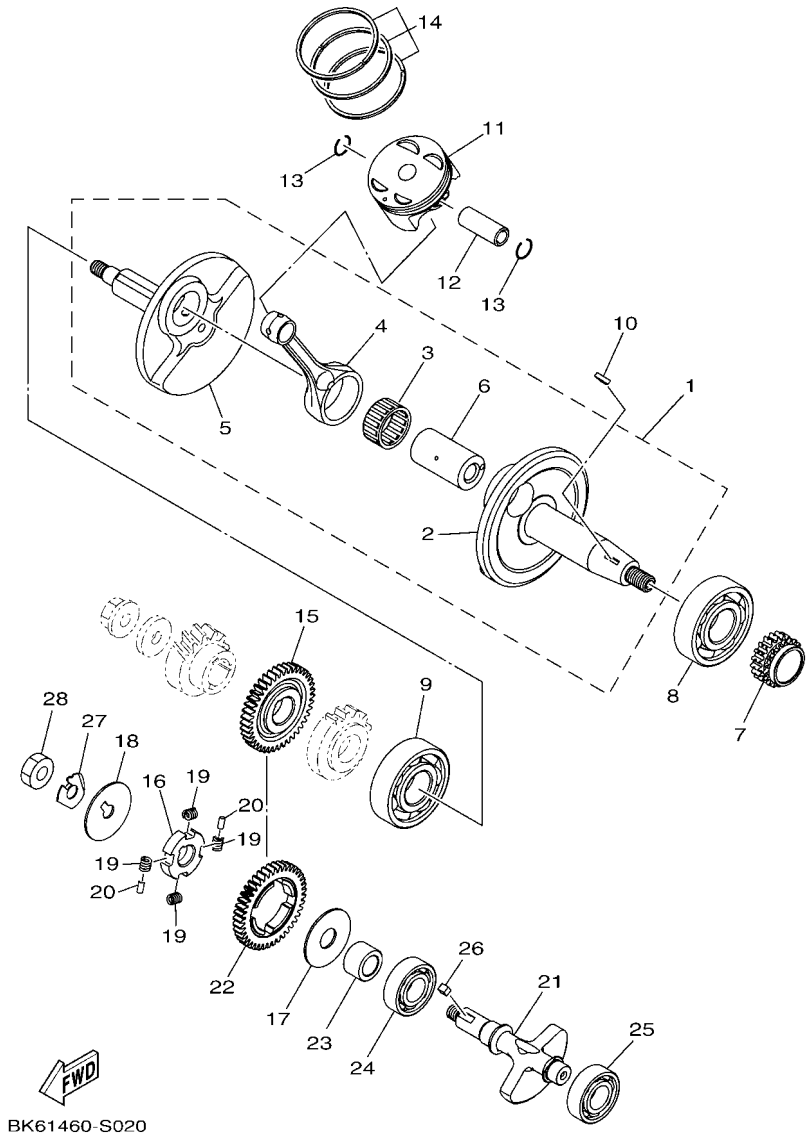

FIG. 2 CRANKSHAFT & PISTON

REF. NO.	PART NO.	DESCRIPTION	BHM3					REMARKS
1	BDJ–E1400–00	CRANKSHAFT ASSY	1					
2	BDJ–E1412–00	.CRANK 1	1					
3	93310–526YT	.BEARING	1					
4	BK6–E1651–00	.ROD, CONNECTING	1					
5	BDJ–E1422–00	.CRANK 2	1					
6	BK6–E1681–00	.PIN, CRANK 1	1					
7	BK7–E1549–00	SPROCKET, CAM CHAIN	1					
8	93306–305X7	BEARING	1					
9	93306–305XV	BEARING	1					
10	90280–03017	KEY, WOODRUFF	1					
11	BK6–E1631–00	PISTON (STD)	1					
12	2DP–E1633–00	PIN, PISTON	1					
13	93450–16115	CIRCLIP	2					
14	BK6–E1603–00	PISTON RING SET (STD)	1					
15	BK6–E1536–00	GEAR, DRIVE	1					
16	21C–E1496–20	BOSS, BUFFER	1					
17	90201–15821	WASHER, PLATE	1					
18	90214–10800	WASHER, CLAW	1					
19	90501–16800	SPRING, COMPRESSION	4					
20	93604–08071	PIN, DOWEL	2					
21	BK7–E1454–00	WEIGHT 1	1					
22	BK6–E1531–10	GEAR, BALANCE WEIGHT	1					
23	90387–15810	COLLAR	1					
24	93306–203XK	BEARING	1					
25	93306–203XK	BEARING	1					
26	90282–05031	KEY, STRAIGHT	1					
27	90215–10803	WASHER, LOCK	1					

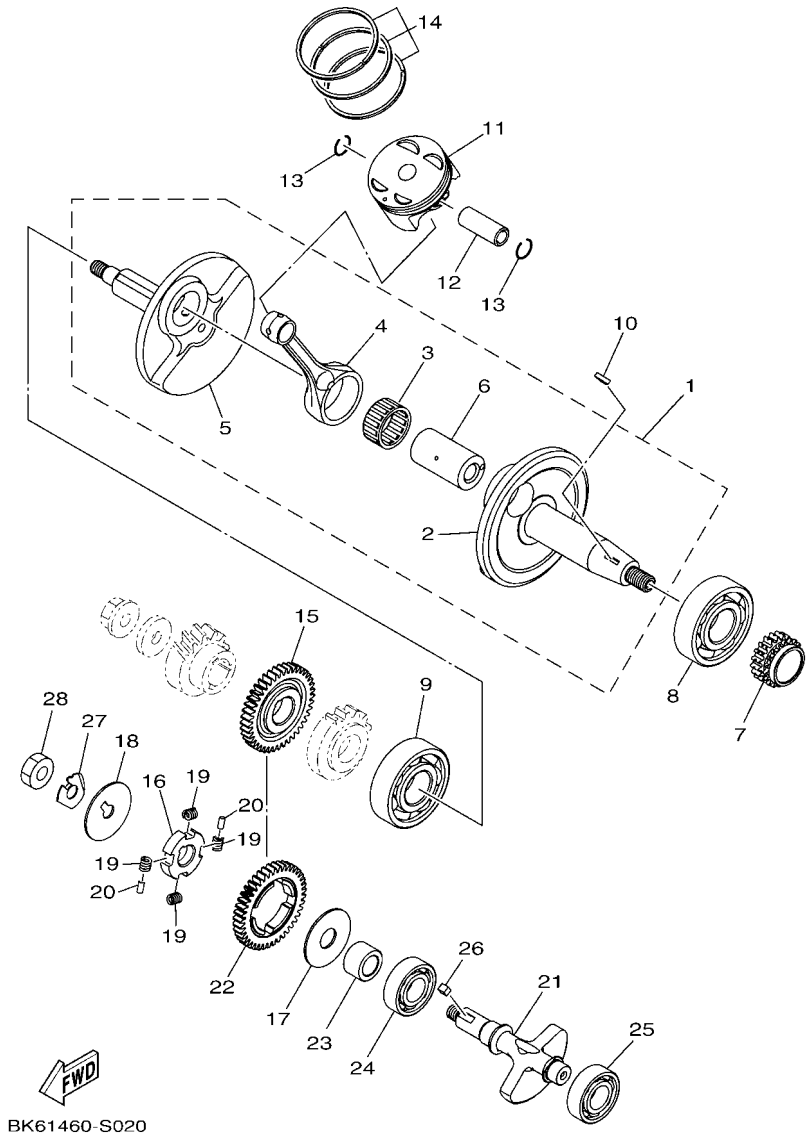

FIG. 2 CRANKSHAFT & PISTON

REF. NO.	PART NO.	DESCRIPTION	BHM3					REMARKS
28	90170–10012	NUT	1					

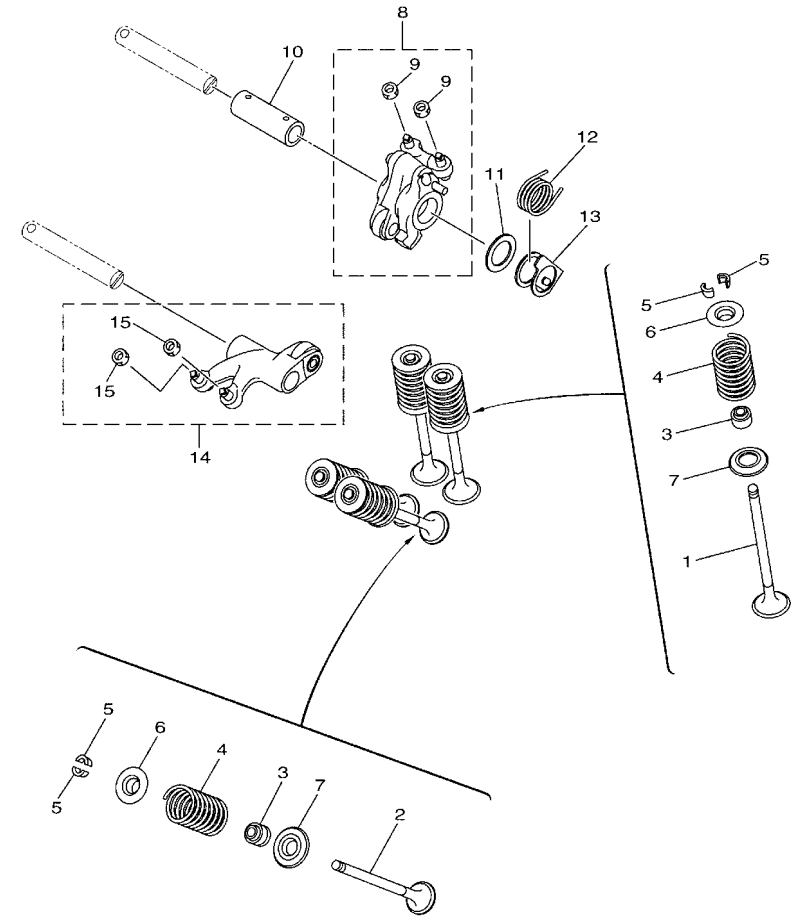

B7D1431-U030

FIG. 3 VALVE

REF. NO.	PART NO.	DESCRIPTION	BHM3					REMARKS
1	BK6–E2111–00	VALVE, INTAKE	2					
2	B3M–E2121–00	VALVE, EXHAUST	2					
3	54P–E2119–00	SEAL, VALVE STEM	4					
4	B63–E2113–00	SPRING, VALVE INNER	4					
5	5TL–E2118–00	LOCK, VALVE SPRING RETAINER	8					
6	2DP–E2117–00	RETAINER, VALVE SPRING	4					
7	50C–E2126–00	SEAT, VALVE SPRING 2	4					
8	BK6–E2150–00	VALVE ROCKER ARM ASSY	1					
9	90170–05803	.NUT	2					
10	BK6–E2166–00	SHAFT, ROCKER 3	1					
11	BK6–E1557–00	WASHER 1	1					
12	BK6–E2226–00	SPRING, COIL	1					
13	BK7–E2279–00	PLATE	1					
14	B5V–E2160–01	VALVE ROCKER ARM ASSY 2	1					
15	90170–05803	.NUT	2					

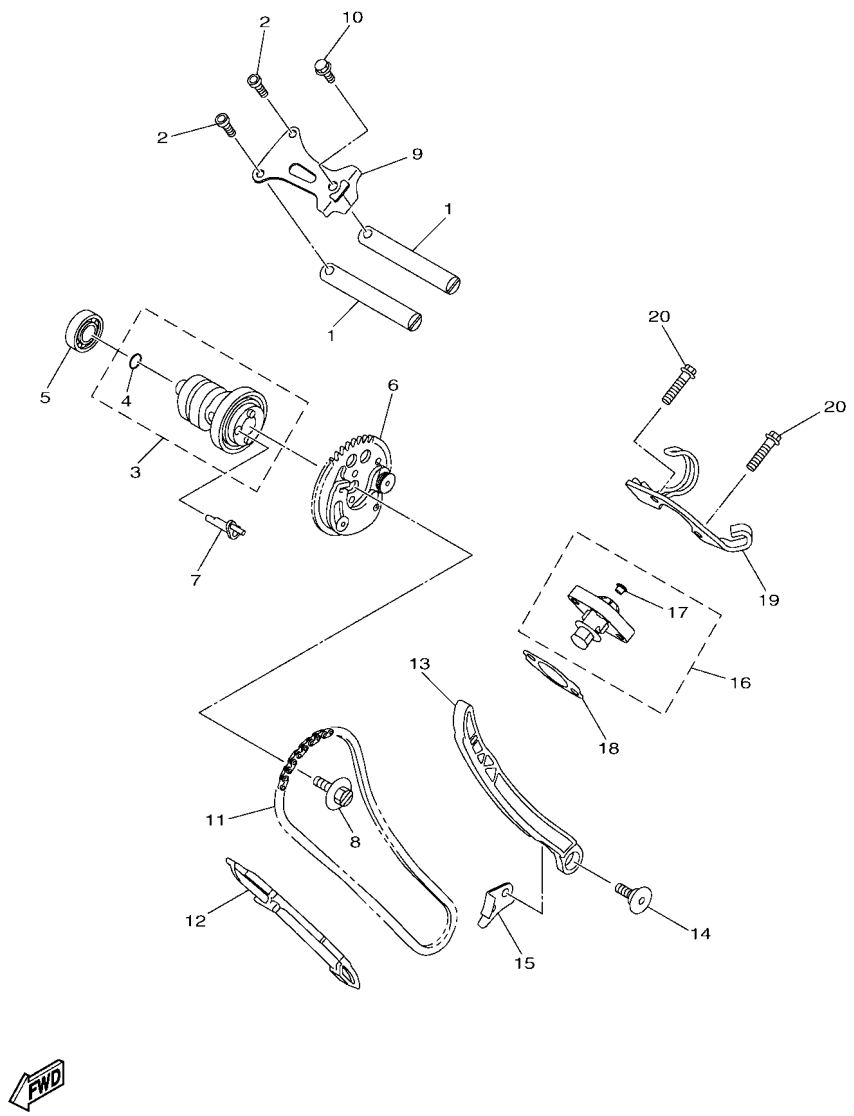

FIG. 4 CAMSHAFT & CHAIN

REF. NO.	PART NO.	DESCRIPTION	BHM3					REMARKS
1	B65–E2156–00	SHAFT, ROCKER 2	2					
2	91312–05016	BOLT, HEXAGON SOCKET HEAD	2					
3	B3M–E2170–00	CAMSHAFT ASSY 1	1					
4	93210–09806	.O-RING	1					
5	93306–001YJ	BEARING	1					
6	B3M–E2280–00	DECOMPRESSION ASSY	1					
7	B6H–E2288–01	CAM, DECOMPRESSION	1					
8	B63–E2157–00	BOLT	1					
9	B63–E111F–00	PLATE	1					
10	95E32–06014	BOLT, FLANGE DEEP RECESS	1					
11	94568–J9096	CHAIN	1					
12	B65–E2231–00	GUIDE, STOPPER 1	1					
13	BK6–E2241–00	GUIDE, STOPPER 2	1					
14	54P–E2228–00	BOLT	1					
15	BK6–E2256–00	COVER, CHAIN	1					
16	2PV–E2210–01	TENSIONER ASSY, CAM CHAIN	1					
17	5MX–E2222–00	.PLUG	1					
18	BK6–E2213–00	GASKET, TENSIONER CASE	1					
19	BK6–E5441–00	HOLDER, CLUTCH CABLE	1					
20	95E32–06025	BOLT, FLANGE DEEP RECESS	2					

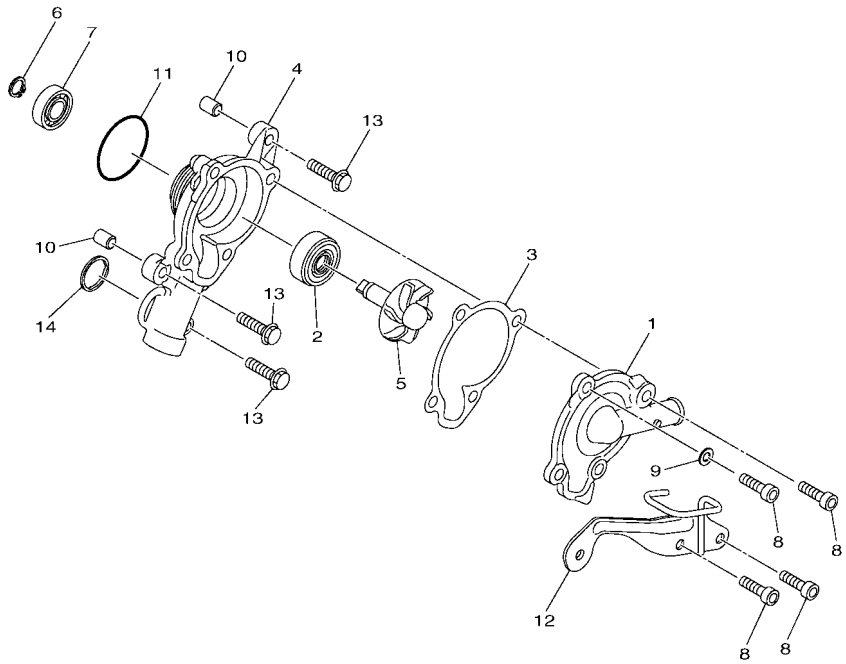

B7D1431-U050

FIG. 5 WATER PUMP

REF. NO.	PART NO.	DESCRIPTION	BHM3					REMARKS
1	BK7–E2422–00	COVER, HOUSING	1					
2	93103–10801	OIL SEAL	1					
3	2DP–E2428–00	GASKET, HOUSING COVER 2	1					
4	BK7–E1185–00	COVER, CYLINDER HEAD SIDE 3	1					
5	BK7–E2450–00	IMPELLER SHAFT ASSY	1					
6	BK7–E2842–00	CIRCLIP	1					
7	93306–000Y3	BEARING	1					
8	BK7–E2615–00	BOLT	4					
9	BK7–E2435–00	GASKET	1					
10	BK7–E3516–00	PIN, DOWEL	2					
11	93210–39803	O-RING	1					
12	BK7–E2443–00	STAY	1					
13	95E32–06025	BOLT, FLANGE DEEP RECESS	3					
14	93210–19809	O-RING	1					

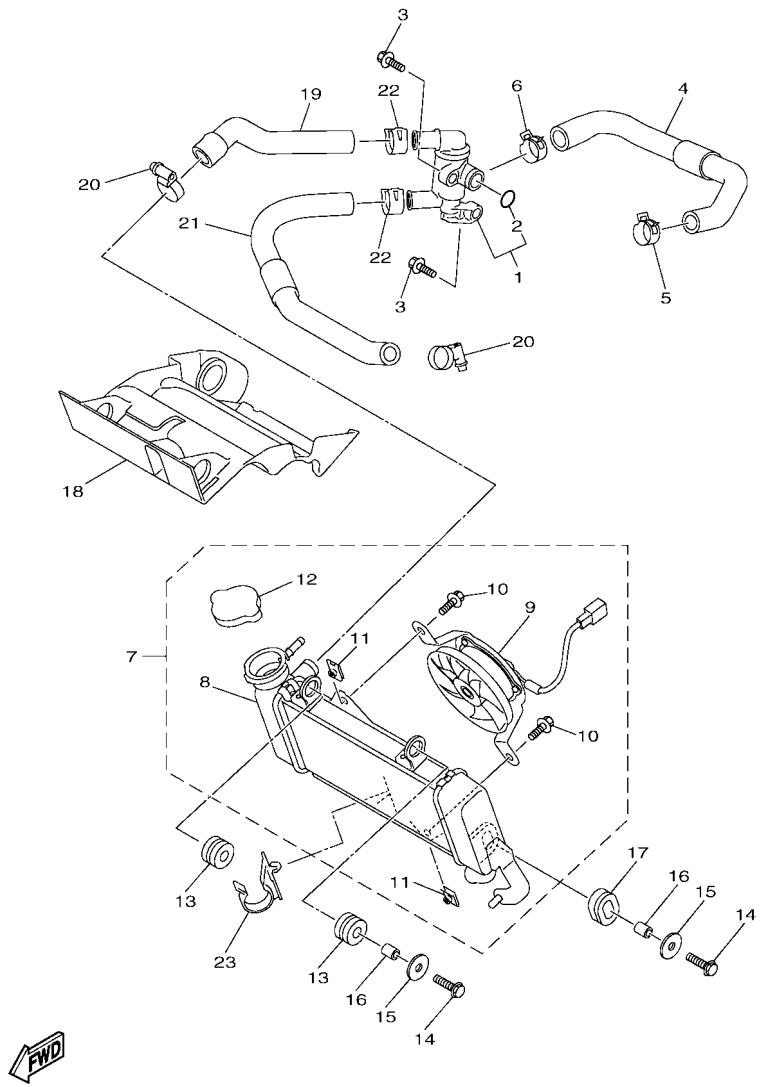

BFL1200-V060

FIG. 6 RADIATOR & HOSE

REF. NO.	PART NO.	DESCRIPTION	BHM3					REMARKS
1	BK6–E2410–00	THERMOSTAT ASSY	1					
2	52S–12439–00	.O-RING	1					
3	95E32–06020	BOLT, FLANGE DEEP RECESS	2					
4	BK6–E2483–00	PIPE 3	1					
5	90467–19803	CLIP	1					
6	90467–20806	CLIP	1					
7	BK6–E2460–00	RADIATOR ASSY	1					
8	BK6–E2461–00	.RADIATOR COMP	1					
9	BK6–E2405–00	.BLOWER ASSY	1					
10	5YP–E2675–00	.BOLT, BLOWER HOLDING	2					
11	5YP–E2671–00	.NUT 1	2					
12	5P0–E2590–00	.CONDUCTION ASSY	1					
13	90480–15363	GROMMET	2					
14	95D32–06025	BOLT, FLANGE DEEP RECESS	2					
15	90201–06880	WASHER, PLATE	2					
16	90387–064W3	COLLAR	2					
17	90480–01803	GROMMET	1					
18	BK7–E2467–00	COVER, RADIATOR	1					
19	BK6–E2481–00	PIPE 1	1					
20	90450–27806	HOSE CLAMP ASSY	2					
21	BK6–E2482–00	PIPE 2	1					
22	90467–20805	CLIP	2					
23	3C1–F1338–00	CLAMP	1					

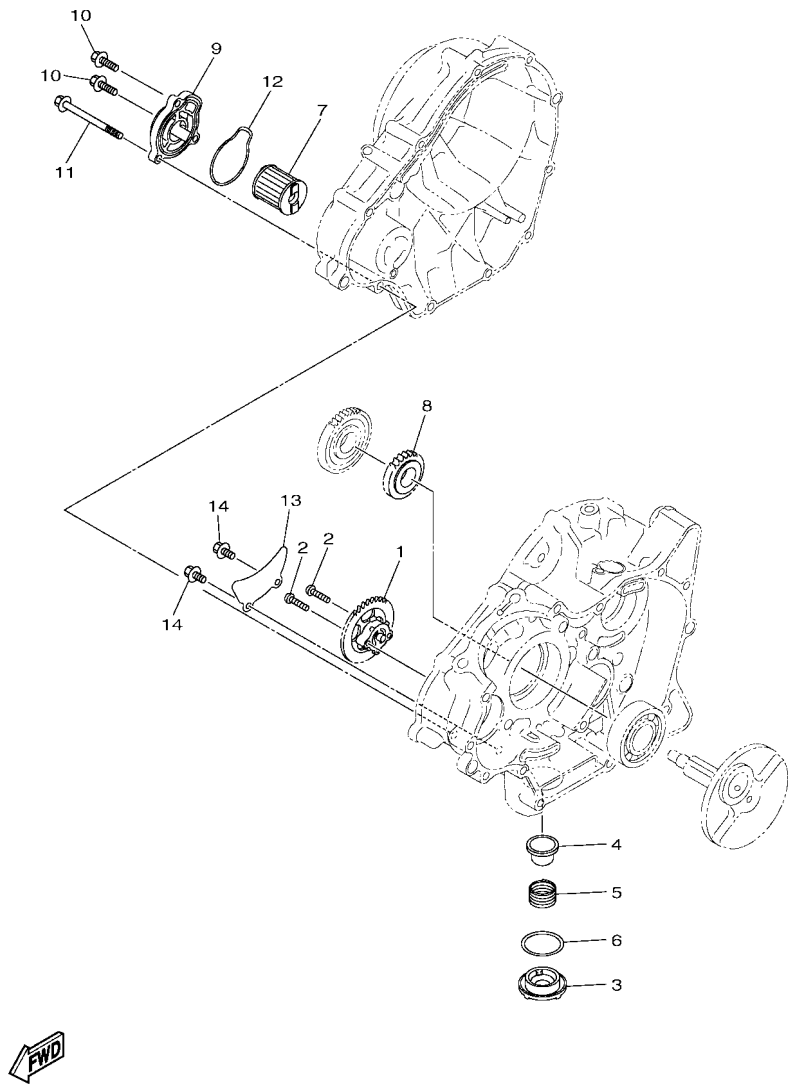

B7D1431-U070

FIG. 7 OIL PUMP

REF. NO.	PART NO.	DESCRIPTION	BHM3					REMARKS
1	BK6–E3300–00	OIL PUMP ASSY	1					
2	90111–05822	BOLT,HEX. SOCKET BUTTON	2					
3	1S7–E5351–00	PLUG, DRAIN	1					
4	38B–E3411–00	STRAINER, OIL	1					
5	90501–18576	SPRING, COMPRESSION	1					
6	93210–34802	O-RING	1					
7	38B–E3440–01	ELEMENT ASSY, OIL CLEANER	1					
8	2PV–E3324–00	GEAR, PUMP DRIVE	1					
9	2PK–E3447–00	COVER, OIL ELEMENT	1					
10	95E32–06020	BOLT, FLANGE DEEP RECESS	2					
11	95E32–06080	BOLT, FLANGE DEEP RECESS	1					
12	93210–54805	O-RING	1					
13	3C1–E3327–00	COVER, PUMP GEAR	1					
14	95E32–06012	BOLT, FLANGE DEEP RECESS	2					

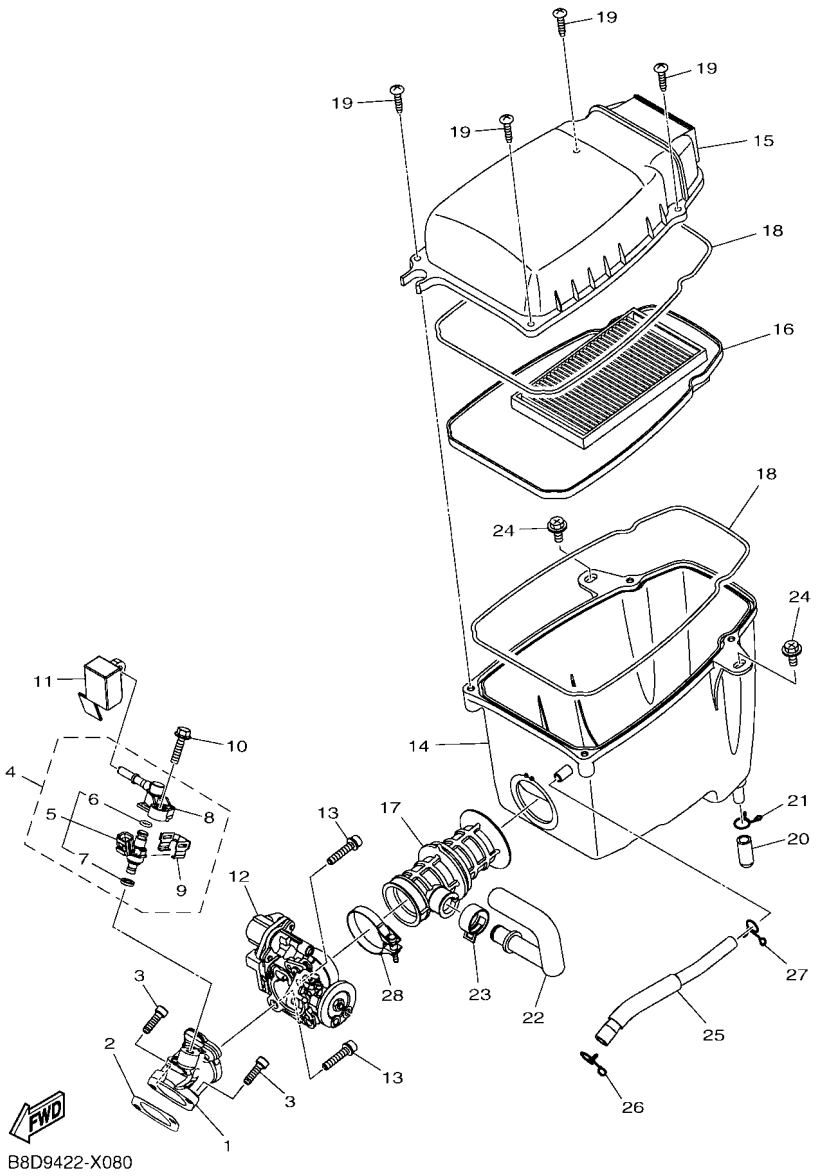

FIG. 8 INTAKE

REF. NO.	PART NO.	DESCRIPTION	BHM3					REMARKS
1	BDJ–E3585–00	MANIFOLD	1					
2	BK6–E4199–00	GASKET	1					
3	91332–06020	BOLT	2					
4	BDJ–E3770–00	INJECTOR ASSY	1					
5	BDJ–E3761–00	.INJECTOR	1					
6	2SU–E4147–00	..O-RING	1					
7	2SU–E41A1–00	..SEAL RING	1					
8	B7J–E3938–10	.PIPE	1					
9	1ST–E4137–00	.CLIP	1					
10	95812–06025	BOLT, FLANGE	1					
11	BDJ–E3767–00	CAP, INJECTOR	1					
12	BK6–E3750–00	THROTTLE BODY ASSY	1					
13	90110–06846	BOLT, HEXAGON SOCKET HEAD	2					
14	BK6–E4411–01	CASE, AIR CLEANER 1	1					
15	BDJ–E4412–00	CAP, CLEANER CASE 1	1					
16	B5G–E4450–00	ELEMENT ASSY, AIR CLEANER	1					
17	BK6–E4453–00	JOINT, AIR CLEANER 1	1					
18	BK6–E4452–00	SEAL	2					
19	97707–50025	SCREW, TAPPING	4					
20	5TL–E443E–00	PIPE, DRAIN	1					
21	90467–12800	CLIP	1					
22	BK6–E441J–00	PIPE, SILENCER	1					
23	90467–20804	CLIP	1					
24	90119–06114	BOLT, WITH WASHER	2					
25	BK7–E1166–00	PIPE, BREATHER 1	1					
26	90467–12052	CLIP	1					
27	90467–11825	CLIP	1					

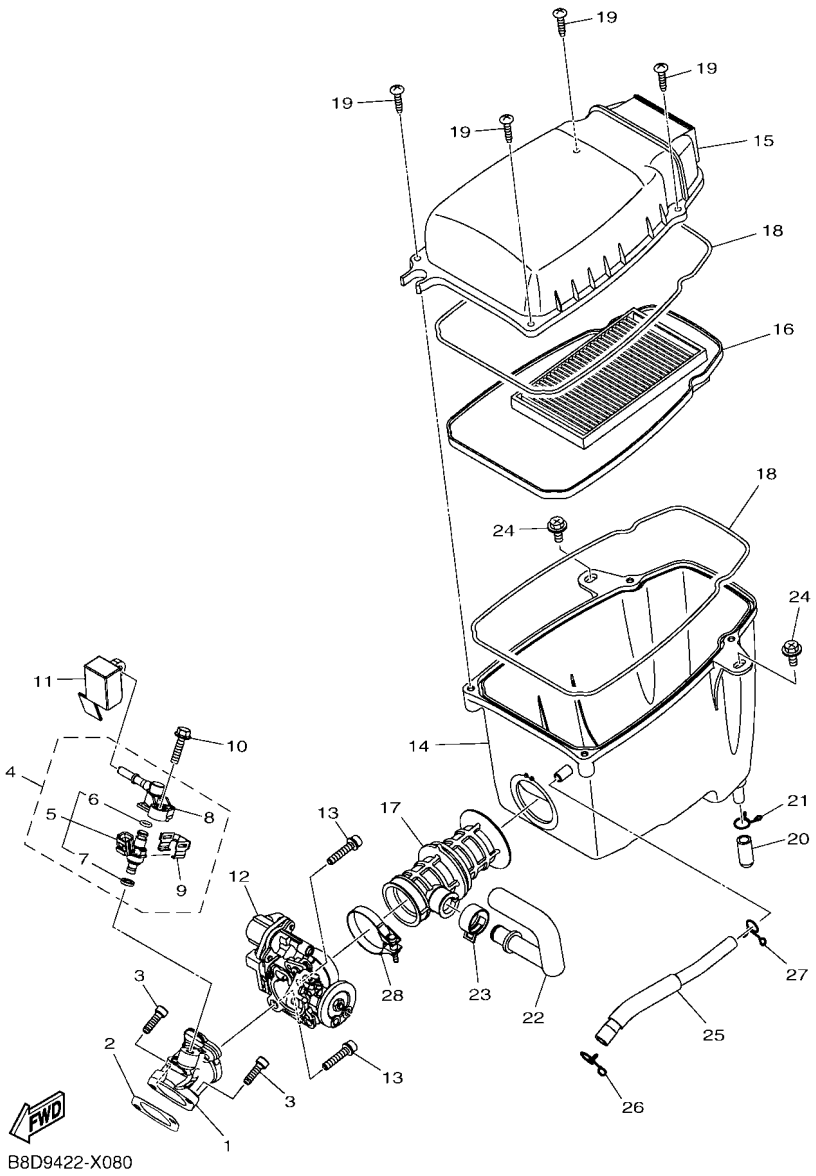

FIG. 8 INTAKE

REF. NO.	PART NO.	DESCRIPTION	BHM3					REMARKS
28	90450–43805	HOSE CLAMP ASSY	1					

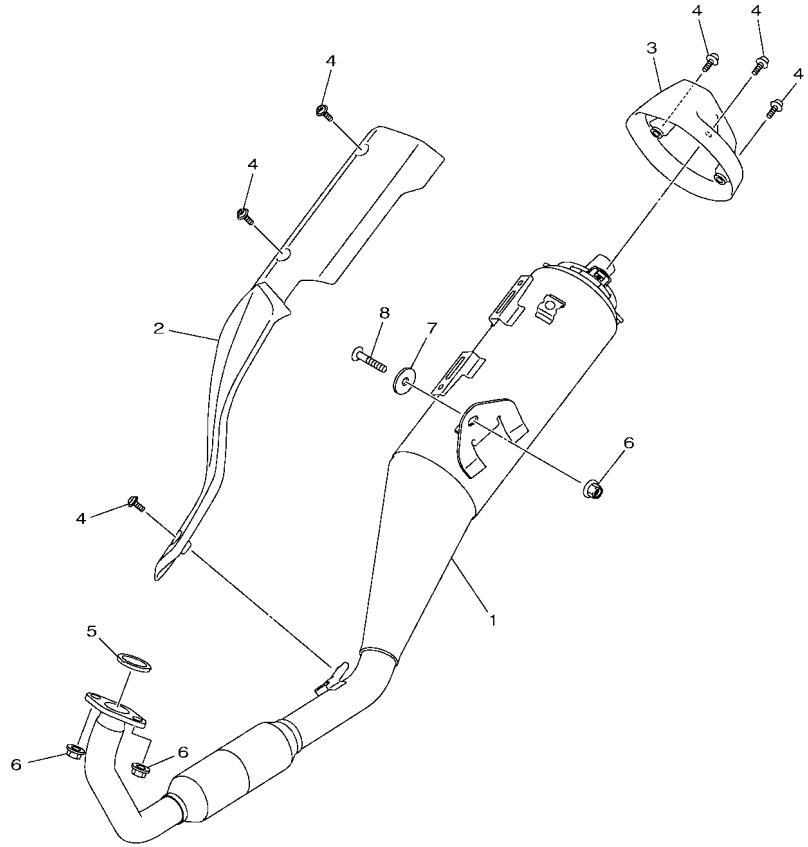

B8D7460-X090

FIG. 9 EXHAUST

REF. NO.	PART NO.	DESCRIPTION	BHM3					REMARKS
1	B9B–E4703–10	MUFFLER COMP. 1	1					
2	BK6–E4718–00	PROTECTOR, MUFFLER 1	1					
3	BK6–E4799–00	CAP	1					
4	90111–06860	BOLT,HEX. SOCKET BUTTON	6					
5	BK7–E4613–00	GASKET, EXHAUST PIPE	1					
6	95702–08500	NUT, FLANGE	3					
7	90201–08612	WASHER, PLATE	1					
8	90149–08220	SCREW	1					

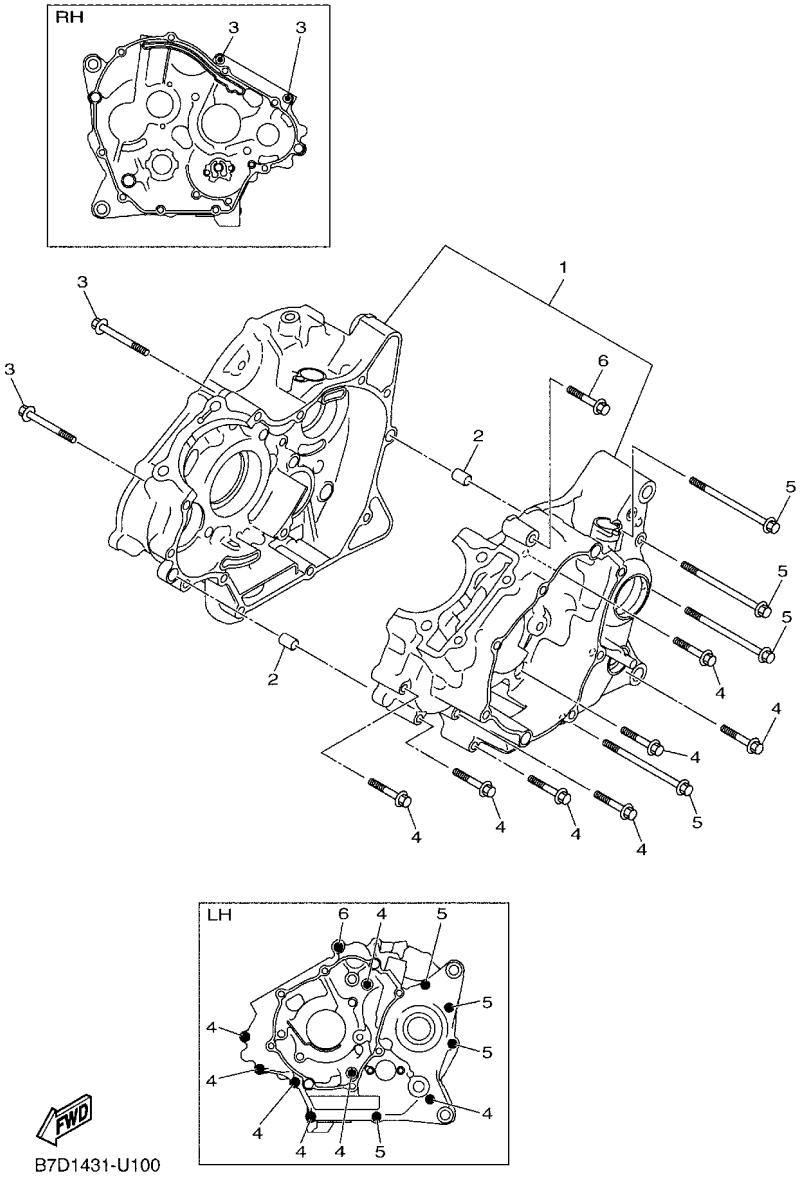

FIG. 10 CRANKCASE

REF. NO.	PART NO.	DESCRIPTION	BHM3					REMARKS
1	BK6–E5150–00	CRANKCASE ASSY	1					
2	99530–10114	PIN, DOWEL	2					
3	95022–06055	BOLT, FLANGE	2					
4	95022–06045	BOLT, FLANGE	7					
5	95022–06070	BOLT, FLANGE	4					
6	95022–06040	BOLT, FLANGE	1					

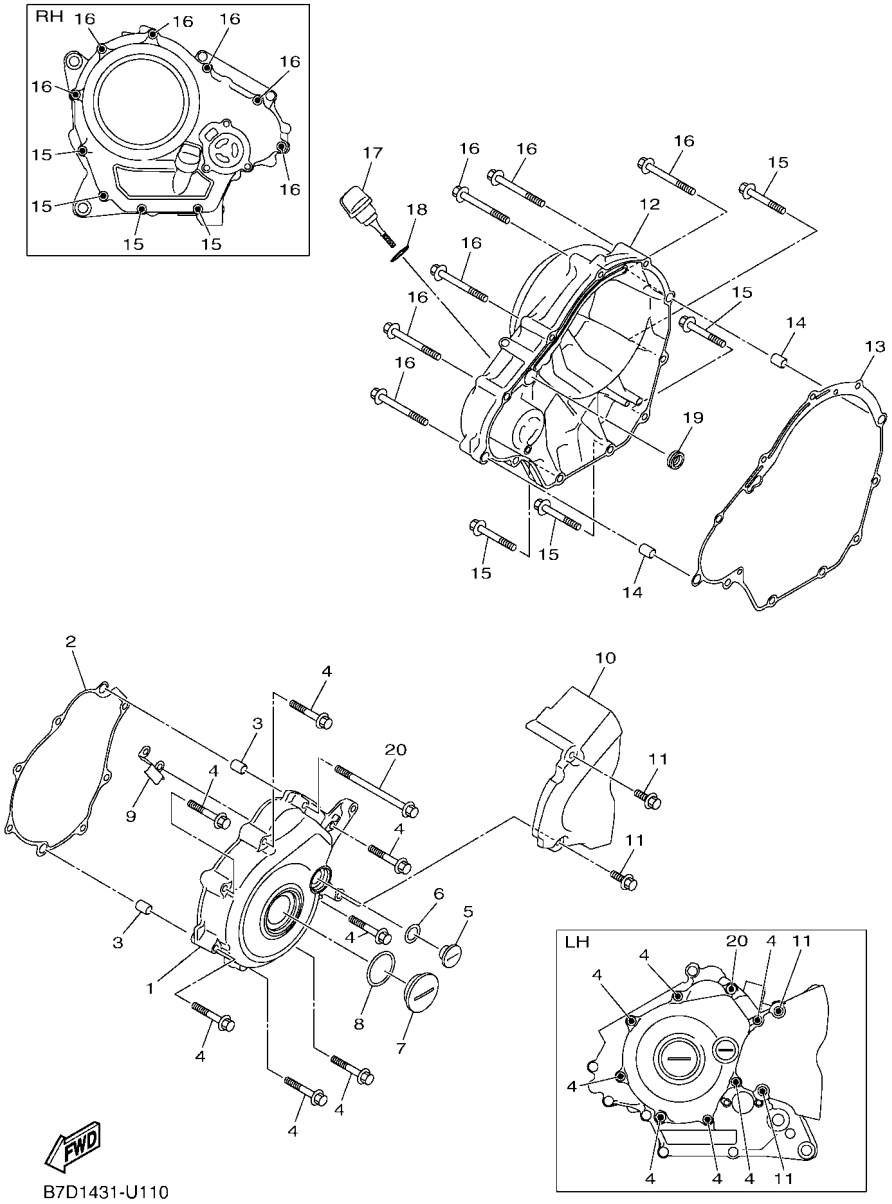

FIG. 11 CRANKCASE COVER 1

REF. NO.	PART NO.	DESCRIPTION	BHM3					REMARKS
1	BK6–E5411–00	COVER, CRANKCASE 1	1					
2	BK6–E5451–00	GASKET, CRANKCASE COVER 1	1					
3	99530–10114	PIN, DOWEL	2					
4	95022–06040	BOLT, FLANGE	7					
5	90340–14824	PLUG, STRAIGHT SCREW	1					
6	93210–148F8	O-RING	1					
7	90340–32823	PLUG, STRAIGHT SCREW	1					
8	93210–32816	O-RING	1					
9	2PV–E5113–00	PLATE	1					
10	BK6–E5418–00	COVER, CHAIN CASE	1					
11	95022–06016	BOLT, FLANGE	2					
12	BK6–E5421–00	COVER, CRANKCASE 2	1					
13	BK6–E5461–00	GASKET, CRANKCASE COVER 2	1					
14	99530–10114	PIN, DOWEL	2					
15	95022–06040	BOLT, FLANGE	4					
16	95022–06050	BOLT, FLANGE	6					
17	BK7–E5362–00	PLUG, OIL LEVEL	1					
18	93210–19809	O-RING	1					
19	93101–10843	OIL SEAL	1					
20	95022–06090	BOLT, FLANGE	1					

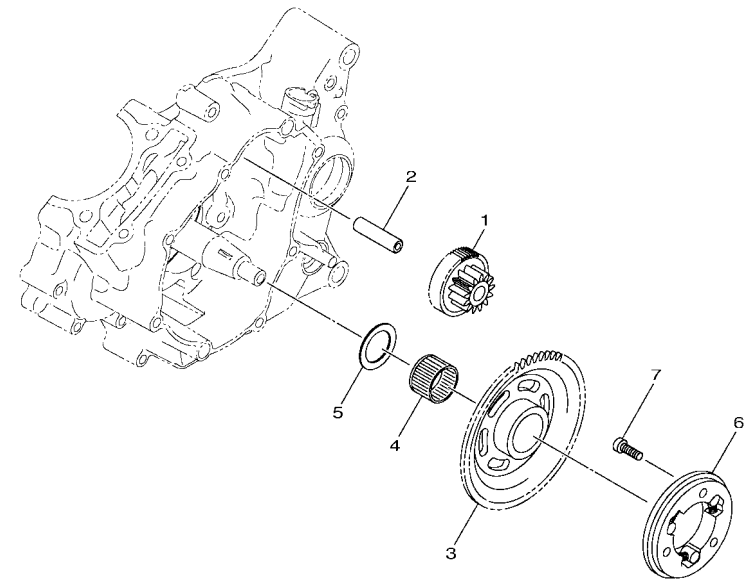

B7D1431-U120

FIG. 12 STARTER CLUTCH

REF. NO.	PART NO.	DESCRIPTION	BHM3					REMARKS
1	B48–E5514–00	GEAR 2	1					
2	BK7–E5521–00	SHAFT 1	1					
3	2PV–E5524–10	WHEEL, STARTER	1					
4	93310–325YC	BEARING	1					
5	90201–25290	WASHER, PLATE	1					
6	2TP–E5580–00	STARTER CLUTCH OUTER ASSY	1					
7	90110–06873	BOLT, HEXAGON SOCKET HEAD	3					

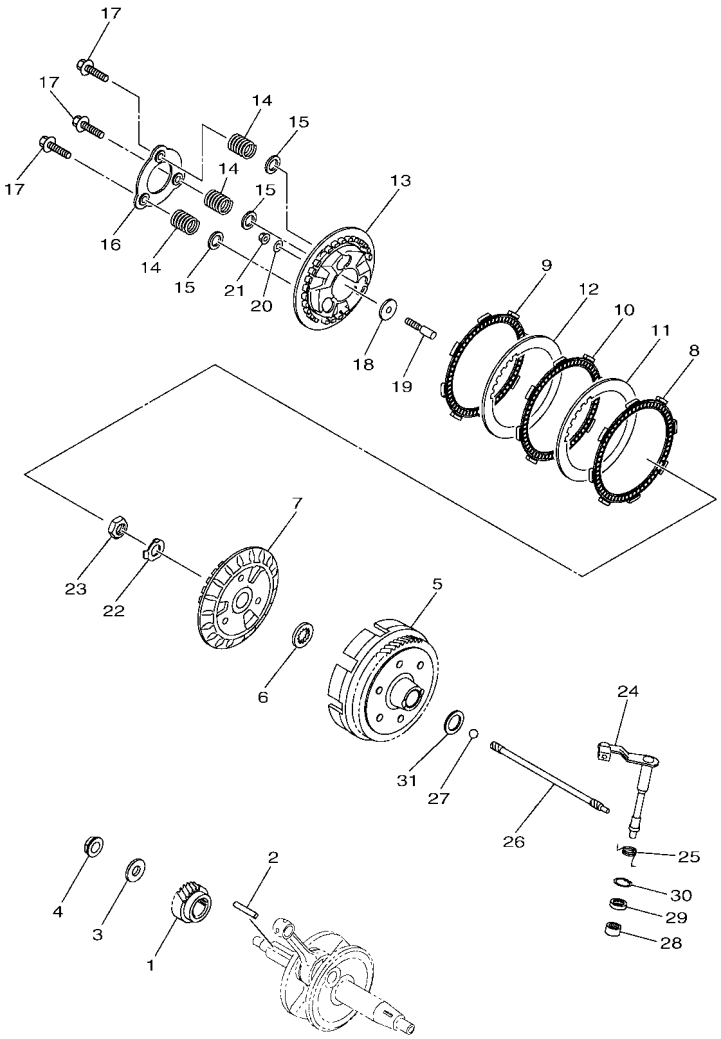

B7D1431-U130

FIG. 13 CLUTCH

REF. NO.	PART NO.	DESCRIPTION	BHM3					REMARKS
1	3C1–E6111–00	GEAR, PRIMARY DRIVE	1					
2	38B–E6193–00	KEY, FEATHER	1					
3	90201–12019	WASHER, PLATE	1					
4	90179–12808	NUT	1					
5	BDJ–E6150–00	PRIMARY DRIVEN GEAR COMP.	1					
6	2ND–E6154–00	PLATE, THRUST 1	1					
7	BK6–E6371–00	BOSS, CLUTCH	1					
8	2ND–E6321–00	PLATE, FRICTION	1					
9	BK6–E6331–00	PLATE, FRICTION 2	1					
10	BK6–E6321–00	PLATE, FRICTION	1					
11	BK6–E6325–00	PLATE, CLUTCH 2	1					
12	BK6–E6324–00	PLATE, CLUTCH 1	1					
13	BK6–E6351–00	PLATE, PRESSURE 1	1					
14	BK6–E6333–00	SPRING, CLUTCH 1	3					
15	BK6–E6774–00	WASHER	3					
16	BK6–E6352–00	PLATE, PRESSURE 2	1					
17	BK6–E6337–00	SCREW, SPRING	3					
18	3C1–E6358–00	PLATE, PUSH	1					
19	3C1–E6356–10	ROD, PUSH 1	1					
20	54B–E6144–00	WASHER	1					
21	3C1–E6344–00	NUT, ADJUSTING	1					
22	90215–14802	WASHER, LOCK	1					
23	90170–14801	NUT	1					
24	BK7–E6380–00	PUSH LEVER ASSY	1					
25	BK6–E6345–00	SPRING, RETURN	1					
26	1PA–E6357–00	ROD, PUSH 2	1					
27	93505–16844	BALL	1					

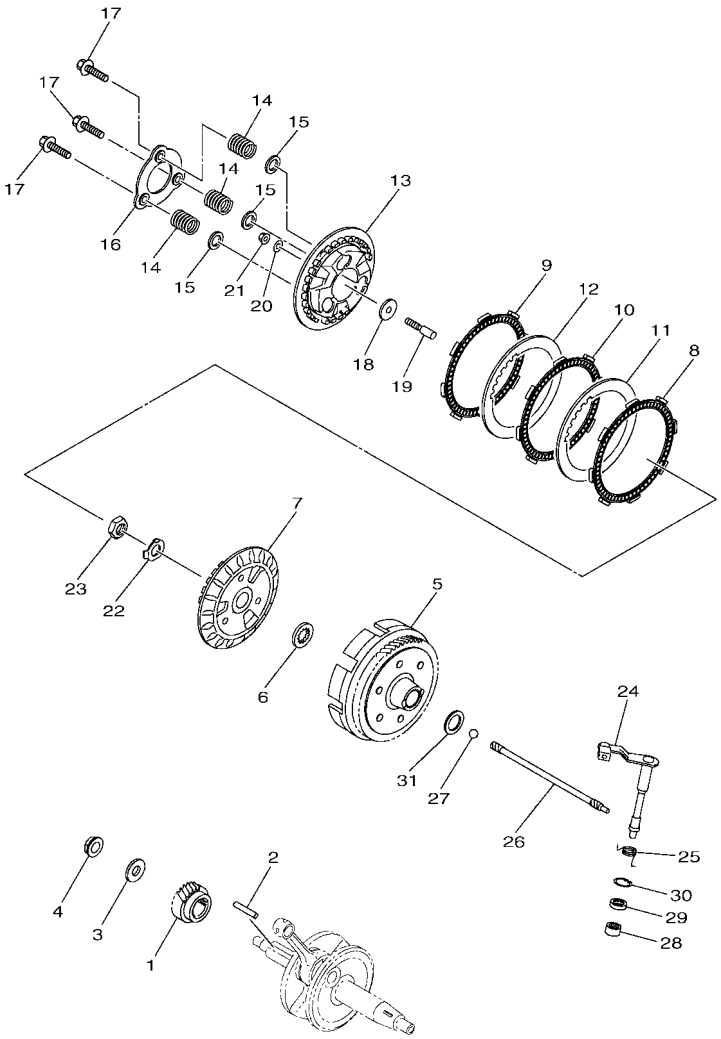

B7D1431-U130

FIG. 13 CLUTCH

REF. NO.	PART NO.	DESCRIPTION	BHM3					REMARKS
28	93315–112Y8	BEARING	1					
29	93102–12862	OIL SEAL	1					
30	99009–20500	CIRCLIP	1					
31	90208–20003	WASHER, CONICAL SPRING	1					

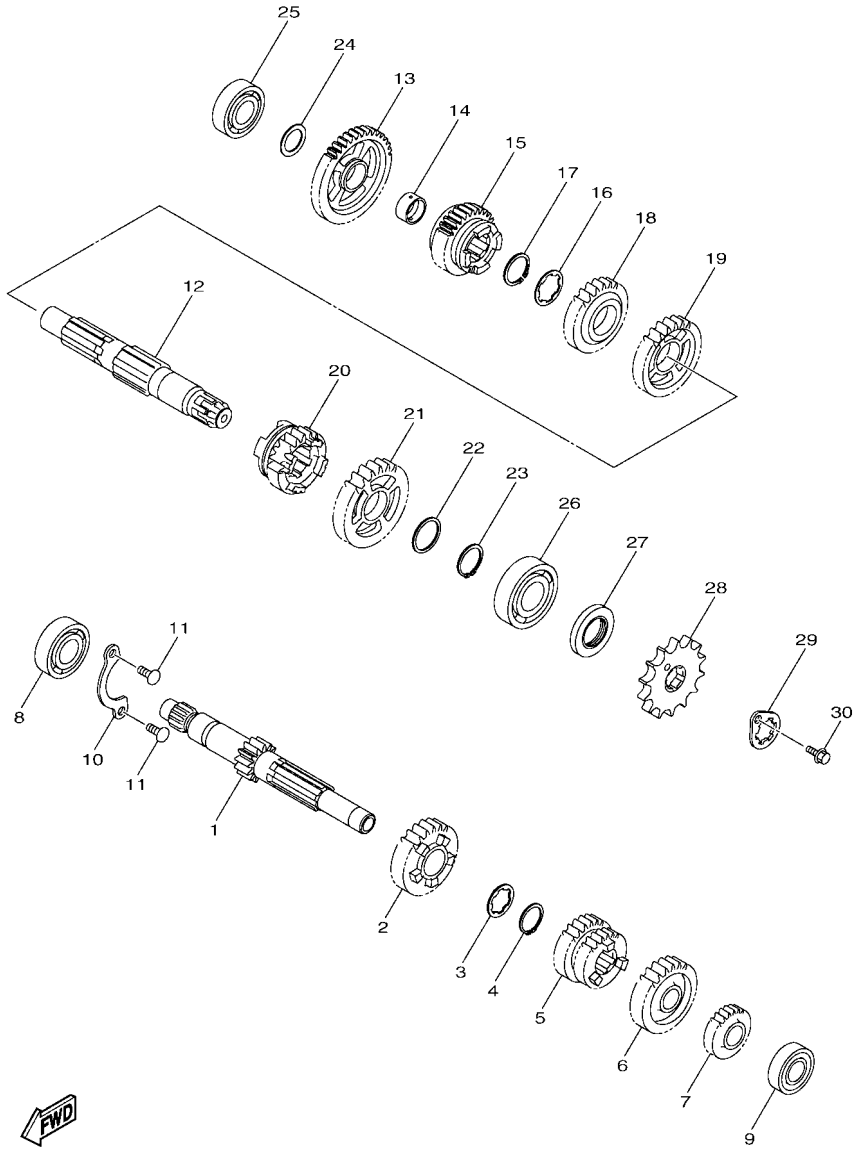

B7D1431-U140

FIG. 14 TRANSMISSION

REF. NO.	PART NO.	DESCRIPTION	BHM3					REMARKS
1	BK6–E7411–00	AXLE, MAIN	1					
2	BK6–E7151–00	GEAR, 5TH PINION (23T)	1					
3	90209–17285	WASHER	1					
4	93410–20038	CIRCLIP	1					
5	5D7–E7131–00	GEAR, 3RD PINION (22T/21T)	1					
6	BK6–E7161–00	GEAR, 6TH PINION (25T)	1					
7	3C1–E7121–00	GEAR, 2ND PINION (16T)	1					
8	93306–054XF	BEARING	1					
9	93306–252YN	BEARING	1					
10	3C1–E7471–00	PLATE, COVER	1					
11	98512–06012	SCREW, PAN HEAD	2					
12	BK6–E7421–00	AXLE, DRIVE	1					
13	3C1–E7211–00	GEAR, 1ST WHEEL (34T)	1					
14	90387–17804	COLLAR	1					
15	BK6–E7251–00	GEAR, 5TH WHEEL (22T)	1					
16	90209–18208	WASHER	1					
17	93410–22039	CIRCLIP	1					
18	BK6–E7241–00	GEAR, 4TH WHEEL (24T)	1					
19	BK6–E7231–00	GEAR, 3RD WHEEL (30T)	1					
20	5D7–E7261–00	GEAR, 6TH WHEEL (21T)	1					
21	BK6–E7221–00	GEAR, 2ND WHEEL (30T)	1					
22	90201–22793	WASHER, PLATE	1					
23	93410–22039	CIRCLIP	1					
24	90201–173F4	WASHER, PLATE	1					
25	93306–253X2	BEARING	1					
26	93306–272YC	BEARING	1					
27	93102–22827	OIL SEAL	1					

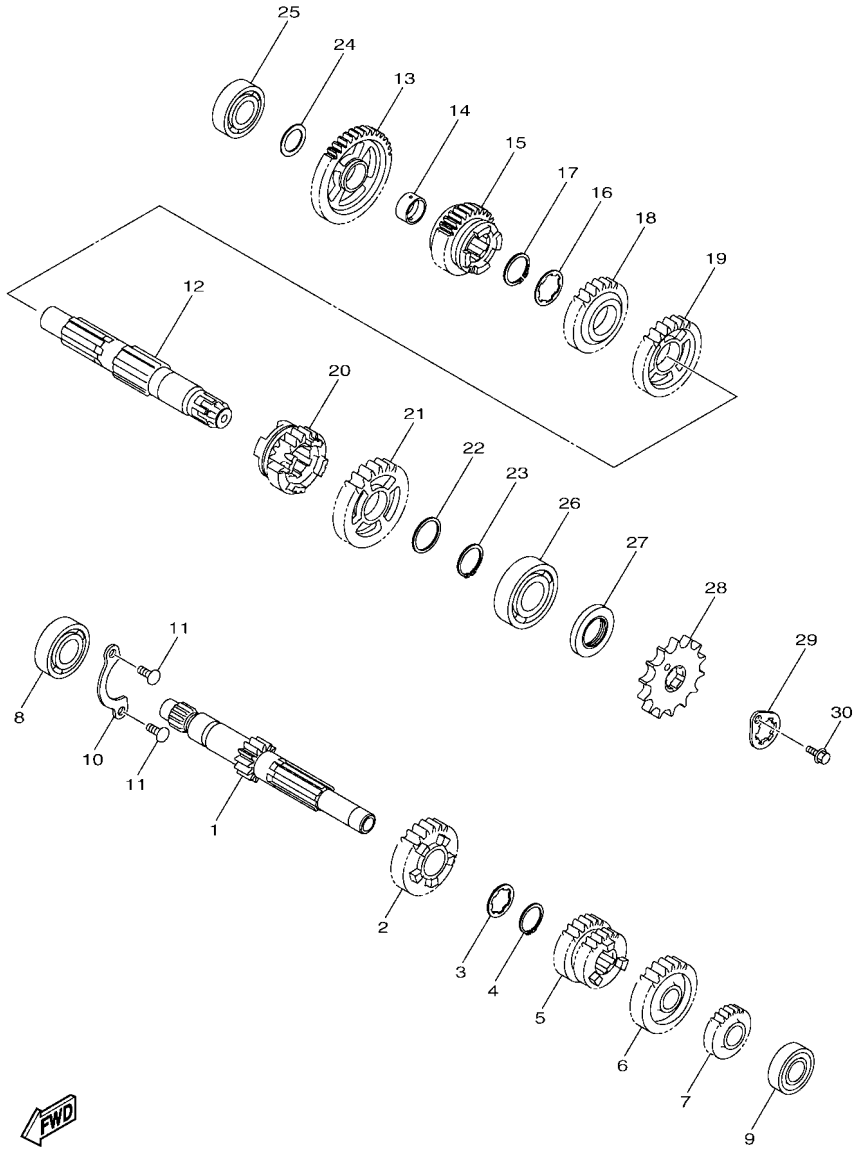

B7D1431-U140

FIG. 14 TRANSMISSION

REF. NO.	PART NO.	DESCRIPTION	BHM3					REMARKS
28	93822–14800	SPROCKET, DRIVE (14T)	1					
29	1S7–E7456–00	HOLDER, SPROCKET	1					
30	95022–06010	BOLT, FLANGE	1					

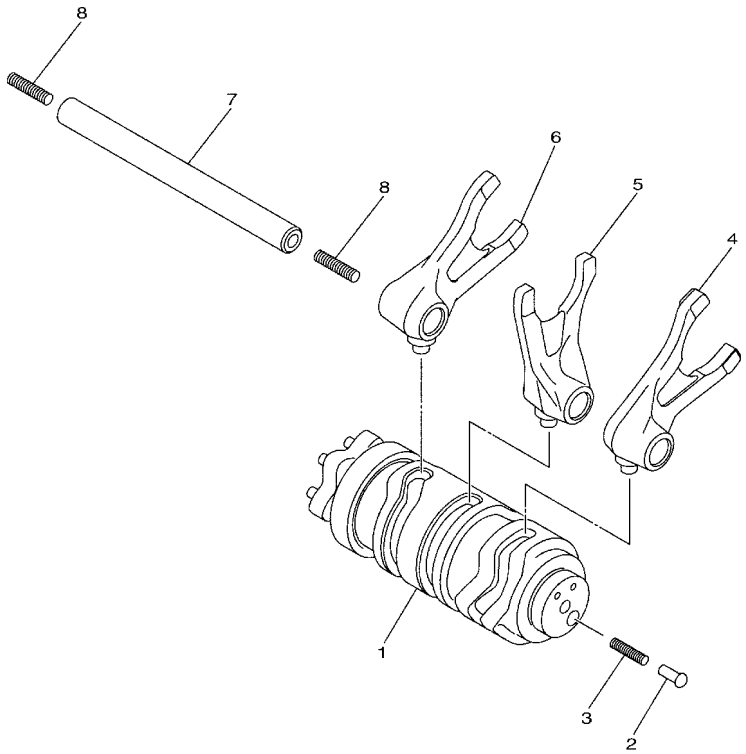

B7D1431-U150

FIG. 15 SHIFT CAM & FORK

REF. NO.	PART NO.	DESCRIPTION	BHM3					REMARKS
1	BK6–E8540–00	SHIFT CAM ASSY	1					
2	5TP–E8542–00	POINT, NEUTRAL	1					
3	90501–06022	SPRING, COMPRESSION	1					
4	2ND–E8511–00	FORK, SHIFT 1	1					
5	2ND–E8512–00	FORK, SHIFT 2	1					
6	2ND–E8513–00	FORK, SHIFT 3	1					
7	1PA–E8531–00	BAR, SHIFT FORK GUIDE 1	1					
8	90501–06800	SPRING, COMPRESSION	2					

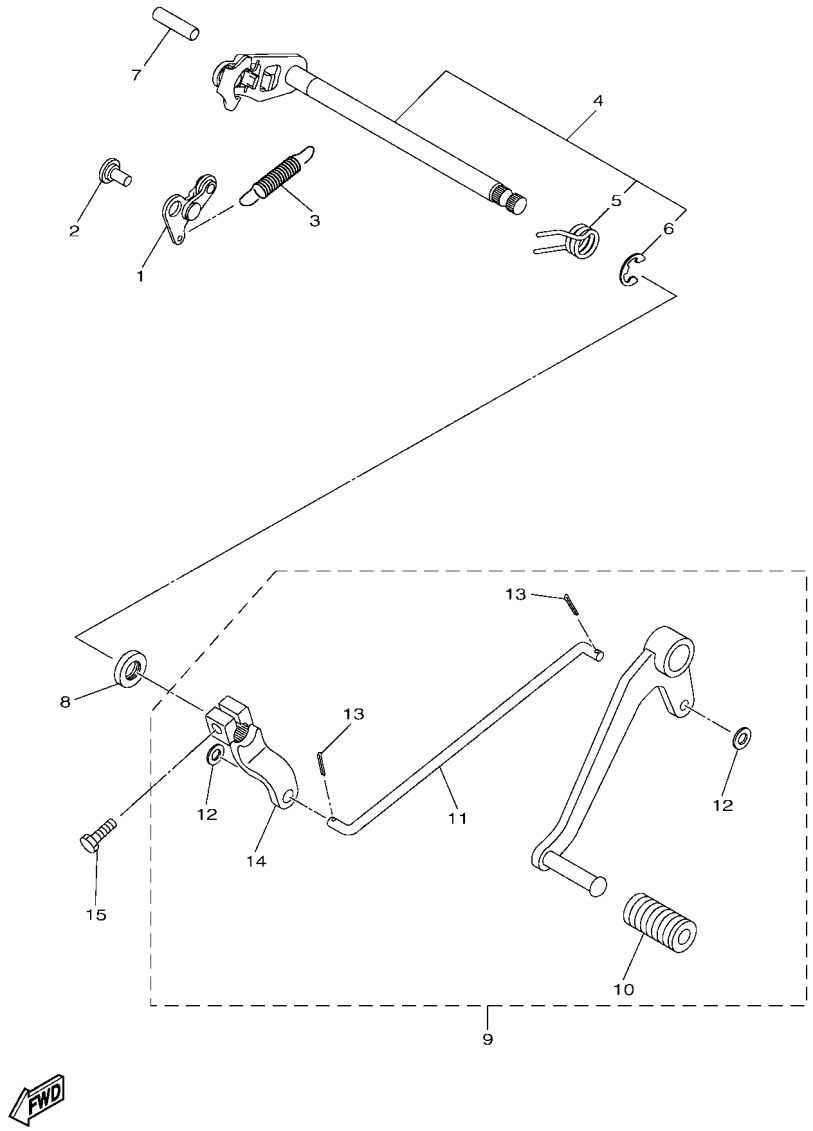

B7D1431-U160

FIG. 16 SHIFT SHAFT

REF. NO.	PART NO.	DESCRIPTION	BHM3					REMARKS
1	BK7–E8140–00	STOPPER LEVER ASSY	1					
2	90109–06279	BOLT	1					
3	BK6–E8337–00	SPRING	1					
4	38B–E8101–00	SHIFT SHAFT ASSY	1					
5	90508–32837	.SPRING, TORSION	1					
6	99001–10600	.CIRCLIP	1					
7	93608–30839	PIN, DOWEL	1					
8	93102–12891	OIL SEAL	1					
9	B9D–E8110–00	SHIFT PEDAL ASSY	1					
10	20P–E8113–00	.COVER, SHIFT PEDAL	1					
11	B9D–E8115–00	.ROD, SHIFT	1					
12	92902–06200	.WASHER	2					
13	90252–18800	.PIN, COTTER	2					
14	BK7–E8112–00	.ARM, SHIFT	1					
15	97012–06020	BOLT	1					

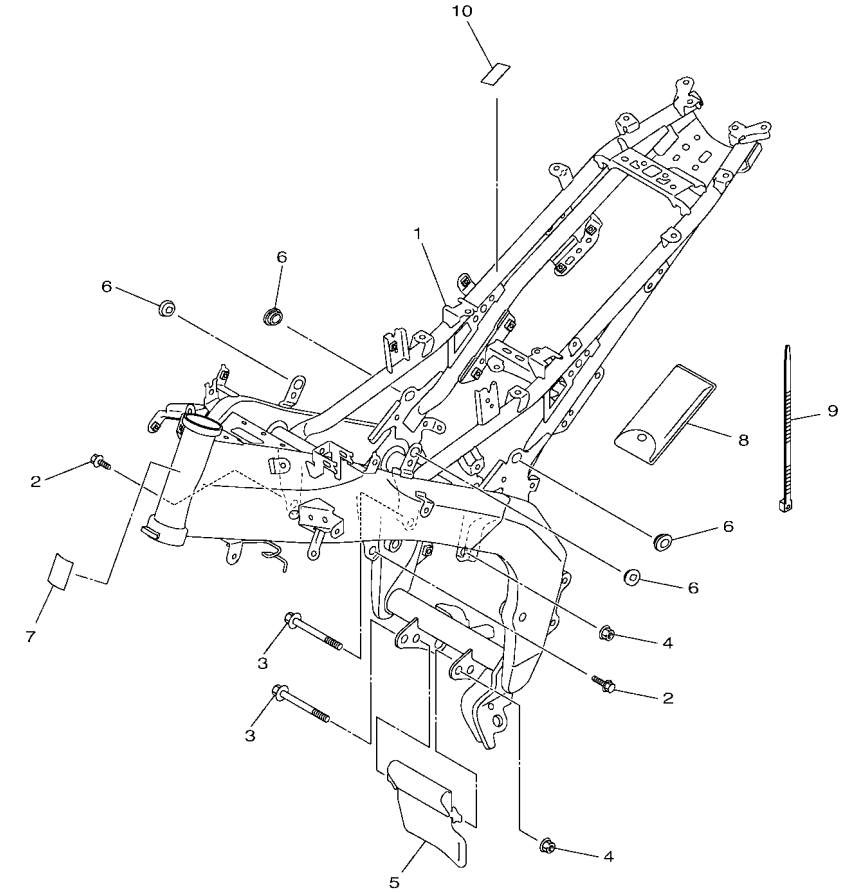

BHM1440-W170

FIG. 17 FRAME

REF. NO.	PART NO.	DESCRIPTION	BHM3					REMARKS
1	B8D–F1110–02	FRAME COMP.	1					
2	90105–10225	BOLT, FLANGE	2					
3	90105–10886	BOLT, FLANGE	2					
4	90179–10805	NUT	2					
5	BK6–F2327–00	MUD GUARD 1	1					
6	90480–01558	GROMMET	4					
7	B8D–F111D–00	SEAL 1	1					
8	B8D–F8100–00	TOOL KIT	1					
9	90465–13M24	CLAMP	1					
10	55C–F815P–00	LABEL, NOTICE 1	1					

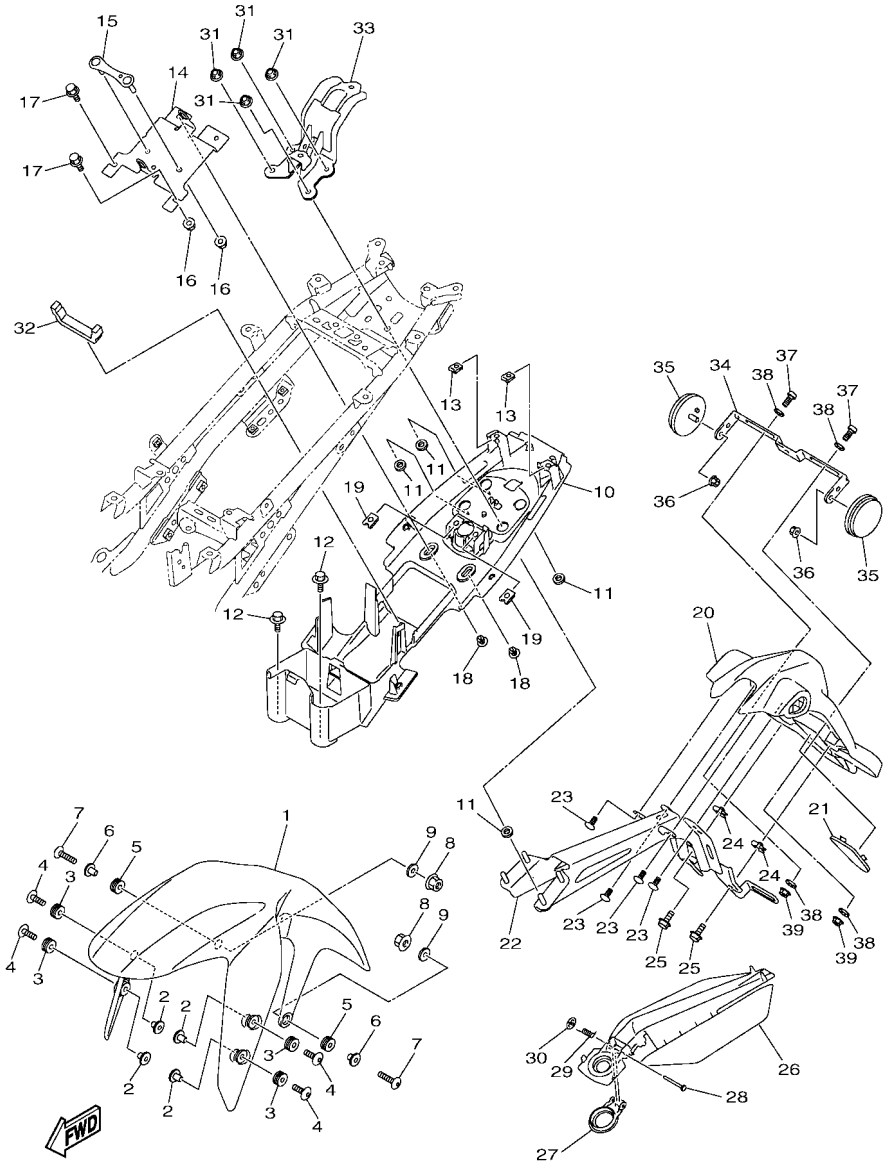

BHM2440-W180

FIG. 18 FENDER

REF. NO.	PART NO.	DESCRIPTION	BHM3					REMARKS
1	BG7–F1511–00–P6	FENDER, FRONT	1					UR FOR DPBMC
	BG7–F1511–00–3E	FENDER, FRONT	1					UR FOR PGD
	BG7–F1511–00–P5	FENDER, FRONT	1					UR FOR MDNM8
2	90387–06205	COLLAR	4					
3	90480–12805	GROMMET	4					
4	90111–06137	BOLT,HEX. SOCKET BUTTON	4					
5	90480–12072	GROMMET	2					
6	90387–068P5	COLLAR	2					
7	90111–06847	BOLT,HEX. SOCKET BUTTON	2					
8	95702–06500	NUT, FLANGE	2					
9	90201–06029	WASHER, PLATE	2					
10	B7D–F1611–00	FENDER, REAR	1					
11	90560–08326	SPACER	4					
12	90109–06220	BOLT	2					
13	90183–05807	NUT, SPRING	2					
14	B7D–H1975–00	PLATE, RECTIFIER FITTING	1					
15	B8D–F1682–00	STAY, PLATE	1					
16	95607–06200	NUT, SELF U-FLANGE	2					
17	95822–06012	BOLT, FLANGE	2					
18	90269–06816	RIVET	2					
19	90183–06800	NUT, SPRING	2					
20	B7D–F1629–00	GUARD, MUD	1					
21	B8D–F163E–00	COVER, REAR FENDER 2	1					
22	B8D–F1640–00	REAR STAY COMP.	1					
23	97702–50016	SCREW,TAPPING	4					
24	90183–050A7	NUT, SPRING	2					
25	90119–05071	BOLT, WITH WASHER	2					

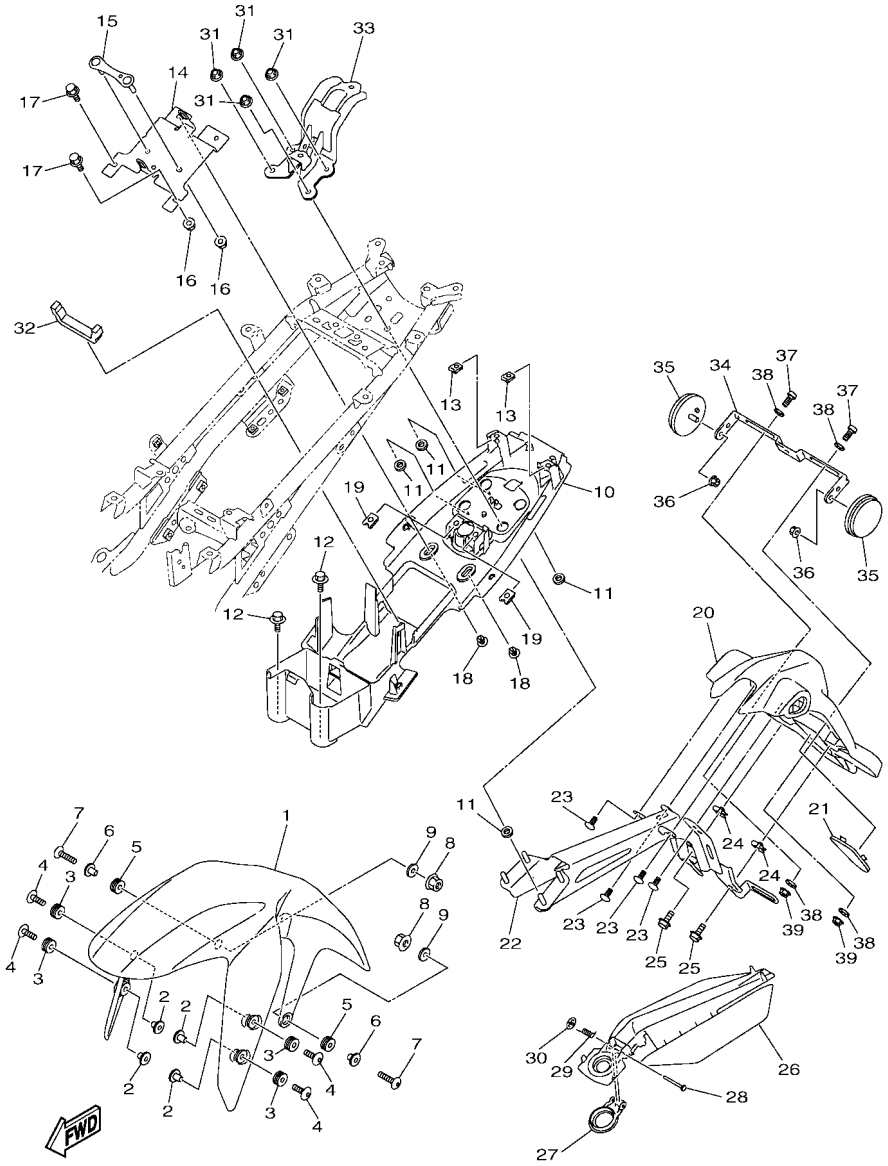

BHM2440-W180

FIG. 18 FENDER

REF. NO.	PART NO.	DESCRIPTION	BHM3					REMARKS
26	B7D–F163A–01	COVER, REAR FENDER 1	1					
27	B8D–F465B–01	CAP, ROTOR	1					
28	90241–03800	PIN	1					
29	90508–09007	SPRING, TORSION	1					
30	90183–03010	NUT, SPRING	1					
31	95602–06200	NUT, SELF-LOCKING	4					
32	90520–08804	DAMPER, PLATE	1					
33	B8D–F1391–00	BRACKET, SEAT	1					
34	B2S–F1641–01	BRACKET, REFLECTOR	1					
35	2FC–H5111–00	REFLECTOR, 1	2					
36	95707–05500	NUT, FLANGE	2					
37	98507–06020	SCREW, PAN HEAD	2					
38	90201–06557	WASHER, PLATE	4					
39	95602–06200	NUT, SELF-LOCKING	2					

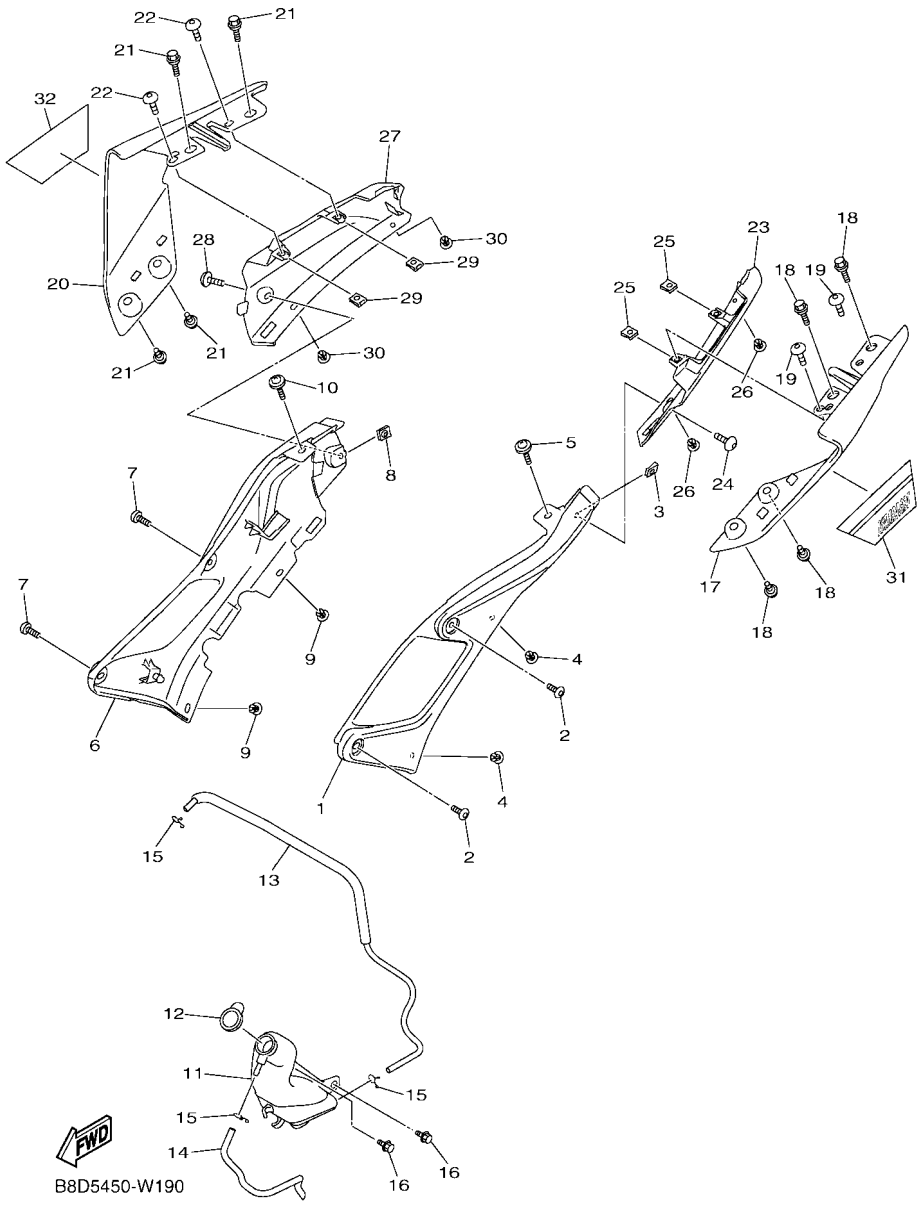

FIG. 19 SIDE COVER

REF. NO.	PART NO.	DESCRIPTION	BHM3					REMARKS
1	B7D–F1711–00	COVER, SIDE 1	1					
2	90111–06856	BOLT,HEX. SOCKET BUTTON	2					
3	90183–05807	NUT, SPRING	1					
4	90269–06816	RIVET	2					
5	90159–06860	SCREW, WITH WASHER	1					
6	B7D–F1721–00	COVER, SIDE 2	1					
7	90111–06856	BOLT,HEX. SOCKET BUTTON	2					
8	90183–05807	NUT, SPRING	1					
9	90269–06816	RIVET	2					
10	90159–06860	SCREW, WITH WASHER	1					
11	BK6–F1871–00	TANK, RECOVERY	1					
12	1S7–F1875–01	CAP	1					
13	BK7–F1817–00	PIPE 2	1					
14	BK6–F247A–01	HOSE 1	1					
15	90467–08003	CLIP	3					
16	90109–06220	BOLT	2					
17	B8D–F1731–00–P5	COVER, SIDE 3	1					FOR DPBMC,MDNM8
	B8D–F1731–00–3E	COVER, SIDE 3	1					FOR PGD
18	90109–068B2	BOLT	4					
19	97707–50016	SCREW, TRUSS HEAD TAPPING	2					
20	B8D–F1741–00–P5	COVER, SIDE 4	1					FOR DPBMC,MDNM8
	B8D–F1741–00–3E	COVER, SIDE 4	1					FOR PGD
21	90109–068B2	BOLT	4					
22	97707–50016	SCREW, TRUSS HEAD TAPPING	2					
23	B7D–F171E–00	COVER, SIDE 5	1					
24	97707–50016	SCREW, TRUSS HEAD TAPPING	1					
25	90183–05807	NUT, SPRING	2					

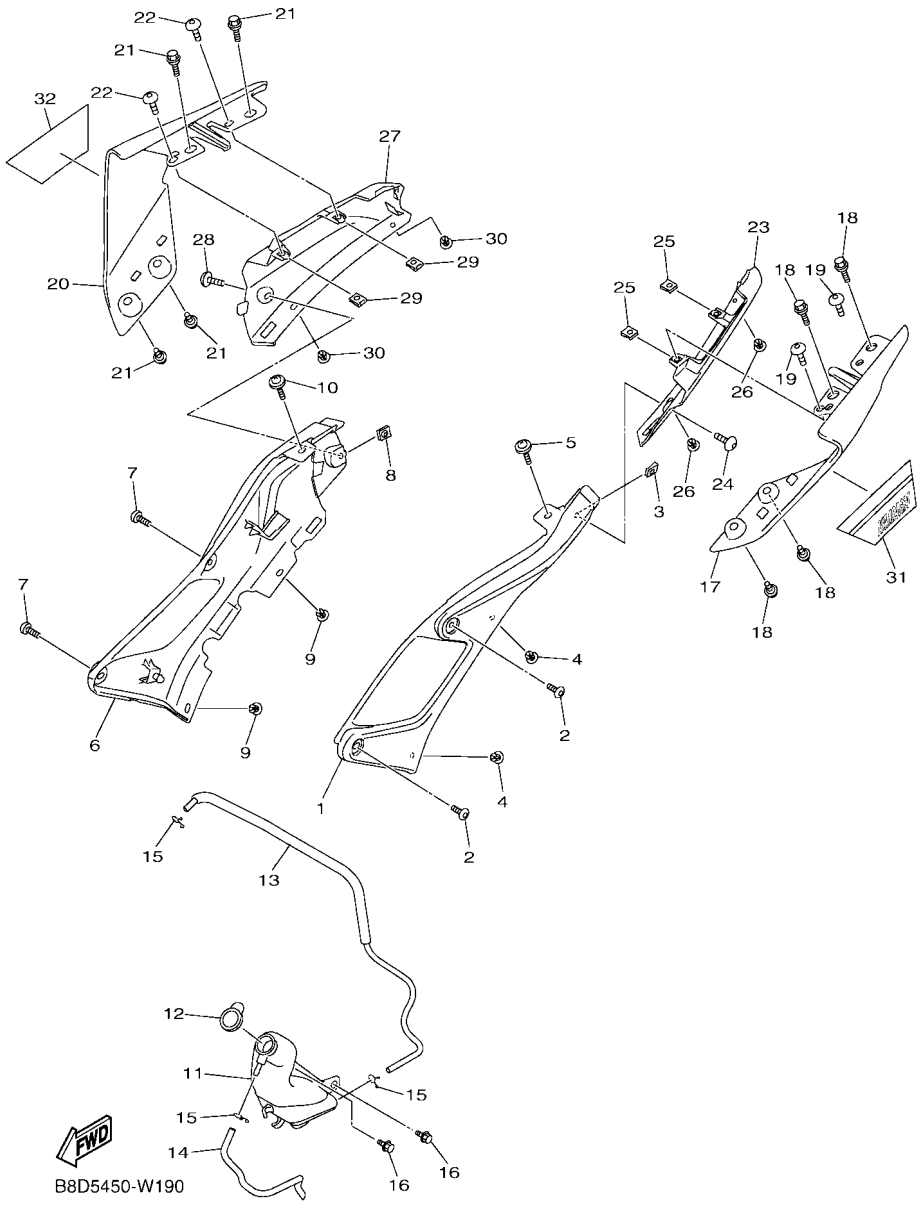

FIG. 19 SIDE COVER

REF. NO.	PART NO.	DESCRIPTION	BHM3					REMARKS
26	90269–06816	RIVET	2					
27	B7D–F171X–00	COVER, SIDE 6	1					
28	97707–50016	SCREW, TRUSS HEAD TAPPING	1					
29	90183–05807	NUT, SPRING	2					
30	90269–06816	RIVET	2					
31	B8D–F173E–30	GRAPHIC 1	1					UR FOR DPBMC
	B8D–F173E–40	GRAPHIC 1	1					UR FOR PGD
	B8D–F173E–20	GRAPHIC 1	1					UR FOR MDNM8
32	B8D–F173F–30	GRAPHIC 2	1					UR FOR DPBMC
	B8D–F173F–40	GRAPHIC 2	1					UR FOR PGD
	B8D–F173F–20	GRAPHIC 2	1					UR FOR MDNM8

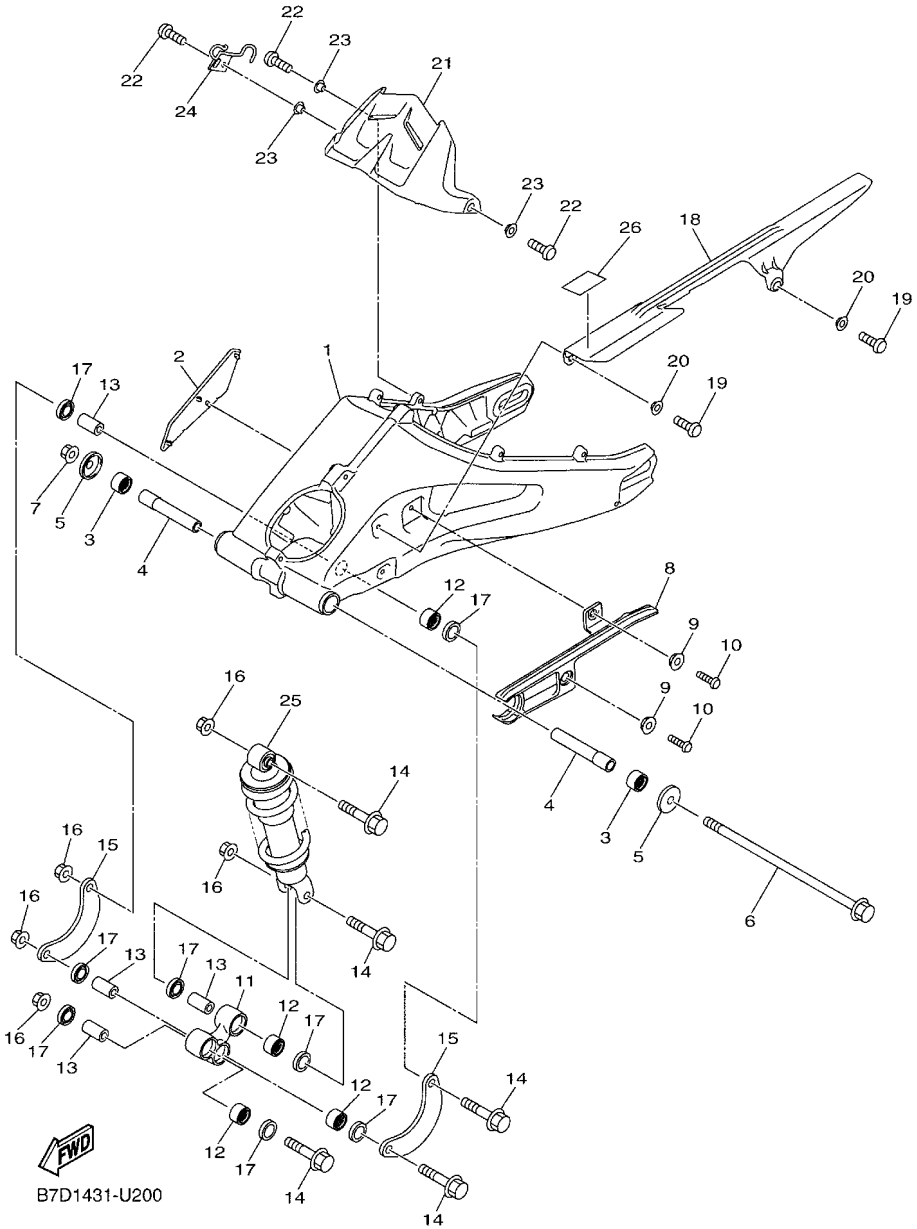

FIG. 20 REAR ARM & SUSPENSION

REF. NO.	PART NO.	DESCRIPTION	BHM3					REMARKS
1	BK6–F2110–00	REAR ARM COMP.	1					
2	BK7–F135F–00	COVER	1					
3	93317–218Y1	BEARING	2					
4	BK6–F2184–00	BUSH	2					
5	2PK–F2128–01	COVER, THRUST 1	2					
6	BK6–F2141–00	SHAFT, PIVOT	1					
7	95602–12200	NUT, SELF-LOCKING	1					
8	BK7–F2151–00	SEAL, GUARD	1					
9	90387–068S1	COLLAR	2					
10	92012–06016	BOLT, BUTTON HEAD	2					
11	1CK–F217A–00	ARM, RELAY	1					
12	93315–317Y1	BEARING	4					
13	90387–10814	COLLAR	4					
14	90105–10887	BOLT, FLANGE	5					
15	2PK–F217F–00	ROD, CONNECTING 1	2					
16	90179–10805	NUT	5					
17	93106–17801	OIL SEAL	8					
18	BK6–F2311–00	CASE, CHAIN	1					
19	92012–06016	BOLT, BUTTON HEAD	2					
20	90387–068S1	COLLAR	2					
21	BK7–F1650–01	REAR FENDER COMP.	1					
22	92012–06016	BOLT, BUTTON HEAD	3					
23	90387–068S1	COLLAR	3					
24	BK6–F587A–00	HOLDER, BRAKE HOSE 4	1					
25	B7D–F2210–00	SHOCK ABSORBER ASSY, REAR	1					
26	B8D–F1668–01	LABEL, TIRE	1					

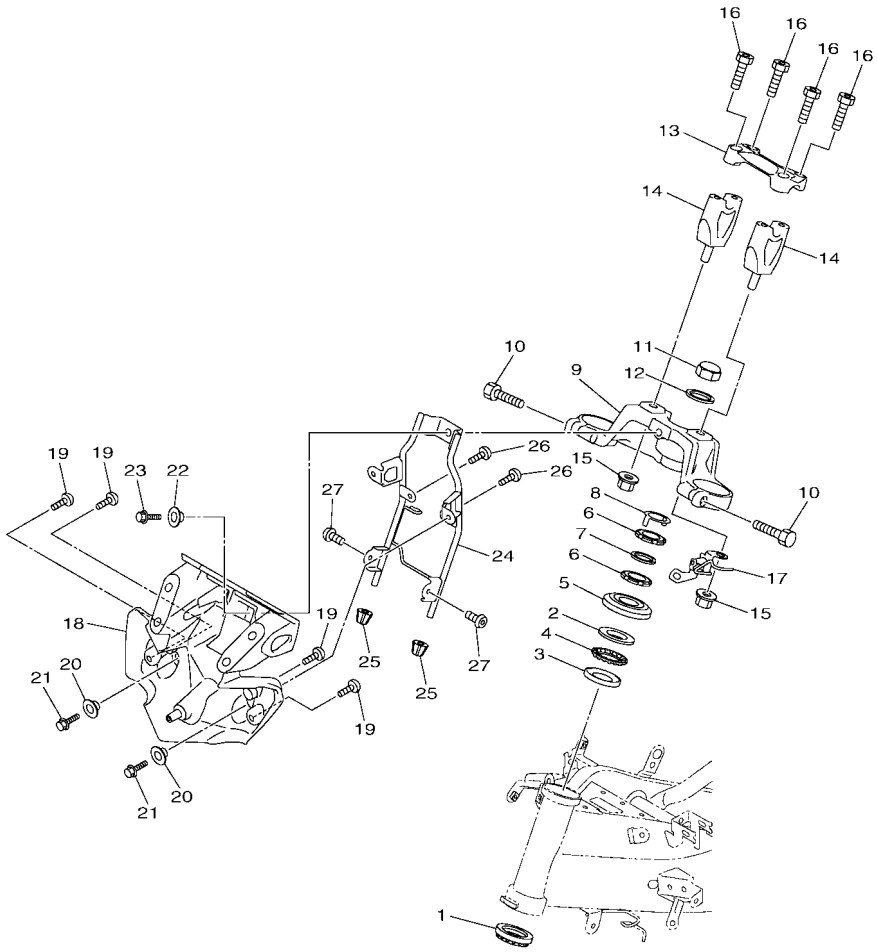

B7D1431-U210

FIG. 21 STEERING

REF. NO.	PART NO.	DESCRIPTION	BHM3					REMARKS
1	5BP–F3873–01	BEARING, STEERING UPPER	1					
2	4FP–F3411–20	RACE, BALL 1	1					
3	4FP–F3412–10	RACE, BALL 2	1					
4	5VL–F341E–10	RETAINER, BALL BEARING	1					
5	5BP–F3416–10	COVER, BALL RACE 2	1					
6	90179–25615	NUT	2					
7	90202–26142	WASHER, PLATE	1					
8	1PA–F3418–00	WASHER, SPECIAL	1					
9	B8D–F3435–00	CROWN, HANDLE	1					
10	91317–08035	BOLT,HEX.SOCKET HEAD	2					
11	90176–22081	NUT, CAP	1					
12	90201–220T0	WASHER, PLATE	1					
13	B48–F3441–00	HOLDER, HANDLE UPPER	1					
14	B48–F3442–01	HOLDER, HANDLE LOWER	2					
15	90185–10815	NUT, SELF-LOCKING	2					
16	91317–08030	BOLT,HEX.SOCKET HEAD	4					
17	B8D–F3175–00	BRACKET, HEADLIGHT STAY 1	1					
18	B8D–H4130–00	BODY ASSY, HEADLIGHT	1					
19	97707–50012	SCREW, TRUSS HEAD TAPPING	4					
20	90387–068S1	COLLAR	2					
21	95027–06014	BOLT, FLANGE	2					
22	90387–08079	COLLAR	1					
23	95022–08020	BOLT, FLANGE	1					
24	B8D–F3174–00	STAY, HEADLIGHT	1					
25	BG7–F317J–00	DAMPER 1	2					
26	90154–05041	SCREW, BINDING	2					
27	90111–05003	BOLT,HEX. SOCKET BUTTON	2					

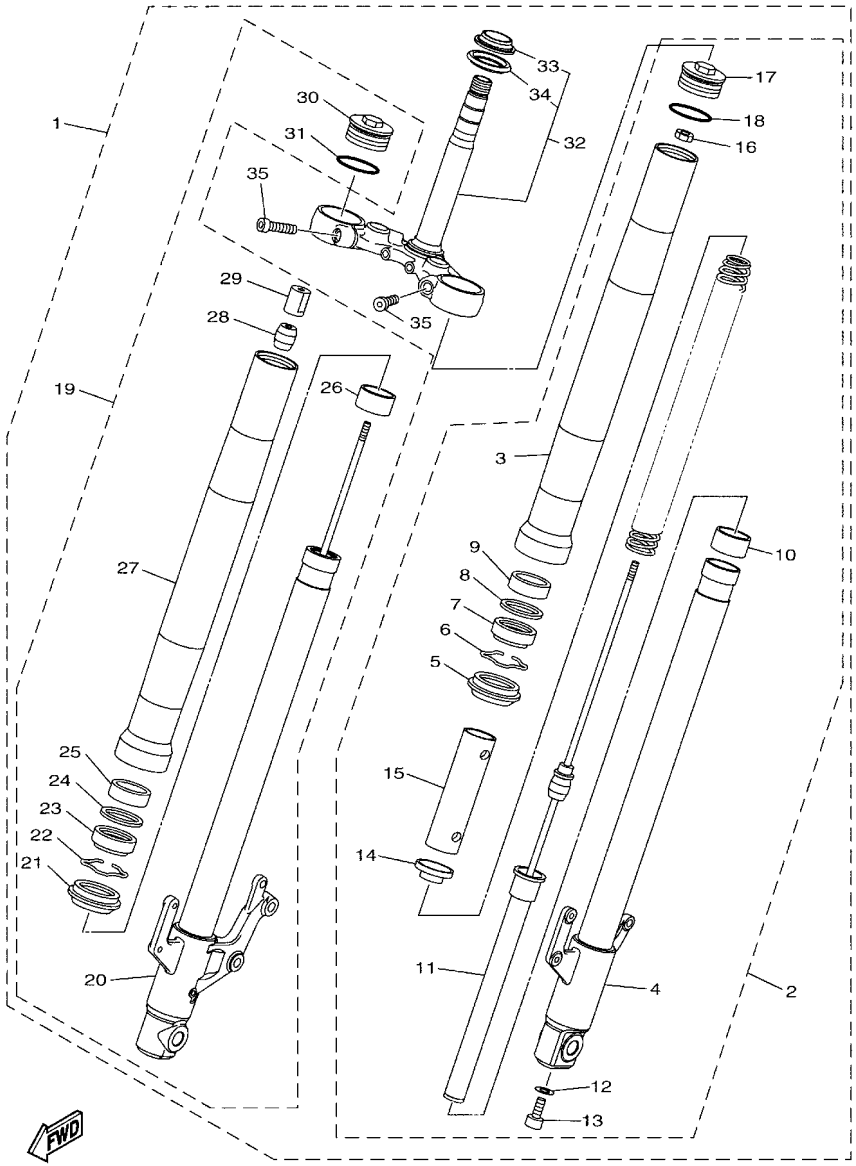

B7D1431-U220

FIG. 22 FRONT FORK

REF. NO.	PART NO.	DESCRIPTION	BHM3					REMARKS
1	B7D–F3100–00	FRONT FORK ASSY	1					
2	B7D–F3102–00	.FRONT FORK ASSY (L.H)	1					
3	B7D–F3126–00	..TUBE, OUTER	1					
4	B7D–F3110–00	..INNER TUBE COMP.1	1					
5	B48–F3144–00	..SEAL, DUST	1					
6	B48–F3156–00	..RING, SNAP	1					
7	BK6–F3145–00	..OIL SEAL	1					
8	B48–F3146–00	..WASHER, OIL SEAL	1					
9	31A–23125–31	..METAL, SLIDE 1	1					
10	B48–F3171–00	..PISTON, FRONT FORK	1					
11	B7D–F3170–00	..CYLINDER COMP., FRONT FORK	1					
12	B48–F3158–00	..GASKET	1					
13	4TU–F3356–00	..BOLT 2	1					
14	B7D–F3117–00	..GUIDE, SPRING	1					
15	B7D–F3118–00	..SPACER	1					
16	B7D–F3357–00	..NUT	1					
17	B48–F3111–00	..BOLT, CAP	1					
18	B48–F3147–00	..O-RING	1					
19	B7D–F3103–00	.FRONT FORK ASSY (R.H)	1					
20	B7D–F3120–00	..INNER TUBE COMP.2	1					
21	B48–F3144–00	..SEAL, DUST	1					
22	B48–F3156–00	..RING, SNAP	1					
23	BK6–F3145–00	..OIL SEAL	1					
24	B48–F3146–00	..WASHER, OIL SEAL	1					
25	31A–23125–31	..METAL, SLIDE 1	1					
26	B48–F3171–00	..PISTON, FRONT FORK	1					
27	B7D–F3126–00	..TUBE, OUTER	1					

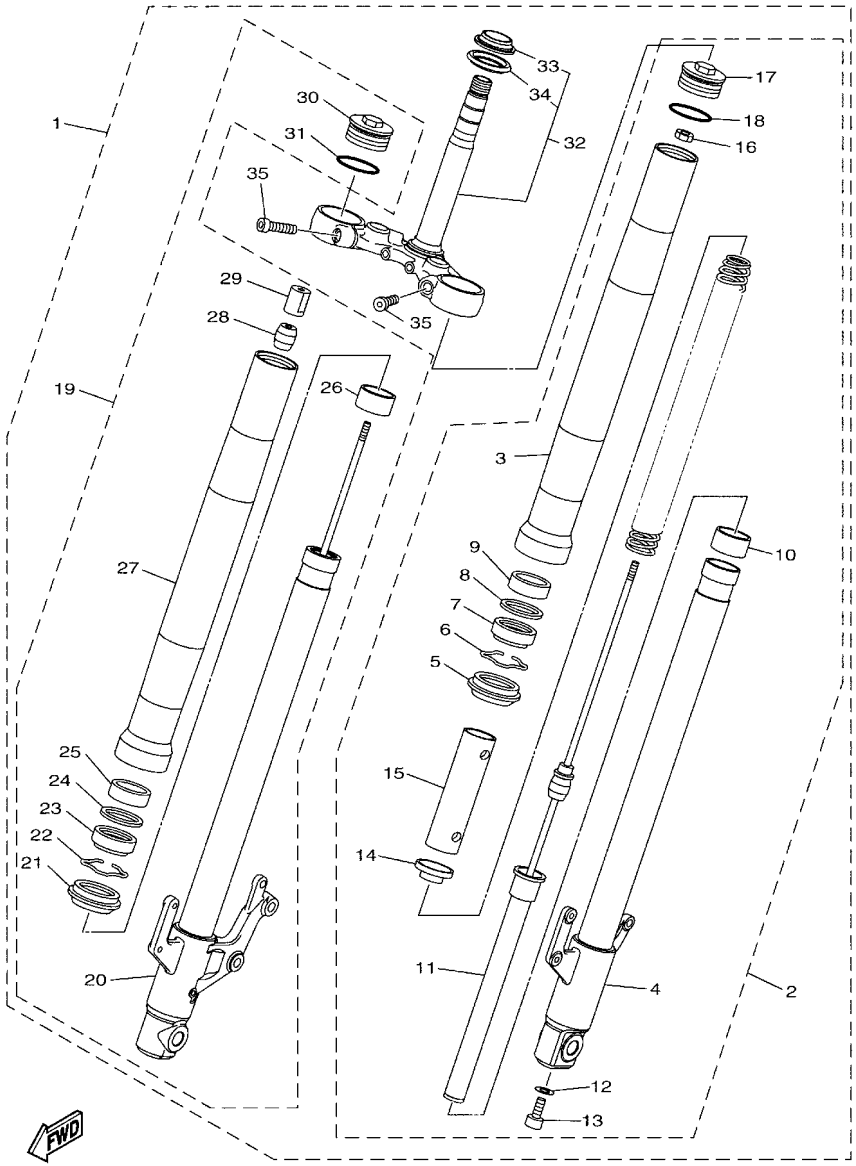

B7D1431-U220

FIG. 22 FRONT FORK

REF. NO.	PART NO.	DESCRIPTION	BHM3					REMARKS
28	BK6–F332K–00	..BUMP, STOP	1					
29	B7D–F3393–00	..NUT, SPECIAL	1					
30	B48–F3111–00	..BOLT, CAP	1					
31	B48–F3147–00	..O-RING	1					
32	B7D–F3340–00	.UNDER BRACKET COMP.	1					
33	5BP–F3875–00	..BEARING, STEERING LOWER	1					
34	4TU–F3144–00	..SEAL, DUST	1					
35	91312–10040	.BOLT, HEXAGON SOCKET HEAD	2					

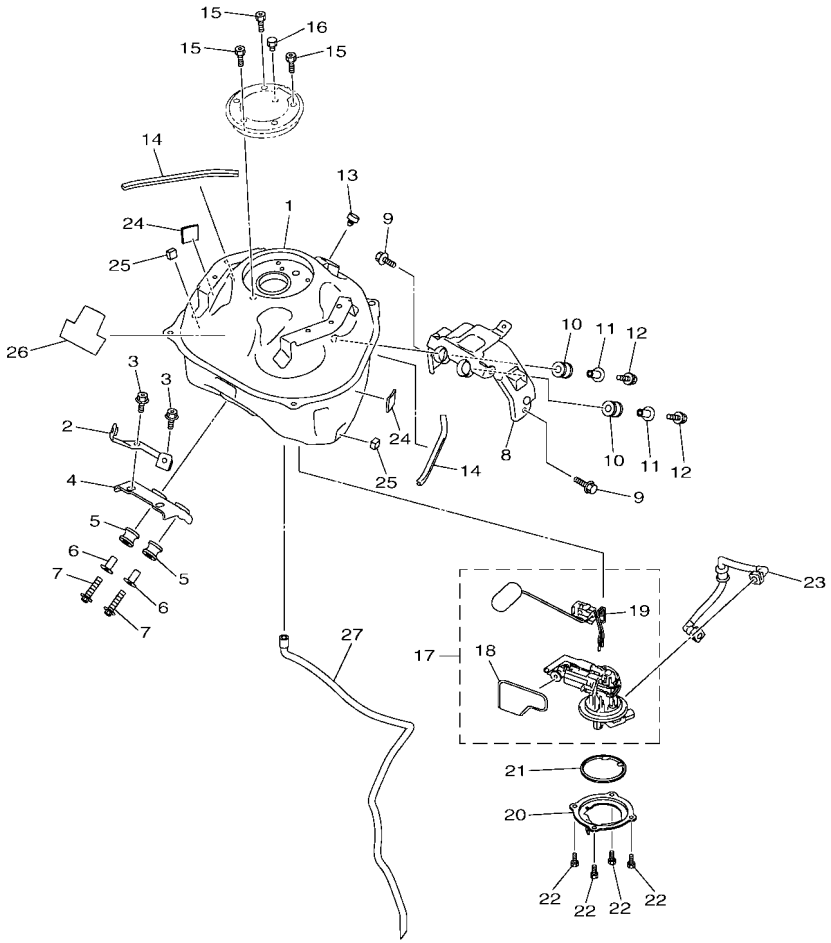

BHM1440-W230

FIG. 23 FUEL TANK

REF. NO.	PART NO.	DESCRIPTION	BHM3					REMARKS
1	B8D–F4110–10	FUEL TANK COMP.	1					
2	B8D–F411F–00	PLATE, FITTING	1					
3	90110–08052	BOLT, HEXAGON SOCKET HEAD	2					
4	B8D–F412Y–00	BRACKET, TANK FITTING	1					
5	90480–18813	GROMMET	2					
6	90387–068M3	COLLAR	2					
7	95022–06030	BOLT, FLANGE	2					
8	B8D–F4191–00	BRACKET, FUEL TANK 1	1					
9	90110–06245	BOLT, HEXAGON SOCKET HEAD	2					
10	90480–18813	GROMMET	2					
11	90387–068M3	COLLAR	2					
12	95022–06030	BOLT, FLANGE	2					
13	1PA–F1717–00	DAMPER	1					
14	B8D–F4188–00	MOLD, FUEL TANK	2					
15	90110–05806	BOLT, HEXAGON SOCKET HEAD	3					
16	91312–05010	BOLT, HEXAGON SOCKET HEAD	1					
17	B7D–E3907–00	FUEL PUMP COMP.	1					
18	54P–E3915–00	.FILTER, FUEL SUCTION	1					
19	B7D–H5752–00	.SENDER UNIT ASSY, FUEL METER	1					
20	BK6–F4491–00	BRACKET, FUEL PUMP	1					
21	54P–F414G–10	SEAL	1					
22	91312–05010	BOLT, HEXAGON SOCKET HEAD	4					
23	BDJ–E3971–00	PIPE, FUEL 1	1					
24	90520–03800	DAMPER, PLATE	2					
25	90520–08007	DAMPER, PLATE	2					
26	B8D–F414J–00	DAMPER, PLATE 2	1					
27	BK7–F4312–00	PIPE 2	1					

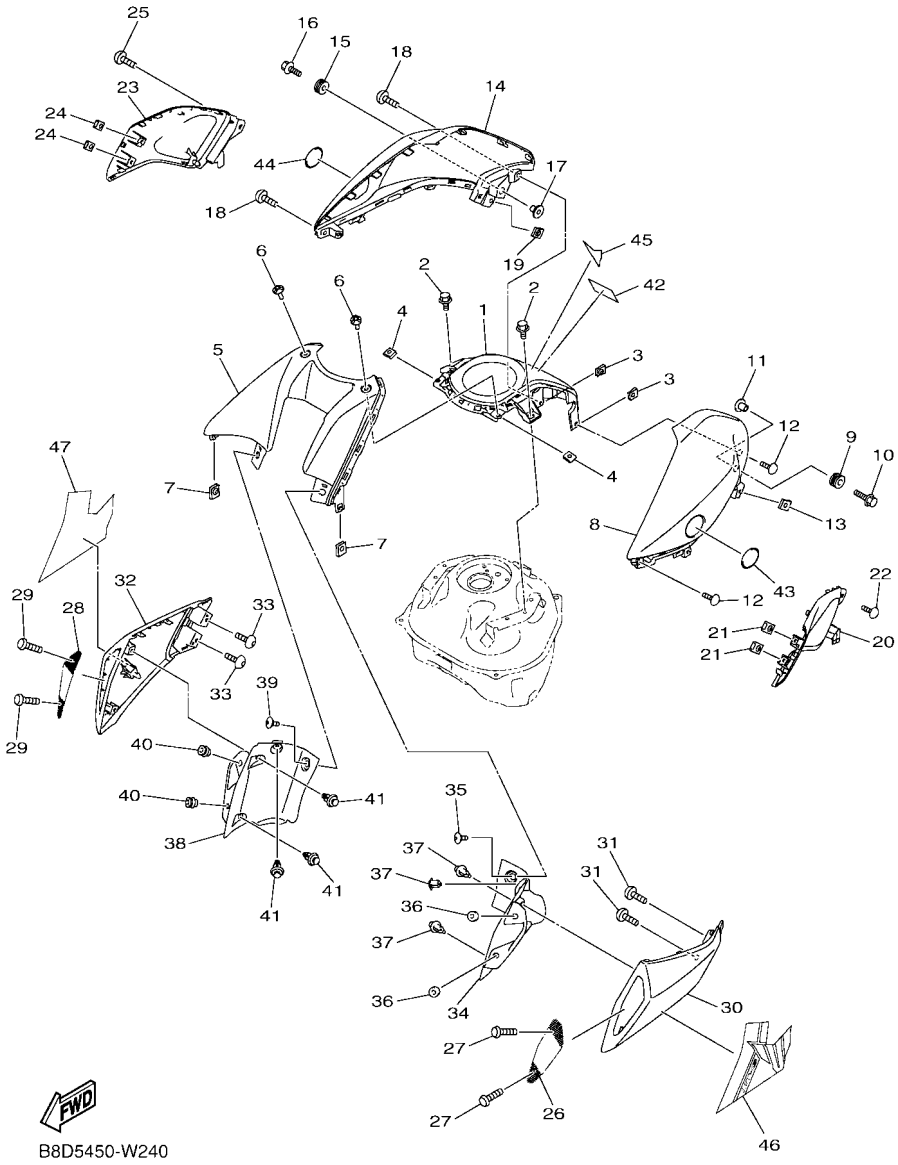

FIG. 24 FUEL TANK 2

REF. NO.	PART NO.	DESCRIPTION	BHM3					REMARKS
1	B8D–F41B1–00–P1	COVER, TANK	1					UR FOR DPBMC
	B8D–F41B1–00–P5	COVER, TANK	1					UR FOR PGD
	B8D–F41B1–00–P3	COVER, TANK	1					UR FOR MDNM8
2	90109–06202	BOLT	2					
3	90183–05807	NUT, SPRING	2					
4	90183–050A7	NUT, SPRING	2					
5	B7D–F836K–00	PANEL, INNER 1	1					
6	90111–05817	BOLT,HEX. SOCKET BUTTON	2					
7	90183–05807	NUT, SPRING	2					
8	B8D–F4129–00–P3	COVER, SIDE 1	1					UR FOR DPBMC
	B8D–F4129–00–3E	COVER, SIDE 1	1					UR FOR PGD
	B8D–F4129–00–P5	COVER, SIDE 1	1					UR FOR MDNM8
9	90480–12808	GROMMET	1					
10	90119–06810	BOLT, WITH WASHER	1					
11	90387–06899	COLLAR	1					
12	97702–50016	SCREW,TAPPING	2					
13	90183–05807	NUT, SPRING	1					
14	B8D–F4139–00–P3	COVER, SIDE 2	1					UR FOR DPBMC
	B8D–F4139–00–3E	COVER, SIDE 2	1					UR FOR PGD
	B8D–F4139–00–P5	COVER, SIDE 2	1					UR FOR MDNM8
15	90480–12808	GROMMET	1					
16	90119–06810	BOLT, WITH WASHER	1					
17	90387–06899	COLLAR	1					
18	97702–50016	SCREW,TAPPING	2					
19	90183–05807	NUT, SPRING	1					
20	B7D–F4121–00	SEAT, KNEE GRIP 1	1					
21	90183–05807	NUT, SPRING	2					

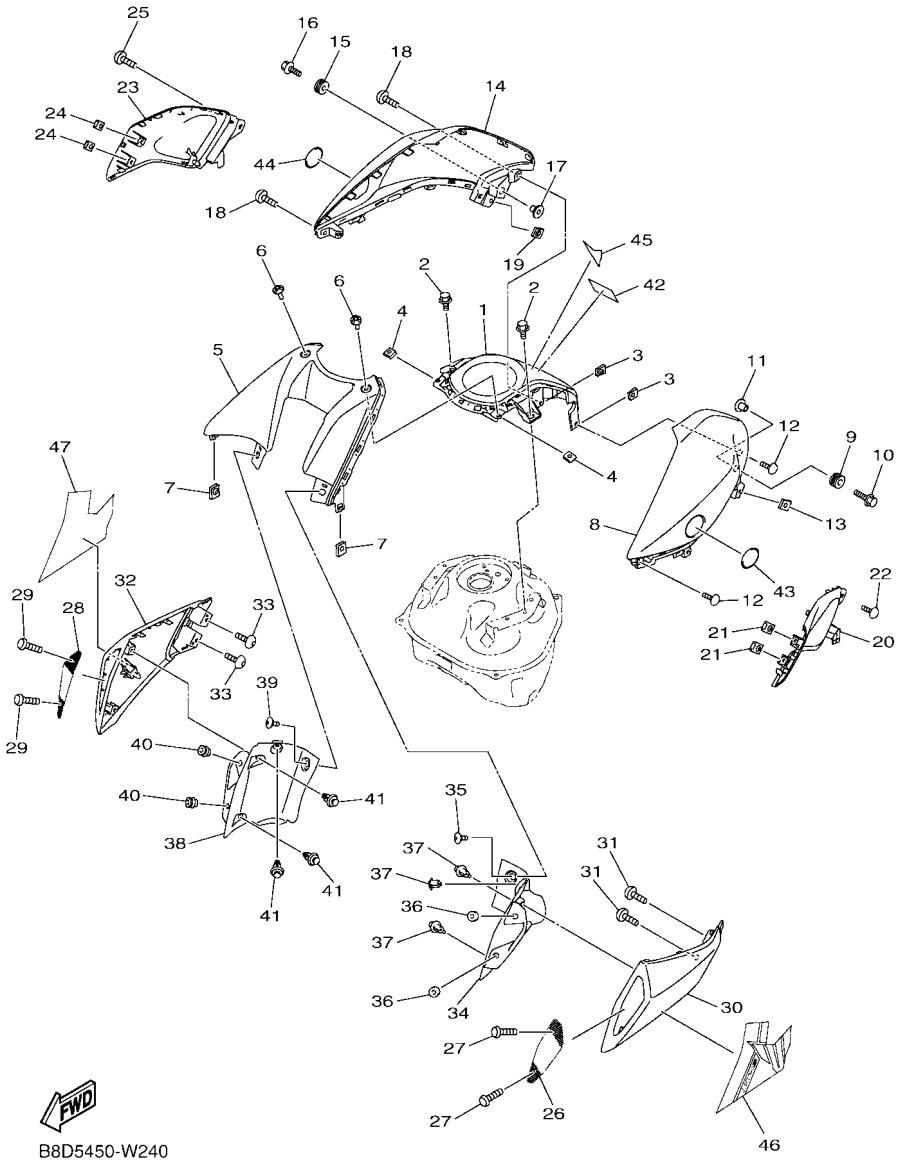

FIG. 24 FUEL TANK 2

REF. NO.	PART NO.	DESCRIPTION	BHM3					REMARKS
22	97702–50016	SCREW,TAPPING	1					
23	B7D–F4122–00	SEAT, KNEE GRIP 2	1					
24	90183–05807	NUT, SPRING	2					
25	97702–50016	SCREW,TAPPING	1					
26	B7D–F837V–00	GRILL, AIR OUTLET 1	1					
27	92017–05016	BOLT, BUTTON HEAD	2					
28	B7D–F837W–00	GRILL, AIR OUTLET 2	1					
29	92017–05016	BOLT, BUTTON HEAD	2					
30	B8D–F137W–00–P3	SCOOP, AIR 1	1					UR FOR DPBMC
	B8D–F137W–00–P5	SCOOP, AIR 1	1					UR FOR PGD
	B8D–F137W–00–P2	SCOOP, AIR 1	1					UR FOR MDNM8
31	97702–50012	SCREW, TAPPING	2					
32	B8D–F137X–00–P3	SCOOP, AIR 2	1					UR FOR DPBMC
	B8D–F137X–00–P5	SCOOP, AIR 2	1					UR FOR PGD
	B8D–F137X–00–P2	SCOOP, AIR 2	1					UR FOR MDNM8
33	97702–50012	SCREW, TAPPING	2					
34	B7D–F836L–00	PANEL, INNER 2	1					
35	90109–068C3	BOLT	1					
36	90179–05849	NUT	2					
37	90269–06816	RIVET	3					
38	B7D–F836M–00	PANEL, INNER 3	1					
39	90109–068C3	BOLT	1					
40	90179–05849	NUT	2					
41	90269–06816	RIVET	3					
42	B17–F1568–00	LABEL, WARNING	1					
43	2DP–F413B–00	EMBLEM	1					
44	2DP–F413B–00	EMBLEM	1					

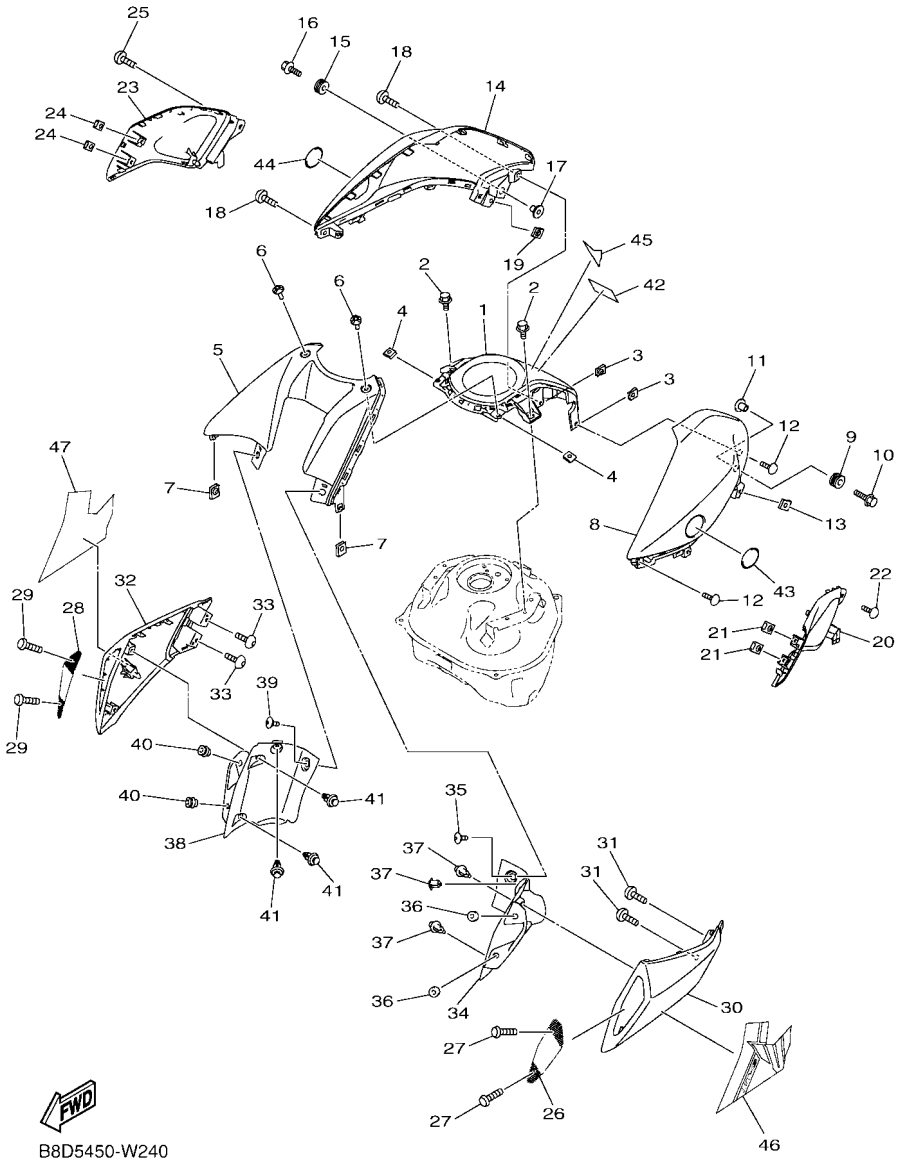

FIG. 24 FUEL TANK 2

REF. NO.	PART NO.	DESCRIPTION	BHM3					REMARKS
45	B04–F4254–F0	GRAPHIC, FUEL TANK 7	1					UR FOR DPBMC
	B04–F4254–H0	GRAPHIC, FUEL TANK 7	1					UR FOR PGD
	B04–F4254–E0	GRAPHIC, FUEL TANK 7	1					UR FOR MDNM8
46	B8D–F8393–70	GRAPHIC 3	1					UR FOR DPBMC
	B8D–F8393–80	GRAPHIC 3	1					UR FOR PGD
	B8D–F8393–60	GRAPHIC 3	1					UR FOR MDNM8
47	B8D–F8394–70	GRAPHIC 4	1					UR FOR DPBMC
	B8D–F8394–80	GRAPHIC 4	1					UR FOR PGD
	B8D–F8394–60	GRAPHIC 4	1					UR FOR MDNM8

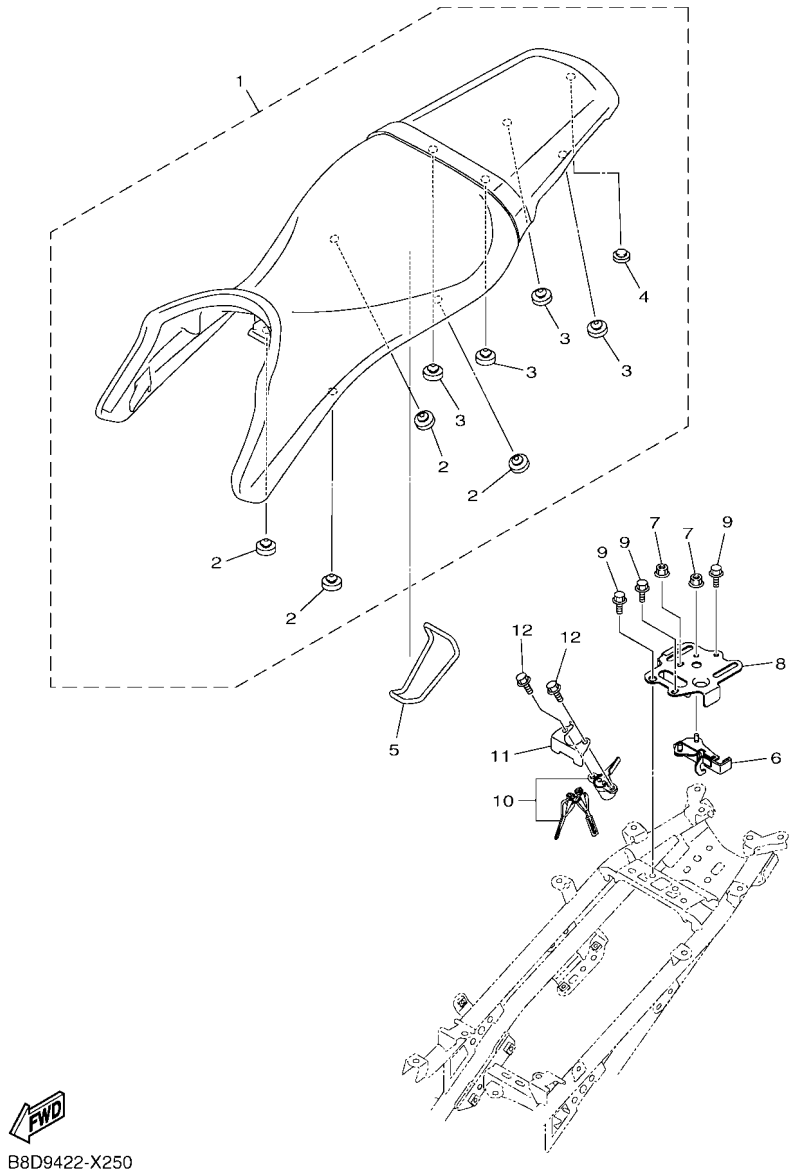

B8D9422-X250

FIG. 25 SEAT

REF. NO.	PART NO.	DESCRIPTION	BHM3					REMARKS
1	B9D–F4730–00	DOUBLE SEAT ASSY	1					
2	1PM–F4741–00	.PAD, SEAT	4					
3	4LS–F4741–00	.PAD, SEAT	4					
4	B9D–F4741–00	.PAD, SEAT	1					
5	5TL–H2131–00	BAND, BATTERY	1					
6	B9D–F4780–00	SEAT LOCK ASSY	1					
7	95707–06500	NUT, FLANGE	2					
8	B8D–F478X–00	BRACKET, SEAT LOCK	1					
9	95822–06014	BOLT, FLANGE	3					
10	B7D–WF479–00	COVER, TAIL	1					
11	B8D–F479K–00	PLATE, LOCK	1					
12	95022–06016	BOLT, FLANGE	2					

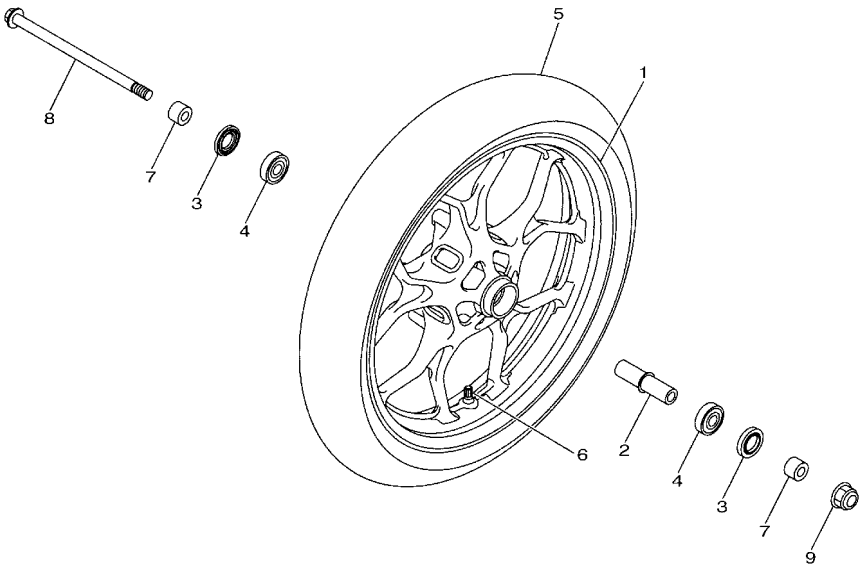

B7D1431-U260

FIG. 26 FRONT WHEEL

REF. NO.	PART NO.	DESCRIPTION	BHM3					REMARKS
1	1WD–F5168–03–P0	CAST WHEEL, FRONT	1					UR FOR DPBMC
	1WD–F5168–03–P3	CAST WHEEL, FRONT	1					UR FOR PGD
	1WD–F5168–03–98	CAST WHEEL, FRONT	1					UR FOR MDNM8
2	1WD–F510C–01	COLLAR ASSY.	1					
3	93106–26815	OIL SEAL	2					
4	93306–302YN	BEARING	2					
5	94111–17801	TIRE (110/70-17M/C 54S RX-01F)	1					INOUE
6	93900–00824	VALVE, RIM	1					
7	1PA–F5386–00	COLLAR, SPROCKET AXLE	2					
8	BG7–F5181–00	AXLE, WHEEL	1					
9	95602–14200	NUT, SELF-LOCKING	1					

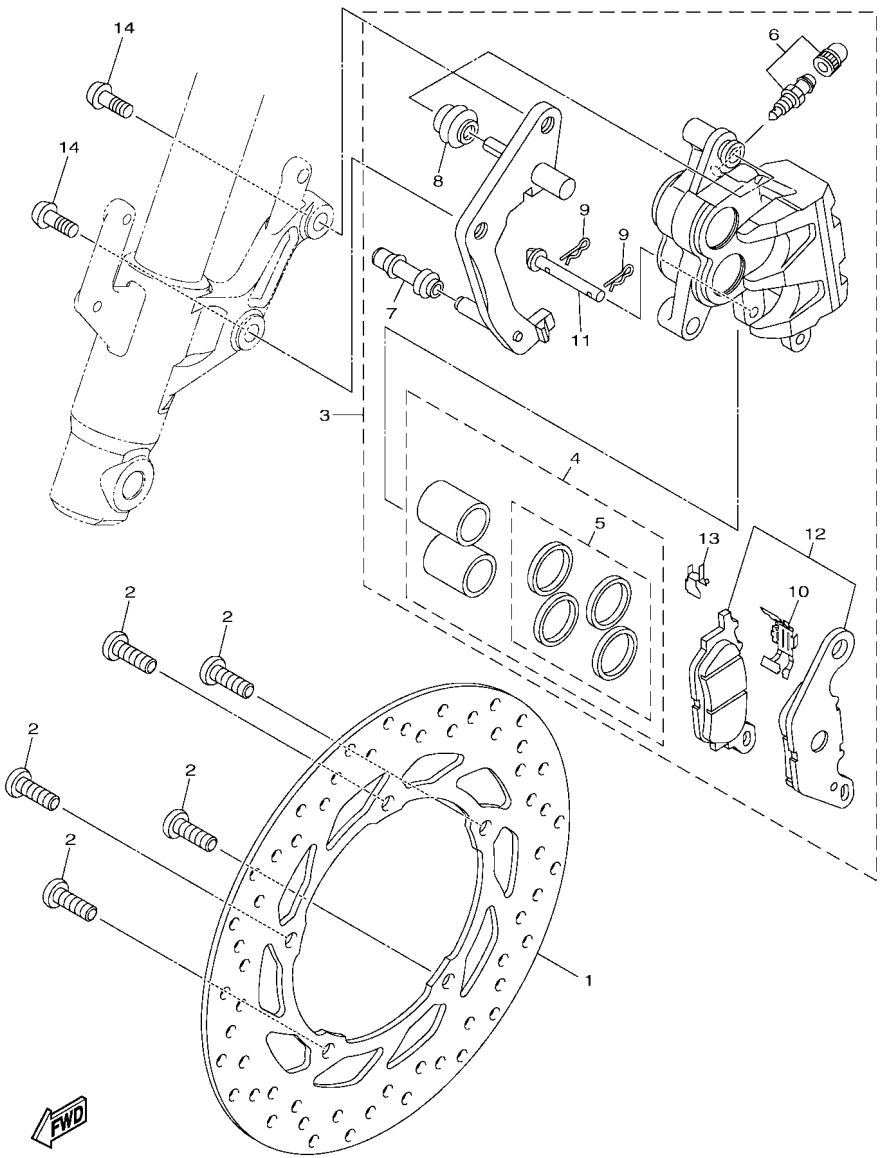

BHM1440-W270

FIG. 27 FRONT BRAKE CALIPER

REF. NO.	PART NO.	DESCRIPTION	BHM3					REMARKS
1	1CK–F582U–00	DISK, BRAKE (RIGHT)	1					
2	90111–08087	BOLT,HEX. SOCKET BUTTON	5					
3	B48–F580U–01	CALIPER ASSY (RIGHT)	1					
4	3C1–F5802–00	.PISTON ASSY, CALIPER	1					
5	3C1–F5803–50	..CALIPER SEAL KIT	1					
6	4C9–W0048–00	.BLEED SCREW KIT	1					
7	5YP–F5937–00	.BOOT 2	1					
8	5YP–F5917–00	.BOOT, CALIPER	1					
9	5YP–F5925–01	.CLIP	2					
10	5P0–F5919–01	.SUPPORT, PAD	1					
11	5YP–F5924–00	.PIN, PAD	1					
12	3C1–F5805–10	.BRAKE PAD KIT	1					
13	5YP–F5939–00	.CLIP, PAD	1					
14	90149–10804	SCREW	2					

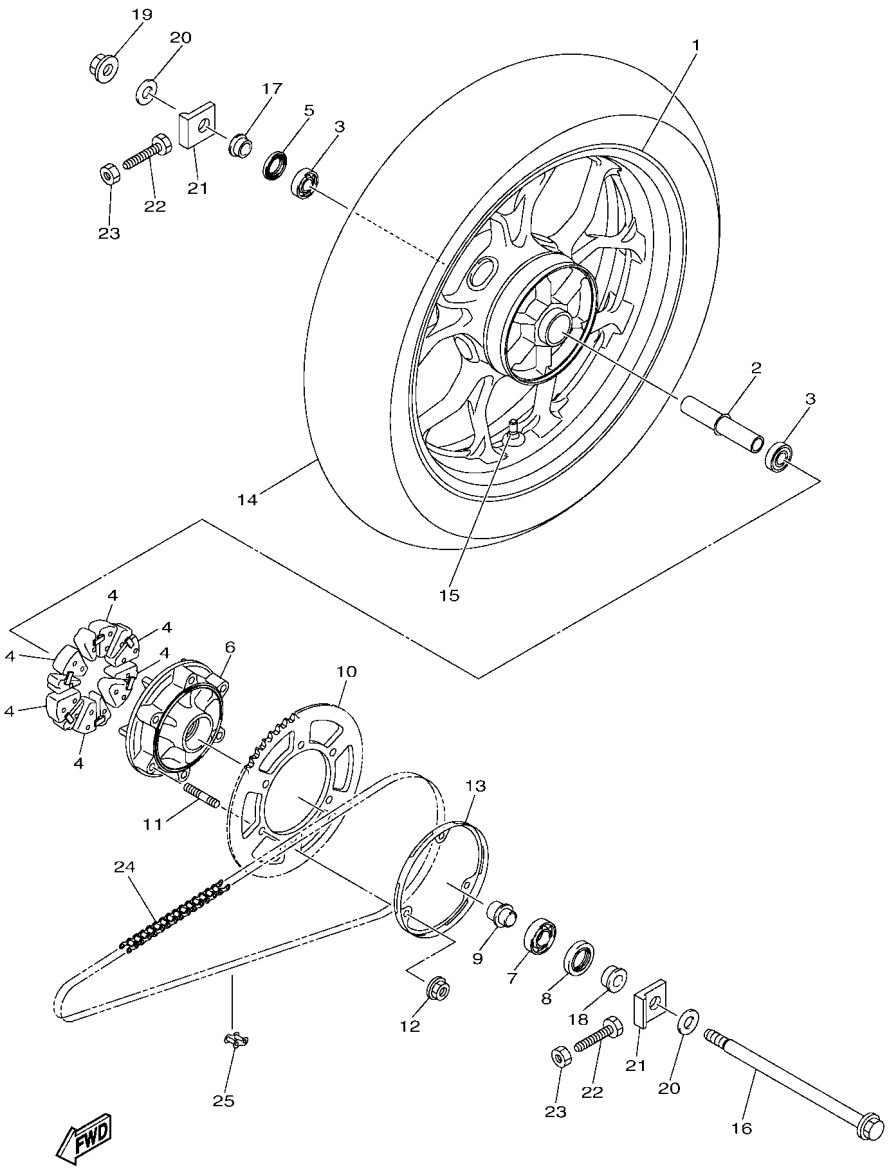

FIG. 28 REAR WHEEL

REF. NO.	PART NO.	DESCRIPTION	BHM3					REMARKS
1	B7D–F5338–10	CAST WHEEL, REAR	1					UR FOR DPBMC
	B7D–F5338–40	CAST WHEEL, REAR	1					UR FOR PGD
	B7D–F5338–00	CAST WHEEL, REAR	1					UR FOR MDNM8
2	B97–F530S–00	COLLAR ASSY	1					
3	93306–252YP	BEARING	2					
4	B97–F5364–00	DAMPER	6					
5	93106–22808	OIL SEAL	1					
6	BK6–F5366–01	CLUTCH, HUB	1					
7	93306–054XC	BEARING	1					
8	93106–26815	OIL SEAL	1					
9	B97–F5376–00	COLLAR, WHEEL	1					
10	B8D–F5452–00	SPROCKET, DRIVEN (52T)	1					
11	90116–08846	BOLT, STUD	6					
12	95602–08200	NUT, U FLANGE	6					
13	BK6–F5414–00	SPACER	1					
14	94114–17802	TIRE (140/70-17M/C 66S RX-01R)	1					INOUE
15	93900–00824	VALVE, RIM	1					
16	5BP–F5381–00	AXLE, WHEEL	1					
17	B97–F5377–00	COLLAR, WHEEL	1					
18	B97–F5383–00	COLLAR, WHEEL	1					
19	95602–14200	NUT, SELF-LOCKING	1					
20	90201–15814	WASHER, PLATE	2					
21	1CK–F5388–00	PULLER, CHAIN 1	2					
22	90101–08006	BOLT	2					
23	95302–08700	NUT, HEXAGON	2					
24	94568–K1131	CHAIN	1					
25	94668–K1021	JOINT, CHAIN(DID428VIX2 ZJ)	1					

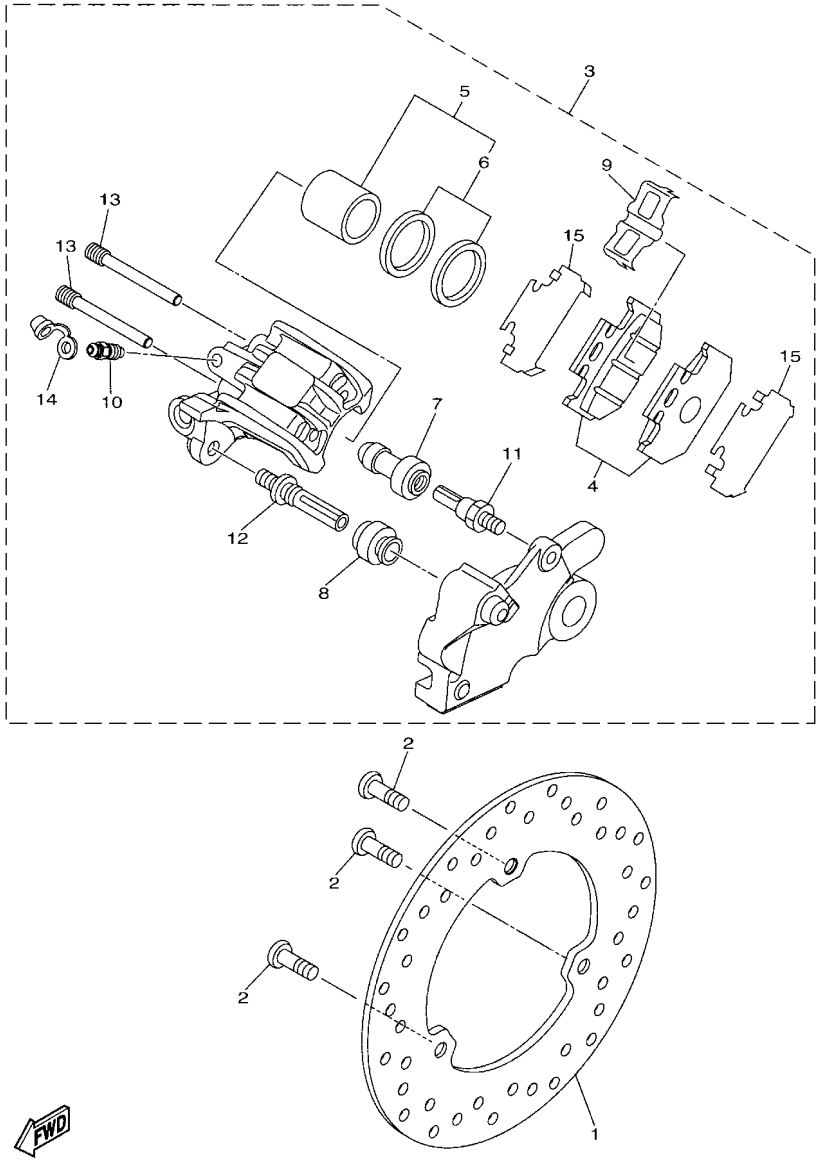

B7D1431-U290

FIG. 29 REAR BRAKE CALIPER

REF. NO.	PART NO.	DESCRIPTION	BHM3					REMARKS
1	BK6–F582W–00	DISK, REAR BRAKE 2	1					
2	90111–08089	BOLT,HEX. SOCKET BUTTON	3					
3	B97–F580W–00	CALIPER ASSY, REAR 2	1					
4	B97–F5806–00	.BRAKE PAD KIT 2	1					
5	5XT–25802–50	.PISTON ASSY, CALIPER	1					
6	3JD–25803–50	..CALIPER SEAL KIT	1					
7	5HH–F5937–00	.BOOT 2	1					
8	5HH–F5917–00	.BOOT, CALIPER	1					
9	3SP–25919–51	.SUPPORT, PAD	1					
10	5HH–F5824–00	.SCREW, BLEED	1					
11	5HH–F5914–00	.PIN, SLIDE	1					
12	3SP–25926–51	.BOLT	1					
13	3SP–25924–51	.PIN, PAD	2					
14	5HH–F5825–51	.CAP	1					
15	5XT–25827–00	.SHIM, CALIPER	2					

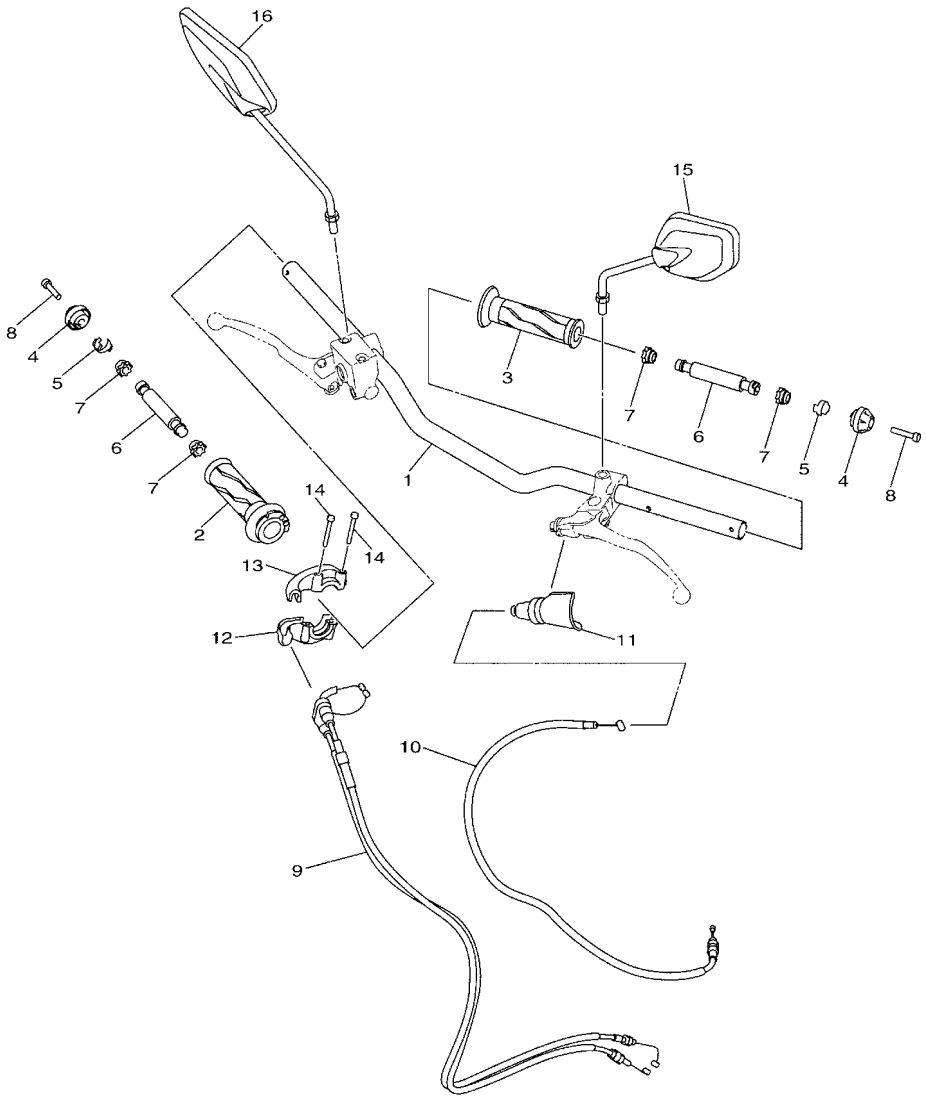

B7D1431-U300

FIG. 30 STEERING HANDLE & CABLE

REF. NO.	PART NO.	DESCRIPTION	BHM3					REMARKS
1	B8D–F6111–00	HANDLEBAR	1					
2	1CK–F6240–01	GRIP ASSY	1					
3	20P–F6241–01	GRIP	1					
4	2PK–F6246–00	END, GRIP	2					
5	1S7–F6257–00	STOPPER	2					
6	1S7–F622H–00	WEIGHT	2					
7	1S7–F622F–00	DAMPER, LOCATING 1	4					
8	91317–06030	BOLT,HEX.SOCKET HEAD	2					
9	B8D–F6301–00	THROTTLE CABLE ASSY	1					
10	B8D–F6335–00	WIRE, CLUTCH	1					
11	3RS–F6372–00	COVER, HANDLE LEVER 1	1					
12	B7D–F6281–00	CAP, GRIP UPPER	1					
13	B7D–F6282–00	CAP, GRIP UNDER	1					
14	91317–05035	BOLT,HEX.SOCKET HEAD	2					
15	2CB–F6280–20	REAR VIEW MIRROR ASSY (LEFT)	1					
16	2CB–F6290–20	REAR VIEW MIRROR ASSY (RIGHT)	1					

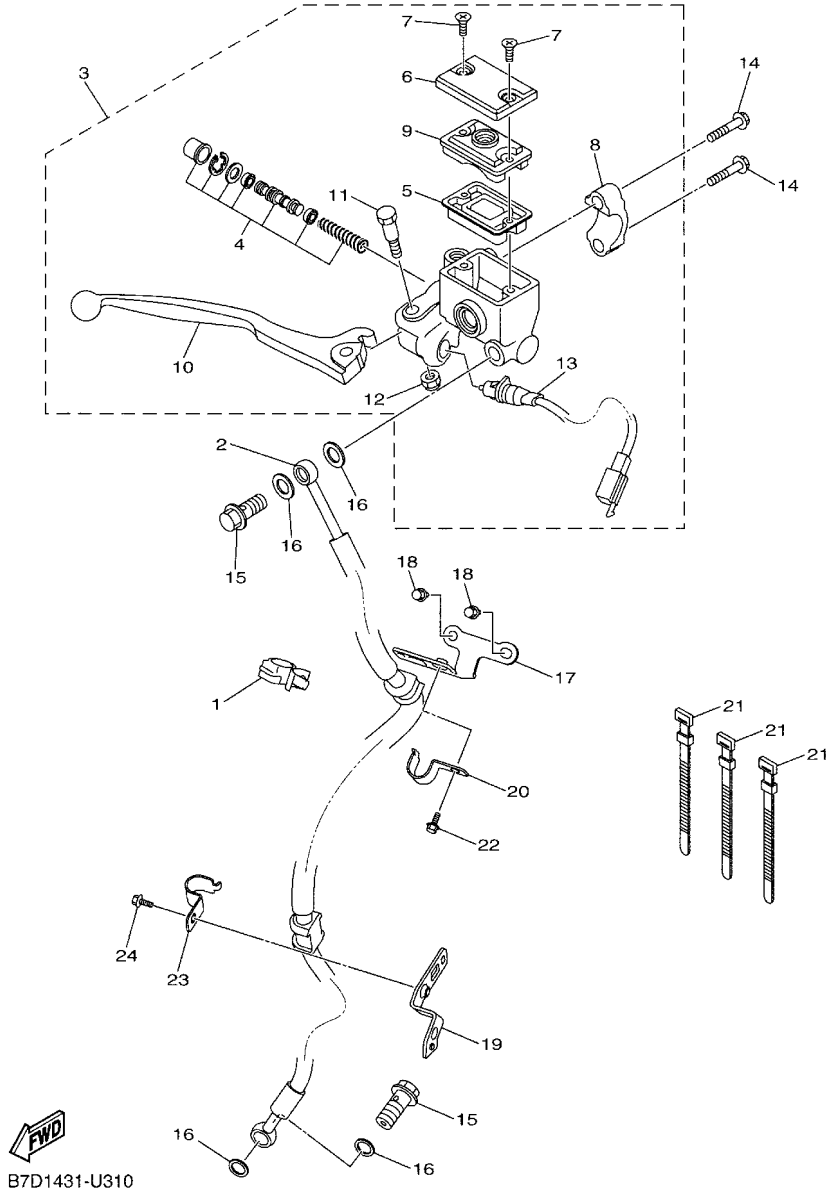

FIG. 31 FRONT MASTER CYLINDER

REF. NO.	PART NO.	DESCRIPTION	BHM3					REMARKS
1	90464–18808	CLAMP	1					
2	B8D–F5872–00	HOSE, BRAKE 1	1					
3	B7D–F583T–01	MASTER CYLINDER ASSY	1					
4	5P0–F580A–00	.CYLINDER KIT, MASTER	1					
5	3RW–F5854–00	.DIAPHRAGM, RESERVOIR	1					
6	3C1–F5852–00	.CAP, RESERVOIR	1					
7	36Y–2589H–00	.SCREW	2					
8	3RW–F5867–00	.BRACKET, MASTER CYLINDER	1					
9	3C1–F5855–00	.BUSH,DIAPHRAGM	1					
10	38B–H3922–00	.LEVER 2	1					
11	90109–06577	.BOLT	1					
12	95602–06100	.NUT, SELF-LOCKING	1					
13	1YD–H3980–10	.FRONT STOP SWITCH ASSY	1					
14	95027–06025	BOLT, FLANGE	2					
15	90401–10812	BOLT, UNION	2					
16	90201–10118	WASHER, PLATE	4					
17	B8D–F5887–00	HOLDER, BRAKE HOSE 3	1					
18	95027–06010	BOLT, FLANGE	2					
19	B8D–F5876–00	HOLDER, BRAKE HOSE 2	1					
20	BG7–F5875–00	HOLDER, BRAKE HOSE 1	1					
21	3RS–H3936–00	BAND, SWITCH CORD	3					
22	95027–06010	BOLT, FLANGE	1					
23	BG7–F5875–00	HOLDER, BRAKE HOSE 1	1					
24	95027–06010	BOLT, FLANGE	1					

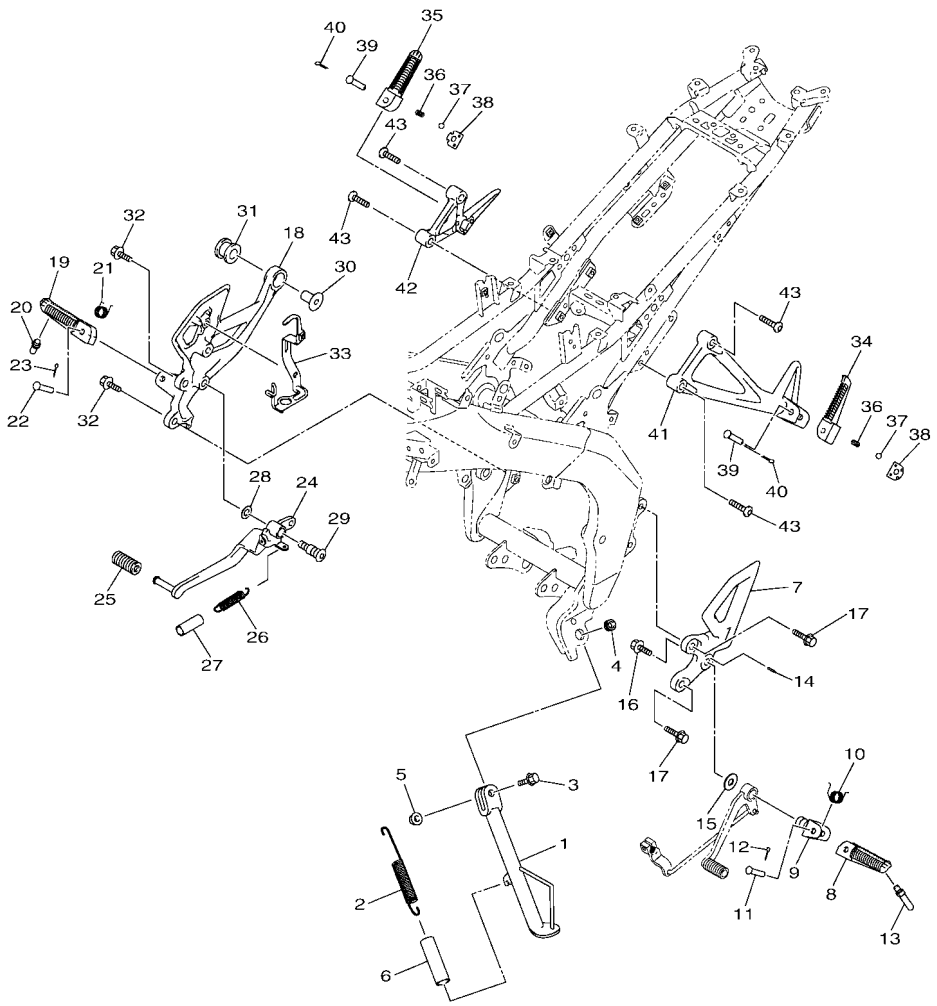

B7D1431-U320

FIG. 32 STAND & FOOTREST

REF. NO.	PART NO.	DESCRIPTION	BHM3					REMARKS
1	B8D–F7311–00	STAND, SIDE	1					
2	90506–28800	SPRING, TENSION	1					
3	90105–10888	BOLT, FLANGE	1					
4	90387–10003	COLLAR	1					
5	95602–10200	NUT, S/L FLANGE	1					
6	90445–21848	HOSE (L70)	1					
7	B7D–F7442–00	BRACKET 2	1					
8	20P–F7451–00	FOOTREST	1					
9	2PK–F7411–00	FOOTREST 1	1					
10	90508–183B9	SPRING, TORSION	1					
11	90240–08144	PIN, CLEVIS	1					
12	91401–25015	PIN, COTTER	1					
13	2C0–27435–00	BOLT	1					UR Either can use
	20P–F7435–00	BOLT	1					UR Either can use
14	90249–02002	PIN	1					
15	90201–10066	WASHER, PLATE	1					
16	90110–10012	BOLT, HEXAGON SOCKET HEAD	1					
17	90110–08803	BOLT, HEXAGON SOCKET HEAD	2					
18	B7D–F7443–00	BRACKET 3	1					
19	20P–F7461–00	FOOTREST	1					
20	20P–F7435–00	BOLT	1					
21	90508–184B0	SPRING, TORSION	1					
22	90240–08145	PIN, CLEVIS	1					
23	91401–25015	PIN, COTTER	1					
24	B9D–F7211–00	PEDAL, BRAKE	1					
25	1EG–E8113–10	COVER, SHIFT PEDAL	1					
26	90506–20193	SPRING, TENSION	1					

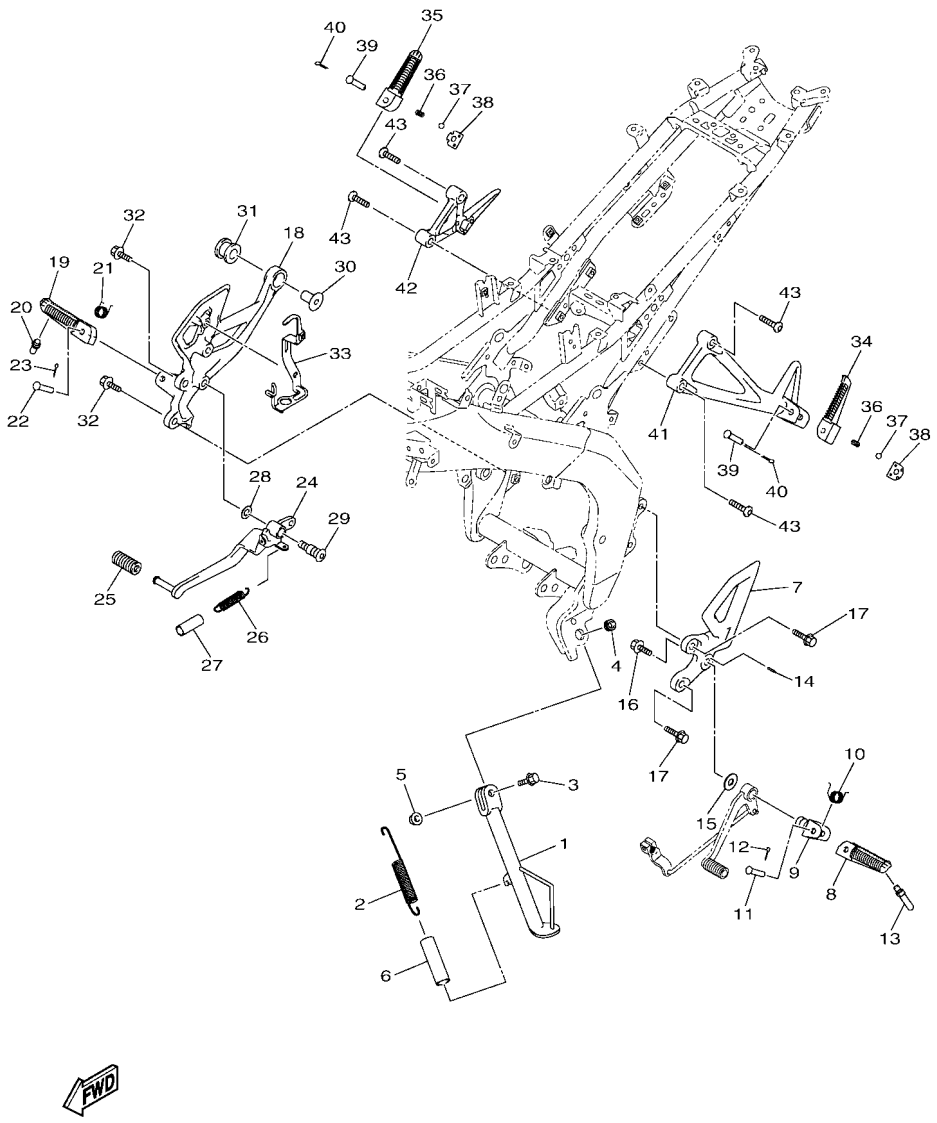

FIG. 32 STAND & FOOTREST

REF. NO.	PART NO.	DESCRIPTION	BHM3					REMARKS
27	90445–16807	HOSE	1					
28	90201–10021	WASHER, PLATE	1					
29	BS8–F7261–00	SHAFT	1					
30	90387–08842	COLLAR	1					
31	BK7–E4747–00	DAMPER, MUFFLER	1					
32	90110–08803	BOLT, HEXAGON SOCKET HEAD	2					
33	B7D–F144G–10	STAY, STOP SWITCH	1					
34	1WD–F7431–01	FOOTREST, REAR 1	1					
35	1WD–F7441–01	FOOTREST, REAR 2	1					
36	90501–12743	SPRING, COMPRESSION	2					
37	93501–04830	BALL	2					
38	B7D–F7437–00	WASHER, SPECIAL	2					
39	90240–08145	PIN, CLEVIS	2					
40	91401–25015	PIN, COTTER	2					
41	B7D–F741L–00	BRACKET 4	1					
42	B7D–F742L–00	BRACKET 5	1					
43	90110–08071	BOLT, HEXAGON SOCKET HEAD	4					

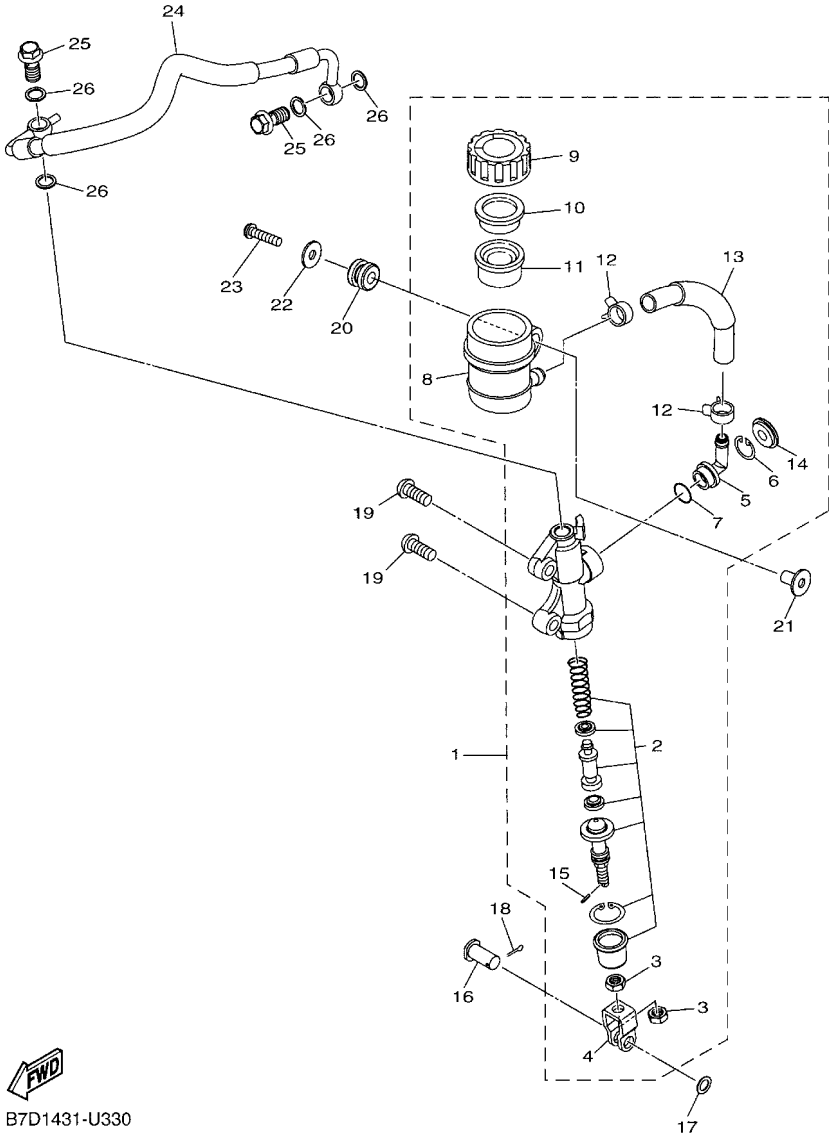

FIG. 33 REAR MASTER CYLINDER

REF. NO.	PART NO.	DESCRIPTION	BHM3					REMARKS
1	B7D–F580E–00	REAR MASTER CYLINDER ASSY	1					
2	B97–F5808–00	.CYLINDER KIT, MASTER	1					
3	95302–08700	.NUT, HEXAGON	2					
4	50C–F7222–00	.JOINT	1					
5	50C–F582A–50	.JOINT	1					
6	50C–F5866–00	.CIRCLIP	1					
7	93210–15620	.O-RING	1					
8	50C–F5894–11	.TANK, RESERVOIR	1					
9	BK6–F5852–00	.CAP, RESERVOIR	1					
10	50C–F5855–00	.BUSH,DIAPHRAGM	1					
11	2VN–F5854–00	.DIAPHRAGM, RESERVOIR	1					
12	90467–12085	.CLIP	2					
13	B7D–F5895–00	.HOSE, RESERVOIR	1					
14	50C–F589A–00	.COVER, DUST	1					
15	5BU–27234–00	.PIN, BRAKE ROD	1					
16	90240–08005	PIN, CLEVIS	1					
17	90201–08066	WASHER, PLATE	1					
18	91401–20012	PIN, COTTER	1					
19	92017–08025	BOLT, BUTTON HEAD	2					
20	50C–F4742–00	GROMMET	1					
21	50C–F6259–00	COLLAR	1					
22	90201–06828	WASHER, PLATE	1					
23	98507–06025	SCREW, PAN HEAD	1					
24	B8D–F5873–00	HOSE, BRAKE 2	1					
25	90401–10812	BOLT, UNION	2					
26	90201–10118	WASHER, PLATE	4					

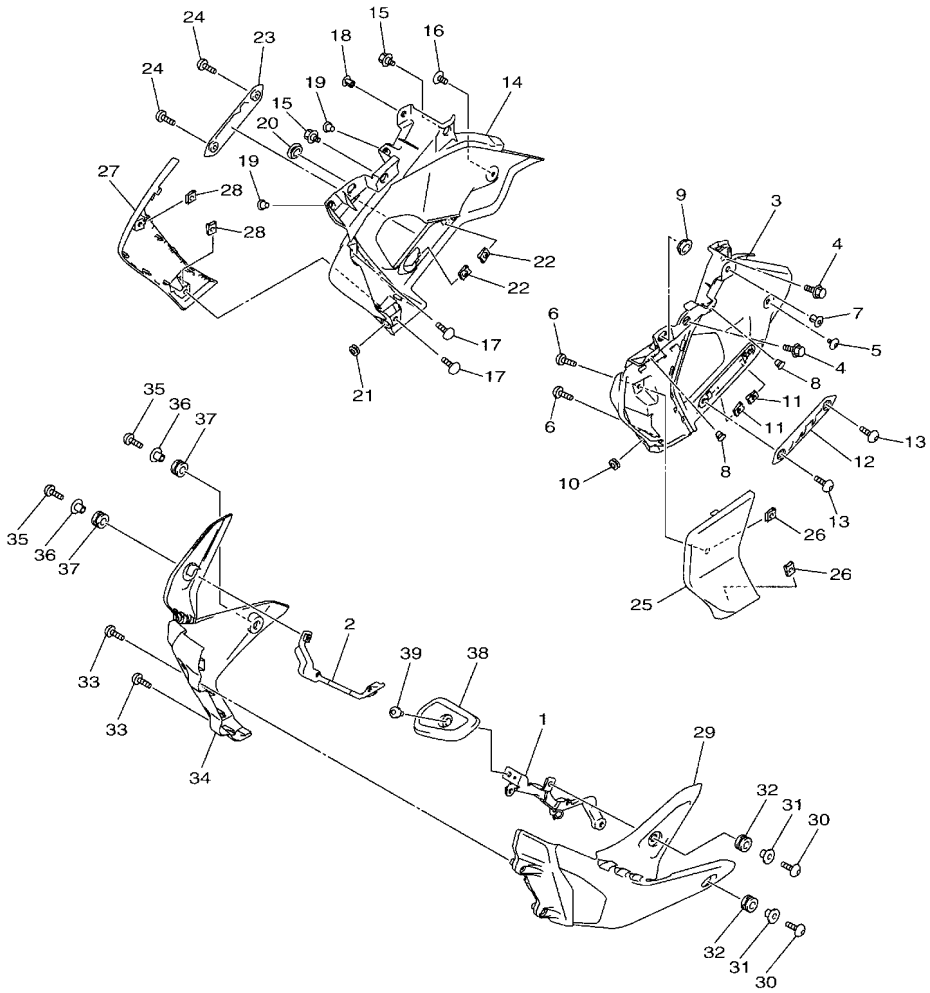

B7D1431-U340

FIG. 34 LEG SHIELD

REF. NO.	PART NO.	DESCRIPTION	BHM3					REMARKS
1	B7D–F8283–00	BRACKET, POUCH	1					
2	B7D–F8284–00	BRACKET, UNDER	1					
3	B7D–F137U–00	GUIDE, AIR 1	1					
4	90109–06202	BOLT	2					
5	90110–06102	BOLT, HEXAGON SOCKET HEAD	1					
6	97707–50012	SCREW, TRUSS HEAD TAPPING	2					
7	90269–06816	RIVET	1					
8	90338–06018	PLUG	2					
9	90480–01559	GROMMET	1					
10	90480–10623	GROMMET	1					
11	90183–05807	NUT, SPRING	2					
12	B7D–F8336–00	PLATE	1					
13	90160–05810	SCREW, ROUND TAPPING	2					
14	B7D–F137V–00	GUIDE, AIR 2	1					
15	90109–06202	BOLT	2					
16	90110–06102	BOLT, HEXAGON SOCKET HEAD	1					
17	97707–50012	SCREW, TRUSS HEAD TAPPING	2					
18	90269–06816	RIVET	1					
19	90338–06018	PLUG	2					
20	90480–01559	GROMMET	1					
21	90480–10623	GROMMET	1					
22	90183–05807	NUT, SPRING	2					
23	B7D–F8336–00	PLATE	1					
24	90160–05810	SCREW, ROUND TAPPING	2					
25	B8D–F835U–00–P5	PANEL 1	1					UR FOR DPBMC
	B8D–F835U–00–3E	PANEL 1	1					UR FOR PGD
	B8D–F835U–00–P4	PANEL 1	1					UR FOR MDNM8

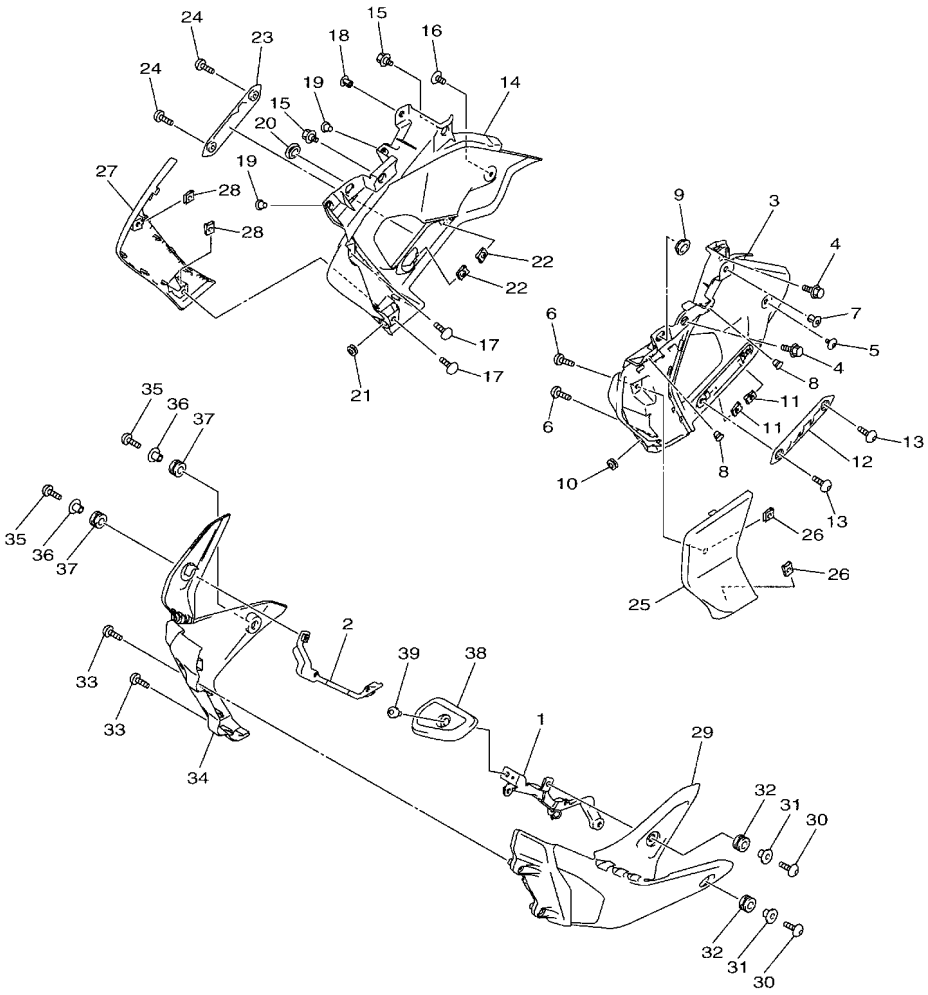

B7D1431-U340

FIG. 34 LEG SHIELD

REF. NO.	PART NO.	DESCRIPTION	BHM3					REMARKS
26	90183–05807	NUT, SPRING	2					
27	B8D–F835V–00–P5	PANEL 2	1					UR FOR DPBMC
	B8D–F835V–00–3E	PANEL 2	1					UR FOR PGD
	B8D–F835V–00–P4	PANEL 2	1					UR FOR MDNM8
28	90183–05807	NUT, SPRING	2					
29	B7D–F8385–00	COVER, UNDER	1					
30	90111–06117	BOLT,HEX. SOCKET BUTTON	2					
31	90387–06899	COLLAR	2					
32	90480–12808	GROMMET	2					
33	97707–50016	SCREW, TRUSS HEAD TAPPING	2					
34	B7D–F8395–00	COVER, UNDER 2	1					
35	90111–06117	BOLT,HEX. SOCKET BUTTON	2					
36	90387–06899	COLLAR	2					
37	90480–12808	GROMMET	2					
38	B9D–F8365–00	COVER	1					
39	90109–068B3	BOLT	1					

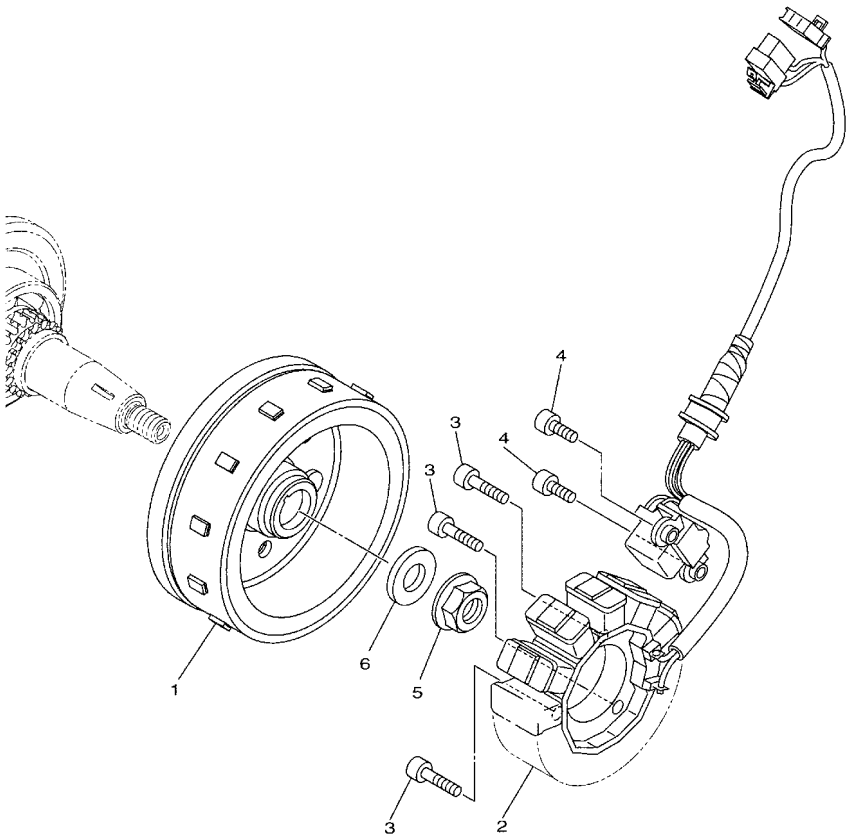

FWD

B7D1431-U350

FIG. 35 GENERATOR

REF. NO.	PART NO.	DESCRIPTION	BHM3					REMARKS
1	2PV–H1450–01	ROTOR ASSY	1					
2	BK6–H1410–03	STATOR ASSY	1					
3	91332–06025	BOLT	3					
4	91332–06016	BOLT	2					
5	95702–12500	NUT, FLANGE	1					
6	90201–12019	WASHER, PLATE	1					

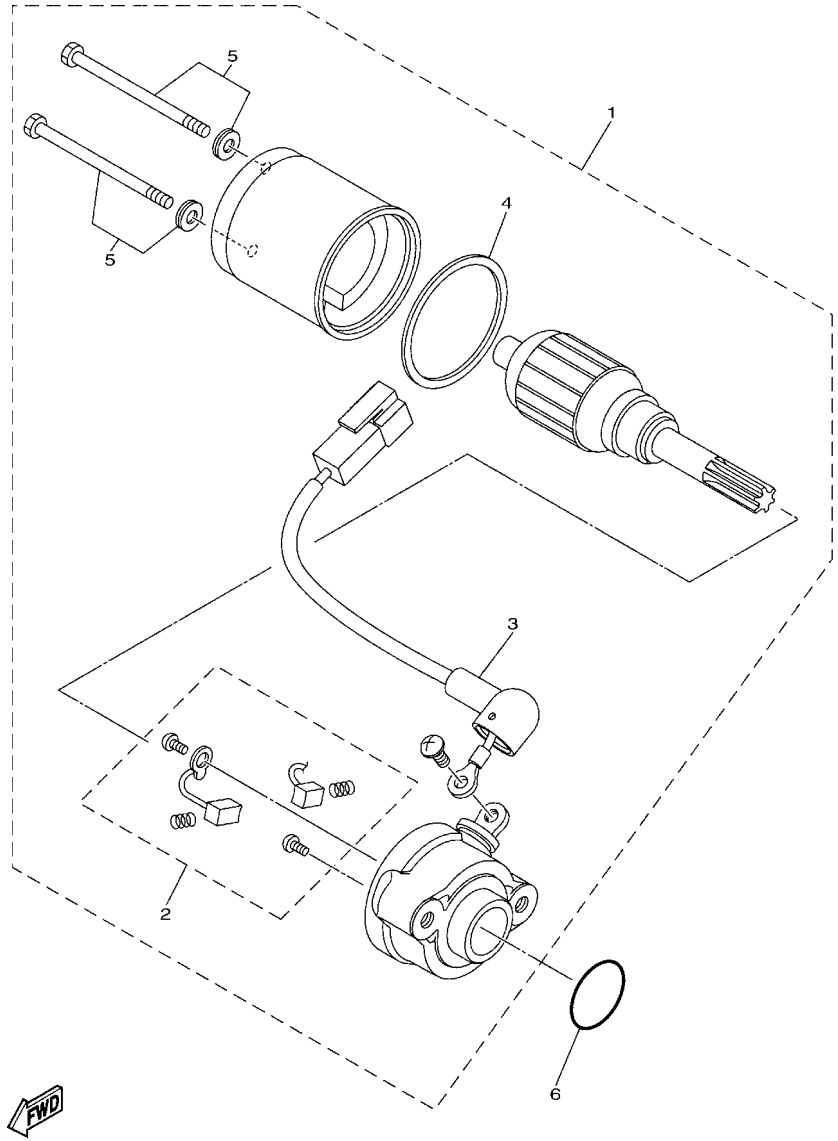

B7D1431-U360

FIG. 36 STARTING MOTOR

REF. NO.	PART NO.	DESCRIPTION	BHM3					REMARKS
1	BK6–H1800–00	STARTING MOTOR ASSY	1					
2	2PH–H1801–10	.BRUSH SET	1					
3	1FD–H183G–00	.CORD COMP.	1					
4	5D9–H1861–00	.GASKET	1					
5	5D9–H1828–00	.SCREW SET	2					
6	93210–26805	O-RING	1					

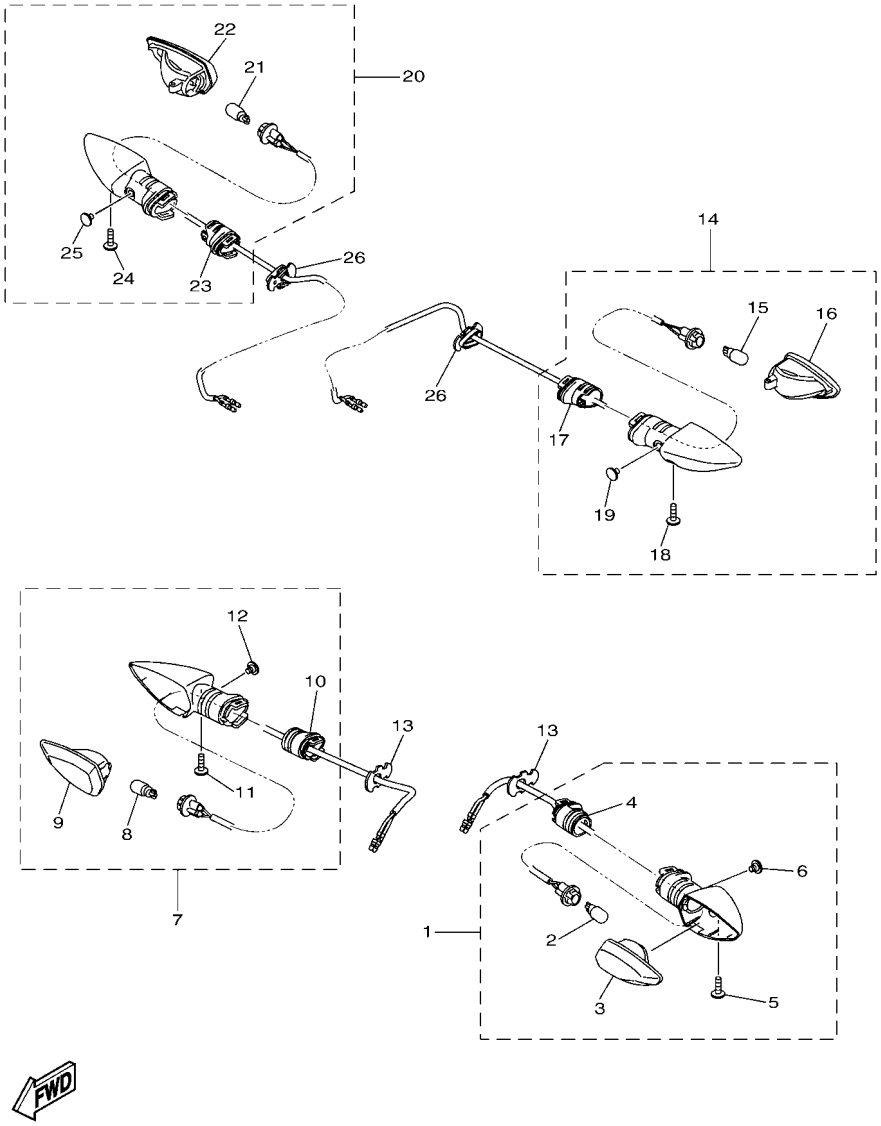

BFL1200-V370

FIG. 37 FLASHER LIGHT

REF. NO.	PART NO.	DESCRIPTION	BHM3					REMARKS
1	B48–H3310–00	FRONT FLASHER LIGHT ASSY 1	1					
2	2CB–H3311–00	.BULB, FLASHER (12V-10W)	1					
3	2CB–H333A–00	.LENS COMP 1	1					
4	1PA–H3328–00	.STAY, FLASHER 2	1					
5	1PA–H3333–00	.SCREW, LENS FITTING	1					
6	1PA–H3358–00	.SCREW, SPECIAL	1					
7	B48–H3320–00	FRONT FLASHER LIGHT ASSY 2	1					
8	2CB–H3311–00	.BULB, FLASHER (12V-10W)	1					
9	2CB–H334A–00	.LENS COMP 2	1					
10	1PA–H3328–00	.STAY, FLASHER 2	1					
11	1PA–H3333–00	.SCREW, LENS FITTING	1					
12	1PA–H3358–00	.SCREW, SPECIAL	1					
13	2PV–H3318–00	STAY, FLASHER 1	2					
14	B7D–H3330–00	REAR FLASHER LIGHT ASSY 1	1					
15	2CB–H3311–00	.BULB, FLASHER (12V-10W)	1					
16	2CB–H334A–00	.LENS COMP 2	1					
17	1PA–H3328–00	.STAY, FLASHER 2	1					
18	1PA–H3333–00	.SCREW, LENS FITTING	1					
19	1PA–H3358–00	.SCREW, SPECIAL	1					
20	B7D–H3340–00	REAR FLASHER LIGHT ASSY 2	1					
21	2CB–H3311–00	.BULB, FLASHER (12V-10W)	1					
22	2CB–H333A–00	.LENS COMP 1	1					
23	1PA–H3328–00	.STAY, FLASHER 2	1					
24	1PA–H3333–00	.SCREW, LENS FITTING	1					
25	1PA–H3358–00	.SCREW, SPECIAL	1					
26	3C1–H3318–00	STAY, FLASHER 1	2					

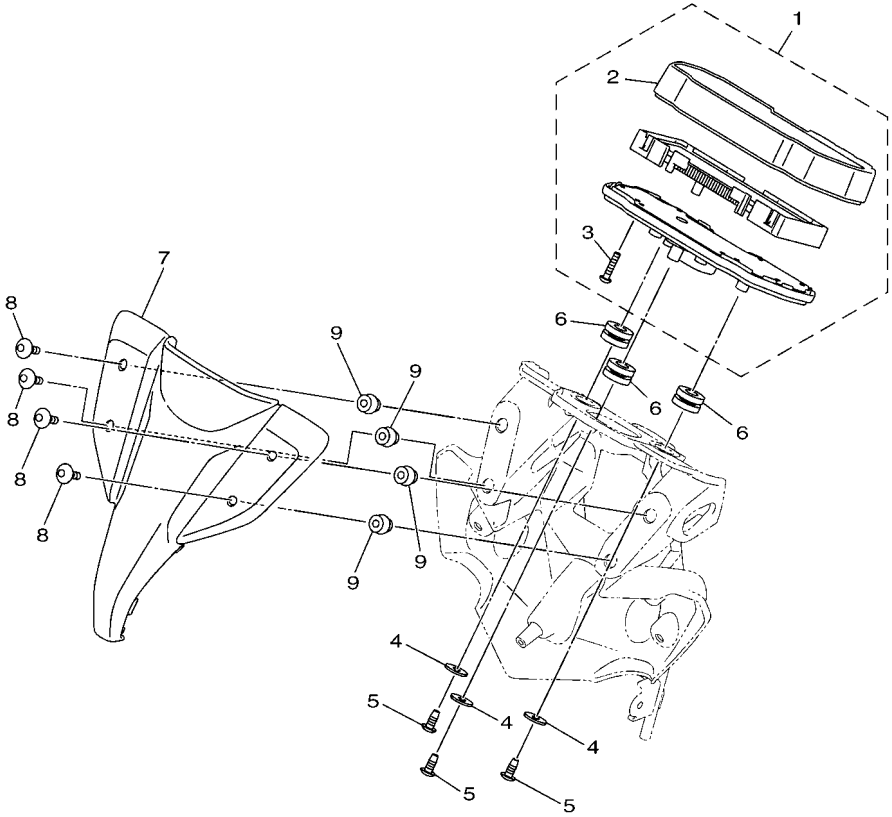

BFL1200-V380

FIG. 38 METER

REF. NO.	PART NO.	DESCRIPTION	BHM3					REMARKS
1	B8D–H3500–03	METER ASSY	1					
2	B7D–H3571–01	.CASE, SPEEDOMETER UPPER	1					
3	97702–30016	.SCREW,TAPPING	9					
4	90201–05036	WASHER, PLATE	3					
5	97707–50014	SCREW, TRUSS HEAD TAPPING	3					
6	90480–14004	GROMMET	3					
7	B7D–F61AA–00	VISOR	1					
8	90111–05809	BOLT,HEX. SOCKET BUTTON	4					
9	90179–05849	NUT	4					

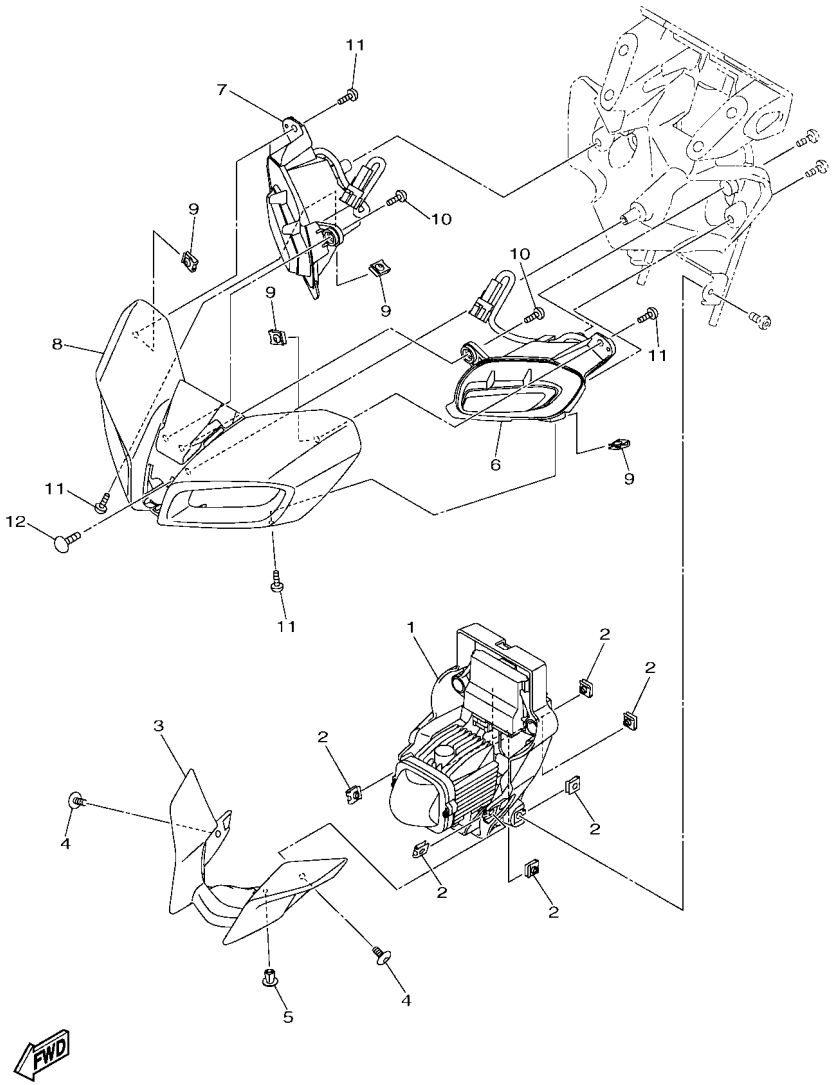

B7D1431-U390

FIG. 39 HEADLIGHT

REF. NO.	PART NO.	DESCRIPTION	BHM3					REMARKS
1	B7D–H4300–01	HEADLIGHT ASSY	1					
2	90183–050A7	NUT, SPRING	6					
3	B7D–F3122–00	COVER, OUTER 1	1					
4	90111–05003	BOLT,HEX. SOCKET BUTTON	2					
5	90269–06816	RIVET	1					
6	B7D–H4301–00	PILOT LIGHT ASSY 1	1					
7	B7D–H4302–00	PILOT LIGHT ASSY 2	1					
8	B8D–H4144–00–P1	COVER, HEADLIGHT	1					UR FOR DPBMC
	B8D–H4144–00–3E	COVER, HEADLIGHT	1					UR FOR PGD
	B8D–H4144–00–P2	COVER, HEADLIGHT	1					UR FOR MDNM8
9	90183–05807	NUT, SPRING	4					
10	97707–50012	SCREW, TRUSS HEAD TAPPING	2					
11	97707–50012	SCREW, TRUSS HEAD TAPPING	4					
12	97702–50016	SCREW,TAPPING	1					

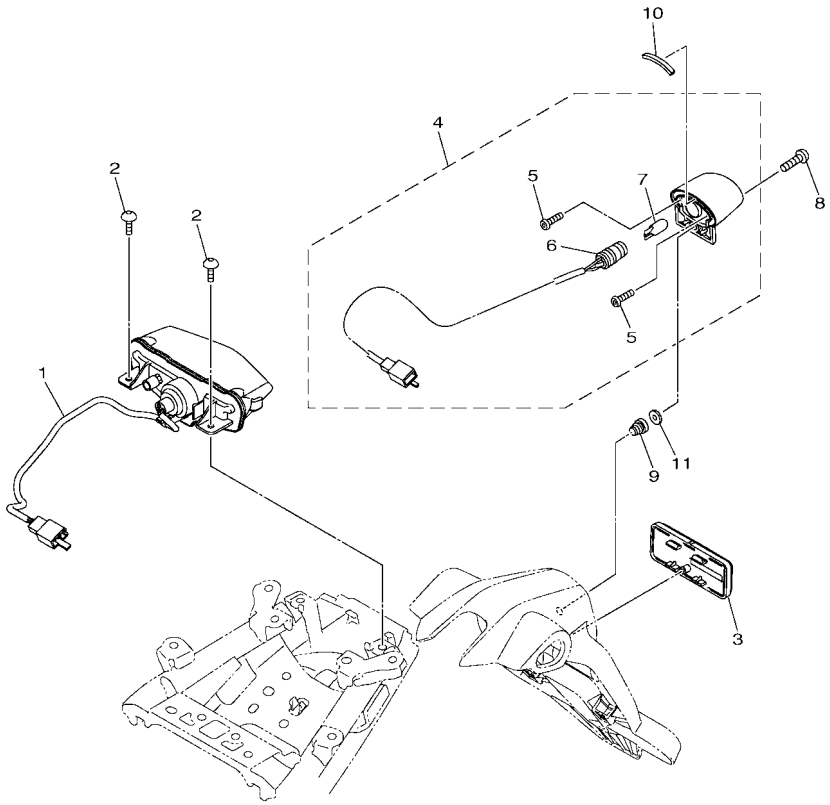

BHM2440-W400

FIG. 40 TAILLIGHT

REF. NO.	PART NO.	DESCRIPTION	BHM3					REMARKS
1	B7D–H4710–00	TAILLIGHT UNIT ASSY	1					
2	97702–50016	SCREW,TAPPING	2					
3	BE1–H5130–00	REAR REFLECTOR ASSY	1					
4	BHM–H4740–00	LICENSE LIGHT ASSY	1					
5	1CK–H4726–00	.SCREW	2					
6	1WD–H4547–00	.CORD, LICENSE LIGHT	1					
7	1WD–H4744–00	.BULB (12V-5W)	1					
8	98907–04020	SCREW, BIND	1					
9	90179–04003	NUT	1					
10	90520–08820	DAMPER, PLATE	1					
11	90201–04817	WASHER, PLATE	1					

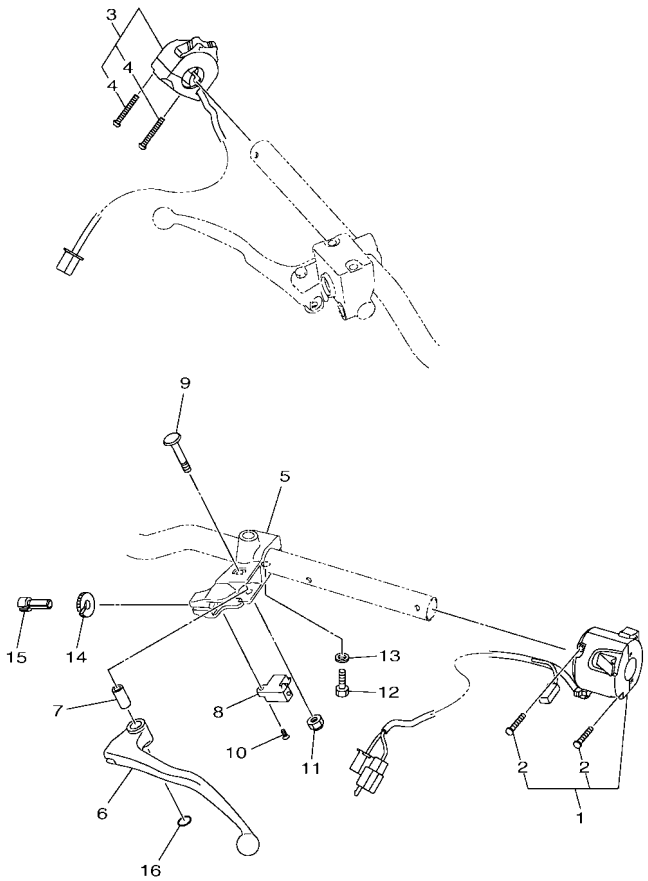

BHM3440-X410

FIG. 41 HANDLE SWITCH & LEVER

REF. NO.	PART NO.	DESCRIPTION	BHM3					REMARKS
1	B8D–H3972–00	SWITCH, HANDLE 4	1					
2	98507–04025	.SCREW, PAN HEAD	2					
3	B8D–H3976–00	SWITCH, HANDLE 1	1					
4	98507–04025	.SCREW, PAN HEAD	2					
5	3KA–H2911–00	HOLDER, LEVER 1	1					
6	2TP–H3912–00	LEVER 1	1					
7	3KA–H3913–00	COLLAR, LEVER 1	1					
8	5BP–H2917–00	SWITCH	1					
9	3KA–H3945–00	BOLT, LEVER	1					
10	90151–03005	SCREW, COUNTERSUNK	1					
11	95602–06100	NUT, SELF-LOCKING	1					
12	97007–06025	BOLT	1					
13	92907–06600	WASHER, PLATE	1					
14	90179–08148	NUT	1					
15	90123–08046	BOLT	1					
16	93210–108H5	O-RING	1					

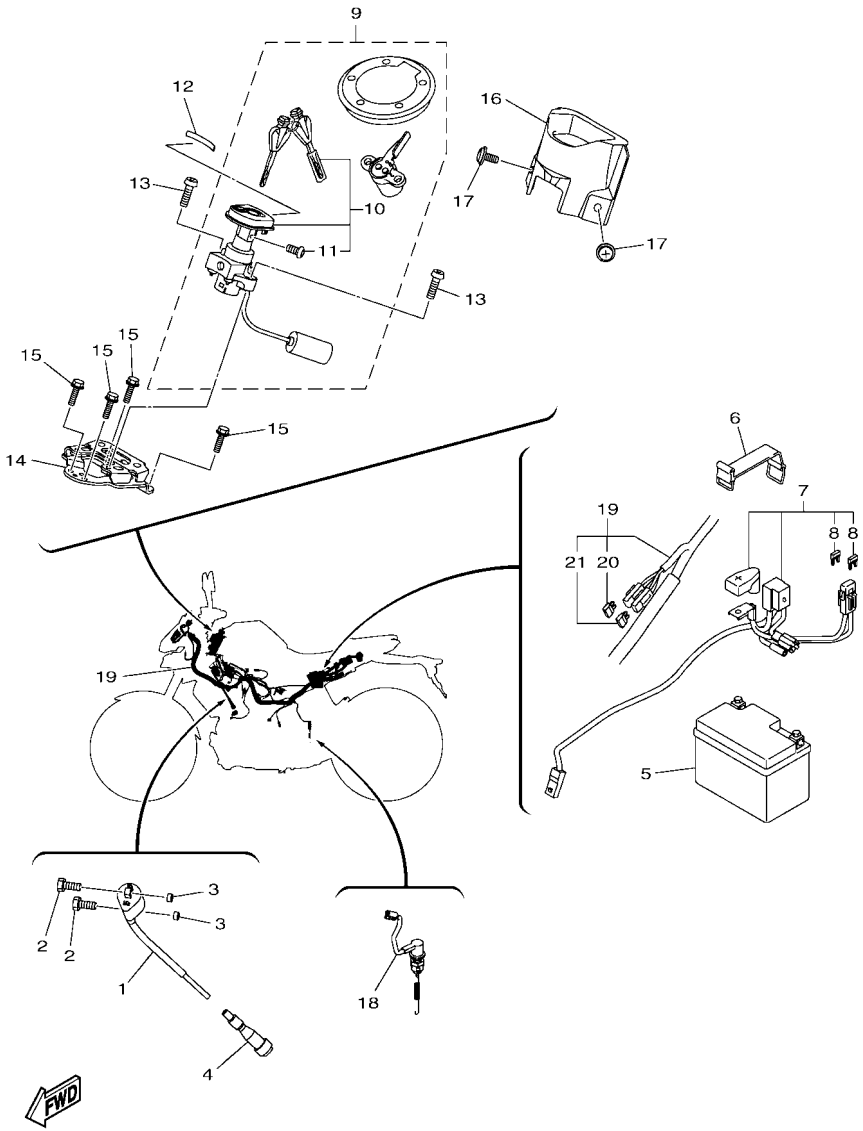

BHM2440-W420

FIG. 42 ELECTRICAL 1

REF. NO.	PART NO.	DESCRIPTION	BHM3					REMARKS
1	B0A–H2310–00	IGNITION COIL ASSY	1					
2	97080–06020	BOLT	2					
3	90387–06M30	COLLAR	2					
4	BK6–H2370–00	PLUG CAP ASSY	1					
5	14D–H2100–00	BATTERY ASSY (YUASA YTZ4V)	1					
6	B8D–H2131–00	BAND, BATTERY	1					
7	B8D–H2150–01	FUSE HOLDER ASSY	1					
8	B65–H2151–10	.FUSE (15A)	2					
9	B7D–XH250–00	MAIN SW. STRG. LOCK SUB ASSY	1					
10	B7D–H252E–00	.MAIN SWITCH COMP.	1					
11	97602–05208	..SCREW, PAN HEAD WITH WASHER	1					
12	90520–01804	DAMPER, PLATE	1					
13	90111–06177	BOLT,HEX. SOCKET BUTTON	2					
14	B8D–H252C–00	STAY, MAIN SWITCH	1					
15	90105–06090	BOLT, FLANGE	4					
16	BG7–H2568–00	COVER, MAIN SWITCH	1					
17	90159–06860	SCREW, WITH WASHER	2					
18	B2S–H2530–10	STOP SWITCH ASSY	1					
19	B8D–H2590–10	WIRE HARNESS ASSY	1					
20	B65–H2151–80	.FUSE (2A)	2					
21	B65–H2151–00	.FUSE (7.5A)	2					

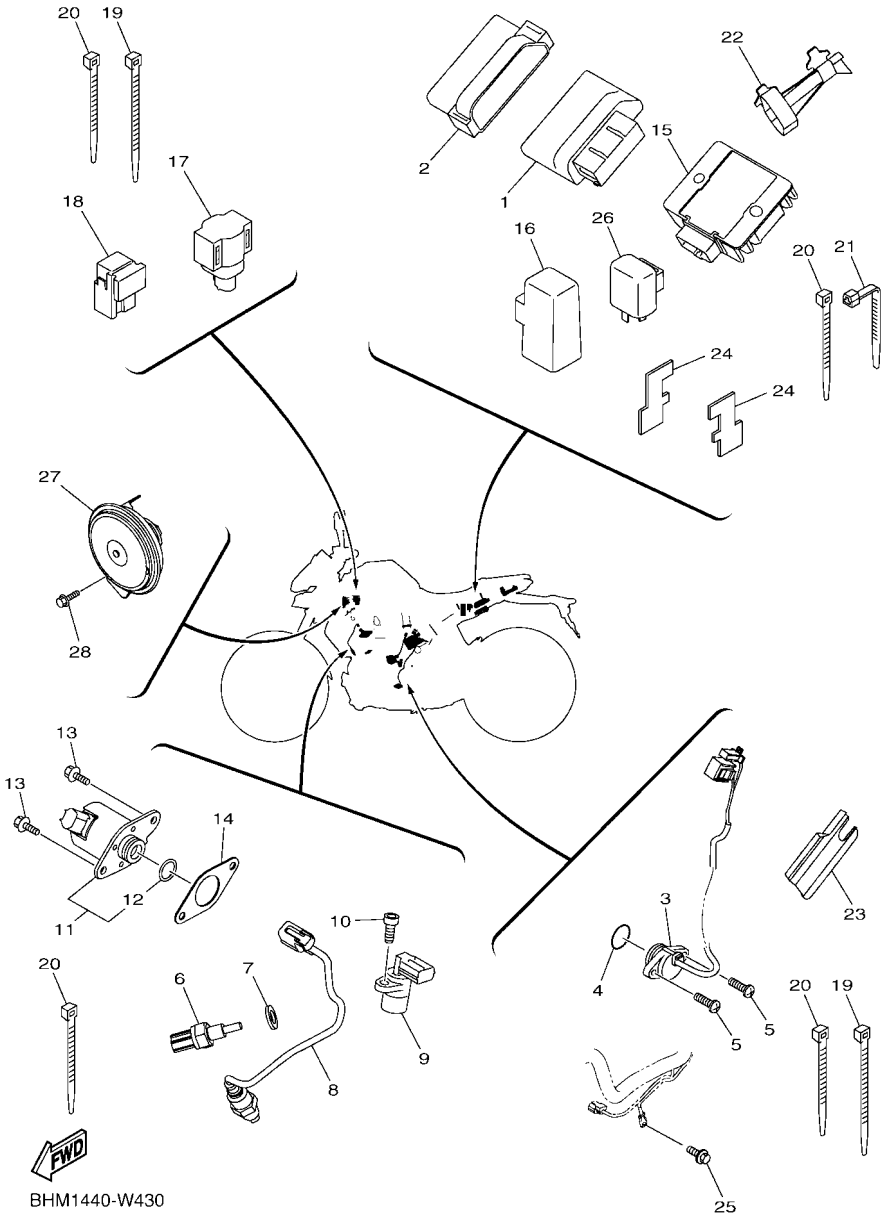

BHM1440-W430

FIG. 43 ELECTRICAL 2

REF. NO.	PART NO.	DESCRIPTION	BHM3					REMARKS
1	B8D–H591A–10	ENGINE CONTROL UNIT ASSY	1					
2	B8D–H5546–10	BAND	1					
3	BK6–H2540–01	NEUTRAL SWITCH ASSY	1					
4	93210–21801	O-RING	1					
5	98502–05016	SCREW,PAN HEAD	2					
6	52B–H3591–00	THERMO UNIT	1					
7	90430–10806	GASKET	1					
8	2DP–H592A–20	SENSOR, OXYGEN	1					
9	B48–H3755–01	SENSOR, SPEED	1					
10	91332–06014	BOLT	1					
11	BK6–H6110–10	SOLENOID	1					
12	BK6–H1847–00	.O-RING	1					
13	95D32–06016	BOLT, FLANGE DEEP RECESS	2					
14	BK6–H1861–00	GASKET	1					
15	BK8–H1960–00	RECTIFIER & REGULATOR ASSY	1					
16	B7D–H1940–00	STARTER RELAY ASSY	1					
17	1PA–H2576–00	SENSOR, LEAN ANGLE	1					
18	BK6–H1950–00	RELAY ASSY	1					
19	90464–50800	CLAMP	6					
20	90464–36800	CLAMP	7					
21	90464–13073	CLAMP	2					(125.0x7.0)
22	B8D–H1614–01	PROTECTOR	1					
23	B8D–H2589–00	PROTECTER, WIRE HARNESS	1					
24	B8D–F117G–00	PROTECTOR	2					
25	95022–06012	BOLT, FLANGE	1					
26	1PA–H3350–00	FLASHER RELAY ASSY	1					
27	B7D–H3371–00	HORN	1					

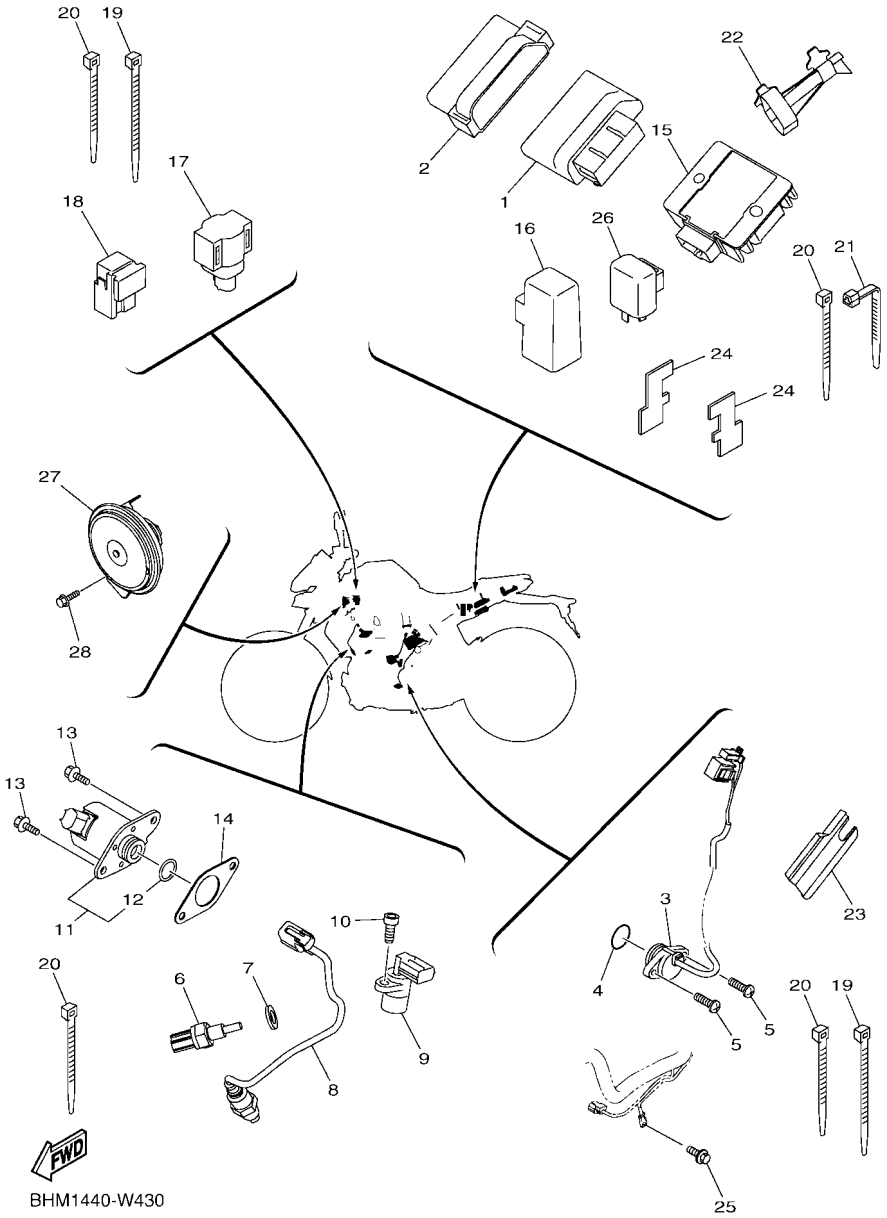

BHM1440-W430

FIG. 43 ELECTRICAL 2

REF. NO.	PART NO.	DESCRIPTION	BHM3					REMARKS
28	95D32–06012	BOLT, FLANGE DEEP RECESS	1					

PART NO.	REF. NO.
52S–12439–00	6 – 2
31A–23125–31	22 – 9
	22 – 25
5XT–25802–50	29 – 5
3JD–25803–50	29 – 6
5XT–25827–00	29 – 15
36Y–2589H–00	31 – 7
3SP–25919–51	29 – 9
3SP–25924–51	29 – 13
3SP–25926–51	29 – 12
5BU–27234–00	33 – 15
2C0–27435–00	32 – 13
B3M–E1102–00	1 – 1
B63–E111F–00	4 – 9
2DP–E1133–10	1 – 2
B3M–E1165–00	1 – 8
BK7–E1166–00	8 – 25
2DP–E1169–00	1 – 9
2DP–E1181–00	1 – 20
BK7–E1185–00	5 – 4
BK6–E1191–00	1 – 7
B3F–E1193–00	1 – 15
2DP–E1311–10	1 – 24
BK6–E132G–00	1 – 13
BK6–E1351–00	1 – 25
BDJ–E1400–00	2 – 1
BDJ–E1412–00	2 – 2
BDJ–E1422–00	2 – 5
BK7–E1454–00	2 – 21
21C–E1496–20	2 – 16
BK6–E1531–10	2 – 22
BK6–E1536–00	2 – 15
BK7–E1549–00	2 – 7
BK6–E1557–00	3 – 11
BK6–E1603–00	2 – 14
BK6–E1631–00	2 – 11
2DP–E1633–00	2 – 12
BK6–E1651–00	2 – 4
BK6–E1681–00	2 – 6
BK6–E2111–00	3 – 1
B63–E2113–00	3 – 4
2DP–E2117–00	3 – 6
5TL–E2118–00	3 – 5
54P–E2119–00	3 – 3
B3M–E2121–00	3 – 2
50C–E2126–00	3 – 7
BK6–E2150–00	3 – 8
B65–E2156–00	4 – 1

PART NO.	REF. NO.
B63–E2157–00	4 – 8
B5V–E2160–01	3 – 14
BK6–E2166–00	3 – 10
B3M–E2170–00	4 – 3
2PV–E2210–01	4 – 16
BK6–E2213–00	4 – 18
5MX–E2222–00	4 – 17
BK6–E2226–00	3 – 12
54P–E2228–00	4 – 14
B65–E2231–00	4 – 12
BK6–E2241–00	4 – 13
BK6–E2256–00	4 – 15
BK7–E2279–00	3 – 13
B3M–E2280–00	4 – 6
B6H–E2288–01	4 – 7
BK6–E2405–00	6 – 9
BK6–E2410–00	6 – 1
BK7–E2422–00	5 – 1
2DP–E2428–00	5 – 3
BK7–E2435–00	5 – 9
BK7–E2443–00	5 – 12
BK7–E2450–00	5 – 5
BK6–E2460–00	6 – 7
BK6–E2461–00	6 – 8
BK7–E2467–00	6 – 18
BK6–E2481–00	6 – 19
BK6–E2482–00	6 – 21
BK6–E2483–00	6 – 4
5P0–E2590–00	6 – 12
BK7–E2615–00	5 – 8
5YP–E2671–00	6 – 11
5YP–E2675–00	6 – 10
BK7–E2842–00	5 – 6
BK6–E3300–00	7 – 1
2PV–E3324–00	7 – 8
3C1–E3327–00	7 – 13
38B–E3411–00	7 – 4
38B–E3440–01	7 – 7
2PK–E3447–00	7 – 9
BK7–E3516–00	5 – 10
BDJ–E3585–00	8 – 1
BK6–E3750–00	8 – 12
BDJ–E3761–00	8 – 5
BDJ–E3767–00	8 – 11
BDJ–E3770–00	8 – 4
B7D–E3907–00	23 – 17
54P–E3915–00	23 – 18
B7J–E3938–10	8 – 8

PART NO.	REF. NO.
BDJ–E3971–00	23 – 23
1ST–E4137–00	8 – 9
2SU–E4147–00	8 – 6
BK6–E4199–00	8 – 2
2SU–E41A1–00	8 – 7
BK6–E4411–01	8 – 14
BDJ–E4412–00	8 – 15
BK6–E441J–00	8 – 22
5TL–E443E–00	8 – 20
B5G–E4450–00	8 – 16
BK6–E4452–00	8 – 18
BK6–E4453–00	8 – 17
BK7–E4613–00	9 – 5
B9B–E4703–10	9 – 1
BK6–E4718–00	9 – 2
BK7–E4747–00	32 – 31
BK6–E4799–00	9 – 3
2PV–E5113–00	11 – 9
BK6–E5150–00	10 – 1
1S7–E5351–00	7 – 3
BK7–E5362–00	11 – 17
BK6–E5411–00	11 – 1
BK6–E5418–00	11 – 10
BK6–E5421–00	11 – 12
BK6–E5441–00	4 – 19
BK6–E5451–00	11 – 2
BK6–E5461–00	11 – 13
B48–E5514–00	12 – 1
BK7–E5521–00	12 – 2
2PV–E5524–10	12 – 3
2TP–E5580–00	12 – 6
3C1–E6111–00	13 – 1
54B–E6144–00	13 – 20
BDJ–E6150–00	13 – 5
2ND–E6154–00	13 – 6
38B–E6193–00	13 – 2
2ND–E6321–00	13 – 8
BK6–E6321–00	13 – 10
BK6–E6324–00	13 – 12
BK6–E6325–00	13 – 11
BK6–E6331–00	13 – 9
BK6–E6333–00	13 – 14
BK6–E6337–00	13 – 17
3C1–E6344–00	13 – 21
BK6–E6345–00	13 – 25
BK6–E6351–00	13 – 13
BK6–E6352–00	13 – 16
3C1–E6356–10	13 – 19

PART NO.	REF. NO.
1PA–E6357–00	13 – 26
3C1–E6358–00	13 – 18
BK6–E6371–00	13 – 7
BK7–E6380–00	13 – 24
BK6–E6774–00	13 – 15
3C1–E7121–00	14 – 7
5D7–E7131–00	14 – 5
BK6–E7151–00	14 – 2
BK6–E7161–00	14 – 6
3C1–E7211–00	14 – 13
BK6–E7221–00	14 – 21
BK6–E7231–00	14 – 19
BK6–E7241–00	14 – 18
BK6–E7251–00	14 – 15
5D7–E7261–00	14 – 20
BK6–E7411–00	14 – 1
BK6–E7421–00	14 – 12
1S7–E7456–00	14 – 29
3C1–E7471–00	14 – 10
38B–E8101–00	16 – 4
B9D–E8110–00	16 – 9
BK7–E8112–00	16 – 14
20P–E8113–00	16 – 10
1EG–E8113–10	32 – 25
B9D–E8115–00	16 – 11
BK7–E8140–00	16 – 1
BK6–E8337–00	16 – 3
2ND–E8511–00	15 – 4
2ND–E8512–00	15 – 5
2ND–E8513–00	15 – 6
1PA–E8531–00	15 – 7
BK6–E8540–00	15 – 1
5TP–E8542–00	15 – 2
B8D–F1110–02	17 – 1
B8D–F111D–00	17 – 7
B8D–F117G–00	43 – 24
3C1–F1338–00	6 – 23
BK7–F135F–00	20 – 2
B7D–F137U–00	34 – 3
B7D–F137V–00	34 – 14
B8D–F137W–00–P2	24 – 30
B8D–F137W–00–P3	24 – 30
B8D–F137W–00–P5	24 – 30
B8D–F137X–00–P2	24 – 32
B8D–F137X–00–P3	24 – 32
B8D–F137X–00–P5	24 – 32
B8D–F1391–00	18 – 33
B7D–F144G–10	32 – 33

PART NO.	REF. NO.
BG7–F1511–00–3E	18 – 1
BG7–F1511–00–P5	18 – 1
BG7–F1511–00–P6	18 – 1
B17–F1568–00	24 – 42
B7D–F1611–00	18 – 10
B7D–F1629–00	18 – 20
B7D–F163A–01	18 – 26
B8D–F163E–00	18 – 21
B8D–F1640–00	18 – 22
B2S–F1641–01	18 – 34
BK7–F1650–01	20 – 21
B8D–F1668–01	20 – 26
B8D–F1682–00	18 – 15
B7D–F1711–00	19 – 1
1PA–F1717–00	23 – 13
B7D–F171E–00	19 – 23
B7D–F171X–00	19 – 27
B7D–F1721–00	19 – 6
B8D–F1731–00–3E	19 – 17
B8D–F1731–00–P5	19 – 17
B8D–F173E–20	19 – 31
B8D–F173E–30	19 – 31
B8D–F173E–40	19 – 31
B8D–F173F–20	19 – 32
B8D–F173F–30	19 – 32
B8D–F173F–40	19 – 32
B8D–F1741–00–3E	19 – 20
B8D–F1741–00–P5	19 – 20
BK7–F1817–00	19 – 13
BK6–F1871–00	19 – 11
1S7–F1875–01	19 – 12
BK6–F2110–00	20 – 1
2PK–F2128–01	20 – 5
BK6–F2141–00	20 – 6
BK7–F2151–00	20 – 8
1CK–F217A–00	20 – 11
2PK–F217F–00	20 – 15
BK6–F2184–00	20 – 4
B7D–F2210–00	20 – 25
BK6–F2311–00	20 – 18
BK6–F2327–00	17 – 5
BK6–F247A–01	19 – 14
B7D–F3100–00	22 – 1
B7D–F3102–00	22 – 2
B7D–F3103–00	22 – 19
B7D–F3110–00	22 – 4
B48–F3111–00	22 – 17
	22 – 30

PART NO.	REF. NO.
B7D–F3117–00	22 – 14
B7D–F3118–00	22 – 15
B7D–F3120–00	22 – 20
B7D–F3122–00	39 – 3
B7D–F3126–00	22 – 3
	22 – 27
4TU–F3144–00	22 – 34
B48–F3144–00	22 – 5
	22 – 21
BK6–F3145–00	22 – 7
	22 – 23
B48–F3146–00	22 – 8
	22 – 24
B48–F3147–00	22 – 18
	22 – 31
B48–F3156–00	22 – 6
	22 – 22
B48–F3158–00	22 – 12
B7D–F3170–00	22 – 11
B48–F3171–00	22 – 10
	22 – 26
B8D–F3174–00	21 – 24
B8D–F3175–00	21 – 17
BG7–F317J–00	21 – 25
BK6–F332K–00	22 – 28
B7D–F3340–00	22 – 32
4TU–F3356–00	22 – 13
B7D–F3357–00	22 – 16
B7D–F3393–00	22 – 29
4FP–F3411–20	21 – 2
4FP–F3412–10	21 – 3
5BP–F3416–10	21 – 5
1PA–F3418–00	21 – 8
5VL–F341E–10	21 – 4
B8D–F3435–00	21 – 9
B48–F3441–00	21 – 13
B48–F3442–01	21 – 14
5BP–F3873–01	21 – 1
5BP–F3875–00	22 – 33
B8D–F4110–10	23 – 1
B8D–F411F–00	23 – 2
B7D–F4121–00	24 – 20
B7D–F4122–00	24 – 23
B8D–F4129–00–3E	24 – 8
B8D–F4129–00–P3	24 – 8
B8D–F4129–00–P5	24 – 8
B8D–F412Y–00	23 – 4
B8D–F4139–00–3E	24 – 14

PART NO.	REF. NO.
B8D–F4139–00–P3	24 – 14
B8D–F4139–00–P5	24 – 14
2DP–F413B–00	24 – 43
	24 – 44
54P–F414G–10	23 – 21
B8D–F414J–00	23 – 26
B8D–F4188–00	23 – 14
B8D–F4191–00	23 – 8
B8D–F41B1–00–P1	24 – 1
B8D–F41B1–00–P3	24 – 1
B8D–F41B1–00–P5	24 – 1
B04–F4254–E0	24 – 45
B04–F4254–F0	24 – 45
B04–F4254–H0	24 – 45
BK7–F4312–00	23 – 27
BK6–F4491–00	23 – 20
B8D–F465B–01	18 – 27
B9D–F4730–00	25 – 1
1PM–F4741–00	25 – 2
4LS–F4741–00	25 – 3
B9D–F4741–00	25 – 4
50C–F4742–00	33 – 20
B9D–F4780–00	25 – 6
B8D–F478X–00	25 – 8
B8D–F479K–00	25 – 11
1WD–F510C–01	26 – 2
1WD–F5168–03–98	26 – 1
1WD–F5168–03–P0	26 – 1
1WD–F5168–03–P3	26 – 1
BG7–F5181–00	26 – 8
B97–F530S–00	28 – 2
B7D–F5338–00	28 – 1
B7D–F5338–10	28 – 1
B7D–F5338–40	28 – 1
B97–F5364–00	28 – 4
BK6–F5366–01	28 – 6
B97–F5376–00	28 – 9
B97–F5377–00	28 – 17
5BP–F5381–00	28 – 16
B97–F5383–00	28 – 18
1PA–F5386–00	26 – 7
1CK–F5388–00	28 – 21
BK6–F5414–00	28 – 13
B8D–F5452–00	28 – 10
3C1–F5802–00	27 – 4
3C1–F5803–50	27 – 5
3C1–F5805–10	27 – 12
B97–F5806–00	29 – 4

PART NO.	REF. NO.
B97–F5808–00	33 – 2
5P0–F580A–00	31 – 4
B7D–F580E–00	33 – 1
B48–F580U–01	27 – 3
B97–F580W–00	29 – 3
5HH–F5824–00	29 – 10
5HH–F5825–51	29 – 14
50C–F582A–50	33 – 5
1CK–F582U–00	27 – 1
BK6–F582W–00	29 – 1
B7D–F583T–01	31 – 3
3C1–F5852–00	31 – 6
BK6–F5852–00	33 – 9
2VN–F5854–00	33 – 11
3RW–F5854–00	31 – 5
3C1–F5855–00	31 – 9
50C–F5855–00	33 – 10
50C–F5866–00	33 – 6
3RW–F5867–00	31 – 8
B8D–F5872–00	31 – 2
B8D–F5873–00	33 – 24
BG7–F5875–00	31 – 20
	31 – 23
B8D–F5876–00	31 – 19
BK6–F587A–00	20 – 24
B8D–F5887–00	31 – 17
50C–F5894–11	33 – 8
B7D–F5895–00	33 – 13
50C–F589A–00	33 – 14
5HH–F5914–00	29 – 11
5HH–F5917–00	29 – 8
5YP–F5917–00	27 – 8
5P0–F5919–01	27 – 10
5YP–F5924–00	27 – 11
5YP–F5925–01	27 – 9
5HH–F5937–00	29 – 7
5YP–F5937–00	27 – 7
5YP–F5939–00	27 – 13
B8D–F6111–00	30 – 1
B7D–F61AA–00	38 – 7
1S7–F622F–00	30 – 7
1S7–F622H–00	30 – 6
1CK–F6240–01	30 – 2
20P–F6241–01	30 – 3
2PK–F6246–00	30 – 4
1S7–F6257–00	30 – 5
50C–F6259–00	33 – 21
2CB–F6280–20	30 – 15

PART NO.	REF. NO.
B7D–F6281–00	30 – 12
B7D–F6282–00	30 – 13
2CB–F6290–20	30 – 16
B8D–F6301–00	30 – 9
B8D–F6335–00	30 – 10
3RS–F6372–00	30 – 11
B9D–F7211–00	32 – 24
50C–F7222–00	33 – 4
BS8–F7261–00	32 – 29
B8D–F7311–00	32 – 1
2PK–F7411–00	32 – 9
B7D–F741L–00	32 – 41
B7D–F742L–00	32 – 42
1WD–F7431–01	32 – 34
20P–F7435–00	32 – 13
	32 – 20
B7D–F7437–00	32 – 38
1WD–F7441–01	32 – 35
B7D–F7442–00	32 – 7
B7D–F7443–00	32 – 18
20P–F7451–00	32 – 8
20P–F7461–00	32 – 19
B8D–F8100–00	17 – 8
55C–F815P–00	17 – 10
B7D–F8283–00	34 – 1
B7D–F8284–00	34 – 2
B7D–F8336–00	34 – 12
	34 – 23
B8D–F835U–00–3E	34 – 25
B8D–F835U–00–P4	34 – 25
B8D–F835U–00–P5	34 – 25
B8D–F835V–00–3E	34 – 27
B8D–F835V–00–P4	34 – 27
B8D–F835V–00–P5	34 – 27
B9D–F8365–00	34 – 38
B7D–F836K–00	24 – 5
B7D–F836L–00	24 – 34
B7D–F836M–00	24 – 38
B7D–F837V–00	24 – 26
B7D–F837W–00	24 – 28
B7D–F8385–00	34 – 29
B8D–F8393–60	24 – 46
B8D–F8393–70	24 – 46
B8D–F8393–80	24 – 46
B8D–F8394–60	24 – 47
B8D–F8394–70	24 – 47
B8D–F8394–80	24 – 47
B7D–F8395–00	34 – 34

PART NO.	REF. NO.
BK6–H1410–03	35 – 2
2PV–H1450–01	35 – 1
B8D–H1614–01	43 – 22
BK6–H1800–00	36 – 1
2PH–H1801–10	36 – 2
5D9–H1828–00	36 – 5
1FD–H183G–00	36 – 3
BK6–H1847–00	43 – 12
5D9–H1861–00	36 – 4
BK6–H1861–00	43 – 14
B7D–H1940–00	43 – 16
BK6–H1950–00	43 – 18
BK8–H1960–00	43 – 15
B7D–H1975–00	18 – 14
14D–H2100–00	42 – 5
5TL–H2131–00	25 – 5
B8D–H2131–00	42 – 6
B8D–H2150–01	42 – 7
B65–H2151–00	42 – 21
B65–H2151–10	42 – 8
B65–H2151–80	42 – 20
B0A–H2310–00	42 – 1
BK6–H2370–00	42 – 4
B8D–H252C–00	42 – 14
B7D–H252E–00	42 – 10
B2S–H2530–10	42 – 18
BK6–H2540–01	43 – 3
BG7–H2568–00	42 – 16
1PA–H2576–00	43 – 17
B8D–H2589–00	43 – 23
B8D–H2590–10	42 – 19
3KA–H2911–00	41 – 5
5BP–H2917–00	41 – 8
B48–H3310–00	37 – 1
2CB–H3311–00	37 – 2
	37 – 8
	37 – 15
	37 – 21
2PV–H3318–00	37 – 13
3C1–H3318–00	37 – 26
B48–H3320–00	37 – 7
1PA–H3328–00	37 – 4
	37 – 10
	37 – 17
	37 – 23
B7D–H3330–00	37 – 14
1PA–H3333–00	37 – 5
	37 – 11

PART NO.	REF. NO.
1PA–H3333–00	37 – 18
	37 – 24
2CB–H333A–00	37 – 3
	37 – 22
B7D–H3340–00	37 – 20
2CB–H334A–00	37 – 9
	37 – 16
1PA–H3350–00	43 – 26
1PA–H3358–00	37 – 6
	37 – 12
	37 – 19
	37 – 25
B7D–H3371–00	43 – 27
B8D–H3500–03	38 – 1
B7D–H3571–01	38 – 2
52B–H3591–00	43 – 6
B48–H3755–01	43 – 9
2TP–H3912–00	41 – 6
3KA–H3913–00	41 – 7
38B–H3922–00	31 – 10
3RS–H3936–00	31 – 21
3KA–H3945–00	41 – 9
B8D–H3972–00	41 – 1
B8D–H3976–00	41 – 3
1YD–H3980–10	31 – 13
B8D–H4130–00	21 – 18
B8D–H4144–00–3E	39 – 8
B8D–H4144–00–P1	39 – 8
B8D–H4144–00–P2	39 – 8
B7D–H4300–01	39 – 1
B7D–H4301–00	39 – 6
B7D–H4302–00	39 – 7
1WD–H4547–00	40 – 6
B7D–H4710–00	40 – 1
1CK–H4726–00	40 – 5
BHM–H4740–00	40 – 4
1WD–H4744–00	40 – 7
2FC–H5111–00	18 – 35
BE1–H5130–00	40 – 3
B8D–H5546–10	43 – 2
B7D–H5752–00	23 – 19
B8D–H591A–10	43 – 1
2DP–H592A–20	43 – 8
BK6–H6110–10	43 – 11
4C9–W0048–00	27 – 6
B7D–WF479–00	25 – 10
B7D–XH250–00	42 – 9
90101–08006	28 – 22

PART NO.	REF. NO.
90105–06090	42 – 15
90105–088H9	1 – 17
90105–088J0	1 – 16
90105–10225	17 – 2
90105–10886	17 – 3
90105–10887	20 – 14
90105–10888	32 – 3
90109–06202	24 – 2
	34 – 4
	34 – 15
90109–06220	18 – 12
	19 – 16
90109–06279	16 – 2
90109–06577	31 – 11
90109–068B2	19 – 18
	19 – 21
90109–068B3	34 – 39
90109–068C3	24 – 35
	24 – 39
90110–05806	23 – 15
90110–06102	34 – 5
	34 – 16
90110–06245	23 – 9
90110–06846	8 – 13
90110–06873	12 – 7
90110–06894	1 – 23
90110–08052	23 – 3
90110–08071	32 – 43
90110–08803	32 – 17
	32 – 32
90110–10012	32 – 16
90111–05003	21 – 27
	39 – 4
90111–05809	38 – 8
90111–05817	24 – 6
90111–05822	7 – 2
90111–06117	34 – 30
	34 – 35
90111–06137	18 – 4
90111–06177	42 – 13
90111–06847	18 – 7
90111–06856	19 – 2
	19 – 7
90111–06860	9 – 4
90111–08087	27 – 2
90111–08089	29 – 2
90116–08846	28 – 11
90119–05071	18 – 25

PART NO.	REF. NO.
90119–06114	8 – 24
90119–06810	24 – 10
	24 – 16
90123–08046	41 – 15
90149–05801	1 – 10
90149–08220	9 – 8
90149–10804	27 – 14
90151–03005	41 – 10
90154–05041	21 – 26
90159–06860	19 – 5
	19 – 10
	42 – 17
90160–05810	34 – 13
	34 – 24
90170–05803	3 – 9
	3 – 15
90170–10012	2 – 28
90170–14801	13 – 23
90176–22081	21 – 11
90179–04003	40 – 9
90179–05849	24 – 36
	24 – 40
	38 – 9
90179–08148	41 – 14
90179–10805	17 – 4
	20 – 16
90179–12808	13 – 4
90179–25615	21 – 6
90183–03010	18 – 30
90183–050A7	18 – 24
	24 – 4
	39 – 2
90183–05807	18 – 13
	19 – 3
	19 – 8
	19 – 25
	19 – 29
	24 – 3
	24 – 7
	24 – 13
	24 – 19
	24 – 21
	24 – 24
	34 – 11
	34 – 22
	34 – 26
	34 – 28
	39 – 9

PART NO.	REF. NO.
90183–06800	18 – 19
90185–10815	21 – 15
90201–04817	40 – 11
90201–05036	38 – 4
90201–06029	18 – 9
90201–06557	18 – 38
90201–06828	33 – 22
90201–06880	6 – 15
90201–08066	33 – 17
90201–08612	9 – 7
90201–08859	1 – 18
90201–10021	32 – 28
90201–10066	32 – 15
90201–10118	31 – 16
	33 – 26
90201–12019	13 – 3
	35 – 6
90201–15814	28 – 20
90201–15821	2 – 17
90201–173F4	14 – 24
90201–220T0	21 – 12
90201–22793	14 – 22
90201–25290	12 – 5
90202–26142	21 – 7
90208–20003	13 – 31
90209–17285	14 – 3
90209–18208	14 – 16
90214–10800	2 – 18
90215–10803	2 – 27
90215–14802	13 – 22
90240–08005	33 – 16
90240–08144	32 – 11
90240–08145	32 – 22
	32 – 39
90241–03800	18 – 28
90249–02002	32 – 14
90252–18800	16 – 13
90269–06816	18 – 18
	19 – 4
	19 – 9
	19 – 26
	19 – 30
	24 – 37
	24 – 41
	34 – 7
	34 – 18
	39 – 5
90280–03017	2 – 10

PART NO.	REF. NO.
90282–05031	2 – 26
90338–06018	34 – 8
	34 – 19
90340–12813	1 – 3
90340–14824	11 – 5
90340–32823	11 – 7
90387–06205	18 – 2
90387–064W3	6 – 16
90387–06899	24 – 11
	24 – 17
	34 – 31
	34 – 36
90387–068M3	23 – 6
	23 – 11
90387–068P5	18 – 6
90387–068S1	20 – 9
	20 – 20
	20 – 23
	21 – 20
90387–06M30	42 – 3
90387–08079	21 – 22
90387–08842	32 – 30
90387–10003	32 – 4
90387–10814	20 – 13
90387–15810	2 – 23
90387–17804	14 – 14
90401–10812	31 – 15
	33 – 25
90430–06803	1 – 5
	1 – 27
90430–10806	43 – 7
90445–16807	32 – 27
90445–21848	32 – 6
90450–27806	6 – 20
90450–43805	8 – 28
90464–13073	43 – 21
90464–18808	31 – 1
90464–36800	43 – 20
90464–50800	43 – 19
90465–13M24	17 – 9
90467–08003	19 – 15
90467–11825	8 – 27
90467–12052	8 – 26
90467–12085	33 – 12
90467–12800	8 – 21
90467–19803	6 – 5
90467–20804	8 – 23
90467–20805	6 – 22

PART NO.	REF. NO.
90467–20806	6 – 6
90480–01558	17 – 6
90480–01559	34 – 9
	34 – 20
90480–01803	6 – 17
90480–10623	34 – 10
	34 – 21
90480–12072	18 – 5
90480–12805	18 – 3
90480–12808	24 – 9
	24 – 15
	34 – 32
	34 – 37
90480–14004	38 – 6
90480–15363	6 – 13
90480–18813	23 – 5
	23 – 10
90501–06022	15 – 3
90501–06800	15 – 8
90501–12743	32 – 36
90501–16800	2 – 19
90501–18576	7 – 5
90506–20193	32 – 26
90506–28800	32 – 2
90508–09007	18 – 29
90508–183B9	32 – 10
90508–184B0	32 – 21
90508–32837	16 – 5
90520–01804	42 – 12
90520–03800	23 – 24
90520–08007	23 – 25
90520–08804	18 – 32
90520–08820	40 – 10
90560–08326	18 – 11
91312–05010	23 – 16
	23 – 22
91312–05016	4 – 2
91312–10040	22 – 35
91317–05035	30 – 14
91317–06030	30 – 8
91317–08030	21 – 16
91317–08035	21 – 10
91332–06014	43 – 10
91332–06016	35 – 4
91332–06020	8 – 3
91332–06025	35 – 3
91401–20012	33 – 18
91401–25015	32 – 12

PART NO.	REF. NO.
91401–25015	32 – 23
	32 – 40
92012–06016	20 – 10
	20 – 19
	20 – 22
92017–05016	24 – 27
	24 – 29
92017–08025	33 – 19
92902–06200	16 – 12
92907–06600	41 – 13
93101–10843	11 – 19
93102–08800	1 – 14
93102–12862	13 – 29
93102–12891	16 – 8
93102–22827	14 – 27
93103–10801	5 – 2
93106–17801	20 – 17
93106–22808	28 – 5
93106–26815	26 – 3
	28 – 8
93210–09806	4 – 4
93210–108H5	41 – 16
93210–148F8	11 – 6
93210–15620	33 – 7
93210–19809	5 – 14
	11 – 18
93210–21801	43 – 4
93210–26805	36 – 6
93210–32816	11 – 8
93210–34802	7 – 6
93210–39803	5 – 11
93210–54805	7 – 12
93306–000Y3	5 – 7
93306–001YJ	4 – 5
93306–054XC	28 – 7
93306–054XF	14 – 8
93306–203XK	2 – 24
	2 – 25
93306–252YN	14 – 9
93306–252YP	28 – 3
93306–253X2	14 – 25
93306–272YC	14 – 26
93306–302YN	26 – 4
93306–305X7	2 – 8
93306–305XV	2 – 9
93310–325YC	12 – 4
93310–526YT	2 – 3
93315–112Y8	13 – 28

PART NO.	REF. NO.
93315–317Y1	20 – 12
93317–218Y1	20 – 3
93410–20038	14 – 4
93410–22039	14 – 17
	14 – 23
93450–16115	2 – 13
93501–04830	32 – 37
93505–16844	13 – 27
93604–08071	2 – 20
93608–30839	16 – 7
93822–14800	14 – 28
93900–00824	26 – 6
	28 – 15
94111–17801	26 – 5
94114–17802	28 – 14
94568–J9096	4 – 11
94568–K1131	28 – 24
94668–K1021	28 – 25
94700–00439	1 – 19
95022–06010	14 – 30
95022–06012	43 – 25
95022–06016	11 – 11
	25 – 12
95022–06030	23 – 7
	23 – 12
95022–06040	10 – 6
	11 – 4
	11 – 15
95022–06045	10 – 4
95022–06050	11 – 16
95022–06055	10 – 3
95022–06070	10 – 5
95022–06090	11 – 20
95022–08020	21 – 23
95027–06010	31 – 18
	31 – 22
	31 – 24
95027–06014	21 – 21
95027–06025	31 – 14
95302–08700	28 – 23
	33 – 3
95602–06100	31 – 12
	41 – 11
95602–06200	18 – 31
	18 – 39
95602–08200	28 – 12
95602–10200	32 – 5
95602–12200	20 – 7

PART NO.	REF. NO.
95602–14200	26 – 9
	28 – 19
95607–06200	18 – 16
95612–08618	1 – 6
95702–06500	18 – 8
95702–08500	9 – 6
95702–12500	35 – 5
95707–05500	18 – 36
95707–06500	25 – 7
95812–06025	8 – 10
95822–06012	18 – 17
95822–06014	25 – 9
95D32–06012	43 – 28
95D32–06016	43 – 13
95D32–06025	6 – 14
95E32–06010	1 – 4
	1 – 26
95E32–06012	7 – 14
95E32–06014	4 – 10
95E32–06020	6 – 3
	7 – 10
95E32–06025	4 – 20
	5 – 13
95E32–06030	1 – 11
95E32–06080	7 – 11
97007–06025	41 – 12
97012–06020	16 – 15
97080–06020	42 – 2
97602–05208	42 – 11
97702–30016	38 – 3
97702–50012	24 – 31
	24 – 33
97702–50016	18 – 23
	24 – 12
	24 – 18
	24 – 22
	24 – 25
	39 – 12
	40 – 2
97707–50012	21 – 19
	34 – 6
	34 – 17
	39 – 10
	39 – 11
97707–50014	38 – 5
97707–50016	19 – 19
	19 – 22
	19 – 24

PART NO.	REF. NO.
97707–50016	19 – 28
	34 – 33
97707–50025	8 – 19
98502–05016	43 – 5
98507–04025	41 – 2
	41 – 4
98507–06020	18 – 37
98507–06025	33 – 23
98512–06012	14 – 11
98907–04020	40 – 8
99001–10600	16 – 6
99009–20500	13 – 30
99530–08012	1 – 12
99530–10114	1 – 21
	1 – 22
	10 – 2
	11 – 3
	11 – 14

PART NO.	REF. NO.

PART NO.	REF. NO.

PART NO.	REF. NO.

PART NO.	REF. NO.