YAMAHA

PARTS CATALOGUE

CM6

DNPM1

VRC1

MDNMA
BDK2

T135F (BDK1) MALAYSIA
T135F (BDK2) MALAYSIA

YAMAHA
GENUINE
Parts & Accessories

1XBDK-440E1

( )

T135F
PARTS CATALOGUE
©2022 by Yamaha Motor Co., Ltd.
1st edition, January 2022
All rights reserved.
Any reprinting or unauthorized use
without the written permission of
Yamaha Motor Co., Ltd.
is expressly prohibited.
Printed in Japan.

FOREWORD

This Parts Catalogue is related to the parts for the model(s) on the cover page. When you are ordering replacement parts, please refer to this Parts Catalogue and quote both part numbers and part names correctly.

1. Modifications or additions which have been made after the issue of the Parts Catalogue will be announced in the Parts News.
   It is advisable that you make the necessary corrections to the Parts Catalogue according to the Parts News.

2. Abbreviations
   The following abbreviations are used in this Parts Catalogue.

   "UR" Use specified parts number.

   "UN" Use as many as needed.

   "AP" Alternate Parts

   "LM" Locally Made (Parts need to be ordered locally)

   "F#" Frame No. (Applicable machine No.)

   "O/S" Over Size

3. The number of components for assembly
   - Parts, which are to be supplied in an assembly, are listed with a dot (.) in front of the part name as shown below.
   - The numeral appearing to the right of each component part indicates the quantity of parts for each assembly unit.

PART NO.	DESCRIPTION	Q'TY	REMARKS
2F5–83310–60	FRONT FLASHER LIGHT ASSY	2	
115–83311–60	.BULB (6V–18W)	1	

4. Applicable colours of graphics are represented in the "REMARKS" as shown below.

PART NO.	DESCRIPTION	Q'TY	REMARKS
2N4–24110–00–X5	FUEL TANK COMP.	2	MXR
3J1–24240–10	.GRAPHIC, FUEL TANK	1	FOR MXR

5. Note that the illustrations for reference in finding parts numbers are not to be used for assembling. When assembling, please use the applicable service manual.

6. The asterisk (*) before a reference number indicates modified items after the first edition.

7. Applicable Serial No.

Frame Serial No.

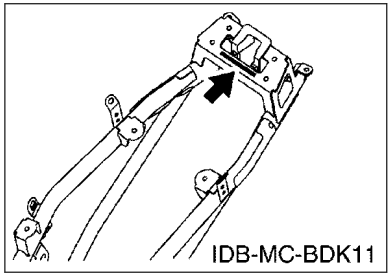

Engine Serial No.

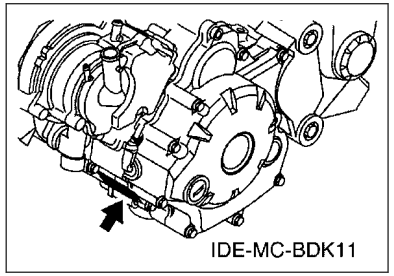

8. Applicable Colour Code (The (*) mark shows Model colour.)

Abbreviation	Colour Name	Colour Code
CM6(*)	CYAN METALLIC 6	1344
DBNM8	DARK BLUISH GRAY METALLIC 8	0919
DNMG	DARK GRAY METALLIC G	1086
DNPM1(*)	DARK GRAYISH PURPLE METALLIC 1	0740
MBL2	MAT BLACK 2	0582
MDNMA(*)	MAT DARK GRAY METALLIC A	1760
MDOM2	MAT DULL ORANGE METALLIC 2	1851
SMX	BLACK METALLIC X	0903
VRC1(*)	VIVID RED COCKTAIL 1	0121
YB	YAMAHA BLACK	0033

9. Applicable Starting Serial No.

Frame Serial No.

Serial No.	Name Of Q’ty Column	Model Code

Engine Serial No.

Serial No.	Name Of Q’ty Column	Model Code

CONTENTS

ENGINE

CYLINDER HEAD....1
CRANKSHAFT & PISTON....2
VALVE....3
CAMSHAFT & CHAIN....4
WATER PUMP....5
RADIATOR & HOSE....6
OIL PUMP....7
INTAKE....8
EXHAUST....10
CRANKCASE....11
CRANKCASE COVER 1....12
STARTER CLUTCH....13
CLUTCH....14
TRANSMISSION....16
SHIFT CAM & FORK....18
SHIFT SHAFT....19

CHASSIS

FRAME....20
FENDER....21
SIDE COVER....22
SIDE COVER 2....24
REAR ARM & SUSPENSION....25
STEERING....26
FRONT FORK....27
FUEL TANK....28
SEAT....29
FRONT WHEEL....30
FRONT BRAKE CALIPER....31
REAR WHEEL....32
REAR BRAKE CALIPER....33
STEERING HANDLE & CABLE....34
FRONT MASTER CYLINDER....36
STAND & FOOTREST....37
REAR MASTER CYLINDER....39
LEG SHIELD....41
LEG SHIELD 2....44
GENERATOR....47
STARTING MOTOR....48
FLASHER LIGHT....49
METER....50
HEADLIGHT....51
TAILLIGHT....52
HANDLE SWITCH & LEVER....53
ELECTRICAL 1....54
ELECTRICAL 2....55

INDEX

NUMERICAL INDEX....56

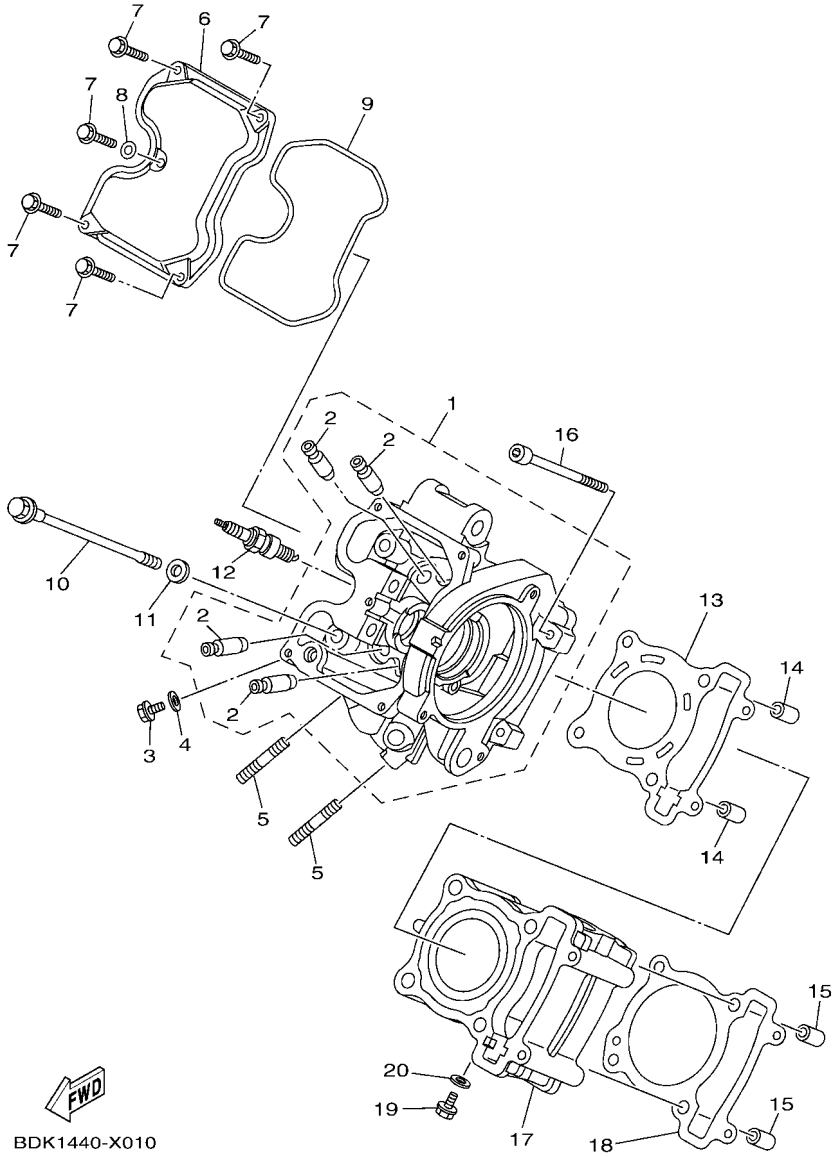

FIG. 1 CYLINDER HEAD

REF. NO.	PART NO.	DESCRIPTION	BDK1	BDK2				REMARKS
1	BDK–E1102–00	CYLINDER HEAD ASSY	1	1				
2	1S7–E1133–10	.GUIDE, VALVE 1	4	4				
3	95E32–06010	BOLT, FLANGE DEEP RECESS	1	1				
4	90430–06803	GASKET	1	1				
5	95612–08630	BOLT, STUD	2	2				
6	B17–E1191–00	COVER, CYLINDER HEAD 1	1	1				
7	95E32–06020	BOLT, FLANGE DEEP RECESS	5	5				
8	90430–06803	GASKET	1	1				
9	2PV–E1193–00	GASKET, HEAD COVER 1	1	1				
10	90105–08850	BOLT, FLANGE	4	4				
11	90201–08609	WASHER, PLATE	4	4				
12	94700–00884	PLUG, SPARK (NGK CPR8EA)	1	1				
13	1S8–E1181–01	GASKET, CYLINDER HEAD 1	1	1				
14	99530–10114	PIN, DOWEL	2	2				
15	99530–10114	PIN, DOWEL	2	2				
16	91312–06100	BOLT, HEXAGON SOCKET HEAD	2	2				
17	50C–E1311–00	CYLINDER 1	1	1				
18	55D–E1351–00	GASKET, CYLINDER	1	1				
19	95E32–06010	BOLT, FLANGE DEEP RECESS	1	1				
20	90430–06803	GASKET	1	1				

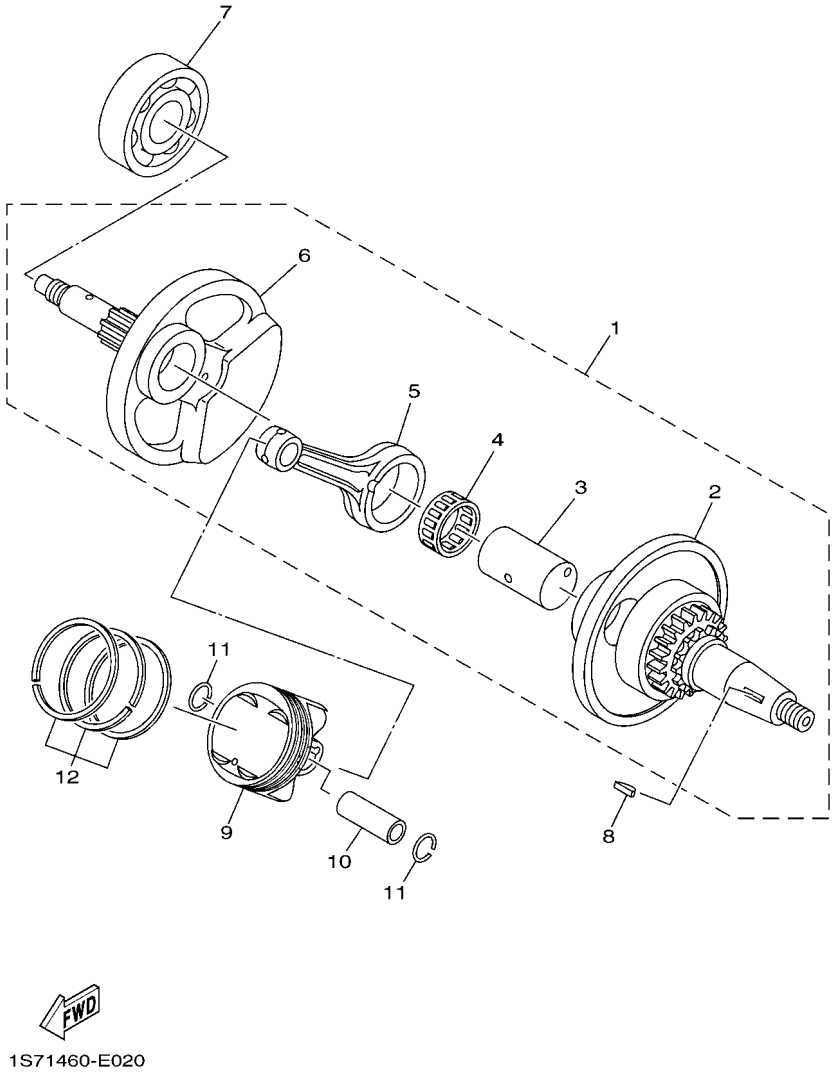

FIG. 2 CRANKSHAFT & PISTON

REF. NO.	PART NO.	DESCRIPTION	BDK1	BDK2				REMARKS
1	1S8–WE140–13	CRANKSHAFT ASSY	1	1				
2	1S8–WE141–00	.CRANK SUB ASSY 1	1	1				
3	1S7–E1681–20	.PIN, CRANK 1	1	1				
4	93310–528X7	.BEARING	1	1				
5	1S8–E1651–00	.ROD, CONNECTING	1	1				
6	1S8–E1422–00	.CRANK 2	1	1				
7	93306–305X7	BEARING	1	1				
8	90280–03017	KEY, WOODRUFF	1	1				
9	1S9–E1631–00	PISTON (STD)	1	1				
10	1S8–11633–01	PIN, PISTON	1	1				
11	93450–16115	CIRCLIP	2	2				
12	50C–E1603–00	PISTON RING SET (STD)	1	1				

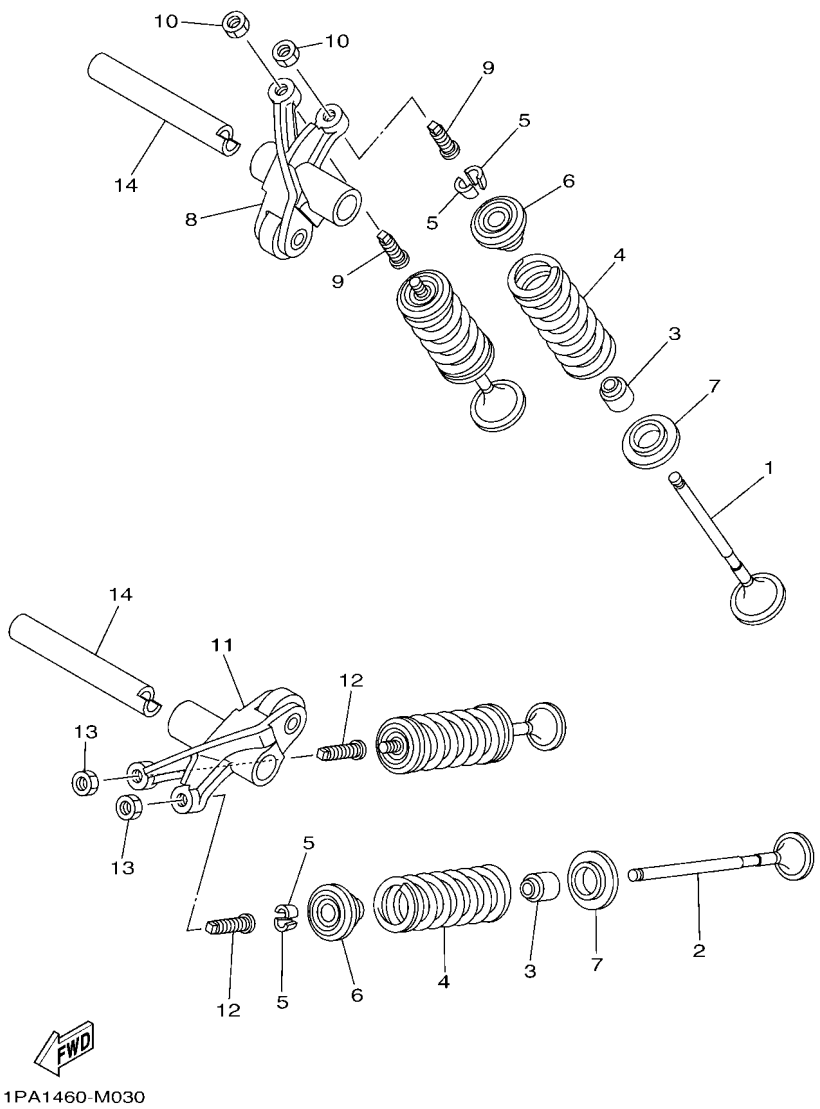

FIG. 3 VALVE

REF. NO.	PART NO.	DESCRIPTION	BDK1	BDK2				REMARKS
1	2PV–E2111–00	VALVE, INTAKE	2	2				
2	BDK–E2121–00	VALVE, EXHAUST	2	2				
3	1PA–E2119–00	SEAL, VALVE STEM	4	4				
4	5YP–E2113–00	SPRING, VALVE INNER	4	4				
5	3S0–E2118–00	LOCK, VALVE SPRING RETAINER	8	8				
6	1PA–E2117–00	RETAINER, VALVE SPRING	4	4				
7	55P–E2126–00	SEAT, VALVE SPRING 2	4	4				
8	2ND–E2151–00	ARM, VALVE ROCKER	1	1				
9	2ND–E2159–00	SCREW, VALVE ADJUSTING	2	2				
10	90170–05803	NUT	2	2				
11	2ND–E2161–00	ARM, VALVE ROCKER 2	1	1				
12	2ND–E2159–00	SCREW, VALVE ADJUSTING	2	2				
13	90170–05803	NUT	2	2				
14	1CK–E2156–00	SHAFT, ROCKER 2	2	2				

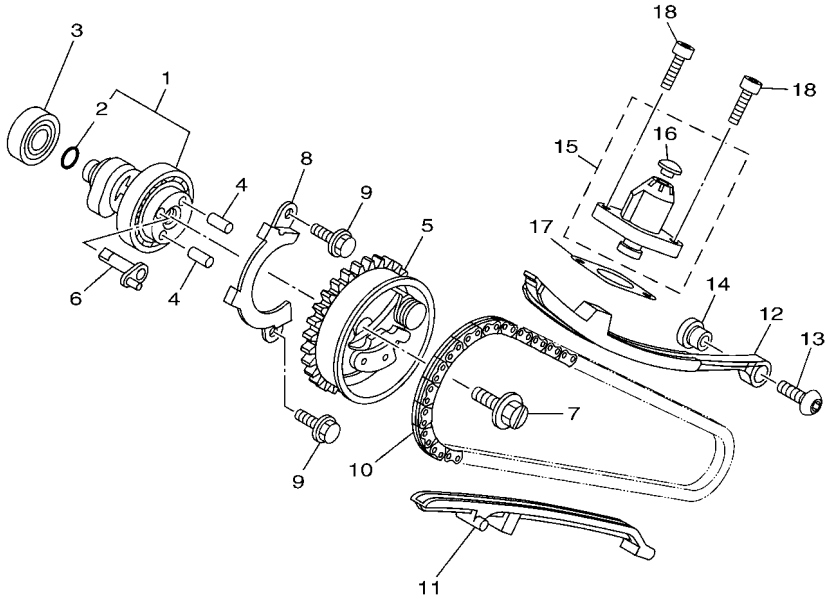

55D1440-K040

FIG. 4 CAMSHAFT & CHAIN

REF. NO.	PART NO.	DESCRIPTION	BDK1	BDK2				REMARKS
1	21S–E2170–01	CAMSHAFT ASSY 1	1	1				
2	93210–09805	.O-RING	1	1				
3	93306–001X2	BEARING	1	1				
4	93605–06800	PIN, DOWEL	2	2				
5	2PV–E2280–00	DECOMPRESSION ASSY	1	1				
6	1S7–E2288–00	CAM, DECOMPRESSION	1	1				
7	5YP–E2157–01	BOLT	1	1				
8	1S8–E111F–00	PLATE	1	1				
9	95E32–06010	BOLT, FLANGE DEEP RECESS	2	2				
10	94568–A8096	CHAIN	1	1				
11	1PA–E2231–00	GUIDE, STOPPER 1	1	1				
12	5YP–E2241–00	GUIDE, STOPPER 2	1	1				
13	90149–06829	SCREW	1	1				
14	1S8–E5598–00	COLLAR	1	1				
15	5MX–E2210–00	TENSIONER ASSY, CAM CHAIN	1	1				
16	5MX–E2222–00	.PLUG	1	1				
17	1S8–E2213–01	GASKET, TENSIONER CASE	1	1				
18	91332–06016	BOLT	2	2				

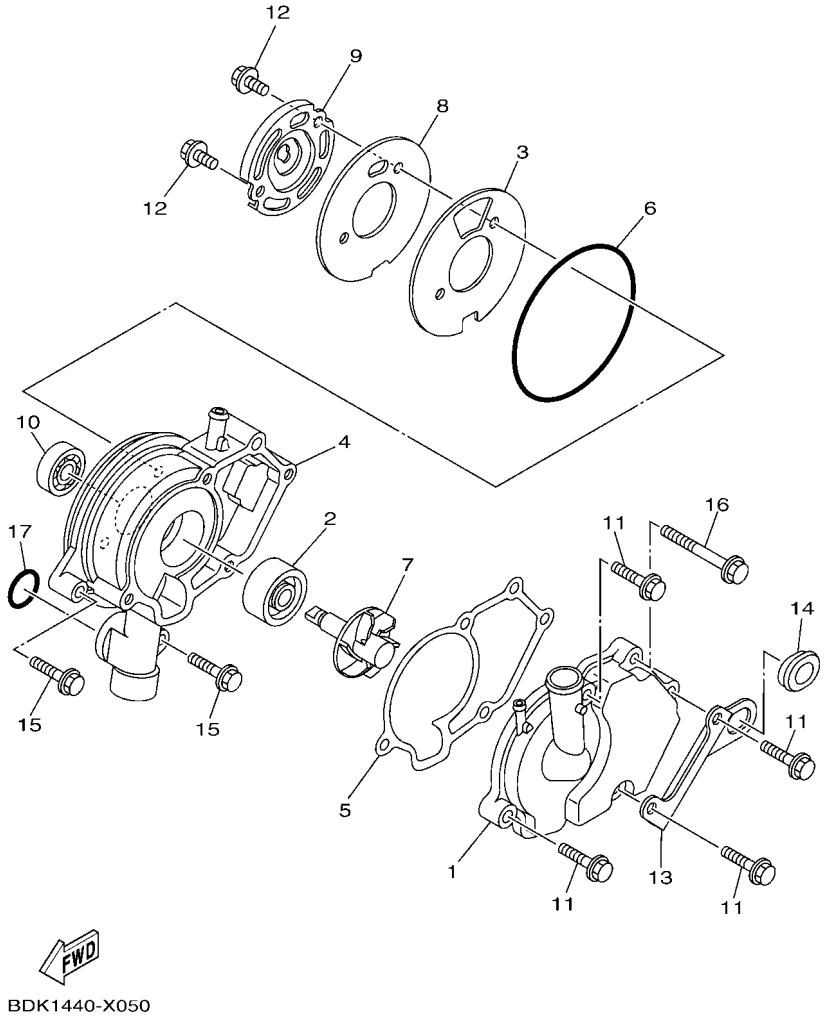

FIG. 5 WATER PUMP

REF. NO.	PART NO.	DESCRIPTION	BDK1	BDK2				REMARKS
1	1S7–E2422–00	COVER, HOUSING	1	1				
2	93103–10801	OIL SEAL	1	1				
3	50C–E2428–00	GASKET, HOUSING COVER 2	1	1				
4	2PV–E1185–00	COVER, CYLINDER HEAD SIDE 3	1	1				
5	1S7–E1196–00	GASKET, CYLINDER HEAD SIDE	1	1				
6	93210–84801	O-RING	1	1				
7	1S7–E2450–01	IMPELLER SHAFT ASSY	1	1				
8	50C–E1951–00	PLATE	1	1				
9	1S7–E1952–02	PLATE	1	1				
10	93306–000Y3	BEARING	1	1				
11	95027–06025	BOLT, FLANGE	4	4				
12	95027–06012	BOLT, FLANGE	2	2				
13	BDK–E244E–00	BRACKET 1	1	1				
14	90480–01868	GROMMET	1	1				
15	95E32–06025	BOLT, FLANGE DEEP RECESS	2	2				
16	95E32–06050	BOLT, FLANGE DEEP RECESS	1	1				
17	93210–19809	O-RING	1	1				

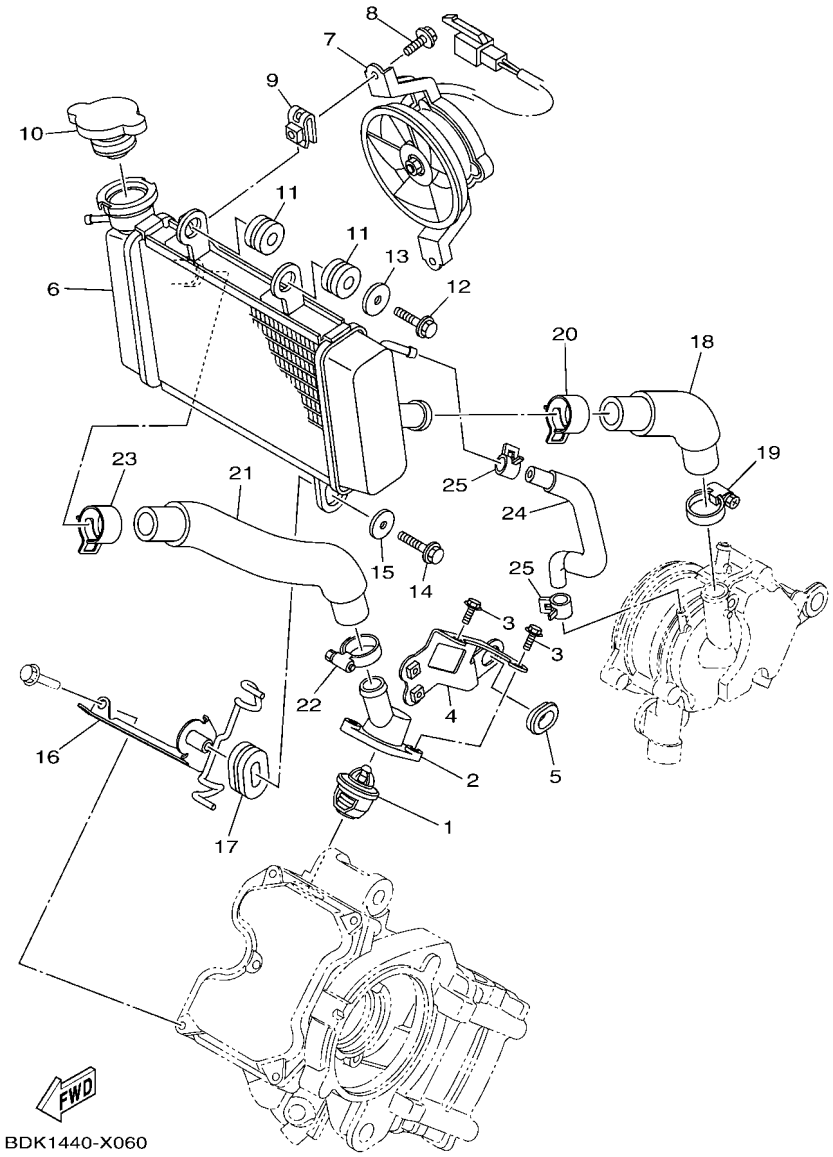

FIG. 6 RADIATOR & HOSE

REF. NO.	PART NO.	DESCRIPTION	BDK1	BDK2				REMARKS
1	B48–E2411–00	THERMOSTAT	1	1				
2	1S8–E2413–00	COVER, THERMOSTAT	1	1				
3	95E32–06020	BOLT, FLANGE DEEP RECESS	2	2				
4	BDK–E244F–00	BRACKET 2	1	1				
5	90480–01868	GROMMET	1	1				
6	5YP–E2461–00	RADIATOR COMP	1	1				
7	5YP–E2405–00	BLOWER ASSY	1	1				
8	5YP–E2675–00	BOLT, BLOWER HOLDING	2	2				
9	5YP–E2671–00	NUT 1	2	2				
10	5P0–E2590–00	CONDUCTION ASSY	1	1				
11	90480–15363	GROMMET	2	2				
12	95827–06016	BOLT, FLANGE	1	1				
13	90201–06069	WASHER, PLATE	1	1				
14	95D02–06020	BOLT, FLANGE DEEP RECESS	1	1				
15	90201–06021	WASHER, PLATE	1	1				
16	BDK–E2443–00	STAY	1	1				
17	90480–01803	GROMMET	1	1				
18	1S8–E2481–00	PIPE 1	1	1				
19	90450–27806	HOSE CLAMP ASSY	1	1				
20	90467–22801	CLIP	1	1				
21	1S8–E2482–00	PIPE 2	1	1				
22	90450–27806	HOSE CLAMP ASSY	1	1				
23	90467–22801	CLIP	1	1				
24	5YP–E2576–00	HOSE 1	1	1				
25	90467–10038	CLIP	2	2				

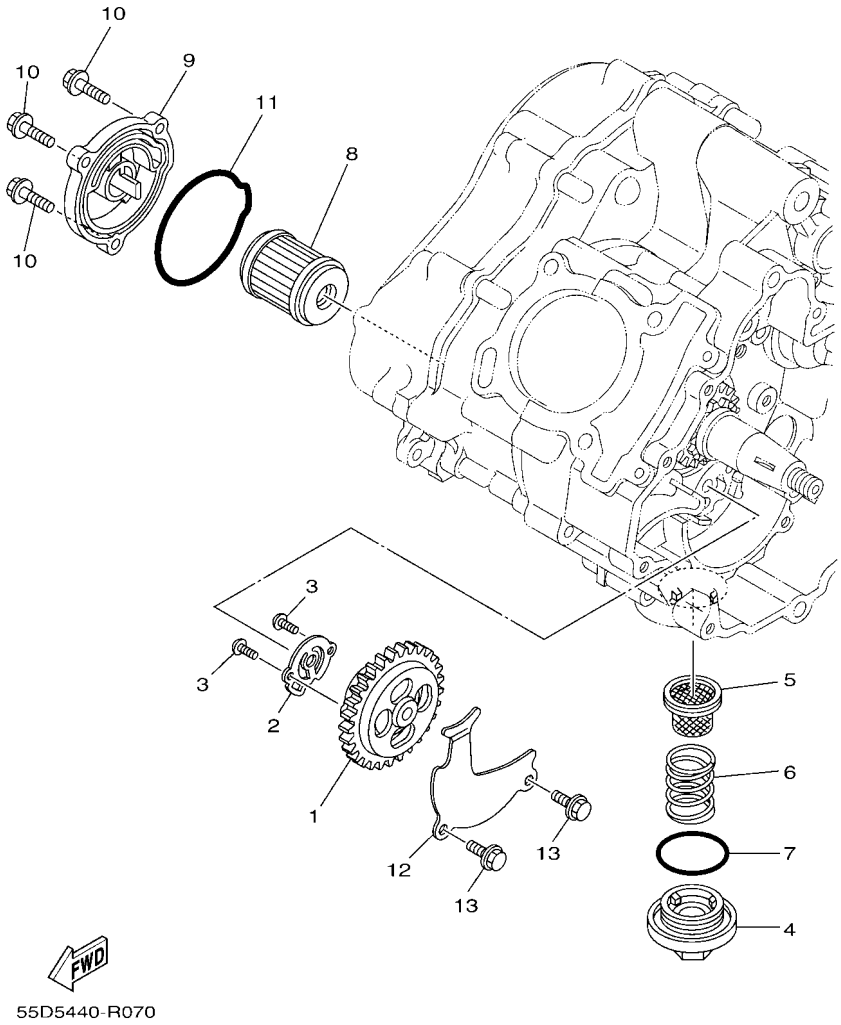

FIG. 7 OIL PUMP

REF. NO.	PART NO.	DESCRIPTION	BDK1	BDK2				REMARKS
1	1S7–E3300–00	OIL PUMP ASSY	1	1				
2	1S8–E3329–00	GASKET, PUMP COVER	1	1				
3	92017–05025	BOLT, BUTTON HEAD	2	2				
4	1S8–E5351–00	PLUG, DRAIN	1	1				
5	1S8–E3411–00	STRAINER, OIL	1	1				
6	90501–18576	SPRING, COMPRESSION	1	1				
7	93210–34801	O-RING	1	1				
8	38B–E3440–01	ELEMENT ASSY, OIL CLEANER	1	1				
9	55D–E3447–10	COVER, OIL ELEMENT	1	1				
10	95E32–06020	BOLT, FLANGE DEEP RECESS	3	3				
11	93210–59800	O-RING	1	1				
12	1S8–E3327–00	COVER, PUMP GEAR	1	1				
13	95E32–06012	BOLT, FLANGE DEEP RECESS	2	2				

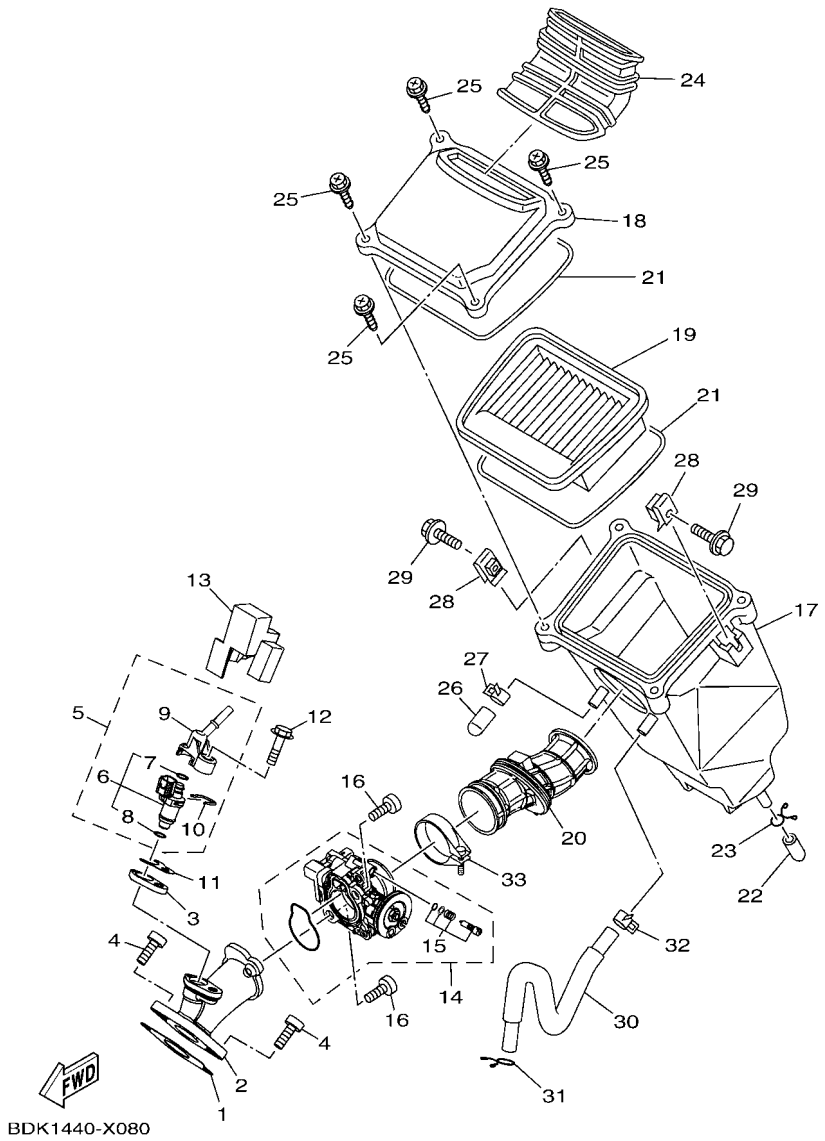

FIG. 8 INTAKE

REF. NO.	PART NO.	DESCRIPTION	BDK1	BDK2				REMARKS
1	BDK–E4199–00	GASKET	1	1				
2	BDK–E3585–00	MANIFOLD	1	1				
3	2FB–E3556–00	GASKET, MANIFOLD	1	1				
4	91332–06020	BOLT	2	2				
5	BDK–E3770–00	INJECTOR ASSY	1	1				
6	BB8–E3761–10	.INJECTOR	1	1				
7	54P–E4147–00	..O-RING	1	1				
8	5CA–E4147–00	..O-RING	1	1				
9	BDK–E3938–00	.PIPE	1	1				
10	54P–E4137–00	.CLIP	1	1				
11	BDK–E3557–00	GASKET	1	1				
12	95812–06030	BOLT, FLANGE	1	1				
13	BDK–E3767–00	CAP, INJECTOR	1	1				
14	BDK–E3750–00	THROTTLE BODY ASSY	1	1				
15	BDK–14104–00	.AIR SCREW SET	1	1				
16	90110–06846	BOLT, HEXAGON SOCKET HEAD	2	2				
17	1S7–E4411–00	CASE, AIR CLEANER 1	1	1				
18	1S7–E4412–00	CAP, CLEANER CASE 1	1	1				
19	1S7–E4450–00	ELEMENT ASSY, AIR CLEANER	1	1				
20	BDK–E4453–00	JOINT, AIR CLEANER 1	1	1				
21	1S7–E4452–00	SEAL	2	2				
22	5TL–E443E–00	PIPE, DRAIN	1	1				
23	90467–12800	CLIP	1	1				
24	1S7–E4437–00	DUCT	1	1				
25	90163–05803	SCREW, TAPPING	4	4				
26	2PK–E443H–00	PIPE, DRAIN 3	1	1				
27	90467–13802	CLIP	1	1				

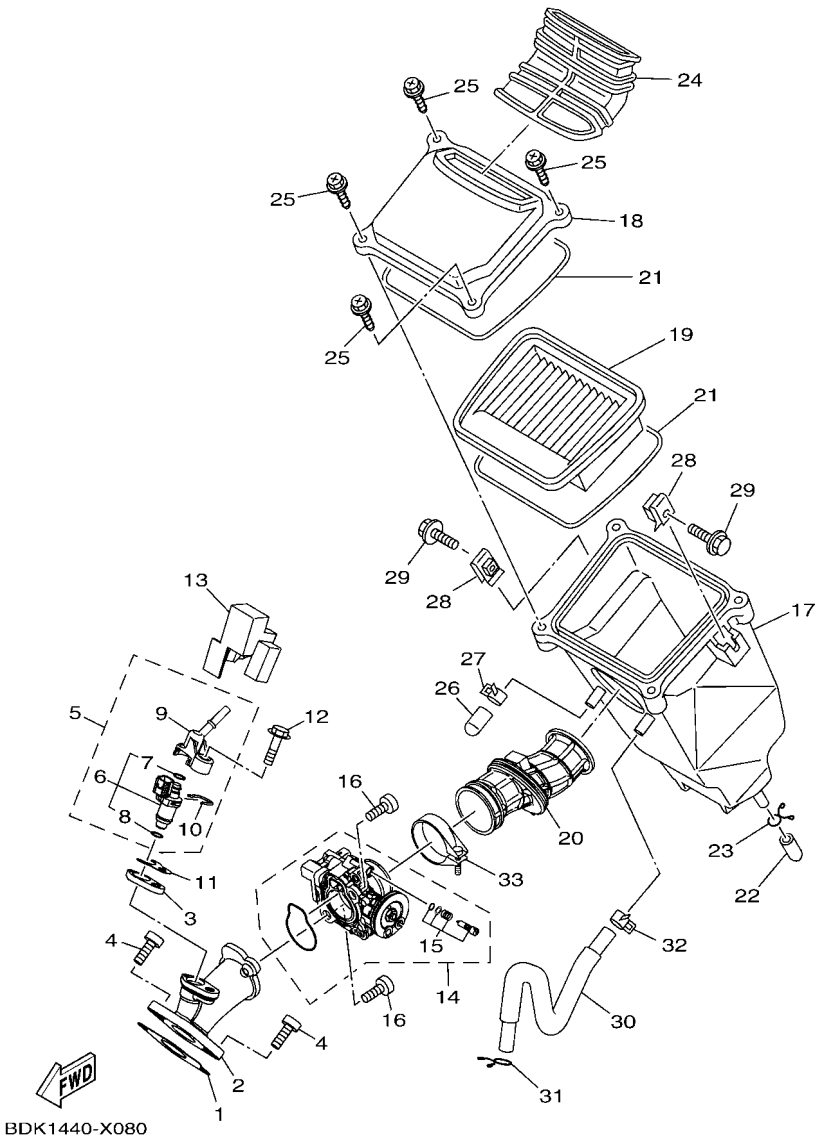

FIG. 8 INTAKE

REF. NO.	PART NO.	DESCRIPTION	BDK1	BDK2				REMARKS
28	90183–06023	NUT, SPRING	2	2				
29	90119–06051	BOLT, WITH WASHER	2	2				
30	55P–E1166–00	PIPE, BREATHER 1	1	1				
31	90467–13858	CLIP	1	1				
32	90467–13064	CLIP	1	1				
33	90450–43805	HOSE CLAMP ASSY	1	1				

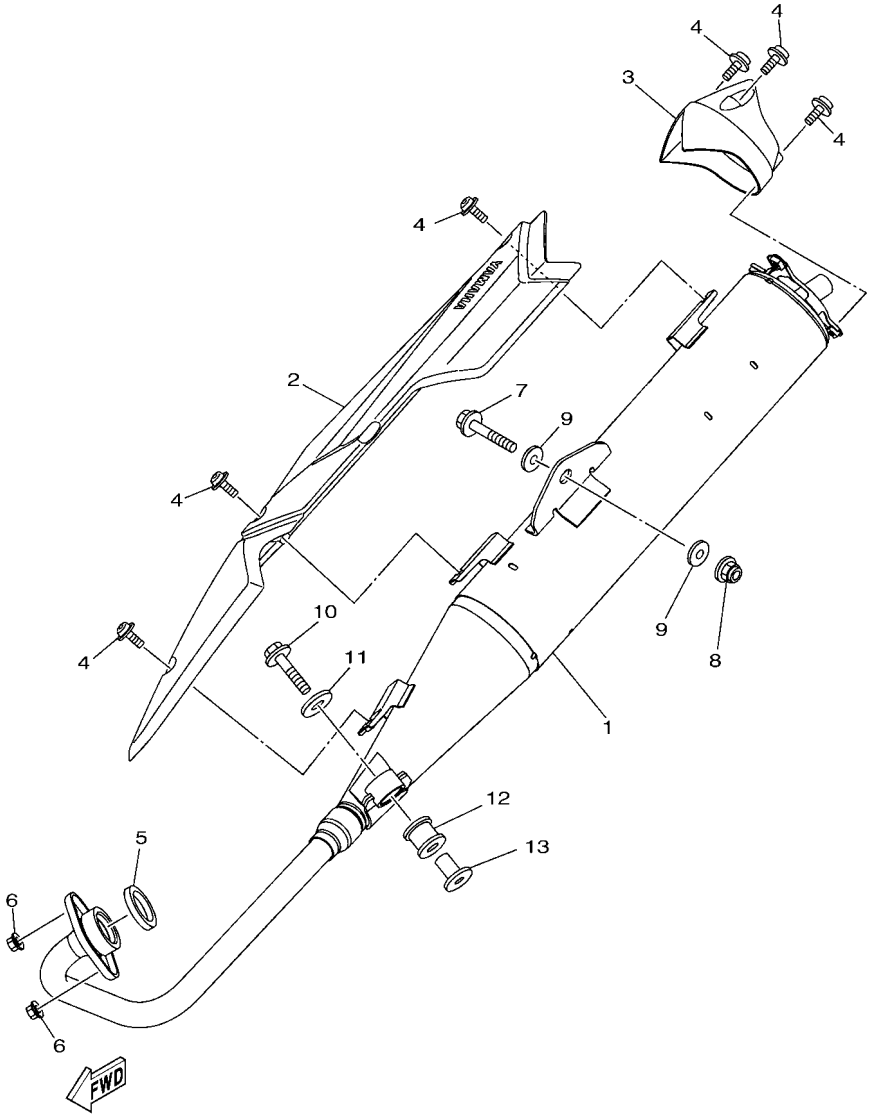

BDK1440-X090

FIG. 9 EXHAUST

REF. NO.	PART NO.	DESCRIPTION	BDK1	BDK2				REMARKS
1	BDK–E4703–00	MUFFLER COMP. 1	1	1				
2	55D–E4718–10	PROTECTOR, MUFFLER 1	1	1				
3	55D–E4799–20	CAP	1	1				
4	90111–06807	BOLT,HEX. SOCKET BUTTON	6	6				
5	1S8–E4613–00	GASKET, EXHAUST PIPE	1	1				
6	95707–08500	NUT, FLANGE	2	2				
7	95827–10045	BOLT, FLANGE	1	1				
8	95707–10500	NUT, FLANGE	1	1				
9	90201–10141	WASHER, PLATE	2	2				
10	95807–08035	BOLT, FLANGE	1	1				
11	90201–08612	WASHER, PLATE	1	1				
12	29B–E4747–00	DAMPER, MUFFLER	1	1				
13	90387–08822	COLLAR	1	1				

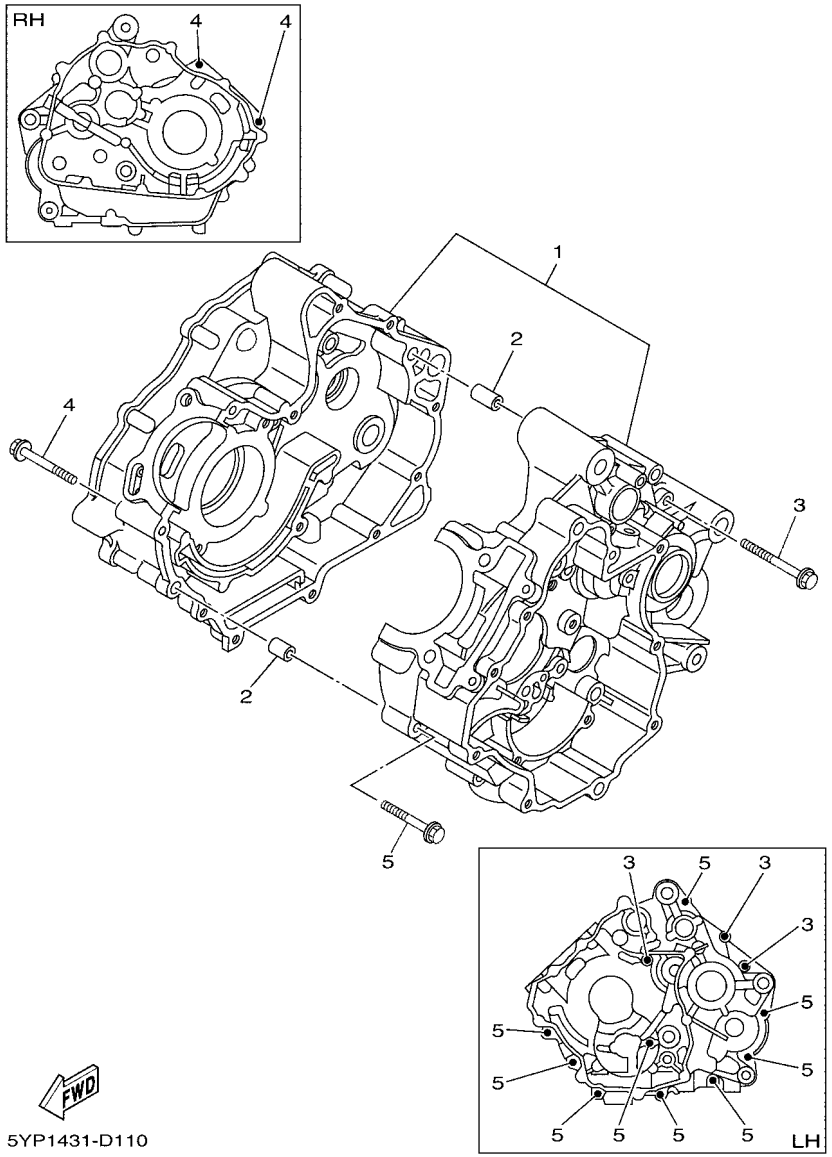

FIG. 10 CRANKCASE

REF. NO.	PART NO.	DESCRIPTION	BDK1	BDK2				REMARKS
1	1S8–E5150–00	CRANKCASE ASSY	1	1				
2	99530–10114	PIN, DOWEL	2	2				
3	95E32–06060	BOLT, FLANGE DEEP RECESS	3	3				
4	95E32–06050	BOLT, FLANGE DEEP RECESS	2	2				
5	95E32–06045	BOLT, FLANGE DEEP RECESS	9	9				

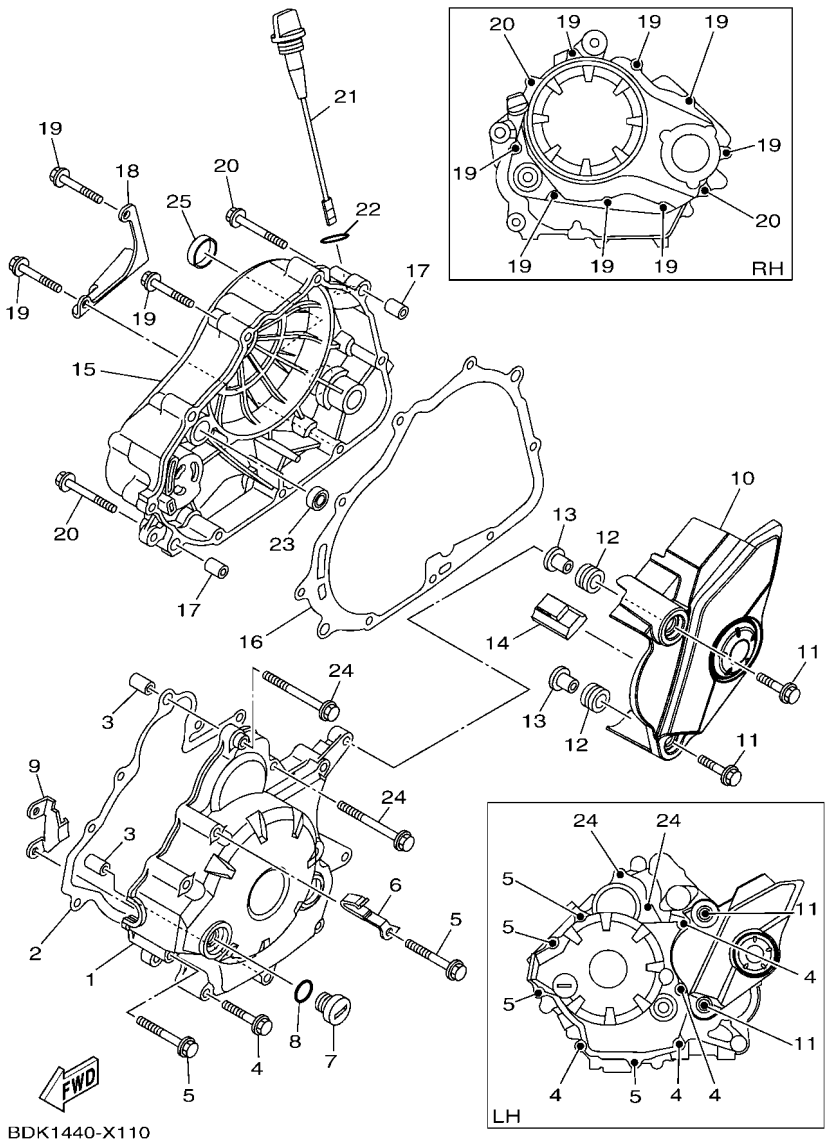

FIG. 11 CRANKCASE COVER 1

REF. NO.	PART NO.	DESCRIPTION	BDK1	BDK2				REMARKS
1	BDK–E5411–00	COVER, CRANKCASE 1	1	1				
2	55D–E5451–00	GASKET, CRANKCASE COVER 1	1	1				
3	99530–10114	PIN, DOWEL	2	2				
4	95E32–06040	BOLT, FLANGE DEEP RECESS	4	4				
5	95E32–06050	BOLT, FLANGE DEEP RECESS	4	4				
6	90462–08817	CLAMP	1	1				
7	90340–14824	PLUG, STRAIGHT SCREW	1	1				
8	93210–14899	O-RING	1	1				
9	5YP–E5113–00	PLATE	1	1				
10	55D–E5418–10	COVER, CHAIN CASE	1	1				
11	95807–06025	BOLT, FLANGE	2	2				
12	90480–13808	GROMMET	2	2				
13	90387–06063	COLLAR	2	2				
14	5YP–E5377–00	GUIDE, INLET	1	1				
15	55D–E5421–00	COVER, CRANKCASE 2	1	1				
16	55D–E5461–00	GASKET, CRANKCASE COVER 2	1	1				
17	99530–10114	PIN, DOWEL	2	2				
18	BDK–E5142–00	GUIDE 1	1	1				
19	95E32–06040	BOLT, FLANGE DEEP RECESS	8	8				
20	95E32–06050	BOLT, FLANGE DEEP RECESS	2	2				
21	1S8–E5362–00	PLUG, OIL LEVEL	1	1				
22	93210–19809	O-RING	1	1				
23	93101–10843	OIL SEAL	1	1				
24	95E32–06060	BOLT, FLANGE DEEP RECESS	2	2				
25	90338–26136	PLUG	1	1				

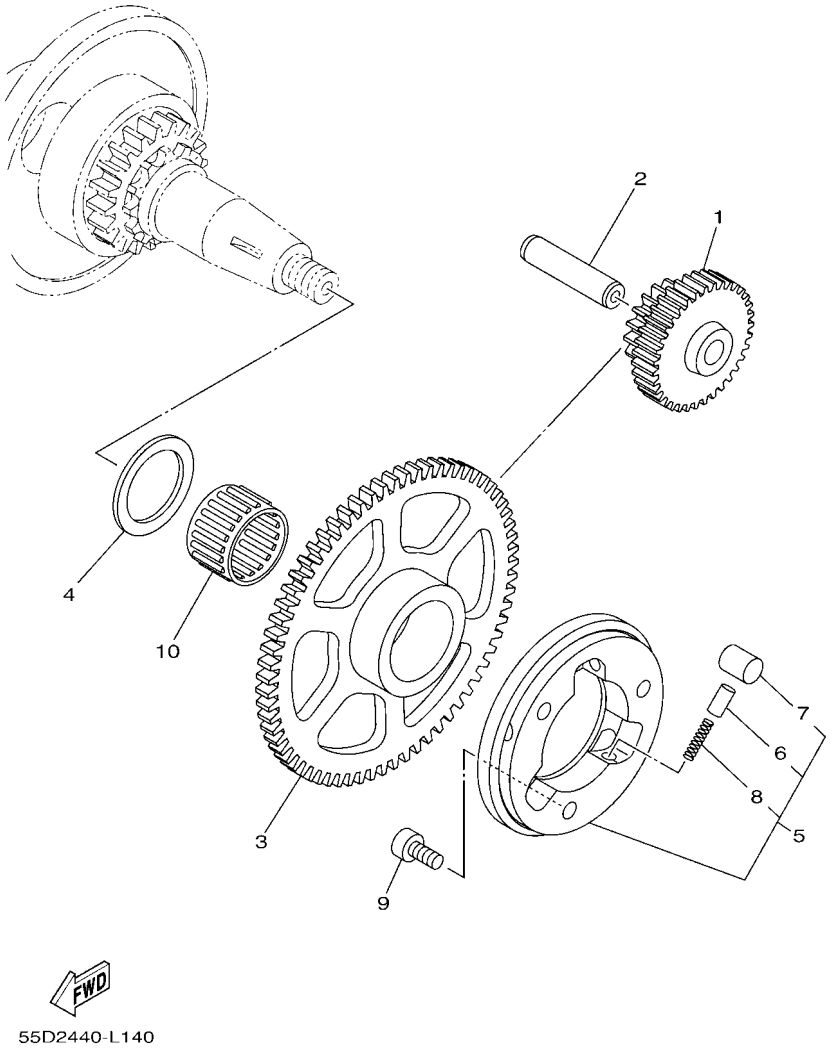

FIG. 12 STARTER CLUTCH

REF. NO.	PART NO.	DESCRIPTION	BDK1	BDK2				REMARKS
1	1S7–E5514–00	GEAR 2	1	1				
2	1S8–E5521–00	SHAFT 1	1	1				
3	55D–E5524–00	WHEEL, STARTER	1	1				
4	90201–25290	WASHER, PLATE	1	1				
5	2PV–E5580–00	STARTER CLUTCH OUTER ASSY	1	1				
6	2PH–E5583–10	.CAP, STARTER CLUTCH SPRING	3	3				
7	1ST–E5614–00	.PIN, DOWEL	3	3				
8	2PV–E5572–00	.SPRING, RETURN	3	3				
9	91312–06014	BOLT, HEXAGON SOCKET HEAD	3	3				
10	93310–325X1	BEARING	1	1				

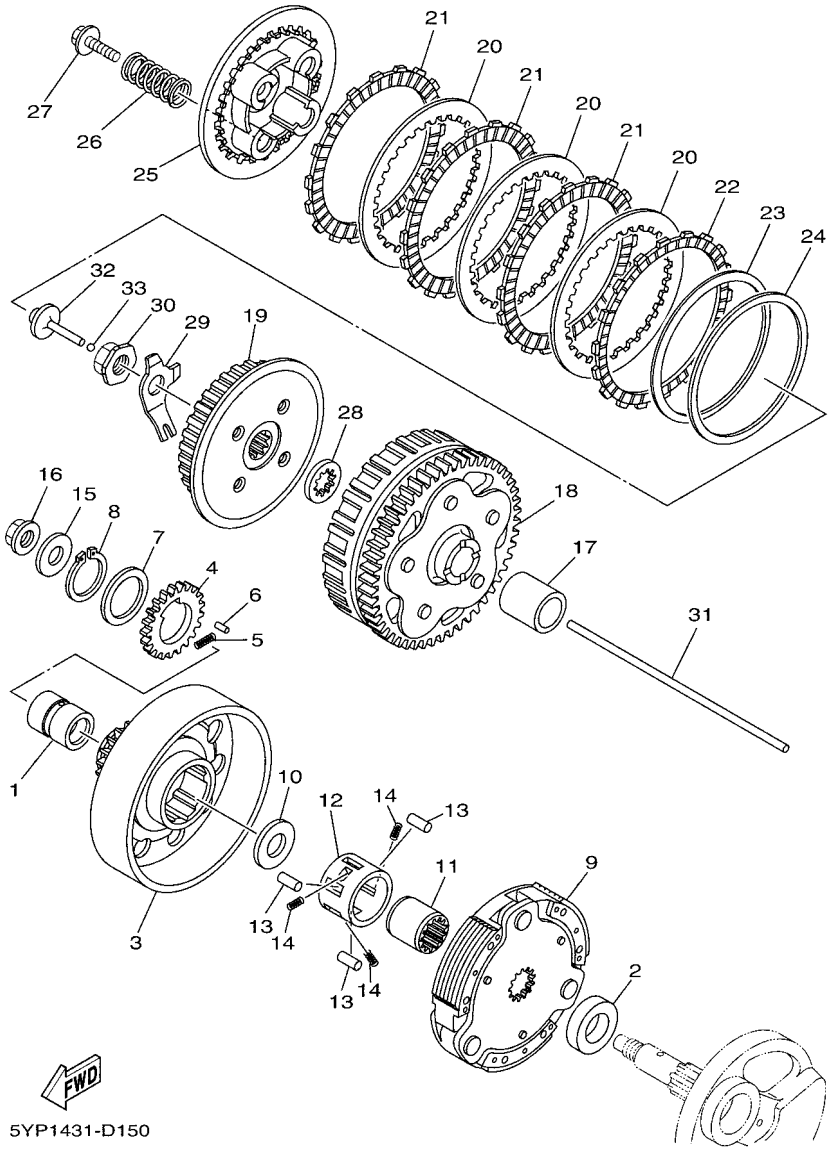

FIG. 13 CLUTCH

REF. NO.	PART NO.	DESCRIPTION	BDK1	BDK2				REMARKS
1	1S7–E6116–00	COLLAR 1	1	1				
2	55D–E6182–00	SPACER 2	1	1				
3	5YP–E6611–00	CLUTCH HOUSING COMP.	1	1				
4	5YP–E6131–00	GEAR, PRIMARY DRIVE 2	1	1				
5	5YP–E6539–00	SPRING	1	1				
6	93602–08810	PIN, DOWEL	1	1				
7	5YP–E6144–00	WASHER	1	1				
8	99009–28400	CIRCLIP	1	1				
9	5YP–E6620–00	CLUTCH CARRIER ASSY	1	1				
10	90201–167P7	WASHER, PLATE	1	1				
11	5YP–E6512–00	BOSS, CLUTCH HOUSING	1	1				
12	5YP–E6586–00	CAGE	1	1				
13	5YP–E6143–00	PIN, ROLLER	3	3				
14	90501–04801	SPRING, COMPRESSION	3	3				
15	90201–12019	WASHER, PLATE	1	1				
16	90179–12659	NUT	1	1				
17	1S8–E6181–00	SPACER 1	1	1				
18	5YP–E6150–00	PRIMARY DRIVEN GEAR COMP.	1	1				
19	5YP–E6371–00	BOSS, CLUTCH	1	1				
20	5YP–E6324–00	PLATE, CLUTCH 1	3	3				
21	5YP–E6321–00	PLATE, FRICTION	3	3				
22	5YP–E6331–00	PLATE, FRICTION 2	1	1				
23	5YP–E6383–00	SPRING.,CUSHION	1	1				
24	5YP–E6384–00	PLATE, SEAT	1	1				
25	5YP–E6351–00	PLATE, PRESSURE 1	1	1				
26	5YP–E6333–00	SPRING, CLUTCH 1	4	4				
27	5YP–E6777–00	BOLT	4	4				

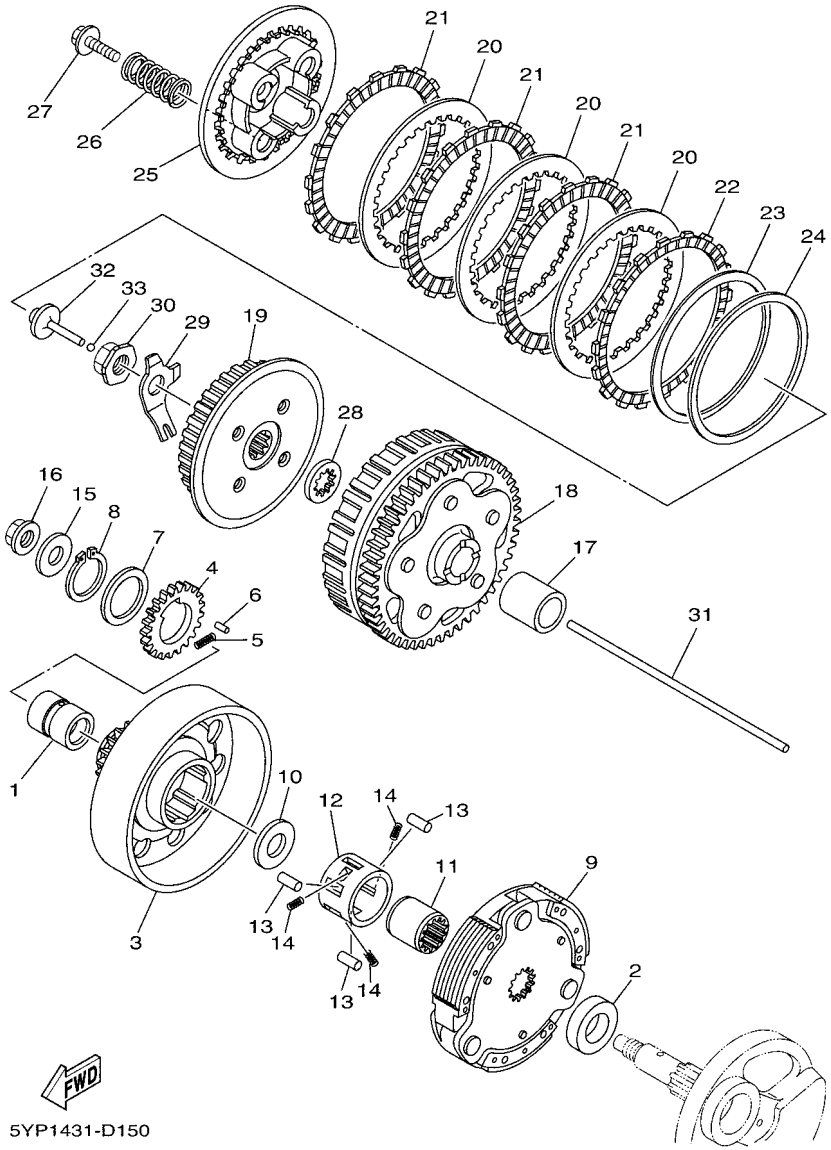

FIG. 13 CLUTCH

REF. NO.	PART NO.	DESCRIPTION	BDK1	BDK2				REMARKS
28	5YP–E6628–00	WASHER	1	1				
29	1S8–E6135–00	WASHER, LOCK	1	1				
30	90179–14001	NUT	1	1				
31	5YP–E6357–00	ROD, PUSH 2	1	1				
32	B6F–E6356–00	ROD, PUSH 1	1	1				
33	93503–16807	BALL	1	1				

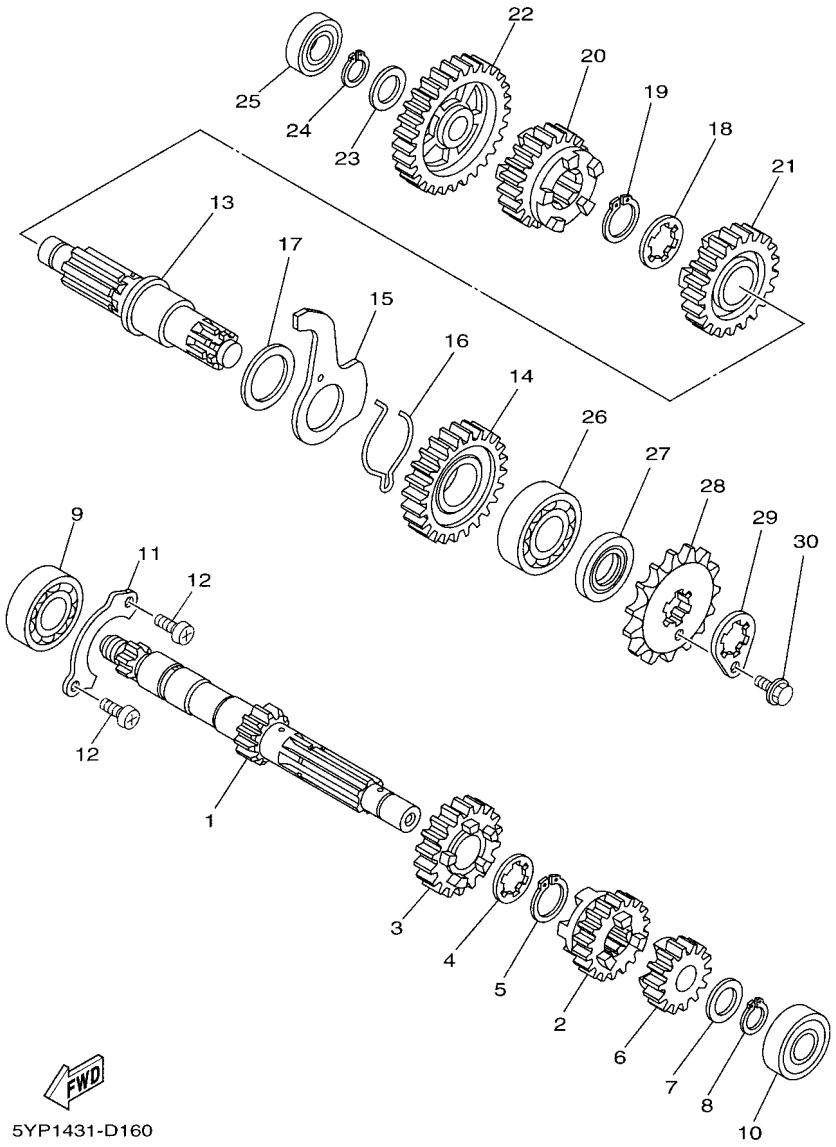

FIG. 14 TRANSMISSION

REF. NO.	PART NO.	DESCRIPTION	BDK1	BDK2				REMARKS
1	5YP–E7411–00	AXLE, MAIN (12T)	1	1				UR
	5YP–E7411–10	AXLE, MAIN (12T)	1	1				UR
2	5YP–E7131–00	GEAR, 3RD PINION (17T)	1	1				
3	5YP–E7141–00	GEAR, 4TH PINION (22T)	1	1				
4	90209–17285	WASHER	1	1				
5	93410–20809	CIRCLIP	1	1				
6	5YP–E7121–00	GEAR, 2ND PINION (16T)	1	1				
7	90201–15700	WASHER, PLATE	1	1				
8	99009–15400	CIRCLIP	1	1				
9	93306–004XR	BEARING	1	1				
10	933A6–202X0	BEARING	1	1				
11	1S8–E7471–00	PLATE, COVER	1	1				
12	98512–06012	SCREW, PAN HEAD	2	2				
13	5YP–E7421–00	AXLE, DRIVE	1	1				
14	5YP–E7221–00	GEAR, 2ND WHEEL (30T)	1	1				
15	5YP–E8561–00	PLATE, SIDE 1	1	1				
16	5TN–E8545–00	SPRING	1	1				
17	90201–26802	WASHER, PLATE	1	1				
18	90209–18208	WASHER	1	1				
19	93410–22820	CIRCLIP	1	1				
20	5YP–E7241–00	GEAR, 4TH WHEEL (23T)	1	1				
21	5YP–E7231–00	GEAR, 3RD WHEEL (23T)	1	1				
22	5YP–E7211–00	GEAR, 1ST WHEEL (34T)	1	1				
23	90201–15700	WASHER, PLATE	1	1				
24	99009–15400	CIRCLIP	1	1				
25	93306–002X8	BEARING	1	1				
26	93306–204X9	BEARING	1	1				

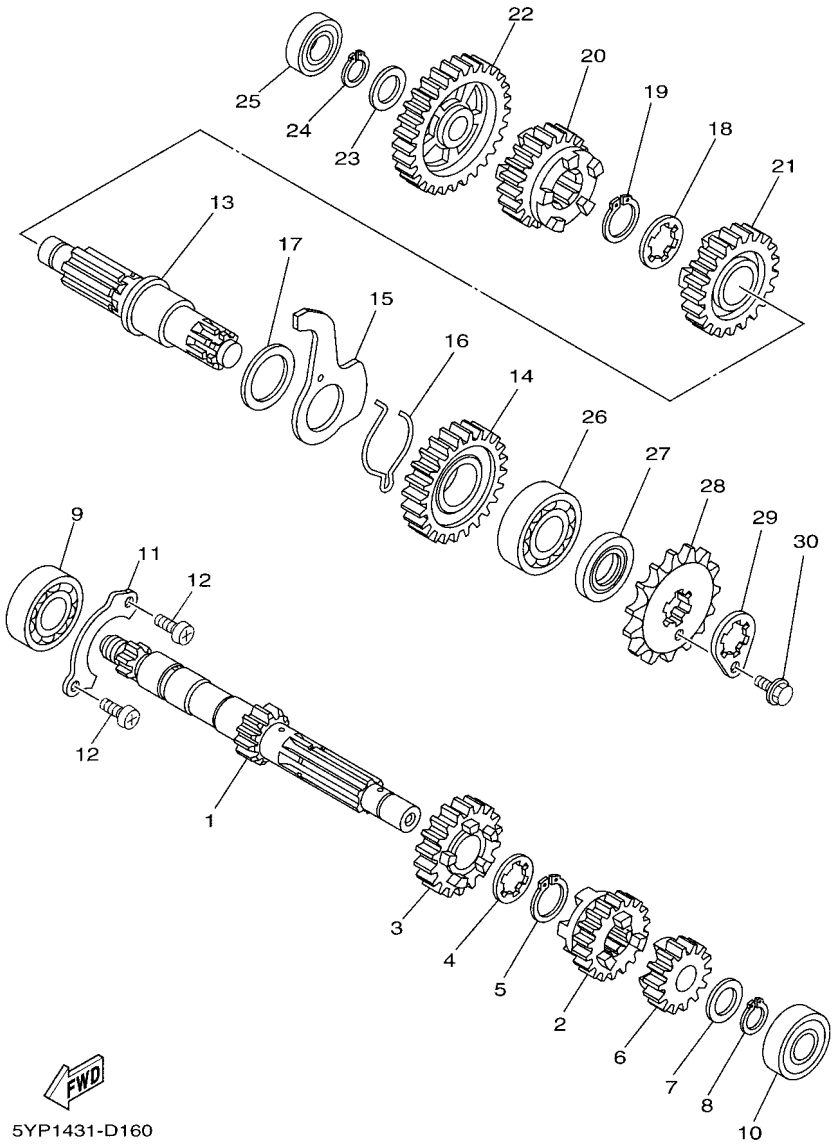

FIG. 14 TRANSMISSION

REF. NO.	PART NO.	DESCRIPTION	BDK1	BDK2				REMARKS
27	93102–20892	OIL SEAL	1	1				
28	93822–15811	SPROCKET, DRIVE (15T)	1	1				
29	1S8–E7456–00	HOLDER, SPROCKET	1	1				
30	95E32–06010	BOLT, FLANGE DEEP RECESS	1	1				

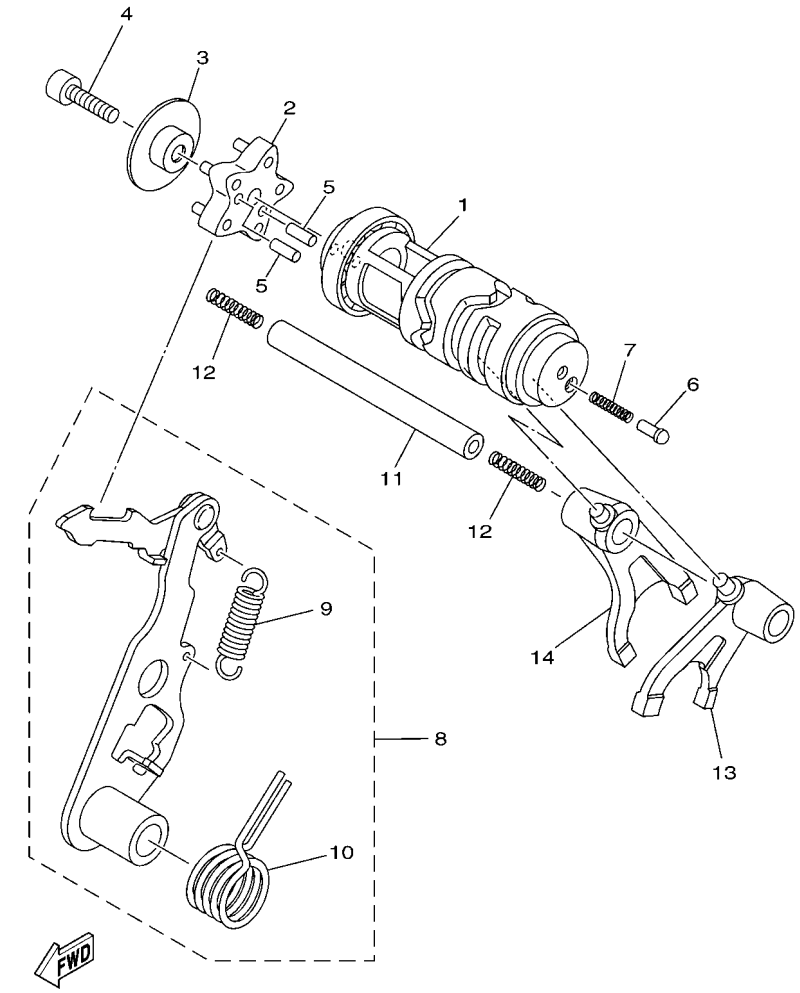

FIG. 15 SHIFT CAM & FORK

REF. NO.	PART NO.	DESCRIPTION	BDK1	BDK2				REMARKS
1	1S7–E8540–10	SHIFT CAM ASSY	1	1				
2	5YP–E8185–00	SEGMENT	1	1				
3	5YP–E8549–00	STOPPER	1	1				
4	91317–06025	BOLT,HEX.SOCKET HEAD	1	1				
5	93604–12831	PIN, DOWEL	2	2				
6	5TP–E8542–00	POINT, NEUTRAL	1	1				
7	90501–06022	SPRING, COMPRESSION	1	1				
8	5YP–E8120–00	SHIFT LEVER ASSY	1	1				
9	5YP–E8123–00	.SPRING	1	1				
10	90508–29007	.SPRING, TORSION	1	1				
11	1S8–E8531–00	BAR, SHIFT FORK GUIDE 1	1	1				
12	90501–06800	SPRING, COMPRESSION	2	2				
13	1S7–E8511–00	FORK, SHIFT 1	1	1				
14	1S7–E8512–00	FORK, SHIFT 2	1	1				

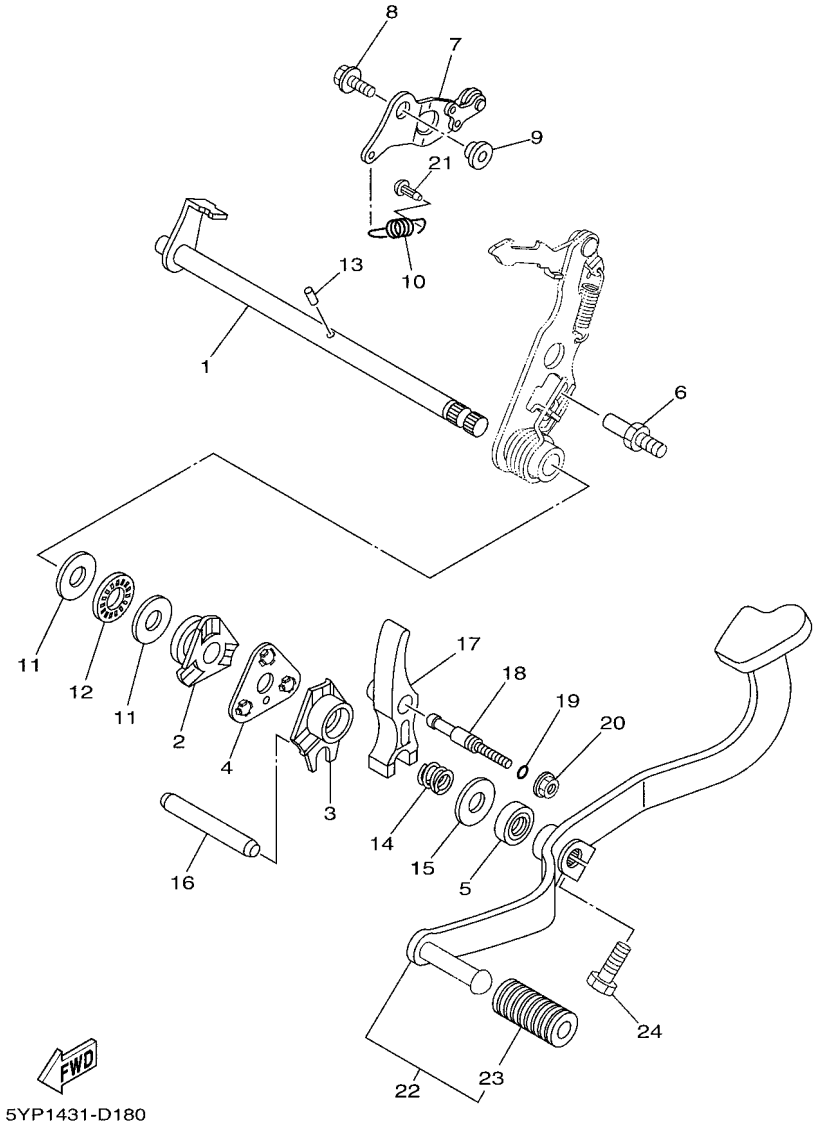

FIG. 16 SHIFT SHAFT

REF. NO.	PART NO.	DESCRIPTION	BDK1	BDK2				REMARKS
1	5YP–E8101–00	SHIFT SHAFT ASSY	1	1				
2	5YP–E8179–00	GUIDE	1	1				
3	5YP–E8172–00	GUIDE, SHIFT	1	1				
4	5YP–E8181–00	HOLDER, PAWL	1	1				
5	93102–12891	OIL SEAL	1	1				
6	1S7–E8127–00	STOPPER, SCREW	1	1				
7	5YP–E8140–00	STOPPER LEVER ASSY	1	1				
8	95827–06014	BOLT, FLANGE	1	1				
9	1S7–E8175–00	SPACER	1	1				
10	1S7–E8337–00	SPRING	1	1				
11	90201–12817	WASHER, PLATE	2	2				
12	93340–212Y2	BEARING	1	1				
13	93604–10837	PIN, DOWEL	1	1				
14	90501–125E9	SPRING, COMPRESSION	1	1				
15	90201–126A7	WASHER, PLATE	1	1				
16	1S8–E8173–00	PIN, SHIFT	1	1				
17	1S8–E817A–00	ARM, SHIFT 3	1	1				
18	BDK–E8186–00	SCREW, ADJUSTING	1	1				
19	93210–068E9	O-RING	1	1				
20	95707–06500	NUT, FLANGE	1	1				
21	5HV–E6346–00	HOOK, SPRING	1	1				
22	55D–E8110–10	SHIFT PEDAL ASSY	1	1				
23	5H3–E8113–00	.COVER, SHIFT PEDAL	1	1				
24	97027–08020	BOLT, HEXAGON	1	1				

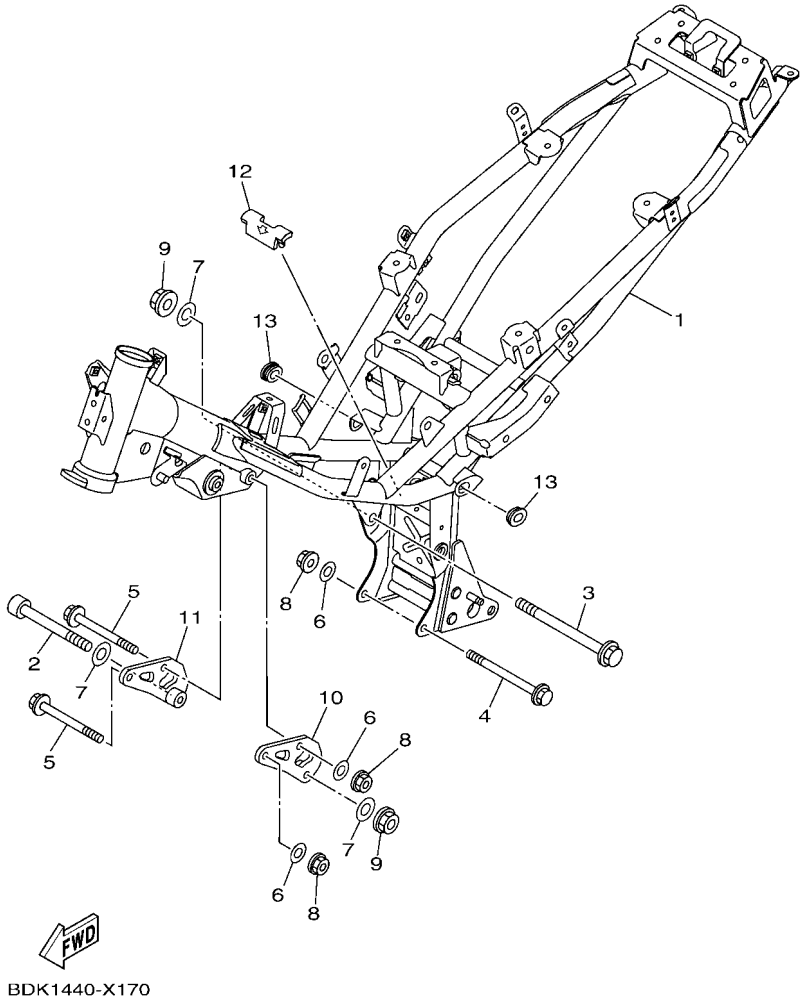

FIG. 17 FRAME

REF. NO.	PART NO.	DESCRIPTION	BDK1	BDK2				REMARKS
1	BDK–F1110–00	FRAME COMP.	1	1				
2	91312–10100	BOLT, HEXAGON SOCKET HEAD	1	1				
3	90105–10861	BOLT, FLANGE	1	1				
4	90105–088D9	BOLT, FLANGE	1	1				
5	90105–088D8	BOLT, FLANGE	2	2				
6	90201–08804	WASHER, PLATE	3	3				
7	90201–10035	WASHER, PLATE	3	3				
8	90179–08818	NUT	3	3				
9	90179–10024	NUT	2	2				
10	1S8–F1315–00	STAY, ENGINE 1	1	1				
11	1S8–F1316–00	STAY, ENGINE 2	1	1				
12	1S8–F139X–00	DAMPER	1	1				
13	90480–01868	GROMMET	2	2				

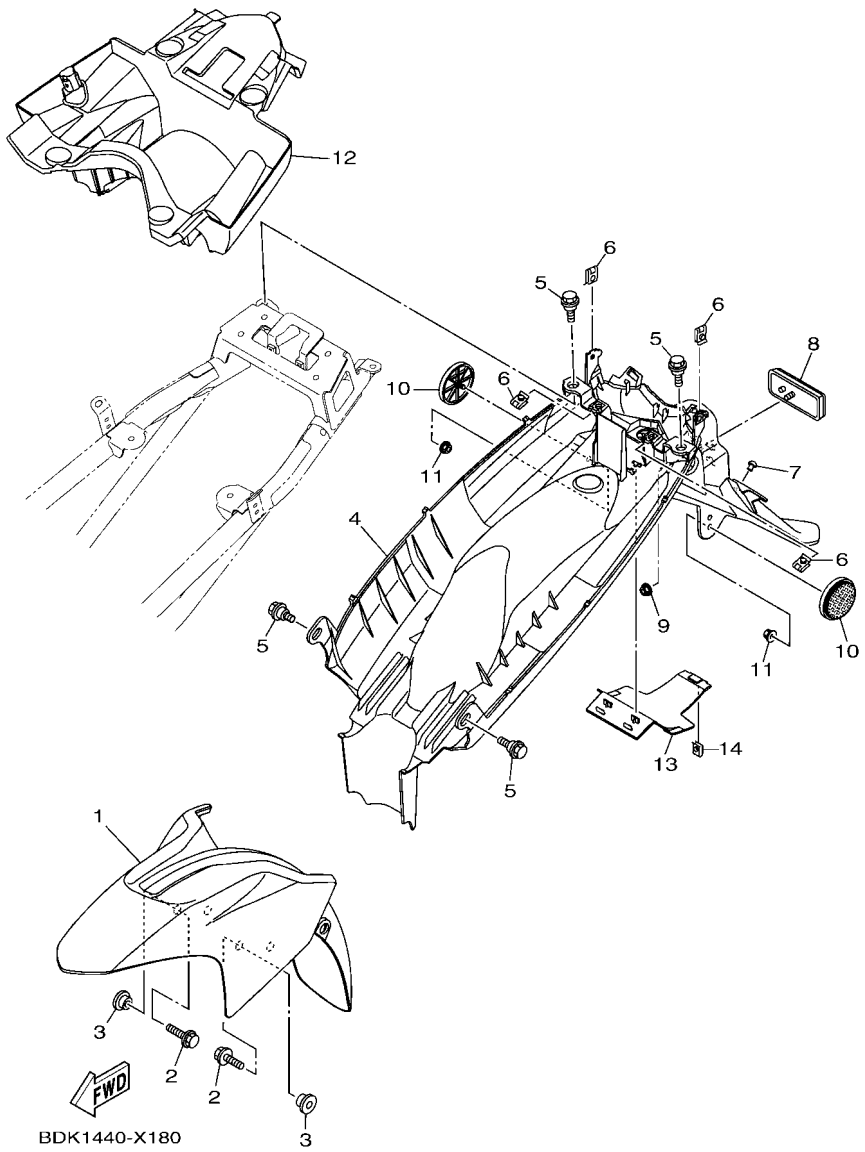

FIG. 18 FENDER

REF. NO.	PART NO.	DESCRIPTION	BDK1	BDK2				REMARKS
1	55C–F1511–10–P1	FENDER, FRONT	1					UR FOR VRC1
	55C–F1511–10–P2	FENDER, FRONT	1					UR FOR CM6
	55C–F1511–10–P3	FENDER, FRONT	1					UR FOR DNPM1
	55C–F1511–10–P0	FENDER, FRONT		1				MDNMA
2	90119–068B7	BOLT, WITH WASHER	4	4				
3	90387–06804	COLLAR	4	4				
4	BDK–F1611–00	FENDER, REAR	1	1				
5	90109–06220	BOLT	4	4				
6	90183–05807	NUT, SPRING	4	4				
7	21C–F1717–00	DAMPER	1	1				
8	5US–H5110–01	REFLECTOR ASSY	1	1				
9	95707–05500	NUT, FLANGE	1	1				
10	2FC–H5111–00	REFLECTOR, 1	2	2				
11	90185–05803	NUT, SELF-LOCKING	2	2				
12	BDK–F160E–00	BOX	1	1				
13	BDK–F163A–00	COVER, REAR FENDER 1	1	1				
14	90183–04039	NUT, SPRING	1	1				

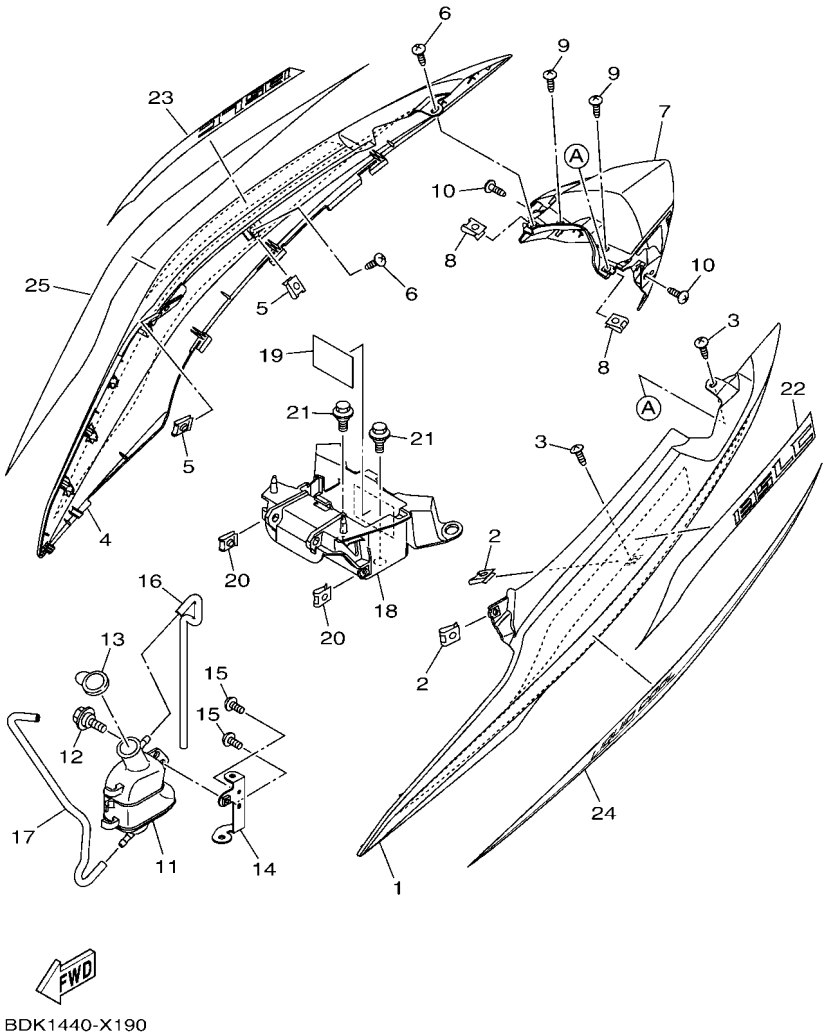

FIG. 19 SIDE COVER

REF. NO.	PART NO.	DESCRIPTION	BDK1	BDK2				REMARKS
1	BDK–F1711–00–P1	COVER, SIDE 1	1					DNMG FOR VRC1
	BDK–F1711–00–P2	COVER, SIDE 1	1					FOR CM6
	BDK–F1711–00–P3	COVER, SIDE 1	1					DBNM8 FOR DNPM1
2	90183–05807	NUT, SPRING	2					
3	97707–50012	SCREW, TRUSS HEAD TAPPING	2					
4	BDK–F1721–00–P1	COVER, SIDE 2	1					DNMG FOR VRC1
	BDK–F1721–00–P2	COVER, SIDE 2	1					FOR CM6
	BDK–F1721–00–P3	COVER, SIDE 2	1					DBNM8 FOR DNPM1
5	90183–05807	NUT, SPRING	2					
6	97707–50012	SCREW, TRUSS HEAD TAPPING	2					
7	BDK–F171E–00	COVER, SIDE 5	1					
8	90183–05807	NUT, SPRING	2					
9	97707–50012	SCREW, TRUSS HEAD TAPPING	2					
10	97702–50012	SCREW, TAPPING	2					
11	B5V–F1871–00	TANK, RECOVERY	1					
12	90109–068B4	BOLT	1					
13	5YP–F1875–01	CAP	1					
14	BDK–F1873–00	BRACKET, RECOVERY TANK	1					
15	98517–05010	SCREW, PAN HEAD	2					
16	BDK–F1816–00	PIPE 1	1					
17	BDK–F1817–00	PIPE 2	1					
18	BDK–F177G–00	BOX, BATTERY	1					
19	90520–02807	DAMPER, PLATE	1					
20	90183–05807	NUT, SPRING	2					
21	90109–068B4	BOLT	2					
22	BDK–F173E–00	GRAPHIC 1	1					UR FOR VRC1
	BDK–F173E–10	GRAPHIC 1	1					UR FOR CM6

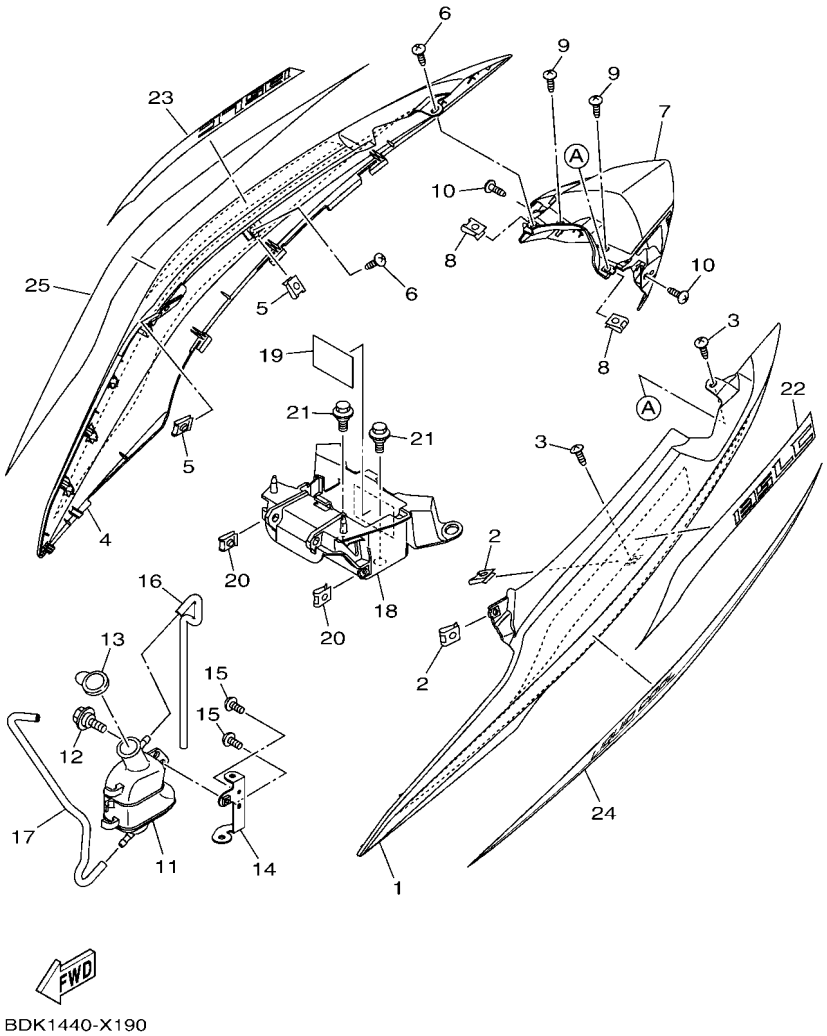

BDK1440-X190

FIG. 19 SIDE COVER

REF. NO.	PART NO.	DESCRIPTION	BDK1	BDK2				REMARKS
22	BDK–F173E–20	GRAPHIC 1	1					UR FOR DNPM1
23	BDK–F173F–00	GRAPHIC 2	1					UR FOR VRC1
	BDK–F173F–10	GRAPHIC 2	1					UR FOR CM6
	BDK–F173F–20	GRAPHIC 2	1					UR FOR DNPM1
24	BDK–F174G–00	GRAPHIC 3	1					UR FOR VRC1
	BDK–F174G–10	GRAPHIC 3	1					UR FOR CM6
	BDK–F174G–20	GRAPHIC 3	1					UR FOR DNPM1
25	BDK–F174H–00	GRAPHIC 4	1					UR FOR VRC1
	BDK–F174H–10	GRAPHIC 4	1					UR FOR CM6
	BDK–F174H–20	GRAPHIC 4	1					UR FOR DNPM1

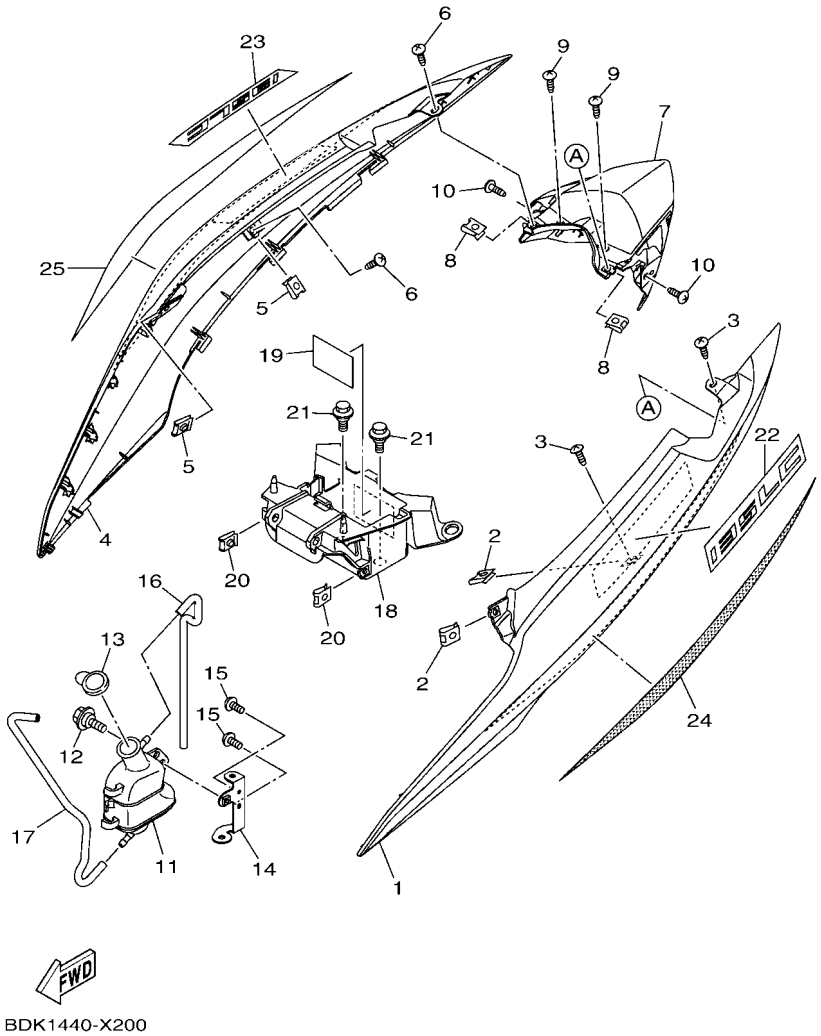

FIG. 20 SIDE COVER 2

REF. NO.	PART NO.	DESCRIPTION	BDK1	BDK2				REMARKS
1	BDK–F1711–00–P0	COVER, SIDE 1		1				MDNMA
2	90183–05807	NUT, SPRING		2				
3	97707–50012	SCREW, TRUSS HEAD TAPPING		2				
4	BDK–F1721–00–P0	COVER, SIDE 2		1				MDNMA
5	90183–05807	NUT, SPRING		2				
6	97707–50012	SCREW, TRUSS HEAD TAPPING		2				
7	BDK–F171E–00	COVER, SIDE 5		1				
8	90183–05807	NUT, SPRING		2				
9	97707–50012	SCREW, TRUSS HEAD TAPPING		2				
10	97702–50012	SCREW, TAPPING		2				
11	B5V–F1871–00	TANK, RECOVERY		1				
12	90109–068B4	BOLT		1				
13	5YP–F1875–01	CAP		1				
14	BDK–F1873–00	BRACKET, RECOVERY TANK		1				
15	98517–05010	SCREW, PAN HEAD		2				
16	BDK–F1816–00	PIPE 1		1				
17	BDK–F1817–00	PIPE 2		1				
18	BDK–F177G–00	BOX, BATTERY		1				
19	90520–02807	DAMPER, PLATE		1				
20	90183–05807	NUT, SPRING		2				
21	90109–068B4	BOLT		2				
22	BDK–F173B–00	EMBLEM 3D		1				
23	BDK–F173B–00	EMBLEM 3D		1				
24	BDK–F174G–30	GRAPHIC 3		1				
25	BDK–F174H–30	GRAPHIC 4		1				

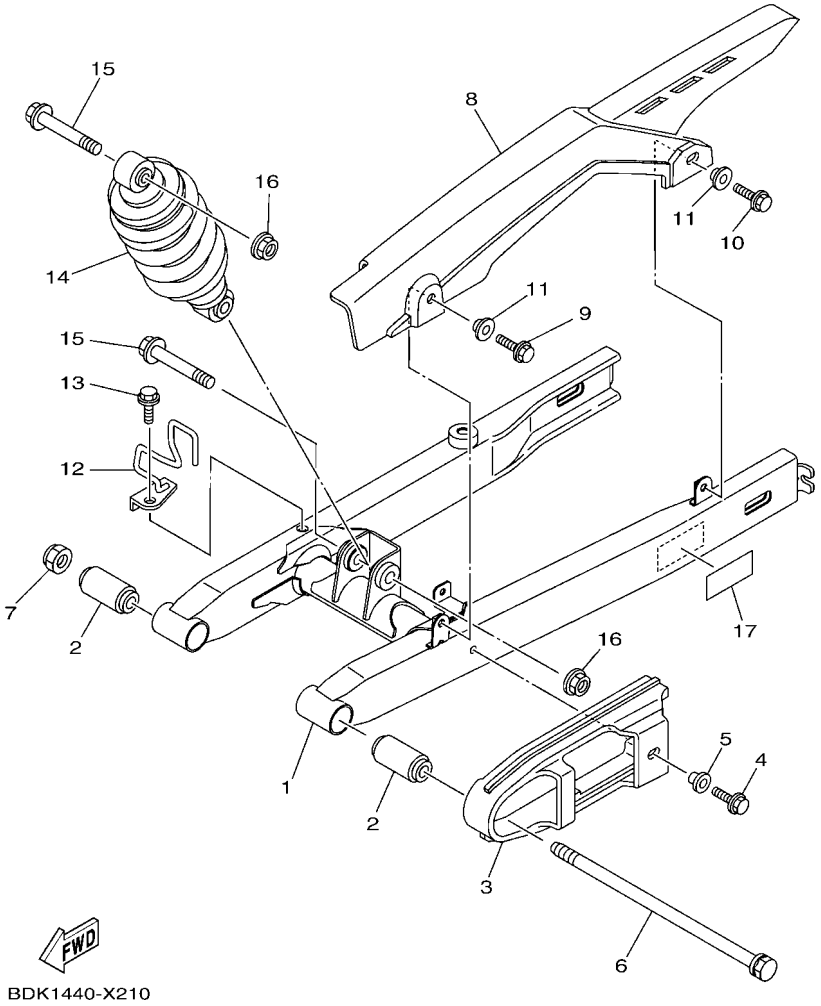

FIG. 21 REAR ARM & SUSPENSION

REF. NO.	PART NO.	DESCRIPTION	BDK1	BDK2				REMARKS
1	BDK–F2110–00	REAR ARM COMP.	1	1				
2	5B9–F2123–00	BUSH 1	2	2				
3	1S8–F2151–00	SEAL, GUARD	1	1				
4	95D02–06012	BOLT, FLANGE DEEP RECESS	1	1				
5	90387–06857	COLLAR	1	1				
6	BDK–F2141–00	SHAFT, PIVOT	1	1				
7	95612–12100	NUT, U	1	1				
8	1S8–F2311–00	CASE, CHAIN	1	1				
9	95D32–06014	BOLT, FLANGE DEEP RECESS	1	1				
10	90105–068D6	BOLT, FLANGE	1	1				
11	90387–09803	COLLAR	2	2				
12	50C–F5887–00	HOLDER, BRAKE HOSE 3	1	1				
13	95D32–06010	BOLT, FLANGE DEEP RECESS	1	1				
14	BDK–F2210–00	SHOCK ABSORBER ASSY, REAR	1	1				
15	90105–10855	BOLT, FLANGE	2	2				
16	95602–10200	NUT, S/L FLANGE	2	2				
17	BDK–F1668–00	LABEL, TIRE	1	1				

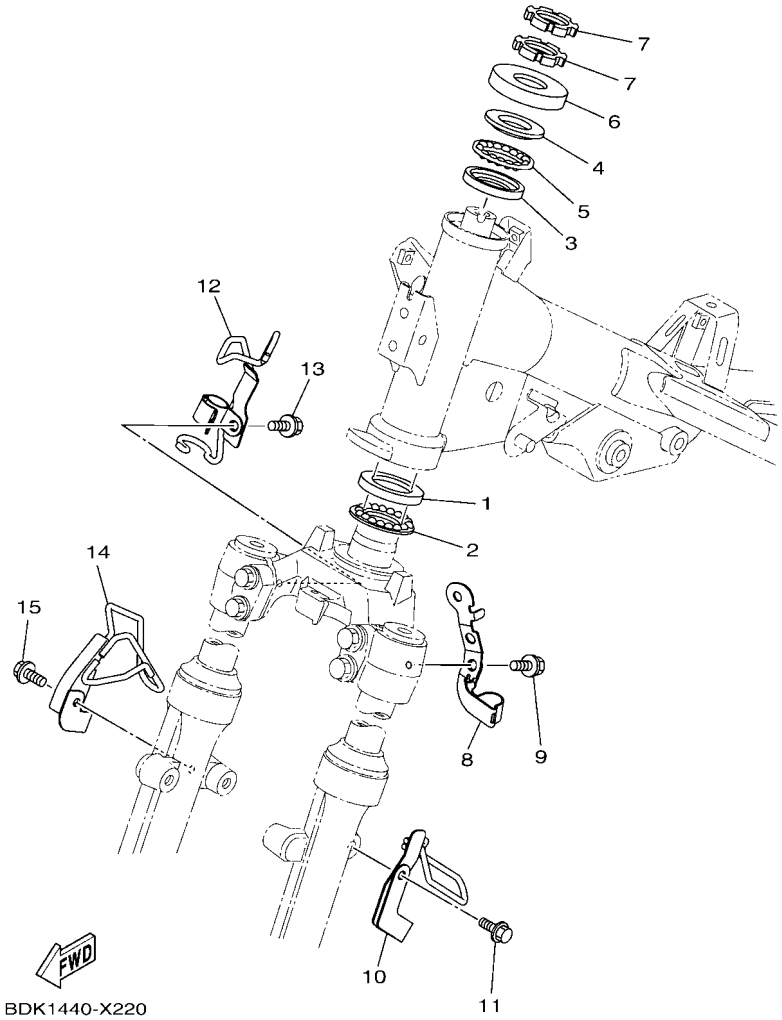

FIG. 22 STEERING

REF. NO.	PART NO.	DESCRIPTION	BDK1	BDK2				REMARKS
1	1KL–F3412–10	RACE, BALL 2	1	1				
2	5VL–F341E–10	RETAINER, BALL BEARING	1	1				
3	4RT–F3412–10	RACE, BALL 2	1	1				
4	4RT–F3411–10	RACE, BALL 1	1	1				
5	1P6–F341E–10	RETAINER, BALL BEARING	1	1				
6	5TL–F3416–01	COVER, BALL RACE 2	1	1				
7	90179–25002	NUT	2	2				
8	BDK–F3857–00	HOLDER	1	1				
9	95D02–06012	BOLT, FLANGE DEEP RECESS	1	1				
10	BDK–F3867–00	HOLDER 2	1	1				
11	95D02–06012	BOLT, FLANGE DEEP RECESS	1	1				
12	BDK–F5875–00	HOLDER, BRAKE HOSE 1	1	1				
13	95D02–06012	BOLT, FLANGE DEEP RECESS	1	1				
14	BDK–F5876–00	HOLDER, BRAKE HOSE 2	1	1				
15	95D02–06012	BOLT, FLANGE DEEP RECESS	1	1				

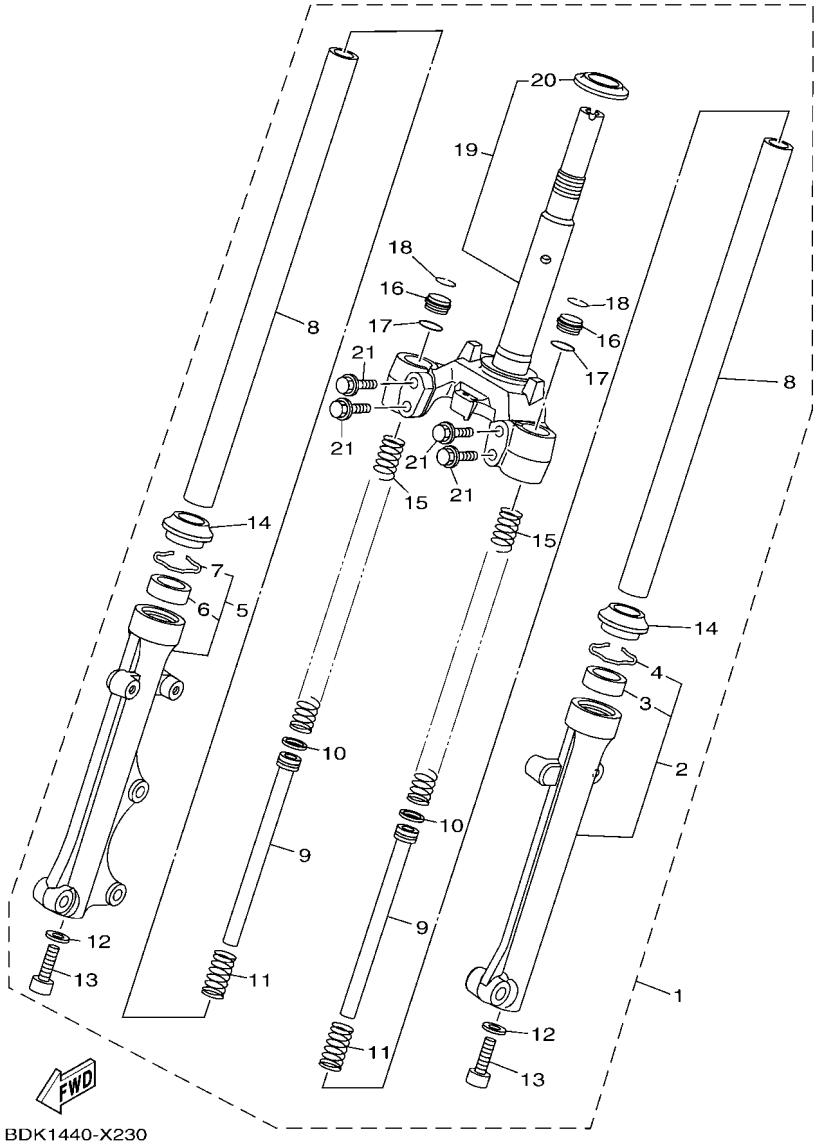

FIG. 23 FRONT FORK

REF. NO.	PART NO.	DESCRIPTION	BDK1	BDK2				REMARKS
1	BDK–F3100–00	FRONT FORK ASSY	1	1				
2	BDK–F3126–00	.TUBE, OUTER (L.H)	1	1				
3	4UV–F3145–00	..OIL SEAL	1	1				
4	5P0–F3156–00	..RING, SNAP	1	1				
5	BDK–F3136–00	.TUBE, OUTER 2	1	1				
6	4UV–F3145–00	..OIL SEAL	1	1				
7	5P0–F3156–00	..RING, SNAP	1	1				
8	2ND–F3110–00	.INNER TUBE COMP.1	2	2				
9	5P2–F3170–00	.CYLINDER COMP., FRONT FORK	2	2				
10	2ND–F3157–00	.RING, PISTON	2	2				
11	5TF–F3152–00	.SPRING, SUB	2	2				
12	509–F3158–L0	.GASKET	2	2				
13	31D–F3181–50	.BOLT, HEXAGON SOCKET HEAD	2	2				
14	5LL–F3144–00	.SEAL, DUST	2	2				
15	BDK–F3141–00	.SPRING, FRONT FORK	2	2				
16	1FC–F3111–10	.BOLT, CAP	2	2				
17	2JG–F3147–00	.O-RING	2	2				
18	5P0–F3153–00	.RING, SNAP	2	2				
19	BDK–F3340–00	.UNDER BRACKET COMP.	1	1				
20	4FP–F3411–10	..RACE, BALL 1	1	1				
21	31B–F3346–00	.BOLT 1	4	4				

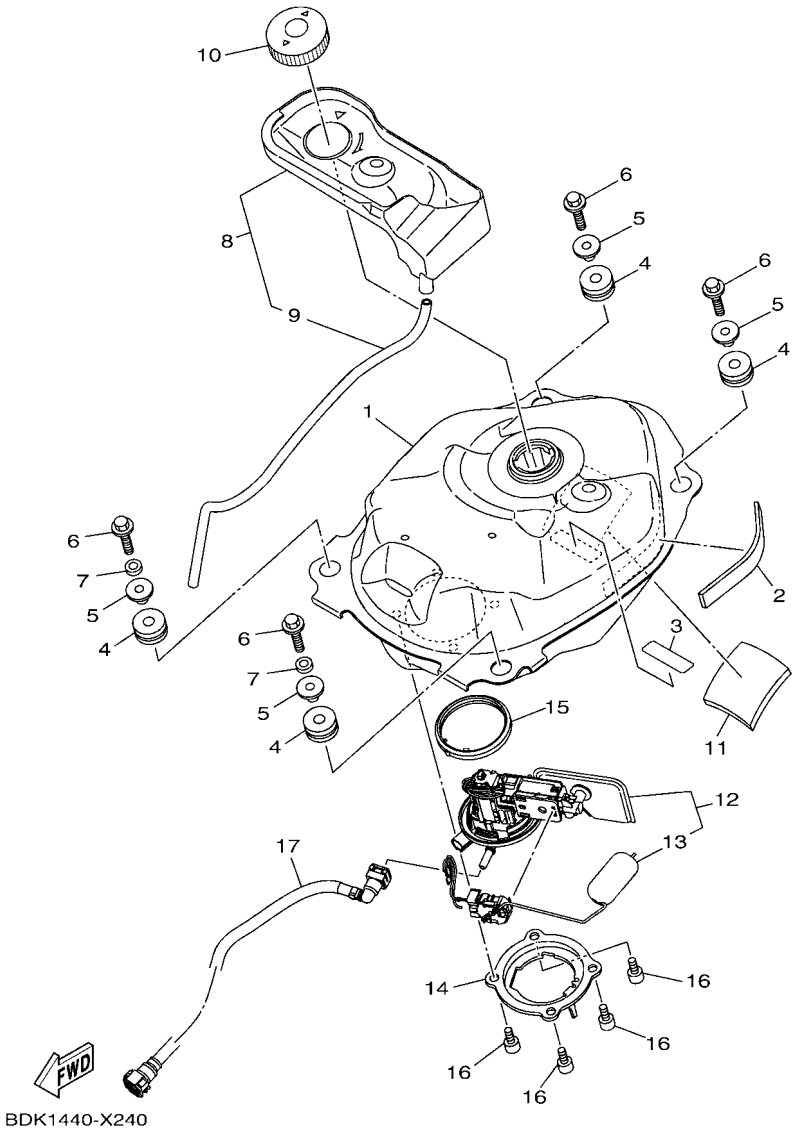

FIG. 24 FUEL TANK

REF. NO.	PART NO.	DESCRIPTION	BDK1	BDK2				REMARKS
1	BDK–F4110–00	FUEL TANK COMP.	1	1				
2	90520–02818	DAMPER, PLATE	1	1				
3	BK6–F414E–00	SEAL 2	1	1				
4	90480–18814	GROMMET	4	4				
5	1S9–F4638–01	COLLAR	4	4				
6	90119–06262	BOLT, WITH WASHER	4	4				
7	90560–08326	SPACER	2	2				
8	BDK–F41B1–00	COVER, TANK	1	1				
9	91A20–05045	.TUBE, FLEXIBLE VINYL	1	1				
10	4YY–F4610–00	CAP ASSY	1	1				
11	1S8–F8372–00	DAMPER	1	1				
12	BDK–E3907–00	FUEL PUMP COMP.	1	1				
13	BDK–H5752–00	.SENDER UNIT ASSY, FUEL METER	1	1				
14	BDK–F4491–00	BRACKET, FUEL PUMP	1	1				
15	1DB–F414G–01	SEAL	1	1				
16	91332–05010	BOLT	4	4				
17	BDK–E3971–00	PIPE, FUEL 1	1	1				

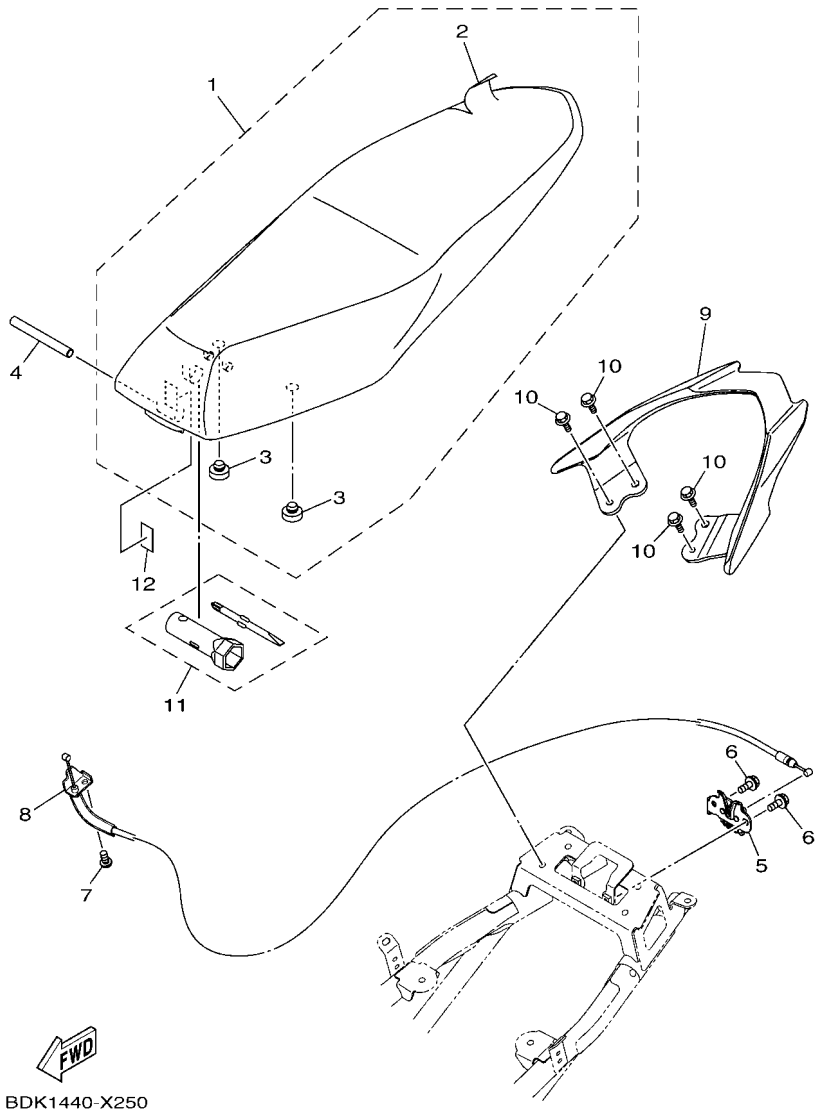

FIG. 25 SEAT

REF. NO.	PART NO.	DESCRIPTION	BDK1	BDK2				REMARKS
1	BDK–F4730–10	DOUBLE SEAT ASSY	1					FOR VRC1
	BDK–F4730–00	DOUBLE SEAT ASSY	1	1				FOR CM6,DNPM1 (BDK1)
2	BDK–F470F–10	.SEAT COVER COMP.	1					FOR VRC1
	BDK–F470F–00	.SEAT COVER COMP.	1	1				FOR CM6,DNPM1 (BDK1)
3	4HF–F4741–00	.PAD, SEAT	2	2				
4	2WB–F4727–00	PIN, SEAT FITTING	1	1				
5	B5V–F4780–10	SEAT LOCK ASSY	1	1				
6	95E32–06012	BOLT, FLANGE DEEP RECESS	2	2				
7	97527–05512	BOLT, WITH WASHER	1	1				
8	BDK–F478E–00	CABLE, SEAT LOCK	1	1				
9	B17–F4773–00–P2	HANDLE, SEAT	1					FOR DNPM1
	B17–F4773–00–P5	HANDLE, SEAT	1	1				SMX FOR VRC1,DNPM1(BDK1)
10	95D32–06020	BOLT, FLANGE DEEP RECESS	4	4				
11	BDK–F8100–00	TOOL KIT	1	1				
12	55C–F815P–00	LABEL, NOTICE 1	1	1				

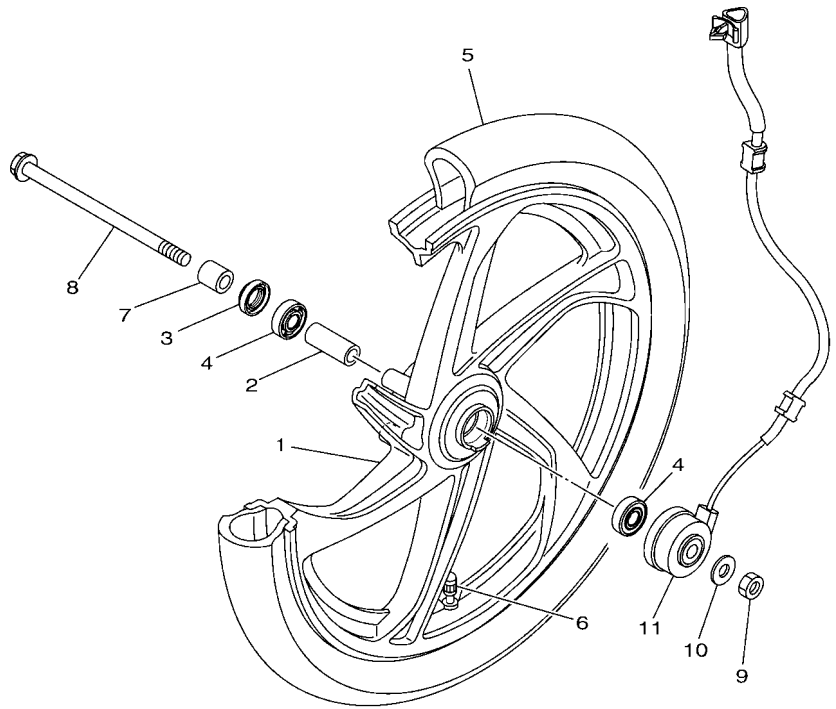

BDK1440-X260

FIG. 26 FRONT WHEEL

REF. NO.	PART NO.	DESCRIPTION	BDK1	BDK2				REMARKS
1	BDK–F5168–00–33	CAST WHEEL, FRONT	1					YB
	BDK–F5168–00–P0	CAST WHEEL, FRONT		1				MDOM2
2	90560–10292	SPACER	1	1				
3	93106–20816	OIL SEAL	1	1				
4	93306–300YF	BEARING	2	2				
5	94107–17873	TIRE(70/90-17M/C 38P V421F TL)	1	1				VEE RUBBER
6	93900–00817	VALVE, RIM (TR412)	1	1				
7	90387–10828	COLLAR	1	1				
8	3NA–F5181–01	AXLE, WHEEL	1	1				
9	90185–10022	NUT, SELF-LOCKING	1	1				
10	90201–10035	WASHER, PLATE	1	1				
11	BDK–H3755–00	SENSOR, SPEED	1	1				

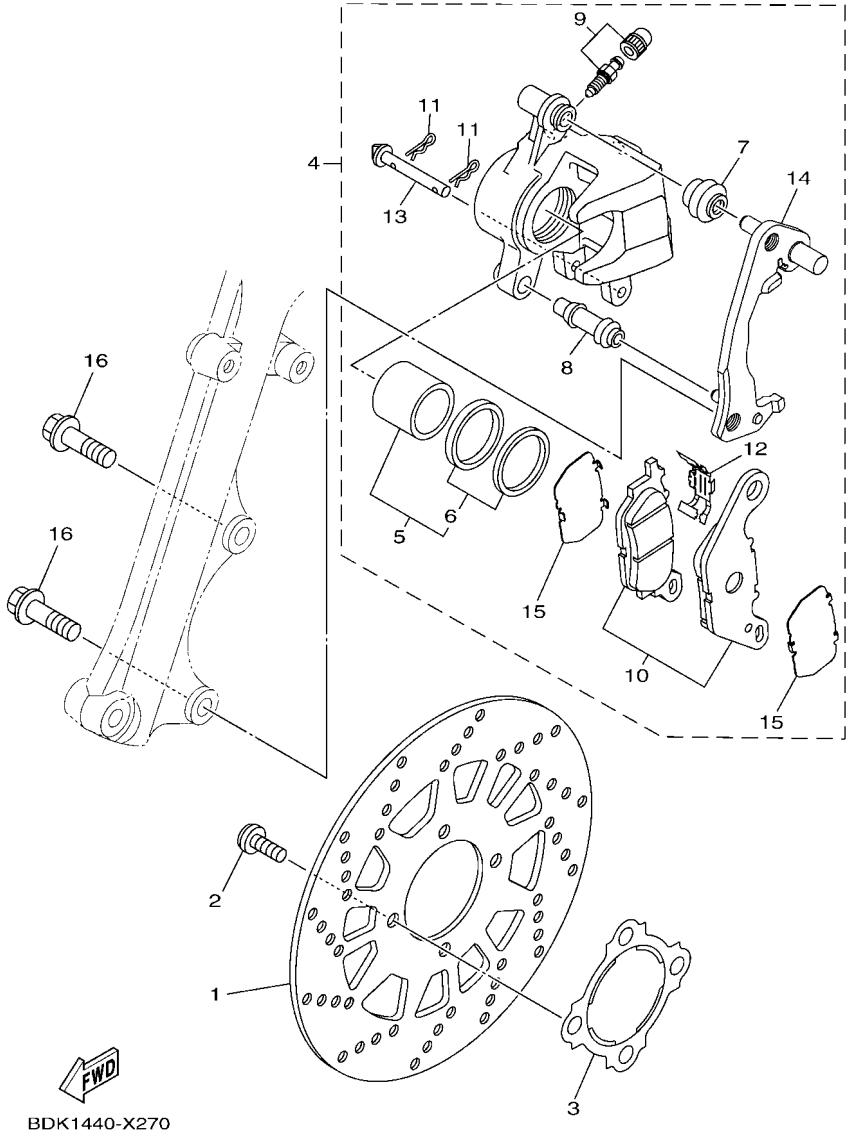

FIG. 27 FRONT BRAKE CALIPER

REF. NO.	PART NO.	DESCRIPTION	BDK1	BDK2				REMARKS
1	1FC–F582U–21	DISK, BRAKE (RIGHT)	1	1				
2	90111–08815	BOLT,HEX. SOCKET BUTTON	4	4				
3	1DY–F518A–10	PLATE, FITTING	1	1				
4	BDK–F580U–00	CALIPER ASSY (RIGHT)	1	1				
5	2BM–F5802–00	.PISTON ASSY, CALIPER	1	1				
6	5YP–F5803–50	..CALIPER SEAL KIT	1	1				
7	2BM–F5917–00	.BOOT, CALIPER	1	1				
8	5YP–F5937–00	.BOOT 2	1	1				
9	4C9–W0048–00	.BLEED SCREW KIT	1	1				
10	2BM–F5805–00	.BRAKE PAD KIT	1	1				
11	5YP–F5925–01	.CLIP	2	2				
12	2BM–F5919–00	.SUPPORT, PAD	1	1				
13	5YP–F5924–00	.PIN, PAD	1	1				
14	2BM–F5920–00	.SUPPORT BRACKET ASSY	1	1				
15	B8A–F5827–00	.SHIM, CALIPER	2	2				
16	90105–10831	BOLT, FLANGE	2	2				

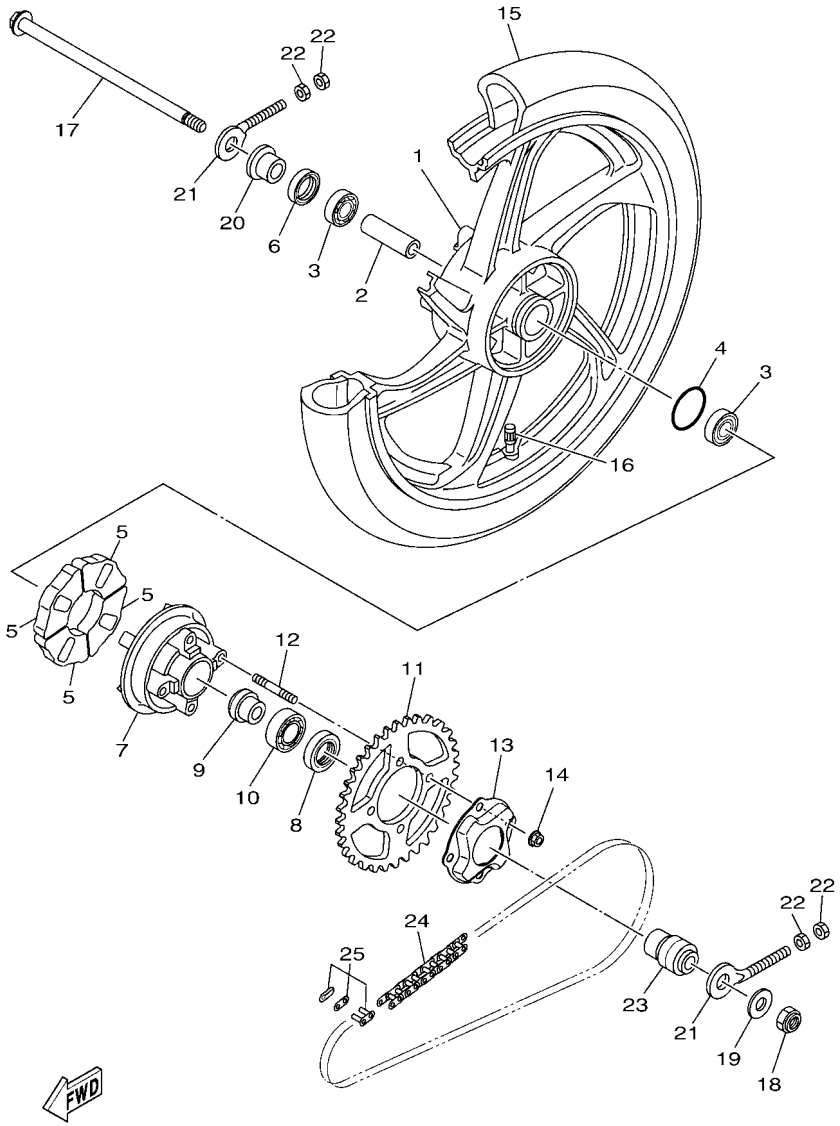

BDK1440-X280

FIG. 28 REAR WHEEL

REF. NO.	PART NO.	DESCRIPTION	BDK1	BDK2				REMARKS
1	5XK–F5338–00–33	CAST WHEEL, REAR	1					YB
	5XK–F5338–00–P0	CAST WHEEL, REAR		1				MDOM2
2	90387–123A9	COLLAR	1	1				
3	93306–301YM	BEARING	2	2				
4	93210–41041	O-RING	1	1				
5	1S8–F5364–00	DAMPER	4	4				
6	93106–20825	OIL SEAL	1	1				
7	1S8–F5366–00	CLUTCH, HUB	1	1				
8	93106–26815	OIL SEAL	1	1				
9	90387–127Y0	COLLAR	1	1				
10	93306–004XB	BEARING	1	1				
11	3YR–F5439–10	SPROCKET, DRIVEN (39T)	1	1				
12	90116–08091	BOLT, STUD	4	4				
13	BDK–F5689–00	PLATE, GUIDE	1	1				
14	95602–08200	NUT, U FLANGE	4	4				
15	94108–17868	TIRE(80/90-17M/C 50P V421R TL)	1	1				VEE RUBBER
16	93900–00817	VALVE, RIM (TR412)	1	1				
17	55S–F5381–00	AXLE, WHEEL	1	1				
18	90185–12804	NUT, SELF-LOCKING	1	1				
19	90201–12688	WASHER, PLATE	1	1				
20	90387–12865	COLLAR	1	1				
21	BDK–F5388–00	PULLER, CHAIN 1	2	2				
22	90170–06809	NUT	4	4				
23	BDK–F5377–00	COLLAR, WHEEL	1	1				
24	94568–84113	CHAIN (RK-M 428SB X 113L)	1	1				
25	94668–84001	JOINT, CHAIN (RK-M 428M)	1	1				

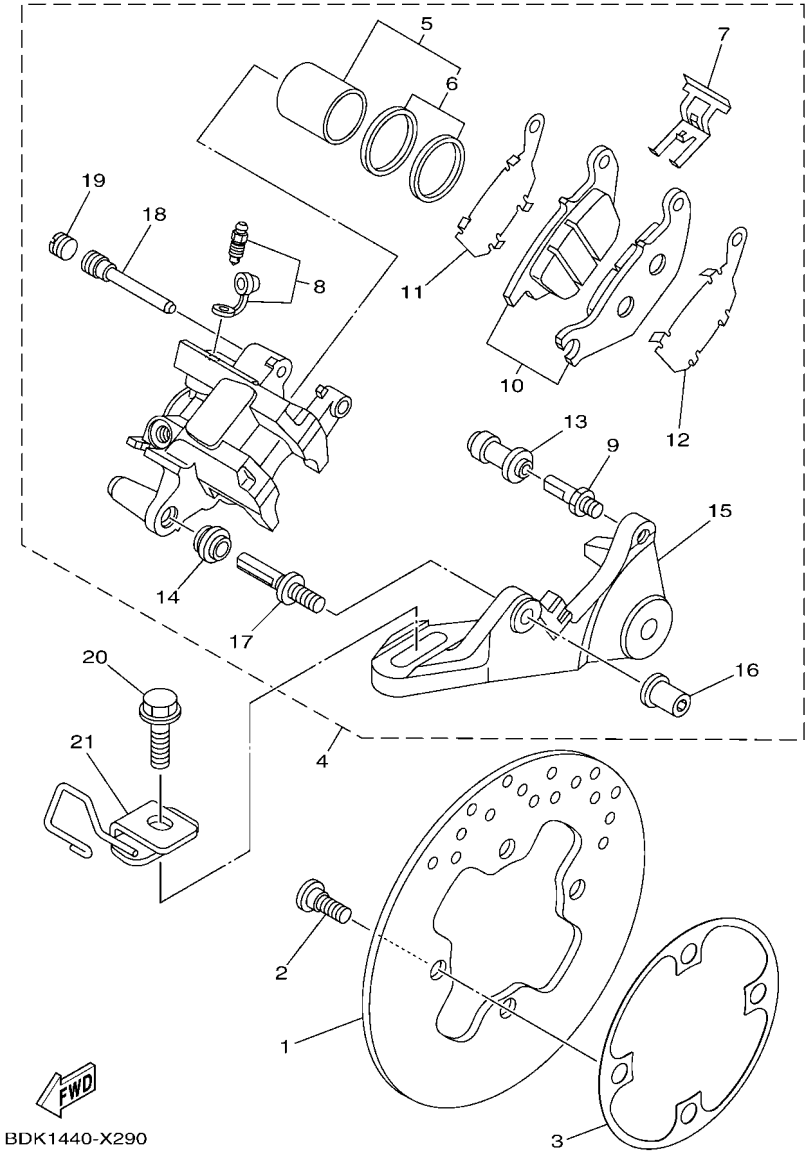

FIG. 29 REAR BRAKE CALIPER

REF. NO.	PART NO.	DESCRIPTION	BDK1	BDK2				REMARKS
1	55P–F582W–00	DISK, REAR BRAKE 2	1	1				
2	90109–08015	BOLT	4	4				
3	BDK–F518A–00	PLATE, FITTING	1	1				
4	BDK–F580W–00	CALIPER ASSY, REAR 2	1	1				
5	50C–F5802–00	.PISTON ASSY, CALIPER	1	1				
6	3GD–25803–00	..CALIPER SEAL KIT	1	1				
7	4S3–F5919–00	.SUPPORT, PAD	1	1				
8	1UY–WF048–50	.BLEED SCREW KIT	1	1				
9	55P–F5914–00	.PIN, SLIDE	1	1				
10	1PA–F5806–00	.BRAKE PAD KIT 2	1	1				
11	4S3–F5827–00	.SHIM, CALIPER	1	1				
12	4S3–F5828–00	.SHIM, CALIPER	1	1				
13	1UY–F5937–51	.BOOT 2	1	1				
14	3JD–F5917–00	.BOOT, CALIPER	1	1				
15	55P–F5921–00	.BRACKET, SUPPORT	1	1				
16	55P–F5961–00	.NUT	1	1				
17	55P–F536G–00	.PIN	1	1				
18	55P–F5933–00	.WASHER, PAD PIN	1	1				
19	55P–F5916–00	.PLUG	1	1				
20	95D32–10035	BOLT, FLANGE DEEP RECESS	1	1				
21	55C–F2167–00	GUIDE	1	1				

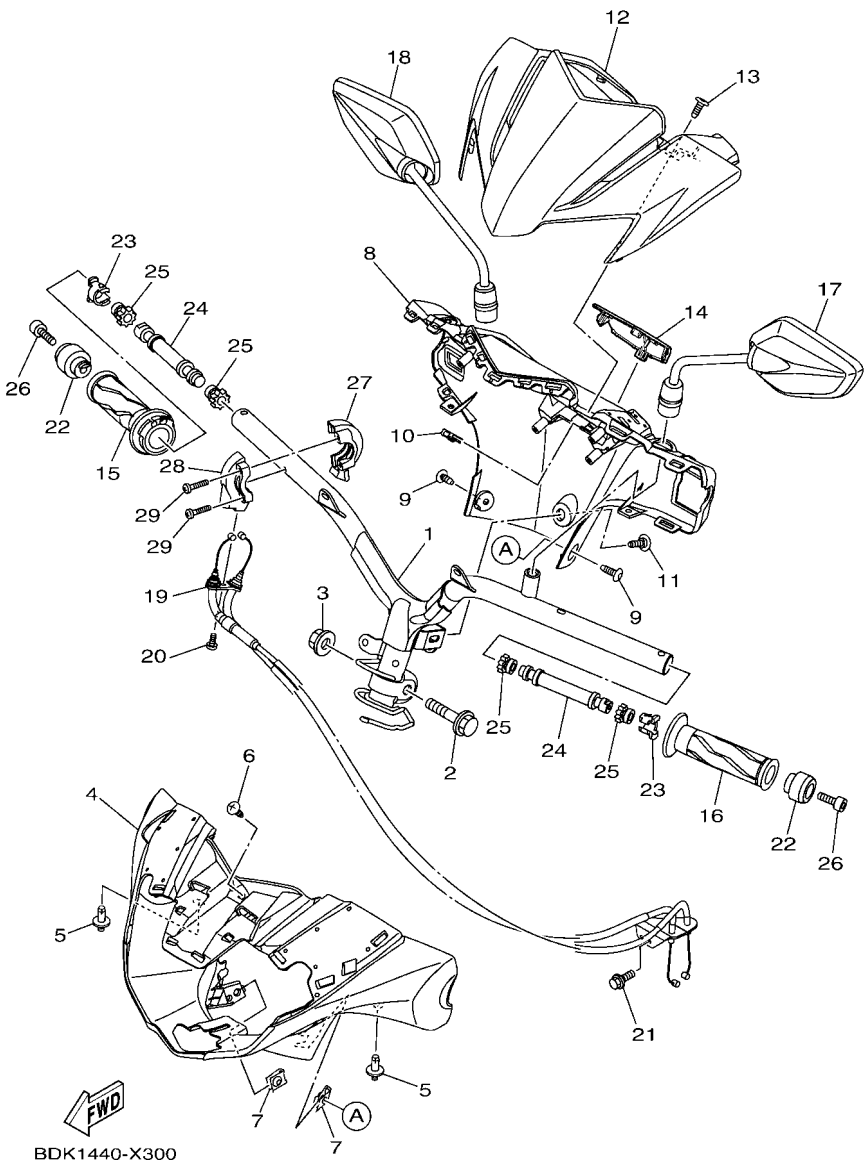

FIG. 30 STEERING HANDLE & CABLE

REF. NO.	PART NO.	DESCRIPTION	BDK1	BDK2				REMARKS
1	BDK–F6110–00	HANDLE COMP.	1	1				
2	90105–10896	BOLT, FLANGE	1	1				
3	90185–10011	NUT, SELF-LOCKING	1	1				
4	BDK–F6143–00	COVER, HANDLE UPPER 1	1	1				
5	90269–06816	RIVET	2	2				
6	97702–50016	SCREW,TAPPING	1	1				
7	90183–05807	NUT, SPRING	2	2				
8	BDK–F6145–00	COVER, HANDLE UPPER 2	1	1				
9	90160–05009	SCREW, ROUND TAPPING	2	2				
10	90183–05807	NUT, SPRING	1	1				
11	90111–06848	BOLT,HEX. SOCKET BUTTON	1	1				
12	BDK–F6216–00–P1	CAP, HANDLEBAR COVER	1					UR FOR VRC1
	BDK–F6216–00–P2	CAP, HANDLEBAR COVER	1					UR FOR CM6
	BDK–F6216–00–P3	CAP, HANDLEBAR COVER	1					UR FOR DNPM1
	BDK–F6216–00–P0	CAP, HANDLEBAR COVER		1				MDNMA
13	97702–50016	SCREW,TAPPING	1	1				
14	BDK–F6477–00	COVER	1	1				
15	B17–F6240–02	GRIP ASSY	1	1				
16	1VP–F6241–00	GRIP	1	1				
17	B17–F6280–10	REAR VIEW MIRROR ASSY (LEFT)	1	1				
18	B17–F6290–10	REAR VIEW MIRROR ASSY (RIGHT)	1	1				
19	BDK–F6301–00	THROTTLE CABLE ASSY	1	1				
20	92012–05016	BOLT, BUTTON HEAD	1	1				
21	95022–06012	BOLT, FLANGE	1	1				
22	55C–F6246–00	END, GRIP	2	2				
23	16S–F6257–00	STOPPER	2	2				
24	BDK–F622H–00	WEIGHT	2	2				

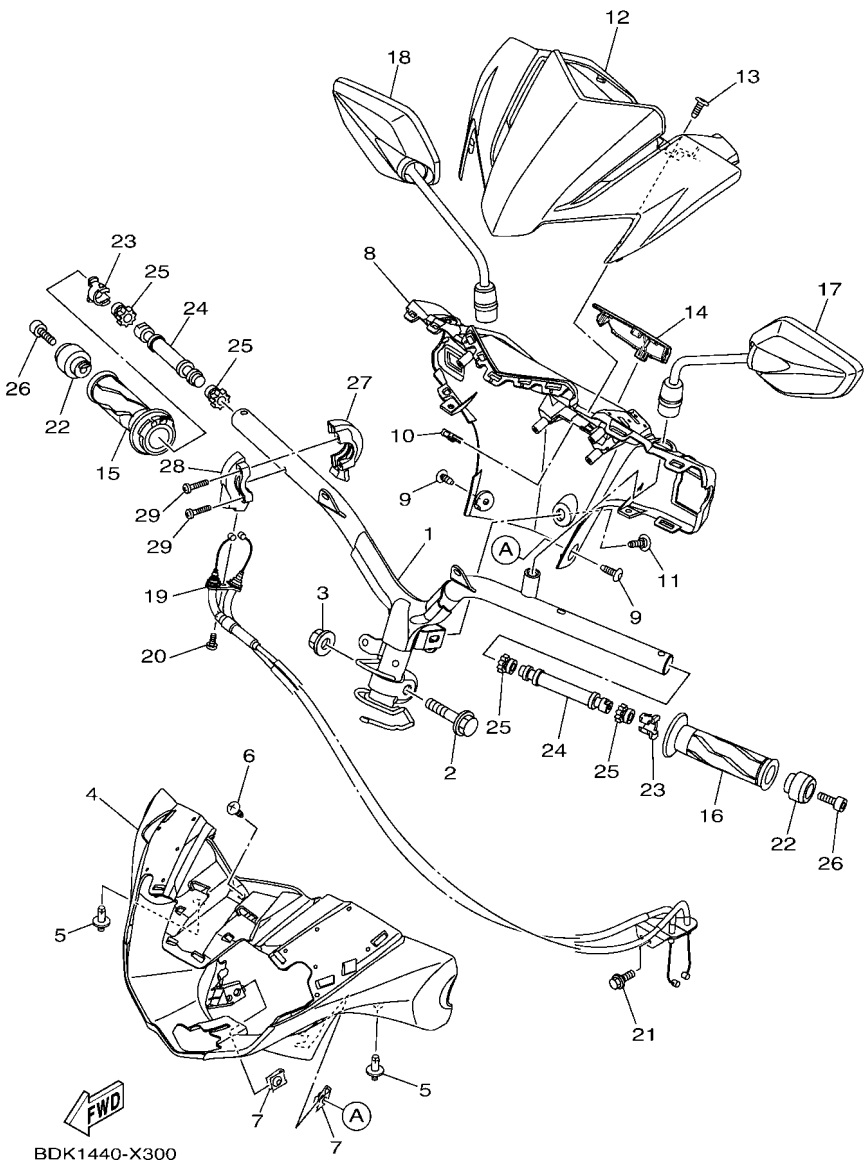

FIG. 30 STEERING HANDLE & CABLE

REF. NO.	PART NO.	DESCRIPTION	BDK1	BDK2				REMARKS
25	1S8–F622F–00	DAMPER, LOCATING 1	4	4				
26	91317–06030	BOLT,HEX.SOCKET HEAD	2	2				
27	55D–F6281–00	CAP, GRIP UPPER	1	1				
28	55D–F6282–00	CAP, GRIP UNDER	1	1				
29	98507–05025	SCREW, PAN HEAD	2	2				

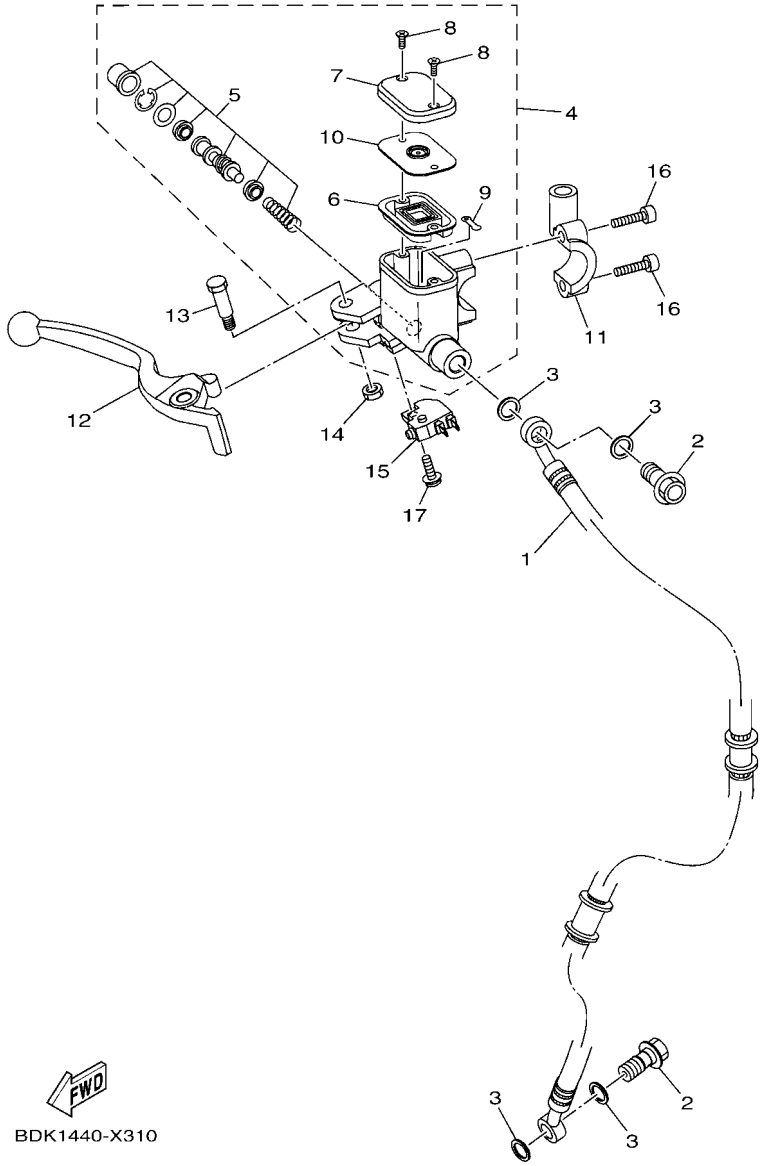

FIG. 31 FRONT MASTER CYLINDER

REF. NO.	PART NO.	DESCRIPTION	BDK1	BDK2				REMARKS
1	BDK–F5872–00	HOSE, BRAKE 1	1	1				
2	90401–10812	BOLT, UNION	2	2				
3	90201–10118	WASHER, PLATE	4	4				
4	2ND–F5870–00	MASTER CYLINDER SUB ASSY	1	1				
5	5P0–F580A–00	.CYLINDER KIT, MASTER	1	1				
6	2ND–F5854–00	.DIAPHRAGM, RESERVOIR	1	1				
7	2ND–F5852–00	.CAP, RESERVOIR	1	1				
8	36Y–2589H–00	.SCREW	2	2				
9	3RW–25889–00	.SEPARATOR	1	1				
10	2ND–F5855–00	.BUSH,DIAPHRAGM	1	1				
11	5TL–F5867–11	BRACKET,MASTER CYLINDER(BLACK)	1	1				
12	2ND–H3922–00	LEVER 2	1	1				
13	90109–06577	BOLT	1	1				
14	95602–06100	NUT, SELF-LOCKING	1	1				
15	2DP–H3980–01	FRONT STOP SWITCH ASSY	1	1				
16	91317–06025	BOLT,HEX.SOCKET HEAD	2	2				
17	97602–04312	SCREW, PAN HEAD WITH WASHER	1	1				

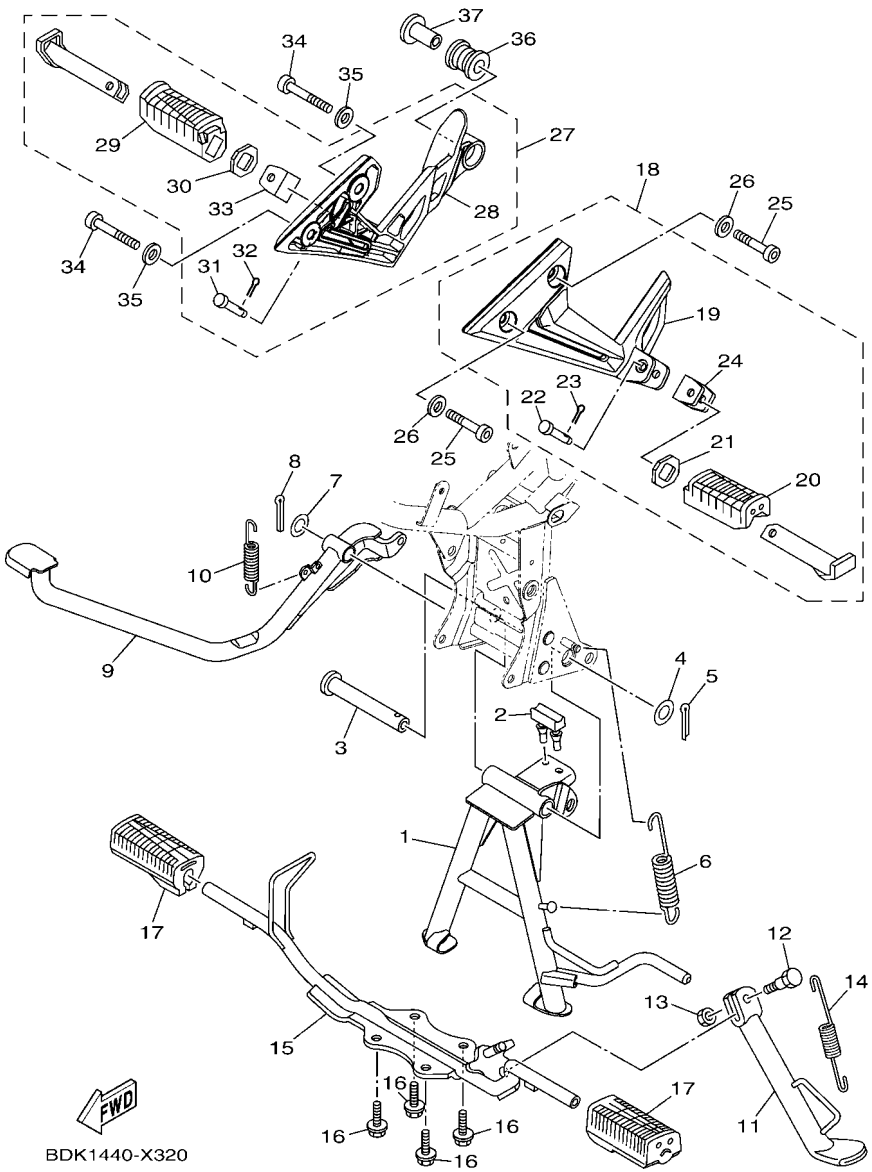

FIG. 32 STAND & FOOTREST

REF. NO.	PART NO.	DESCRIPTION	BDK1	BDK2				REMARKS
1	BDK–F7111–00	STAND, MAIN	1	1				
2	1S8–F7114–00	STOPPER, MAIN STAND	1	1				
3	5YP–F7112–00	SHAFT, MAIN STAND	1	1				
4	90201–163H8	WASHER, PLATE	1	1				
5	91401–30030	PIN, COTTER	1	1				
6	90506–35812	SPRING, TENSION	1	1				
7	90201–14811	WASHER, PLATE	1	1				
8	91401–30030	PIN, COTTER	1	1				
9	BDK–F7211–00	PEDAL, BRAKE	1	1				
10	90506–20041	SPRING, TENSION	1	1				
11	1S7–F7311–00	STAND, SIDE	1	1				
12	90109–08034	BOLT	1	1				
13	95307–08700	NUT	1	1				
14	90506–23809	SPRING, TENSION	1	1				
15	BDK–F7411–00	FOOTREST 1	1	1				
16	95D32–08016	BOLT, FLANGE DEEP RECESS	4	4				
17	5LL–F7413–00	COVER, FOOTREST	2	2				
18	55C–F7430–00–P2	REAR FOOTREST ASSY 1	1	1				MBL2
19	55C–F7452–00–P2	.BRACKET, FOOTREST 1	1	1				MBL2
20	5BU–F7433–00	.COVER, REAR FOOTREST	1	1				
21	5BU–F7445–00	.PLATE 1	1	1				
22	91702–08042	.PIN, CLEVIS	1	1				
23	90252–23800	.PIN, COTTER	1	1				
24	5TF–F7314–00	.STOPPER	1	1				
25	91312–08025	BOLT, HEXAGON SOCKET HEAD	2	2				
26	90201–086P8	WASHER, PLATE	2	2				
27	55C–F7440–00–P2	REAR FOOTREST ASSY 2	1	1				MBL2

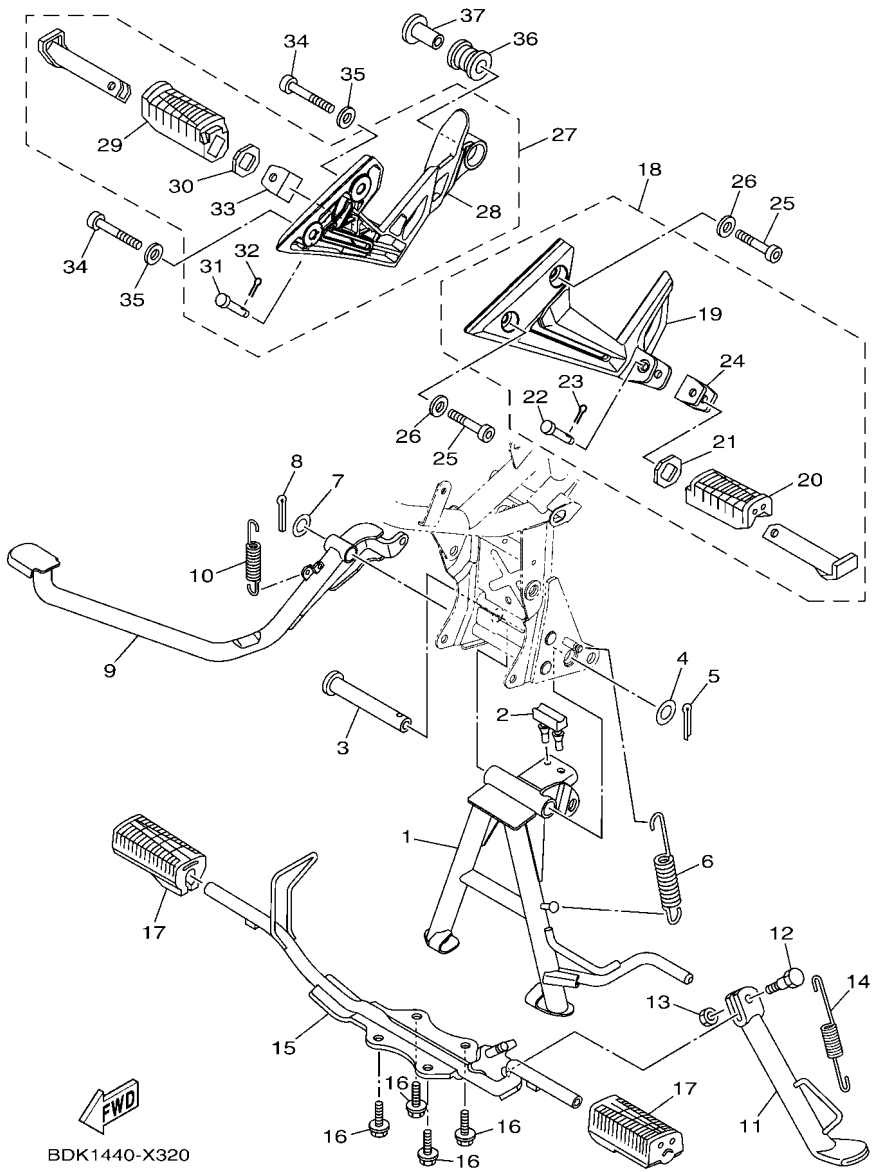

FIG. 32 STAND & FOOTREST

REF. NO.	PART NO.	DESCRIPTION	BDK1	BDK2				REMARKS
28	55C–F7462–00–P2	.BRACKET, FOOTREST 2	1	1				MBL2
29	5BU–F7444–00	.COVER, REAR FOOTREST	1	1				
30	5BU–F7445–00	.PLATE 1	1	1				
31	91702–08042	.PIN, CLEVIS	1	1				
32	90252–23800	.PIN, COTTER	1	1				
33	5TF–F7314–00	.STOPPER	1	1				
34	91312–08025	BOLT, HEXAGON SOCKET HEAD	2	2				
35	90201–086P8	WASHER, PLATE	2	2				
36	5TF–F7424–00	DAMPER, FOOTREST 2	1	1				
37	90387–10805	COLLAR	1	1				

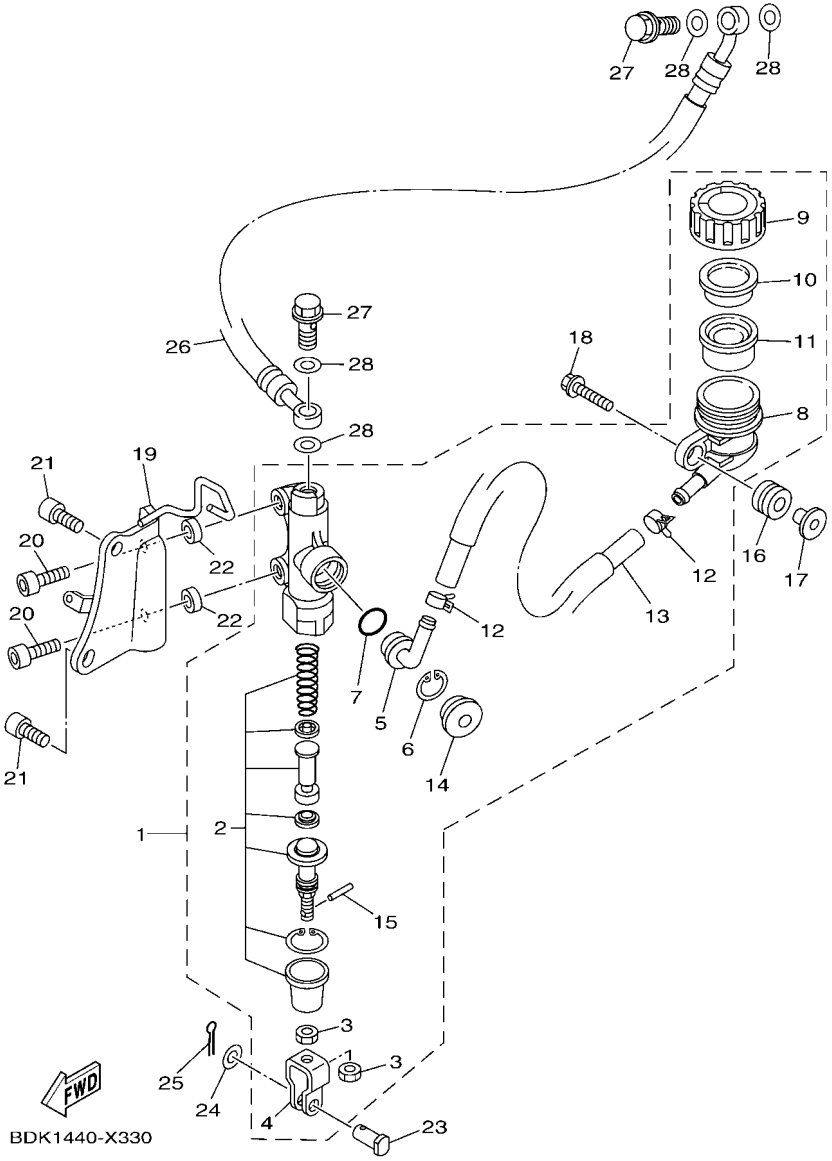

FIG. 33 REAR MASTER CYLINDER

REF. NO.	PART NO.	DESCRIPTION	BDK1	BDK2				REMARKS
1	50C–F583V–02	RR. MASTER CYLINDER ASSY.	1	1				
2	50C–W0042–00	.CYLINDER KIT, MASTER	1	1				
3	95301–08700	.NUT	2	2				
4	50C–F7222–00	.JOINT	1	1				
5	50C–F582A–00	.JOINT	1	1				
6	50C–F5866–00	.CIRCLIP	1	1				
7	93210–15620	.O-RING	1	1				
8	50C–F5894–11	.TANK, RESERVOIR	1	1				
9	50C–F5852–00	.CAP, RESERVOIR	1	1				
10	50C–F5855–00	.BUSH,DIAPHRAGM	1	1				
11	2VN–F5854–00	.DIAPHRAGM, RESERVOIR	1	1				
12	90467–12085	.CLIP	2	2				
13	50C–F5895–00	.HOSE, RESERVOIR	1	1				
14	50C–F589A–00	.COVER, DUST	1	1				
15	5BU–27234–00	.PIN, BRAKE ROD	1	1				
16	55C–F4742–00	GROMMET	1	1				
17	55C–F6259–00	COLLAR	1	1				
18	95802–06025	BOLT, FLANGE	1	1				
19	BDK–F133F–00	BRACKET, MASTER CYLINDER	1	1				
20	91312–08020	BOLT, HEXAGON SOCKET HEAD	2	2				
21	91312–08016	BOLT, HEXAGON SOCKET HEAD	2	2				
22	90387–085E1	COLLAR	2	2				
23	90240–08124	PIN, CLEVIS	1	1				
24	90201–08066	WASHER, PLATE	1	1				
25	91401–16012	PIN, COTTER	1	1				
26	50C–F5873–00	HOSE, BRAKE 2	1	1				
27	90401–10812	BOLT, UNION	2	2				

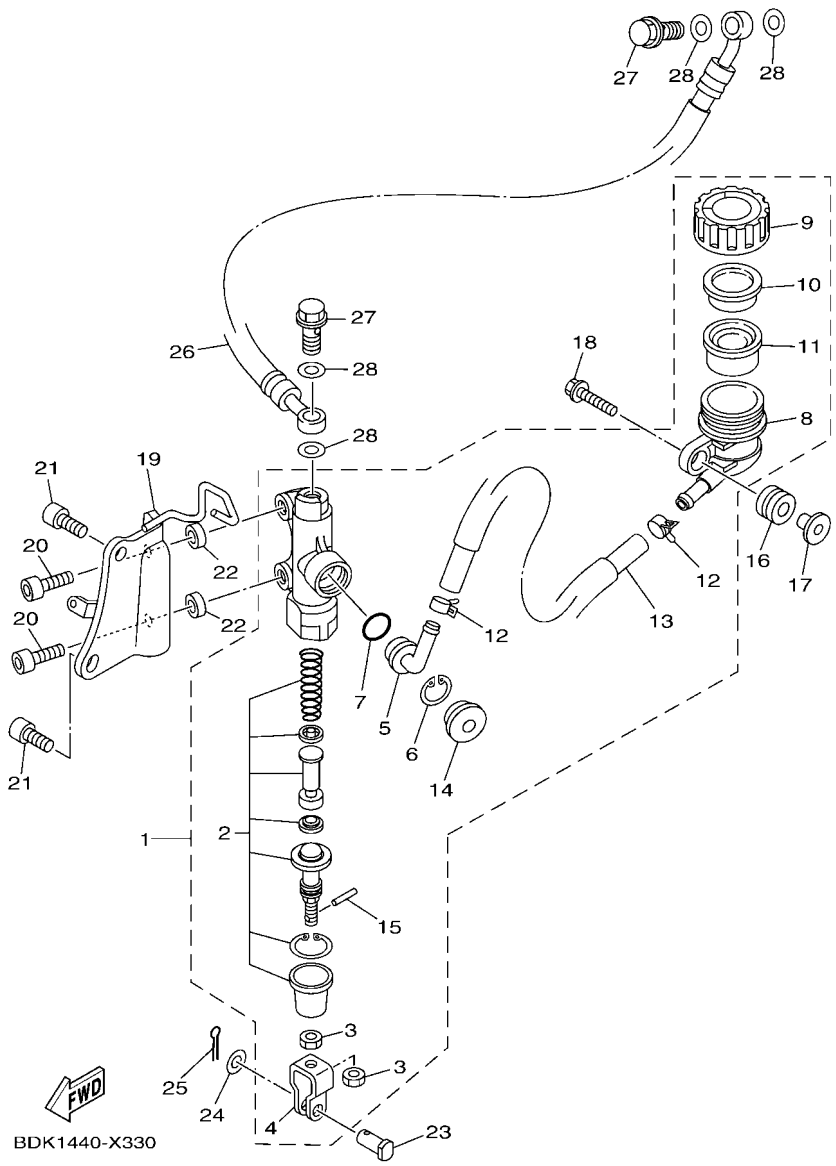

FIG. 33 REAR MASTER CYLINDER

REF. NO.	PART NO.	DESCRIPTION	BDK1	BDK2				REMARKS
28	90201–10118	WASHER, PLATE	4	4				

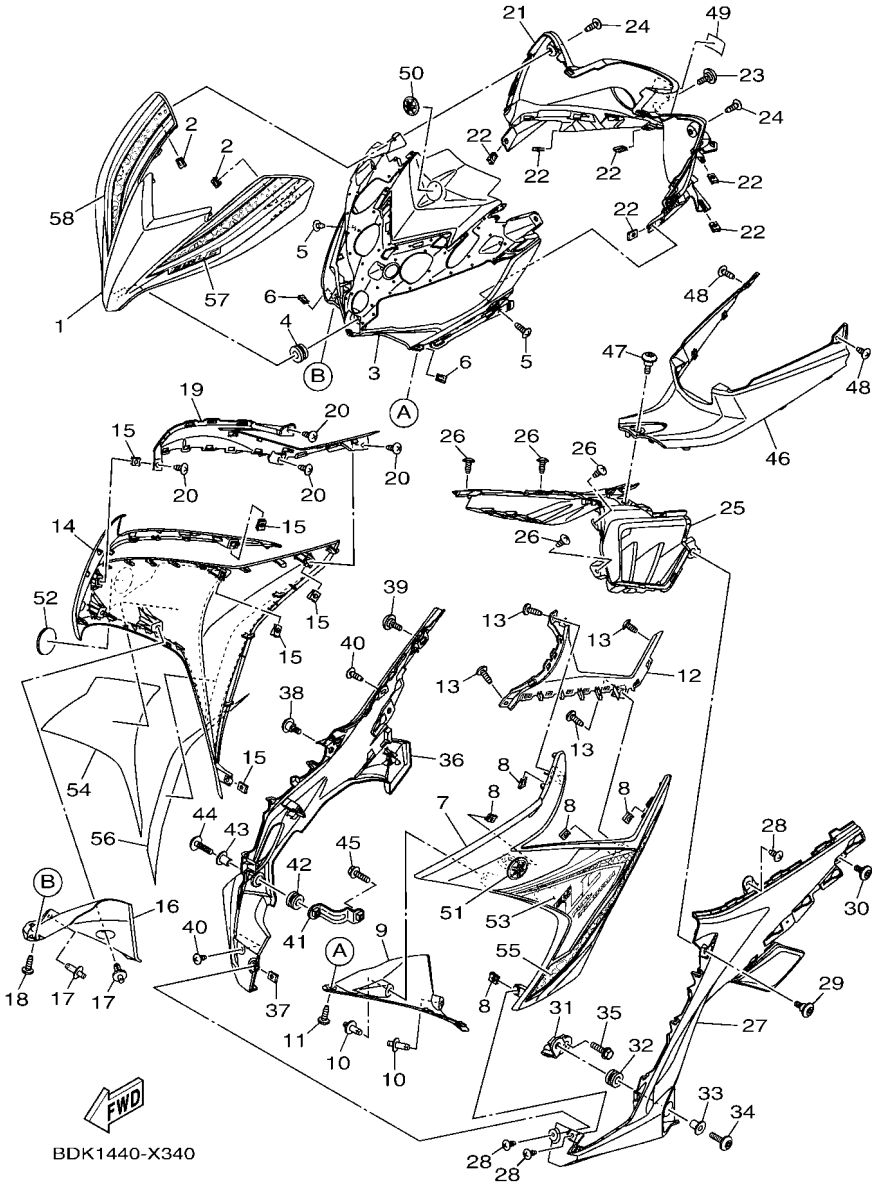

FIG. 34 LEG SHIELD

REF. NO.	PART NO.	DESCRIPTION	BDK1	BDK2				REMARKS
1	BDK–F3391–00–P1	PANEL, FRONT	1					UR FOR VRC1
	BDK–F3391–00–P0	PANEL, FRONT	1					UR SMX FOR CM6
	BDK–F3391–00–P2	PANEL, FRONT	1					UR FOR DNPM1
2	90183–05807	NUT, SPRING	2					
3	BDK–F836K–00	PANEL, INNER 1	1					
4	90480–13398	GROMMET	1					
5	97702–50012	SCREW, TAPPING	2					
6	90183–05807	NUT, SPRING	2					
7	BDK–F835U–00–P1	PANEL 1	1					SMX FOR VRC1,CM6
	BDK–F835U–00–P2	PANEL 1	1					FOR DNPM1
8	90183–05807	NUT, SPRING	5					
9	BDK–F137U–00	GUIDE, AIR 1	1					
10	90269–06816	RIVET	2					
11	97707–50012	SCREW, TRUSS HEAD TAPPING	1					
12	BDK–F842M–00	COVER 1	1					
13	97702–50012	SCREW, TAPPING	4					
14	BDK–F835V–00–P1	PANEL 2	1					SMX FOR VRC1,CM6
	BDK–F835V–00–P2	PANEL 2	1					FOR DNPM1
15	90183–05807	NUT, SPRING	5					
16	BDK–F137V–00	GUIDE, AIR 2	1					
17	90269–06816	RIVET	2					
18	97707–50012	SCREW, TRUSS HEAD TAPPING	1					
19	BDK–F842N–00	COVER 2	1					
20	97702–50012	SCREW, TAPPING	4					
21	BDK–F836L–00	PANEL, INNER 2	1					
22	90183–05807	NUT, SPRING	6					
23	90109–068D0	BOLT	1					

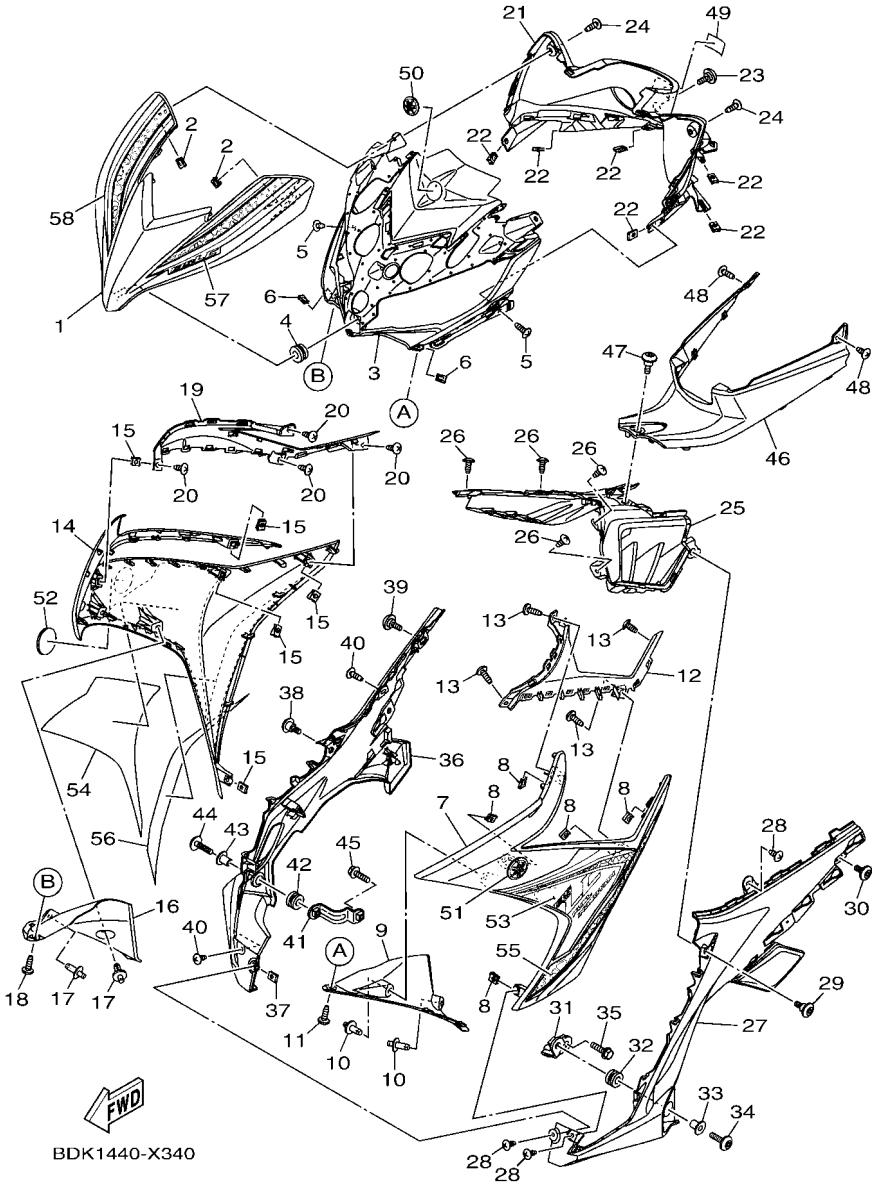

FIG. 34 LEG SHIELD

REF. NO.	PART NO.	DESCRIPTION	BDK1	BDK2				REMARKS
24	97707–50016	SCREW, TRUSS HEAD TAPPING	2					
25	BDK–F836M–00	PANEL, INNER 3	1					
26	97702–50012	SCREW, TAPPING	4					
27	BDK–F8385–00	COVER, LOWER	1					
28	97707–50012	SCREW, TRUSS HEAD TAPPING	3					
29	90109–068C8	BOLT	1					
30	90111–06857	BOLT,HEX. SOCKET BUTTON	1					
31	BDK–F8321–00	STAY 1	1					
32	90480–18418	GROMMET	1					
33	90387–09801	COLLAR	1					
34	90111–06815	BOLT,HEX. SOCKET BUTTON	1					
35	95807–06020	BOLT, FLANGE	1					
36	BDK–F8395–00	COVER, UNDER 2	1					
37	90183–05807	NUT, SPRING	1					
38	90109–068C8	BOLT	1					
39	90111–06857	BOLT,HEX. SOCKET BUTTON	1					
40	97707–50012	SCREW, TRUSS HEAD TAPPING	2					
41	55D–F8322–00	STAY 2	1					
42	90480–18418	GROMMET	1					
43	90387–09801	COLLAR	1					
44	90111–06815	BOLT,HEX. SOCKET BUTTON	1					
45	95807–06020	BOLT, FLANGE	1					
46	BDK–F8365–00	COVER	1					
47	90109–068C8	BOLT	1					
48	97707–50012	SCREW, TRUSS HEAD TAPPING	2					
49	B17–F1568–00	LABEL, WARNING	1					
50	5P1–F1737–10	EMBLEM	1					

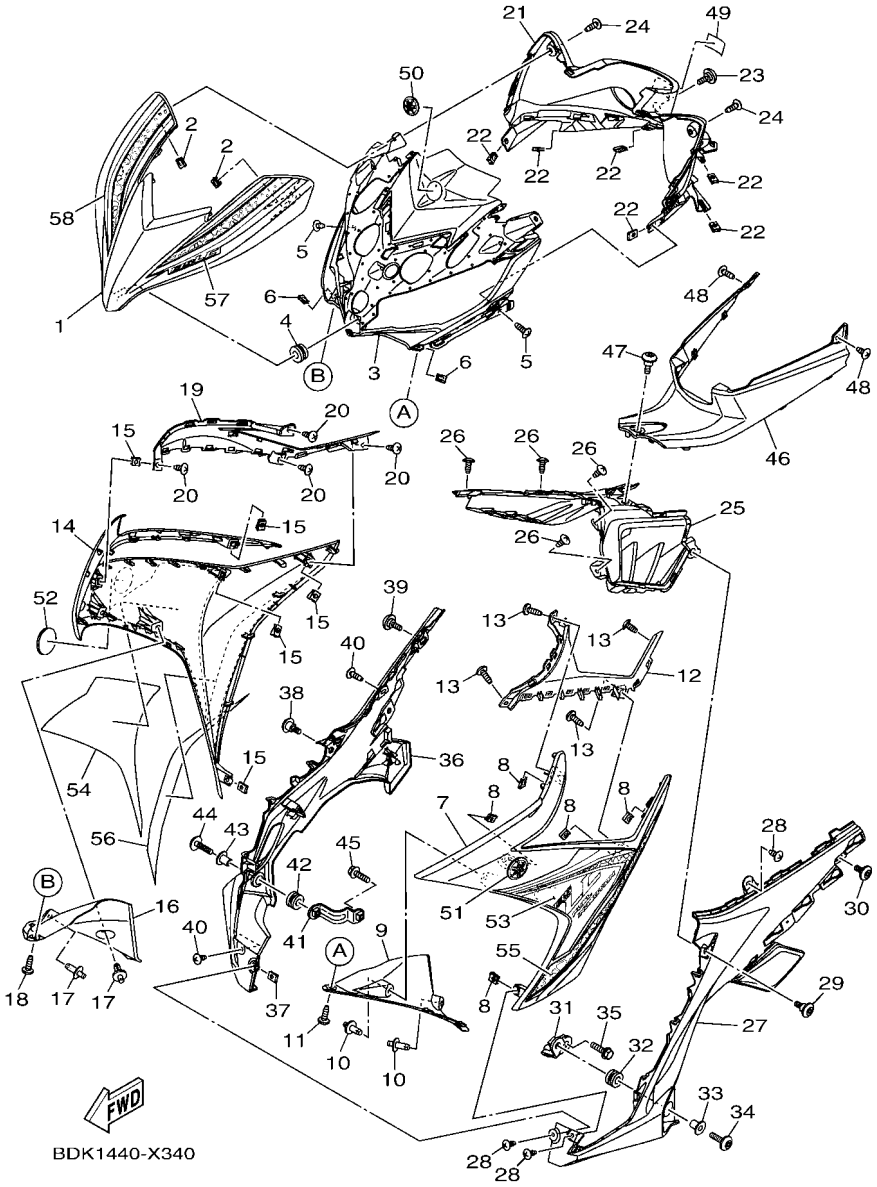

FIG. 34 LEG SHIELD

REF. NO.	PART NO.	DESCRIPTION	BDK1	BDK2				REMARKS
51	29B–F411B–00	EMBLEM	1					
52	29B–F411B–00	EMBLEM	1					
53	BDK–F8391–00	GRAPHIC 1	1					UR FOR VRC1
	BDK–F8391–10	GRAPHIC 1	1					UR FOR CM6
	BDK–F8391–20	GRAPHIC 1	1					UR FOR DNPM1
54	BDK–F8392–00	GRAPHIC 2	1					UR FOR VRC1
	BDK–F8392–10	GRAPHIC 2	1					UR FOR CM6
	BDK–F8392–20	GRAPHIC 2	1					UR FOR DNPM1
55	BDK–F8393–00	GRAPHIC 3	1					UR FOR VRC1
	BDK–F8393–10	GRAPHIC 3	1					UR FOR CM6
	BDK–F8393–20	GRAPHIC 3	1					UR FOR DNPM1
56	BDK–F8394–00	GRAPHIC 4	1					UR FOR VRC1
	BDK–F8394–10	GRAPHIC 4	1					UR FOR CM6
	BDK–F8394–20	GRAPHIC 4	1					UR FOR DNPM1
57	BDK–F8398–00	GRAPHIC 5	1					UR FOR VRC1
	BDK–F8398–10	GRAPHIC 5	1					UR FOR CM6
	BDK–F8398–20	GRAPHIC 5	1					UR FOR DNPM1
58	BDK–F8399–00	GRAPHIC 6	1					UR FOR VRC1
	BDK–F8399–10	GRAPHIC 6	1					UR FOR CM6
	BDK–F8399–20	GRAPHIC 6	1					UR FOR DNPM1

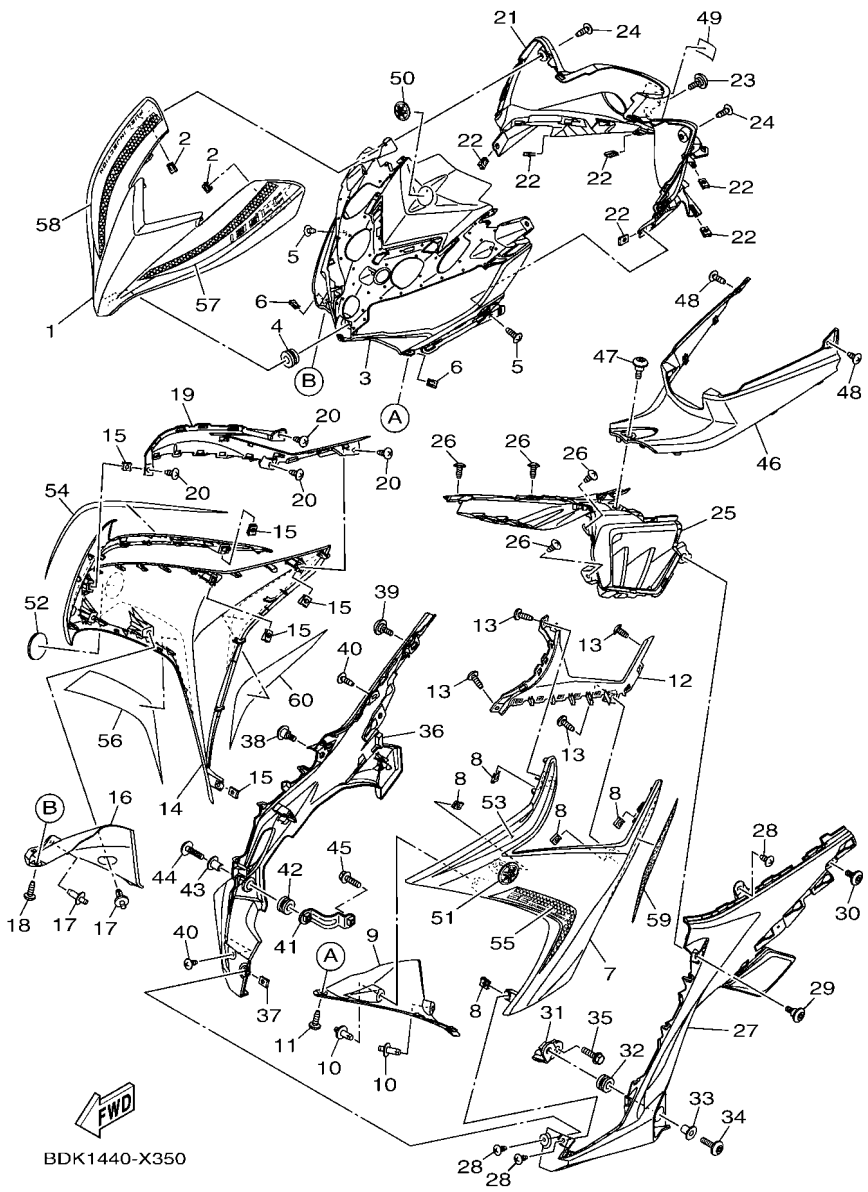

FIG. 35 LEG SHIELD 2

REF. NO.	PART NO.	DESCRIPTION	BDK1	BDK2				REMARKS
1	BDK–F3391–00–P0	PANEL, FRONT		1				SMX FOR MDNMA
2	90183–05807	NUT, SPRING		2				
3	BDK–F836K–00	PANEL, INNER 1		1				
4	90480–13398	GROMMET		1				
5	97702–50012	SCREW, TAPPING		2				
6	90183–05807	NUT, SPRING		2				
7	BDK–F835U–00–P0	PANEL 1		1				MDNMA
8	90183–05807	NUT, SPRING		5				
9	BDK–F137U–00	GUIDE, AIR 1		1				
10	90269–06816	RIVET		2				
11	97707–50012	SCREW, TRUSS HEAD TAPPING		1				
12	BDK–F842M–00	COVER 1		1				
13	97702–50012	SCREW, TAPPING		4				
14	BDK–F835V–00–P0	PANEL 2		1				MDNMA
15	90183–05807	NUT, SPRING		5				
16	BDK–F137V–00	GUIDE, AIR 2		1				
17	90269–06816	RIVET		2				
18	97707–50012	SCREW, TRUSS HEAD TAPPING		1				
19	BDK–F842N–00	COVER 2		1				
20	97702–50012	SCREW, TAPPING		4				
21	BDK–F836L–00	PANEL, INNER 2		1				
22	90183–05807	NUT, SPRING		6				
23	90109–068D0	BOLT		1				
24	97707–50016	SCREW, TRUSS HEAD TAPPING		2				
25	BDK–F836M–00	PANEL, INNER 3		1				
26	97702–50012	SCREW, TAPPING		4				
27	BDK–F8385–00	COVER, LOWER		1				

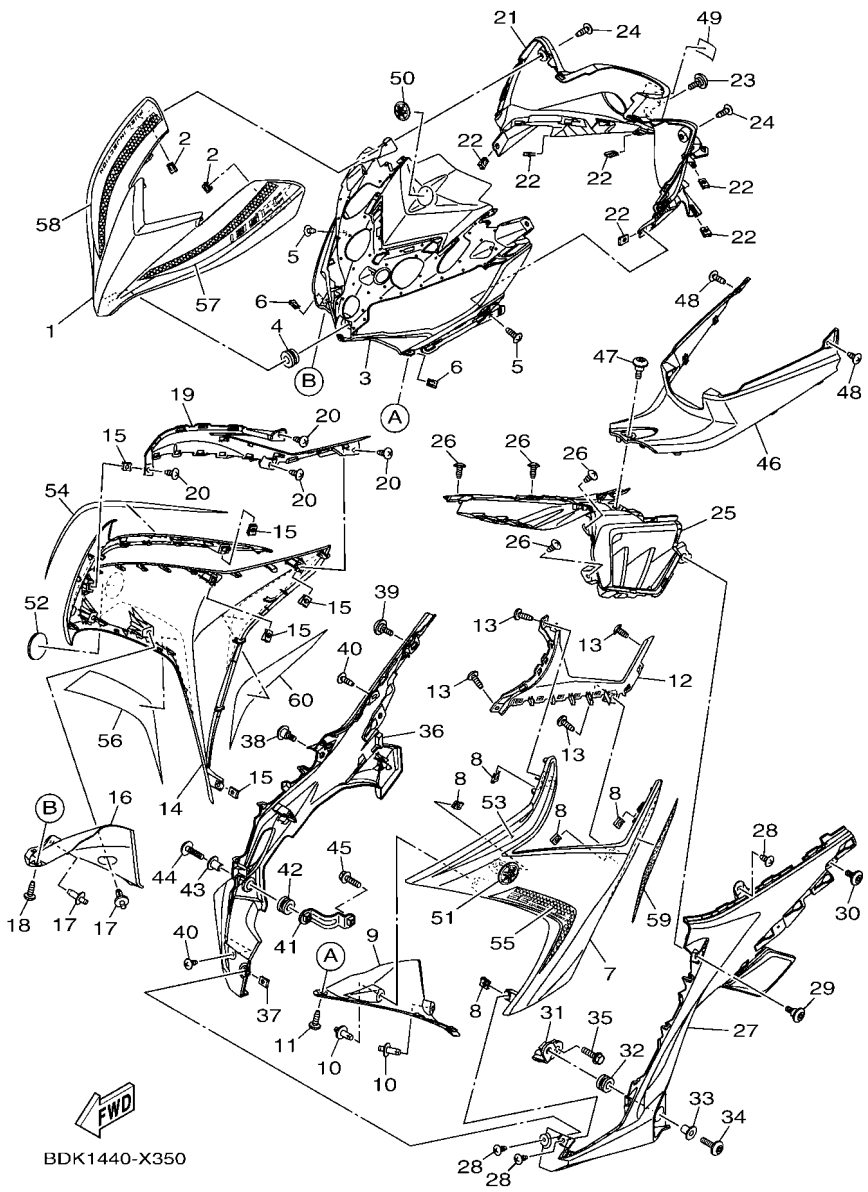

FIG. 35 LEG SHIELD 2

REF. NO.	PART NO.	DESCRIPTION	BDK1	BDK2				REMARKS
28	97707–50012	SCREW, TRUSS HEAD TAPPING		3				
29	90109–068C8	BOLT		1				
30	90111–06857	BOLT,HEX. SOCKET BUTTON		1				
31	BDK–F8321–00	STAY 1		1				
32	90480–18418	GROMMET		1				
33	90387–09801	COLLAR		1				
34	90111–06815	BOLT,HEX. SOCKET BUTTON		1				
35	95807–06020	BOLT, FLANGE		1				
36	BDK–F8395–00	COVER, UNDER 2		1				
37	90183–05807	NUT, SPRING		1				
38	90109–068C8	BOLT		1				
39	90111–06857	BOLT,HEX. SOCKET BUTTON		1				
40	97707–50012	SCREW, TRUSS HEAD TAPPING		2				
41	55D–F8322–00	STAY 2		1				
42	90480–18418	GROMMET		1				
43	90387–09801	COLLAR		1				
44	90111–06815	BOLT,HEX. SOCKET BUTTON		1				
45	95807–06020	BOLT, FLANGE		1				
46	BDK–F8365–00	COVER		1				
47	90109–068C8	BOLT		1				
48	97707–50012	SCREW, TRUSS HEAD TAPPING		2				
49	B17–F1568–00	LABEL, WARNING		1				
50	5P1–F1737–10	EMBLEM		1				
51	29B–F411B–00	EMBLEM		1				
52	29B–F411B–00	EMBLEM		1				
53	BDK–F8391–30	GRAPHIC 1		1				
54	BDK–F8392–30	GRAPHIC 2		1				

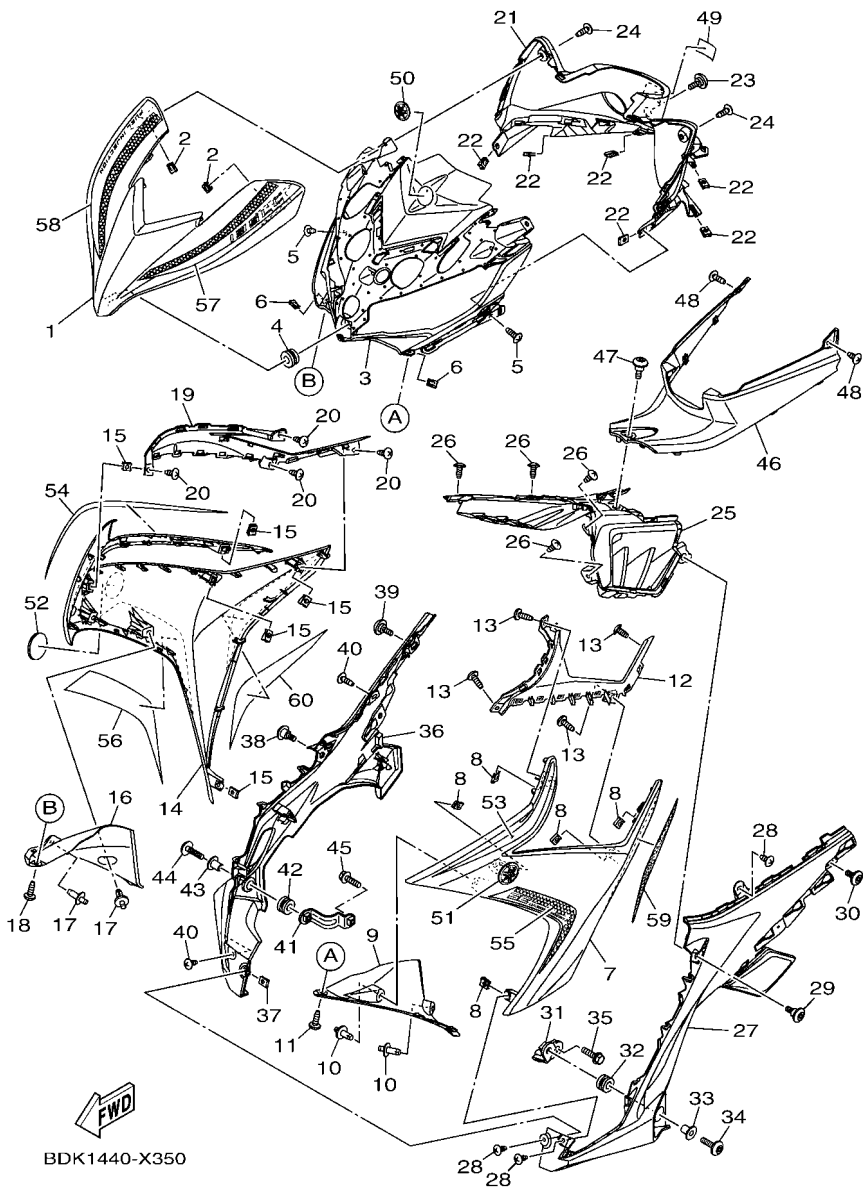

FIG. 35 LEG SHIELD 2

REF. NO.	PART NO.	DESCRIPTION	BDK1	BDK2				REMARKS
55	BDK–F8393–30	GRAPHIC 3		1				
56	BDK–F8394–30	GRAPHIC 4		1				
57	BDK–F8398–30	GRAPHIC 5		1				
58	BDK–F8399–30	GRAPHIC 6		1				
59	BDK–F839A–00	GRAPHIC 7		1				
60	BDK–F839E–00	GRAPHIC 8		1				

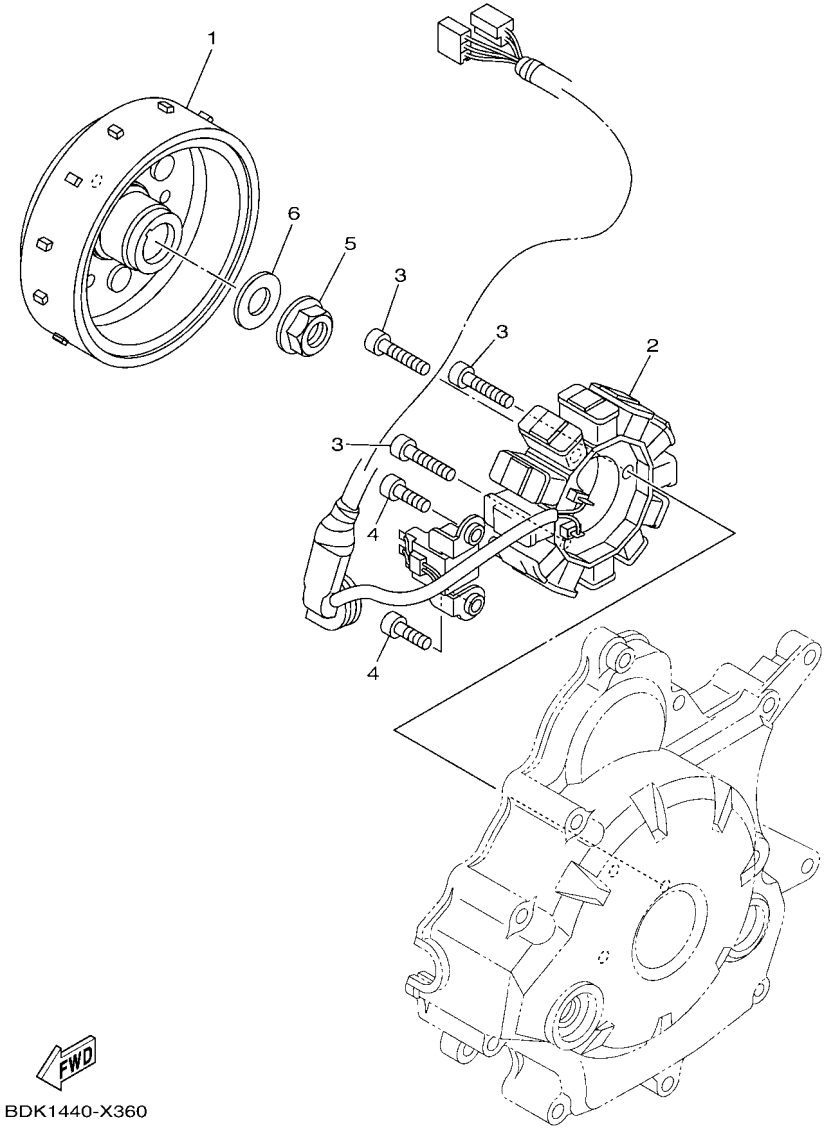

BDK1440-X360

FIG. 36 GENERATOR

REF. NO.	PART NO.	DESCRIPTION	BDK1	BDK2				REMARKS
1	BDK–H1450–00	ROTOR ASSY	1	1				
2	BDK–H1410–00	STATOR ASSY	1	1				
3	91332–06025	BOLT	3	3				
4	91332–06016	BOLT	2	2				
5	95702–12500	NUT, FLANGE	1	1				
6	90201–12019	WASHER, PLATE	1	1				

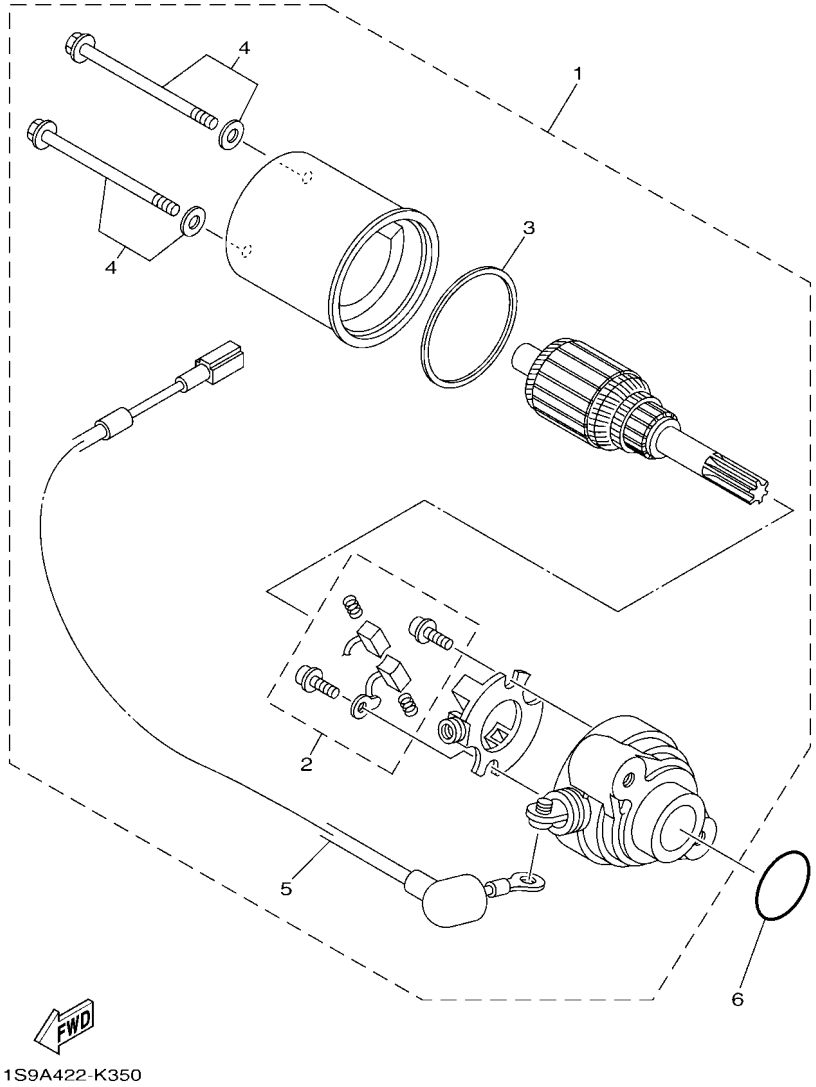

FIG. 37 STARTING MOTOR

REF. NO.	PART NO.	DESCRIPTION	BDK1	BDK2				REMARKS
1	BDK–H1800–00	STARTING MOTOR ASSY	1	1				
2	3AY–H1801–00	.BRUSH SET	1	1				
3	1S7–H1861–00	.GASKET	1	1				
4	3AY–H1828–00	.SCREW 2	2	2				
5	BDK–H183G–00	.CORD COMP.	1	1				
6	93210–26805	O-RING	1	1				

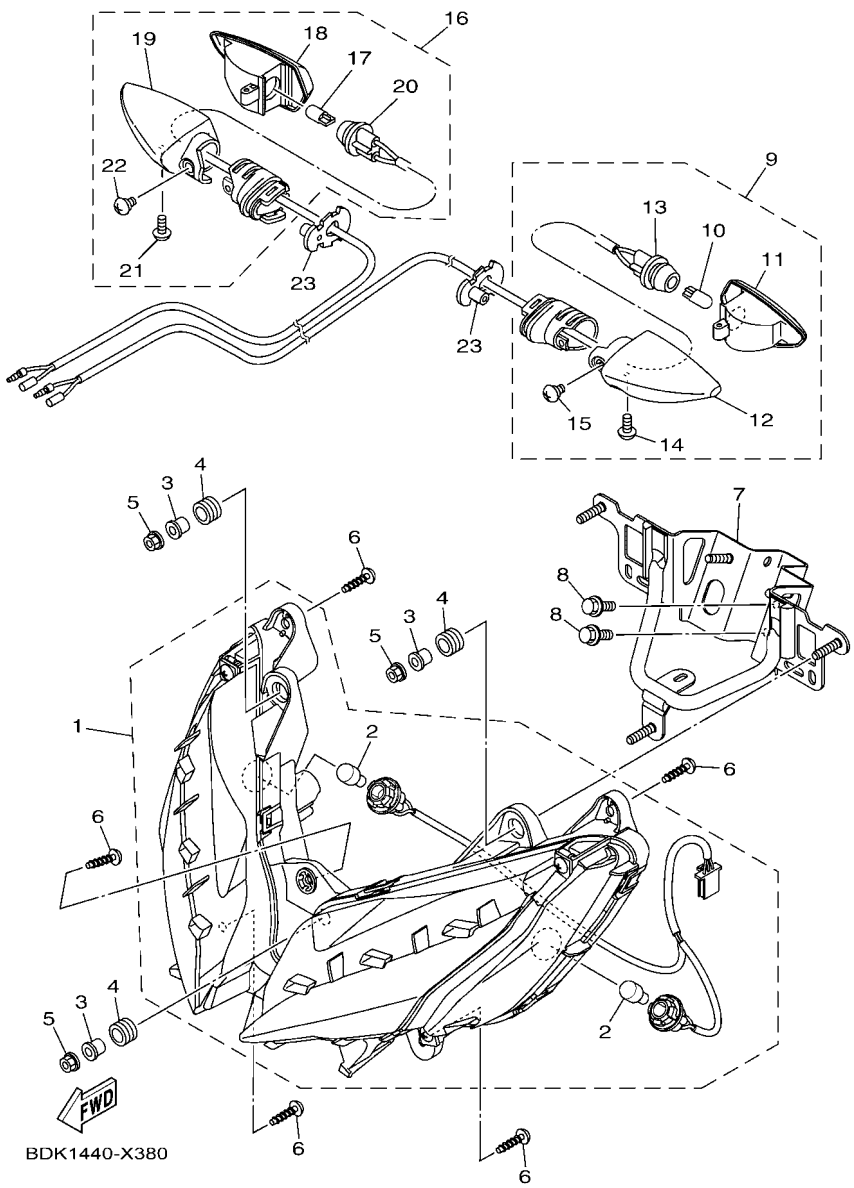

FIG. 38 FLASHER LIGHT

REF. NO.	PART NO.	DESCRIPTION	BDK1	BDK2				REMARKS
1	BDK–H3301–00	FRONT FLASHER LIGHT ASSY 1	1	1				
2	55D–H3311–00	.BULB, FLASHER (12V-10W)	2	2				
3	90387–06158	COLLAR	3	3				
4	90480–14023	GROMMET	3	3				
5	95702–06500	NUT, FLANGE	3	3				
6	97702–50016	SCREW,TAPPING	5	5				
7	BDK–H3318–00	STAY, FLASHER 1	1	1				
8	95D02–06012	BOLT, FLANGE DEEP RECESS	2	2				
9	55D–H3330–01	REAR FLASHER LIGHT ASSY 1	1	1				
10	55D–H3311–00	.BULB, FLASHER (12V-10W)	1	1				
11	55D–H333A–00	.LENS COMP 1	1	1				
12	55D–H3323–00	.BODY	1	1				
13	55D–H333E–01	.CORD ASSY	1	1				
14	55D–H3333–00	.SCREW, LENS FITTING	1	1				
15	55D–H3358–00	.SCREW, SPECIAL	1	1				
16	55D–H3340–01	REAR FLASHER LIGHT ASSY 2	1	1				
17	55D–H3311–00	.BULB, FLASHER (12V-10W)	1	1				
18	55D–H334A–00	.LENS COMP 2	1	1				
19	55D–H332M–00	.BODY 2	1	1				
20	55D–H334E–01	.CORD ASSY	1	1				
21	55D–H3333–00	.SCREW, LENS FITTING	1	1				
22	55D–H3358–00	.SCREW, SPECIAL	1	1				
23	1VP–H3318–00	STAY, FLASHER 1	2	2				

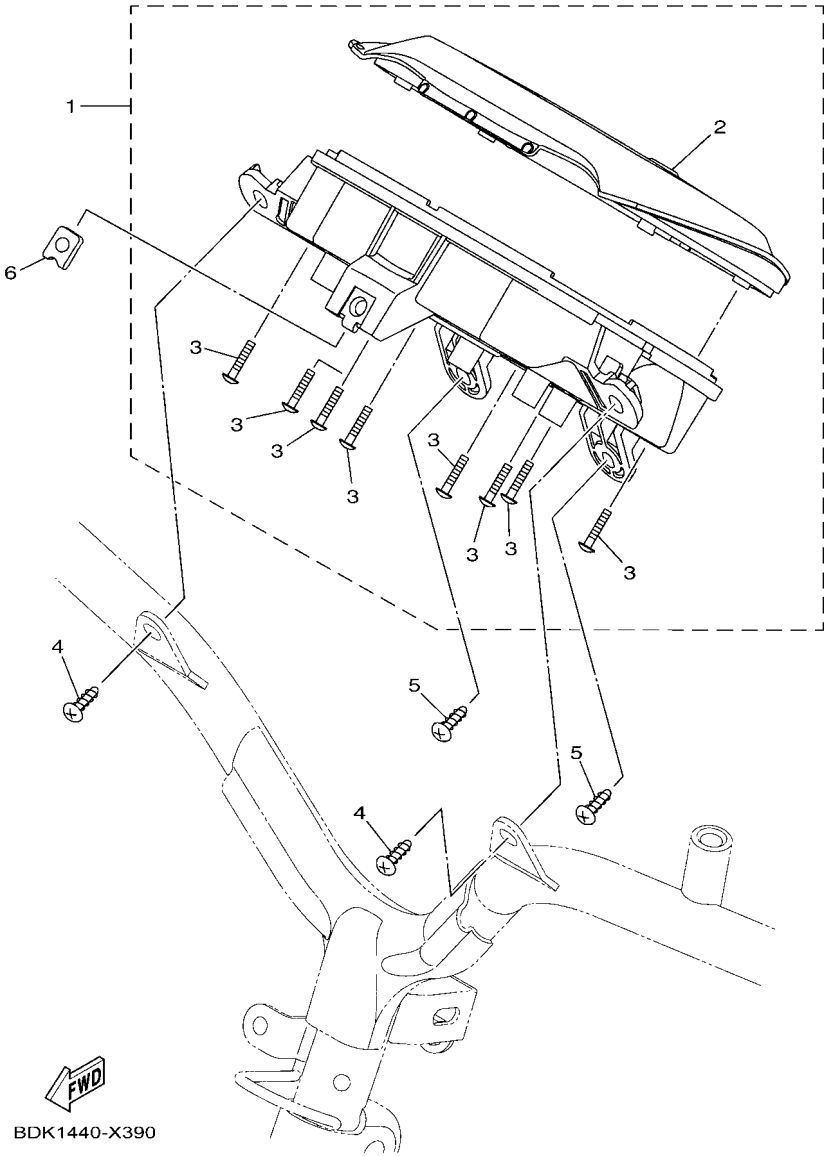

FIG. 39 METER

REF. NO.	PART NO.	DESCRIPTION	BDK1	BDK2				REMARKS
1	BDK–H3500–00	METER ASSY	1	1				
2	B5V–H3571–10	.CASE, SPEEDOMETER UPPER	1	1				
3	97702–30016	.SCREW,TAPPING	8	8				
4	97702–50016	SCREW,TAPPING	2	2				
5	97702–50020	SCREW, TAPPING	2	2				
6	90183–05807	NUT, SPRING	1	1				

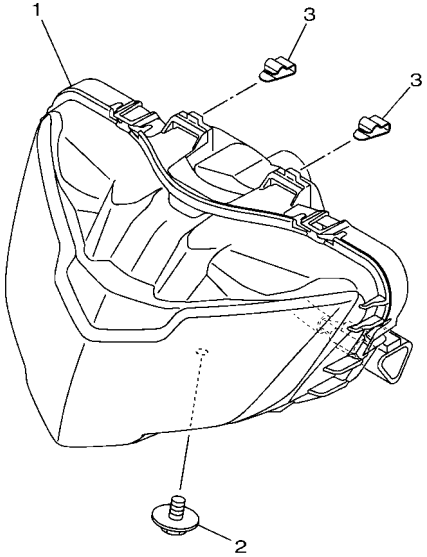

BDK1440-X400

FIG. 40 HEADLIGHT

REF. NO.	PART NO.	DESCRIPTION	BDK1	BDK2				REMARKS
1	BDK–H4310–00	HEADLIGHT UNIT ASSY	1	1				
2	90119–06885	BOLT, WITH WASHER	1	1				
3	31D–H4374–00	CLIP	2	2				

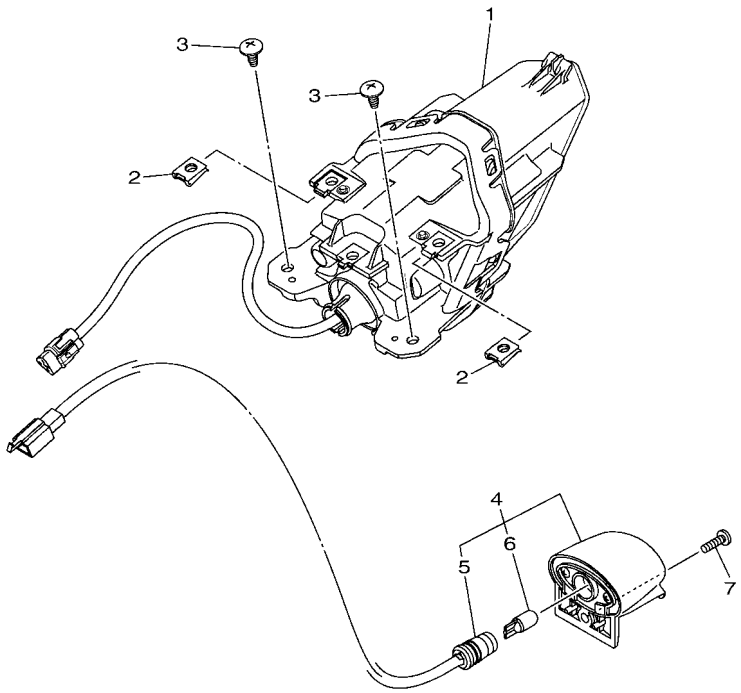

BDK1440-X410

FIG. 41 TAILLIGHT

REF. NO.	PART NO.	DESCRIPTION	BDK1	BDK2				REMARKS
1	B5V–H4710–00	TAILLIGHT UNIT ASSY	1	1				
2	90183–05807	NUT, SPRING	2	2				
3	97702–50012	SCREW, TAPPING	2	2				
4	BDK–H4740–00	LICENSE LIGHT ASSY	1	1				
5	BDK–H4547–00	.CORD, LICENSE LIGHT	1	1				
6	B17–H4744–00	.BULB (12V-5W)	1	1				
7	98907–04016	SCREW, BIND	1	1				

FIG. 42 HANDLE SWITCH & LEVER

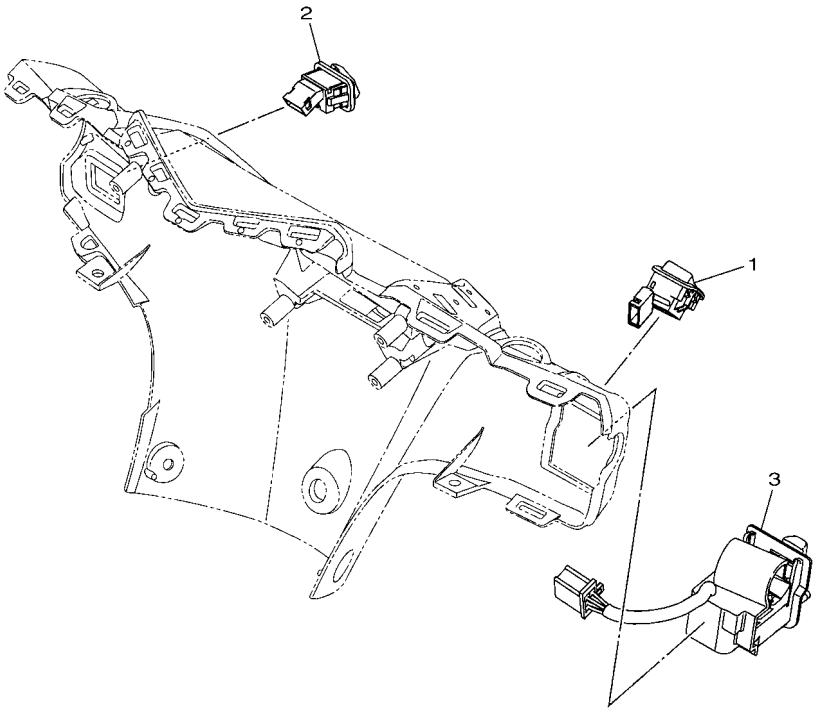

BDK1440-X420

REF. NO.	PART NO.	DESCRIPTION	BDK1	BDK2				REMARKS
1	B5D–H276A–00	DIMMER SWITCH COMP.	1	1				
2	B5D–H279A–00	STARTER SWITCH COMP.	1	1				
3	B5D–H3975–00	SWITCH, HANDLE 2	1	1				

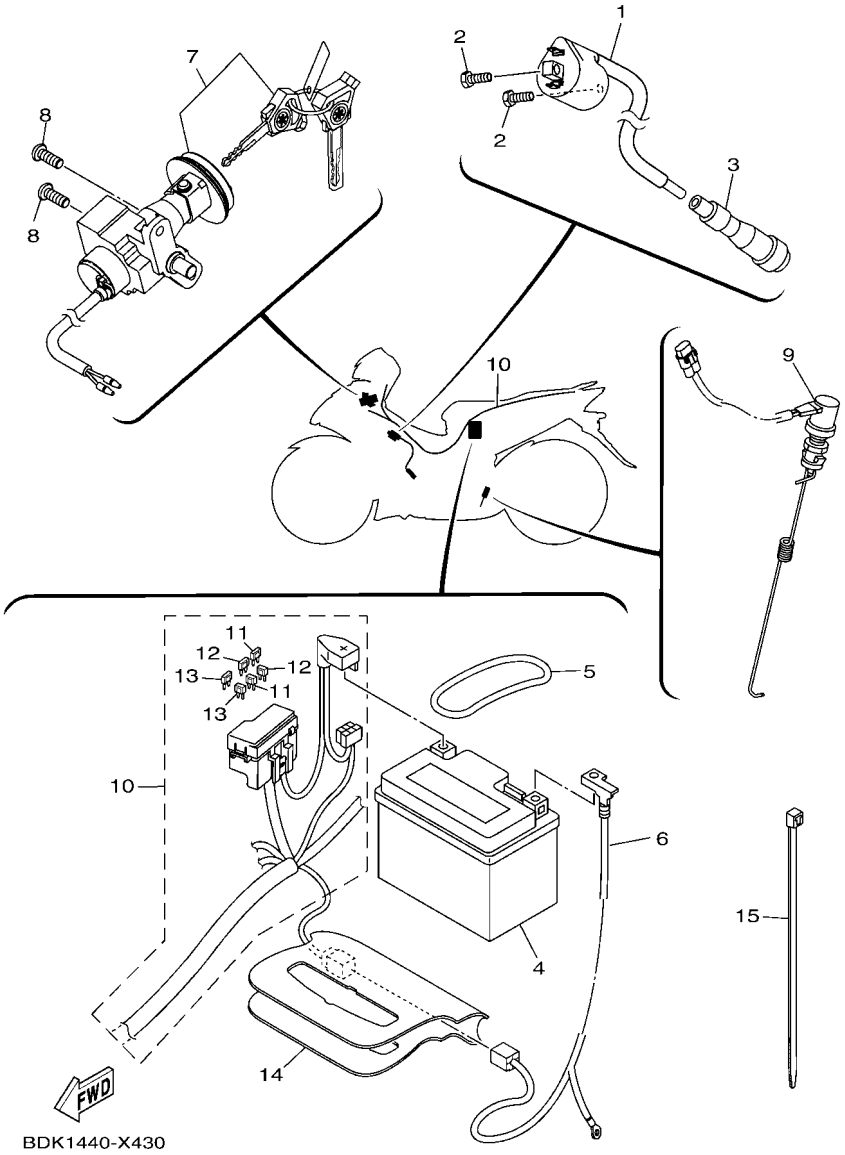

FIG. 43 ELECTRICAL 1

REF. NO.	PART NO.	DESCRIPTION	BDK1	BDK2				REMARKS
1	BDK–H2310–00	IGNITION COIL ASSY	1	1				
2	97002–06016	BOLT, HEXAGON	2	2				
3	2ND–H2370–00	PLUG CAP ASSY	1	1				
4	55D–H2100–00	BATTERY ASSY (PINACO PTZ5S)	1	1				
5	5VW–H2131–00	BAND, BATTERY	1	1				
6	BDK–H2116–00	WIRE, MINUS LEAD	1	1				
7	B17–H252E–00	MAIN SWITCH COMP.	1	1				
8	90111–06162	BOLT,HEX. SOCKET BUTTON	2	2				
9	BDK–H2530–00	STOP SWITCH ASSY	1	1				
10	BDK–H2590–00	WIRE HARNESS ASSY	1	1				
11	BAX–H2151–90	.FUSE (5A)	2	2				
12	2BR–H2151–00	.FUSE (10A)	2	2				
13	BBY–H2151–00	.FUSE (15A)	2	2				
14	BDK–H2599–00	COVER, CONNECTOR	1	1				
15	90464–50801	CLAMP	3	3				

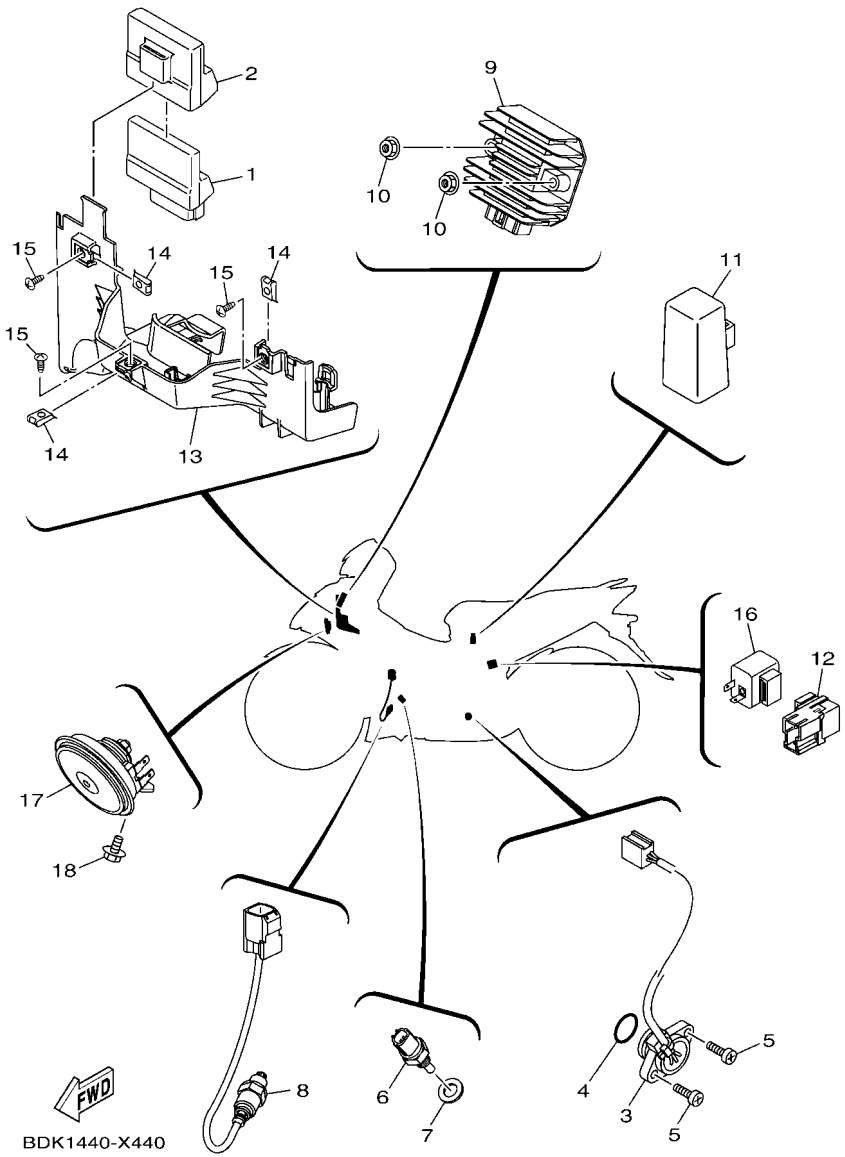

FIG. 44 ELECTRICAL 2

REF. NO.	PART NO.	DESCRIPTION	BDK1	BDK2				REMARKS
1	BDK–H591A–00	ENGINE CONTROL UNIT ASSY	1	1				
2	2PV–H5546–10	BAND	1	1				
3	BDK–H2540–00	NEUTRAL SWITCH ASSY	1	1				
4	93210–21801	O-RING	1	1				
5	98502–05016	SCREW,PAN HEAD	2	2				
6	52B–H3591–00	THERMO UNIT	1	1				
7	90430–10807	GASKET	1	1				
8	2BM–H592A–20	SENSOR, OXYGEN	1	1				
9	2GS–H1960–10	RECTIFIER & REGULATOR ASSY	1	1				
10	95702–06500	NUT, FLANGE	2	2				
11	5TP–H1940–00	STARTER RELAY ASSY	1	1				
12	BK6–H1950–00	RELAY ASSY	1	1				
13	BDK–H2154–00	CASE	1	1				
14	90183–05807	NUT, SPRING	3	3				
15	97702–50012	SCREW, TAPPING	3	3				
16	BDK–H3350–00	FLASHER RELAY ASSY	1	1				
17	BAX–H3371–00	HORN	1	1				
18	95D02–06012	BOLT, FLANGE DEEP RECESS	1	1				

PART NO.	REF. NO.
1S8–11633–01	2 – 10
BDK–14104–00	8 – 15
3GD–25803–00	29 – 6
3RW–25889–00	31 – 9
36Y–2589H–00	31 – 8
5BU–27234–00	33 – 15
BDK–E1102–00	1 – 1
1S8–E111F–00	4 – 8
1S7–E1133–10	1 – 2
55P–E1166–00	8 – 30
1S8–E1181–01	1 – 13
2PV–E1185–00	5 – 4
B17–E1191–00	1 – 6
2PV–E1193–00	1 – 9
1S7–E1196–00	5 – 5
50C–E1311–00	1 – 17
55D–E1351–00	1 – 18
1S8–E1422–00	2 – 6
50C–E1603–00	2 – 12
1S9–E1631–00	2 – 9
1S8–E1651–00	2 – 5
1S7–E1681–20	2 – 3
50C–E1951–00	5 – 8
1S7–E1952–02	5 – 9
2PV–E2111–00	3 – 1
5YP–E2113–00	3 – 4
1PA–E2117–00	3 – 6
3S0–E2118–00	3 – 5
1PA–E2119–00	3 – 3
BDK–E2121–00	3 – 2
55P–E2126–00	3 – 7
2ND–E2151–00	3 – 8
1CK–E2156–00	3 – 14
5YP–E2157–01	4 – 7
2ND–E2159–00	3 – 9
	3 – 12
2ND–E2161–00	3 – 11
21S–E2170–01	4 – 1
5MX–E2210–00	4 – 15
1S8–E2213–01	4 – 17
5MX–E2222–00	4 – 16
1PA–E2231–00	4 – 11
5YP–E2241–00	4 – 12
2PV–E2280–00	4 – 5
1S7–E2288–00	4 – 6
5YP–E2405–00	6 – 7
B48–E2411–00	6 – 1
1S8–E2413–00	6 – 2

PART NO.	REF. NO.
1S7–E2422–00	5 – 1
50C–E2428–00	5 – 3
BDK–E2443–00	6 – 16
BDK–E244E–00	5 – 13
BDK–E244F–00	6 – 4
1S7–E2450–01	5 – 7
5YP–E2461–00	6 – 6
1S8–E2481–00	6 – 18
1S8–E2482–00	6 – 21
5YP–E2576–00	6 – 24
5P0–E2590–00	6 – 10
5YP–E2671–00	6 – 9
5YP–E2675–00	6 – 8
1S7–E3300–00	7 – 1
1S8–E3327–00	7 – 12
1S8–E3329–00	7 – 2
1S8–E3411–00	7 – 5
38B–E3440–01	7 – 8
55D–E3447–10	7 – 9
2FB–E3556–00	8 – 3
BDK–E3557–00	8 – 11
BDK–E3585–00	8 – 2
BDK–E3750–00	8 – 14
BB8–E3761–10	8 – 6
BDK–E3767–00	8 – 13
BDK–E3770–00	8 – 5
BDK–E3907–00	24 – 12
BDK–E3938–00	8 – 9
BDK–E3971–00	24 – 17
54P–E4137–00	8 – 10
54P–E4147–00	8 – 7
5CA–E4147–00	8 – 8
BDK–E4199–00	8 – 1
1S7–E4411–00	8 – 17
1S7–E4412–00	8 – 18
1S7–E4437–00	8 – 24
5TL–E443E–00	8 – 22
2PK–E443H–00	8 – 26
1S7–E4450–00	8 – 19
1S7–E4452–00	8 – 21
BDK–E4453–00	8 – 20
1S8–E4613–00	9 – 5
BDK–E4703–00	9 – 1
55D–E4718–10	9 – 2
29B–E4747–00	9 – 12
55D–E4799–20	9 – 3
5YP–E5113–00	11 – 9
BDK–E5142–00	11 – 18

PART NO.	REF. NO.
1S8–E5150–00	10 – 1
1S8–E5351–00	7 – 4
1S8–E5362–00	11 – 21
5YP–E5377–00	11 – 14
BDK–E5411–00	11 – 1
55D–E5418–10	11 – 10
55D–E5421–00	11 – 15
55D–E5451–00	11 – 2
55D–E5461–00	11 – 16
1S7–E5514–00	12 – 1
1S8–E5521–00	12 – 2
55D–E5524–00	12 – 3
2PV–E5572–00	12 – 8
2PV–E5580–00	12 – 5
2PH–E5583–10	12 – 6
1S8–E5598–00	4 – 14
1ST–E5614–00	12 – 7
1S7–E6116–00	13 – 1
5YP–E6131–00	13 – 4
1S8–E6135–00	13 – 29
5YP–E6143–00	13 – 13
5YP–E6144–00	13 – 7
5YP–E6150–00	13 – 18
1S8–E6181–00	13 – 17
55D–E6182–00	13 – 2
5YP–E6321–00	13 – 21
5YP–E6324–00	13 – 20
5YP–E6331–00	13 – 22
5YP–E6333–00	13 – 26
5HV–E6346–00	16 – 21
5YP–E6351–00	13 – 25
B6F–E6356–00	13 – 32
5YP–E6357–00	13 – 31
5YP–E6371–00	13 – 19
5YP–E6383–00	13 – 23
5YP–E6384–00	13 – 24
5YP–E6512–00	13 – 11
5YP–E6539–00	13 – 5
5YP–E6586–00	13 – 12
5YP–E6611–00	13 – 3
5YP–E6620–00	13 – 9
5YP–E6628–00	13 – 28
5YP–E6777–00	13 – 27
5YP–E7121–00	14 – 6
5YP–E7131–00	14 – 2
5YP–E7141–00	14 – 3
5YP–E7211–00	14 – 22
5YP–E7221–00	14 – 14

PART NO.	REF. NO.
5YP–E7231–00	14 – 21
5YP–E7241–00	14 – 20
5YP–E7411–00	14 – 1
5YP–E7411–10	14 – 1
5YP–E7421–00	14 – 13
1S8–E7456–00	14 – 29
1S8–E7471–00	14 – 11
5YP–E8101–00	16 – 1
55D–E8110–10	16 – 22
5H3–E8113–00	16 – 23
5YP–E8120–00	15 – 8
5YP–E8123–00	15 – 9
1S7–E8127–00	16 – 6
5YP–E8140–00	16 – 7
5YP–E8172–00	16 – 3
1S8–E8173–00	16 – 16
1S7–E8175–00	16 – 9
5YP–E8179–00	16 – 2
1S8–E817A–00	16 – 17
5YP–E8181–00	16 – 4
5YP–E8185–00	15 – 2
BDK–E8186–00	16 – 18
1S7–E8337–00	16 – 10
1S7–E8511–00	15 – 13
1S7–E8512–00	15 – 14
1S8–E8531–00	15 – 11
1S7–E8540–10	15 – 1
5TP–E8542–00	15 – 6
5TN–E8545–00	14 – 16
5YP–E8549–00	15 – 3
5YP–E8561–00	14 – 15
BDK–F1110–00	17 – 1
1S8–F1315–00	17 – 10
1S8–F1316–00	17 – 11
BDK–F133F–00	33 – 19
BDK–F137U–00	34 – 9
	35 – 9
BDK–F137V–00	34 – 16
	35 – 16
1S8–F139X–00	17 – 12
55C–F1511–10–P0	18 – 1
55C–F1511–10–P1	18 – 1
55C–F1511–10–P2	18 – 1
55C–F1511–10–P3	18 – 1
B17–F1568–00	34 – 49
	35 – 49
BDK–F160E–00	18 – 12
BDK–F1611–00	18 – 4

PART NO.	REF. NO.
BDK–F163A–00	18 – 13
BDK–F1668–00	21 – 17
BDK–F1711–00–P0	20 – 1
BDK–F1711–00–P1	19 – 1
BDK–F1711–00–P2	19 – 1
BDK–F1711–00–P3	19 – 1
21C–F1717–00	18 – 7
BDK–F171E–00	19 – 7
	20 – 7
BDK–F1721–00–P0	20 – 4
BDK–F1721–00–P1	19 – 4
BDK–F1721–00–P2	19 – 4
BDK–F1721–00–P3	19 – 4
5P1–F1737–10	34 – 50
	35 – 50
BDK–F173B–00	20 – 22
	20 – 23
BDK–F173E–00	19 – 22
BDK–F173E–10	19 – 22
BDK–F173E–20	19 – 22
BDK–F173F–00	19 – 23
BDK–F173F–10	19 – 23
BDK–F173F–20	19 – 23
BDK–F174G–00	19 – 24
BDK–F174G–10	19 – 24
BDK–F174G–20	19 – 24
BDK–F174G–30	20 – 24
BDK–F174H–00	19 – 25
BDK–F174H–10	19 – 25
BDK–F174H–20	19 – 25
BDK–F174H–30	20 – 25
BDK–F177G–00	19 – 18
	20 – 18
BDK–F1816–00	19 – 16
	20 – 16
BDK–F1817–00	19 – 17
	20 – 17
B5V–F1871–00	19 – 11
	20 – 11
BDK–F1873–00	19 – 14
	20 – 14
5YP–F1875–01	19 – 13
	20 – 13
BDK–F2110–00	21 – 1
5B9–F2123–00	21 – 2
BDK–F2141–00	21 – 6
1S8–F2151–00	21 – 3
55C–F2167–00	29 – 21

PART NO.	REF. NO.
BDK–F2210–00	21 – 14
1S8–F2311–00	21 – 8
BDK–F3100–00	23 – 1
2ND–F3110–00	23 – 8
1FC–F3111–10	23 – 16
BDK–F3126–00	23 – 2
BDK–F3136–00	23 – 5
BDK–F3141–00	23 – 15
5LL–F3144–00	23 – 14
4UV–F3145–00	23 – 3
	23 – 6
2JG–F3147–00	23 – 17
5TF–F3152–00	23 – 11
5P0–F3153–00	23 – 18
5P0–F3156–00	23 – 4
	23 – 7
2ND–F3157–00	23 – 10
509–F3158–L0	23 – 12
5P2–F3170–00	23 – 9
31D–F3181–50	23 – 13
BDK–F3340–00	23 – 19
31B–F3346–00	23 – 21
BDK–F3391–00–P0	34 – 1
	35 – 1
BDK–F3391–00–P1	34 – 1
BDK–F3391–00–P2	34 – 1
4FP–F3411–10	23 – 20
4RT–F3411–10	22 – 4
1KL–F3412–10	22 – 1
4RT–F3412–10	22 – 3
5TL–F3416–01	22 – 6
1P6–F341E–10	22 – 5
5VL–F341E–10	22 – 2
BDK–F3857–00	22 – 8
BDK–F3867–00	22 – 10
BDK–F4110–00	24 – 1
29B–F411B–00	34 – 51
	34 – 52
	35 – 51
	35 – 52
BK6–F414E–00	24 – 3
1DB–F414G–01	24 – 15
BDK–F41B1–00	24 – 8
BDK–F4491–00	24 – 14
4YY–F4610–00	24 – 10
1S9–F4638–01	24 – 5
BDK–F470F–00	25 – 2
BDK–F470F–10	25 – 2

PART NO.	REF. NO.
2WB–F4727–00	25 – 4
BDK–F4730–00	25 – 1
BDK–F4730–10	25 – 1
4HF–F4741–00	25 – 3
55C–F4742–00	33 – 16
B17–F4773–00–P2	25 – 9
B17–F4773–00–P5	25 – 9
B5V–F4780–10	25 – 5
BDK–F478E–00	25 – 8
BDK–F5168–00–33	26 – 1
BDK–F5168–00–P0	26 – 1
3NA–F5181–01	26 – 8
BDK–F518A–00	29 – 3
1DY–F518A–10	27 – 3
5XK–F5338–00–33	28 – 1
5XK–F5338–00–P0	28 – 1
1S8–F5364–00	28 – 5
1S8–F5366–00	28 – 7
55P–F536G–00	29 – 17
BDK–F5377–00	28 – 23
55S–F5381–00	28 – 17
BDK–F5388–00	28 – 21
3YR–F5439–10	28 – 11
BDK–F5689–00	28 – 13
2BM–F5802–00	27 – 5
50C–F5802–00	29 – 5
5YP–F5803–50	27 – 6
2BM–F5805–00	27 – 10
1PA–F5806–00	29 – 10
5P0–F580A–00	31 – 5
BDK–F580U–00	27 – 4
BDK–F580W–00	29 – 4
4S3–F5827–00	29 – 11
B8A–F5827–00	27 – 15
4S3–F5828–00	29 – 12
50C–F582A–00	33 – 5
1FC–F582U–21	27 – 1
55P–F582W–00	29 – 1
50C–F583V–02	33 – 1
2ND–F5852–00	31 – 7
50C–F5852–00	33 – 9
2ND–F5854–00	31 – 6
2VN–F5854–00	33 – 11
2ND–F5855–00	31 – 10
50C–F5855–00	33 – 10
50C–F5866–00	33 – 6
5TL–F5867–11	31 – 11
2ND–F5870–00	31 – 4
BDK–F5872–00	31 – 1
50C–F5873–00	33 – 26
BDK–F5875–00	22 – 12
BDK–F5876–00	22 – 14
50C–F5887–00	21 – 12
50C–F5894–11	33 – 8
50C–F5895–00	33 – 13
50C–F589A–00	33 – 14
55P–F5914–00	29 – 9
55P–F5916–00	29 – 19
2BM–F5917–00	27 – 7
3JD–F5917–00	29 – 14
2BM–F5919–00	27 – 12
4S3–F5919–00	29 – 7
2BM–F5920–00	27 – 14
55P–F5921–00	29 – 15
5YP–F5924–00	27 – 13
5YP–F5925–01	27 – 11
55P–F5933–00	29 – 18
5YP–F5937–00	27 – 8
1UY–F5937–51	29 – 13
55P–F5961–00	29 – 16
BDK–F6110–00	30 – 1
BDK–F6143–00	30 – 4
BDK–F6145–00	30 – 8
BDK–F6216–00–P0	30 – 12
BDK–F6216–00–P1	30 – 12
BDK–F6216–00–P2	30 – 12
BDK–F6216–00–P3	30 – 12
1S8–F622F–00	30 – 25
BDK–F622H–00	30 – 24
B17–F6240–02	30 – 15
1VP–F6241–00	30 – 16
55C–F6246–00	30 – 22
16S–F6257–00	30 – 23
55C–F6259–00	33 – 17
B17–F6280–10	30 – 17
55D–F6281–00	30 – 27
55D–F6282–00	30 – 28
B17–F6290–10	30 – 18
BDK–F6301–00	30 – 19
BDK–F6477–00	30 – 14
BDK–F7111–00	32 – 1
5YP–F7112–00	32 – 3
1S8–F7114–00	32 – 2
BDK–F7211–00	32 – 9
50C–F7222–00	33 – 4
1S7–F7311–00	32 – 11
5TF–F7314–00	32 – 24
	32 – 33
BDK–F7411–00	32 – 15
5LL–F7413–00	32 – 17
5TF–F7424–00	32 – 36
55C–F7430–00–P2	32 – 18
5BU–F7433–00	32 – 20
55C–F7440–00–P2	32 – 27
5BU–F7444–00	32 – 29
5BU–F7445–00	32 – 21
	32 – 30
55C–F7452–00–P2	32 – 19
55C–F7462–00–P2	32 – 28
BDK–F8100–00	25 – 11
55C–F815P–00	25 – 12
BDK–F8321–00	34 – 31
	35 – 31
55D–F8322–00	34 – 41
	35 – 41
BDK–F835U–00–P0	35 – 7
BDK–F835U–00–P1	34 – 7
BDK–F835U–00–P2	34 – 7
BDK–F835V–00–P0	35 – 14
BDK–F835V–00–P1	34 – 14
BDK–F835V–00–P2	34 – 14
BDK–F8365–00	34 – 46
	35 – 46
BDK–F836K–00	34 – 3
	35 – 3
BDK–F836L–00	34 – 21
	35 – 21
BDK–F836M–00	34 – 25
	35 – 25
1S8–F8372–00	24 – 11
BDK–F8385–00	34 – 27
	35 – 27
BDK–F8391–00	34 – 53
BDK–F8391–10	34 – 53
BDK–F8391–20	34 – 53
BDK–F8391–30	35 – 53
BDK–F8392–00	34 – 54
BDK–F8392–10	34 – 54
BDK–F8392–20	34 – 54
BDK–F8392–30	35 – 54
BDK–F8393–00	34 – 55
BDK–F8393–10	34 – 55
BDK–F8393–20	34 – 55
BDK–F8393–30	35 – 55
BDK–F8394–00	34 – 56
BDK–F8394–10	34 – 56
BDK–F8394–20	34 – 56
BDK–F8394–30	35 – 56
BDK–F8395–00	34 – 36
	35 – 36
BDK–F8398–00	34 – 57
BDK–F8398–10	34 – 57
BDK–F8398–20	34 – 57
BDK–F8398–30	35 – 57
BDK–F8399–00	34 – 58
BDK–F8399–10	34 – 58
BDK–F8399–20	34 – 58
BDK–F8399–30	35 – 58
BDK–F839A–00	35 – 59
BDK–F839E–00	35 – 60
BDK–F842M–00	34 – 12
	35 – 12
BDK–F842N–00	34 – 19
	35 – 19
BDK–H1410–00	36 – 2
BDK–H1450–00	36 – 1
BDK–H1800–00	37 – 1
3AY–H1801–00	37 – 2
3AY–H1828–00	37 – 4
BDK–H183G–00	37 – 5
1S7–H1861–00	37 – 3
5TP–H1940–00	44 – 11
BK6–H1950–00	44 – 12
2GS–H1960–10	44 – 9
55D–H2100–00	43 – 4
BDK–H2116–00	43 – 6
5VW–H2131–00	43 – 5
2BR–H2151–00	43 – 12
BBY–H2151–00	43 – 13
BAX–H2151–90	43 – 11
BDK–H2154–00	44 – 13
BDK–H2310–00	43 – 1
2ND–H2370–00	43 – 3
B17–H252E–00	43 – 7
BDK–H2530–00	43 – 9
BDK–H2540–00	44 – 3
BDK–H2590–00	43 – 10
BDK–H2599–00	43 – 14
B5D–H276A–00	42 – 1
B5D–H279A–00	42 – 2
BDK–H3301–00	38 – 1
55D–H3311–00	38 – 2
55D–H3311–00	38 – 10
	38 – 17
1VP–H3318–00	38 – 23
BDK–H3318–00	38 – 7
55D–H3323–00	38 – 12
55D–H332M–00	38 – 19
55D–H3330–01	38 – 9
55D–H3333–00	38 – 14
	38 – 21
55D–H333A–00	38 – 11
55D–H333E–01	38 – 13
55D–H3340–01	38 – 16
55D–H334A–00	38 – 18
55D–H334E–01	38 – 20
BDK–H3350–00	44 – 16
55D–H3358–00	38 – 15
	38 – 22
BAX–H3371–00	44 – 17
BDK–H3500–00	39 – 1
B5V–H3571–10	39 – 2
52B–H3591–00	44 – 6
BDK–H3755–00	26 – 11
2ND–H3922–00	31 – 12
B5D–H3975–00	42 – 3
2DP–H3980–01	31 – 15
BDK–H4310–00	40 – 1
31D–H4374–00	40 – 3
BDK–H4547–00	41 – 5
B5V–H4710–00	41 – 1
BDK–H4740–00	41 – 4
B17–H4744–00	41 – 6
5US–H5110–01	18 – 8
2FC–H5111–00	18 – 10
2PV–H5546–10	44 – 2
BDK–H5752–00	24 – 13
BDK–H591A–00	44 – 1
2BM–H592A–20	44 – 8
50C–W0042–00	33 – 2
4C9–W0048–00	27 – 9
1S8–WE140–13	2 – 1
1S8–WE141–00	2 – 2
1UY–WF048–50	29 – 8
90105–068D6	21 – 10
90105–08850	1 – 10
90105–088D8	17 – 5
90105–088D9	17 – 4
90105–10831	27 – 16
90105–10855	21 – 15
90105–10861	17 – 3
90105–10896	30 – 2
90109–06220	18 – 5
90109–06577	31 – 13
90109–068B4	19 – 12
	19 – 21
	20 – 12
	20 – 21
90109–068C8	34 – 29
	34 – 38
	34 – 47
	35 – 29
	35 – 38
	35 – 47
90109–068D0	34 – 23
	35 – 23
90109–08015	29 – 2
90109–08034	32 – 12
90110–06846	8 – 16
90111–06162	43 – 8
90111–06807	9 – 4
90111–06815	34 – 34
	34 – 44
	35 – 34
	35 – 44
90111–06848	30 – 11
90111–06857	34 – 30
	34 – 39
	35 – 30
	35 – 39
90111–08815	27 – 2
90116–08091	28 – 12
90119–06051	8 – 29
90119–06262	24 – 6
90119–06885	40 – 2
90119–068B7	18 – 2
90149–06829	4 – 13
90160–05009	30 – 9
90163–05803	8 – 25
90170–05803	3 – 10
	3 – 13
90170–06809	28 – 22
90179–08818	17 – 8
90179–10024	17 – 9
90179–12659	13 – 16
90179–14001	13 – 30
90179–25002	22 – 7
90183–04039	18 – 14

PART NO.	REF. NO.
90183–05807	18 – 6
	19 – 2
	19 – 5
	19 – 8
	19 – 20
	20 – 2
	20 – 5
	20 – 8
	20 – 20
	30 – 7
	30 – 10
	34 – 2
	34 – 6
	34 – 8
	34 – 15
	34 – 22
	34 – 37
	35 – 2
	35 – 6
	35 – 8
	35 – 15
	35 – 22
	35 – 37
	39 – 6
	41 – 2
	44 – 14
90183–06023	8 – 28
90185–05803	18 – 11
90185–10011	30 – 3
90185–10022	26 – 9
90185–12804	28 – 18
90201–06021	6 – 15
90201–06069	6 – 13
90201–08066	33 – 24
90201–08609	1 – 11
90201–08612	9 – 11
90201–086P8	32 – 26
	32 – 35
90201–08804	17 – 6
90201–10035	17 – 7
	26 – 10
90201–10118	31 – 3
	33 – 28
90201–10141	9 – 9
90201–12019	13 – 15
	36 – 6
90201–12688	28 – 19
90201–126A7	16 – 15

PART NO.	REF. NO.
90201–12817	16 – 11
90201–14811	32 – 7
90201–15700	14 – 7
	14 – 23
90201–163H8	32 – 4
90201–167P7	13 – 10
90201–25290	12 – 4
90201–26802	14 – 17
90209–17285	14 – 4
90209–18208	14 – 18
90240–08124	33 – 23
90252–23800	32 – 23
	32 – 32
90269–06816	30 – 5
	34 – 10
	34 – 17
	35 – 10
	35 – 17
90280–03017	2 – 8
90338–26136	11 – 25
90340–14824	11 – 7
90387–06063	11 – 13
90387–06158	38 – 3
90387–06804	18 – 3
90387–06857	21 – 5
90387–085E1	33 – 22
90387–08822	9 – 13
90387–09801	34 – 33
	34 – 43
	35 – 33
	35 – 43
90387–09803	21 – 11
90387–10805	32 – 37
90387–10828	26 – 7
90387–123A9	28 – 2
90387–127Y0	28 – 9
90387–12865	28 – 20
90401–10812	31 – 2
	33 – 27
90430–06803	1 – 4
	1 – 8
	1 – 20
90430–10807	44 – 7
90450–27806	6 – 19
	6 – 22
90450–43805	8 – 33
90462–08817	11 – 6
90464–50801	43 – 15

PART NO.	REF. NO.
90467–10038	6 – 25
90467–12085	33 – 12
90467–12800	8 – 23
90467–13064	8 – 32
90467–13802	8 – 27
90467–13858	8 – 31
90467–22801	6 – 20
	6 – 23
90480–01803	6 – 17
90480–01868	5 – 14
	6 – 5
	17 – 13
90480–13398	34 – 4
	35 – 4
90480–13808	11 – 12
90480–14023	38 – 4
90480–15363	6 – 11
90480–18418	34 – 32
	34 – 42
	35 – 32
	35 – 42
90480–18814	24 – 4
90501–04801	13 – 14
90501–06022	15 – 7
90501–06800	15 – 12
90501–125E9	16 – 14
90501–18576	7 – 6
90506–20041	32 – 10
90506–23809	32 – 14
90506–35812	32 – 6
90508–29007	15 – 10
90520–02807	19 – 19
	20 – 19
90520–02818	24 – 2
90560–08326	24 – 7
90560–10292	26 – 2
91312–06014	12 – 9
91312–06100	1 – 16
91312–08016	33 – 21
91312–08020	33 – 20
91312–08025	32 – 25
	32 – 34
91312–10100	17 – 2
91317–06025	15 – 4
	31 – 16
91317–06030	30 – 26
91332–05010	24 – 16
91332–06016	4 – 18

PART NO.	REF. NO.
91332–06016	36 – 4
91332–06020	8 – 4
91332–06025	36 – 3
91401–16012	33 – 25
91401–30030	32 – 5
	32 – 8
91702–08042	32 – 22
	32 – 31
91A20–05045	24 – 9
92012–05016	30 – 20
92017–05025	7 – 3
93101–10843	11 – 23
93102–12891	16 – 5
93102–20892	14 – 27
93103–10801	5 – 2
93106–20816	26 – 3
93106–20825	28 – 6
93106–26815	28 – 8
93210–068E9	16 – 19
93210–09805	4 – 2
93210–14899	11 – 8
93210–15620	33 – 7
93210–19809	5 – 17
	11 – 22
93210–21801	44 – 4
93210–26805	37 – 6
93210–34801	7 – 7
93210–41041	28 – 4
93210–59800	7 – 11
93210–84801	5 – 6
93306–000Y3	5 – 10
93306–001X2	4 – 3
93306–002X8	14 – 25
93306–004XB	28 – 10
93306–004XR	14 – 9
93306–204X9	14 – 26
93306–300YF	26 – 4
93306–301YM	28 – 3
93306–305X7	2 – 7
93310–325X1	12 – 10
93310–528X7	2 – 4
93340–212Y2	16 – 12
933A6–202X0	14 – 10
93410–20809	14 – 5
93410–22820	14 – 19
93450–16115	2 – 11
93503–16807	13 – 33
93602–08810	13 – 6

PART NO.	REF. NO.
93604–10837	16 – 13
93604–12831	15 – 5
93605–06800	4 – 4
93822–15811	14 – 28
93900–00817	26 – 6
	28 – 16
94107–17873	26 – 5
94108–17868	28 – 15
94568–84113	28 – 24
94568–A8096	4 – 10
94668–84001	28 – 25
94700–00884	1 – 12
95022–06012	30 – 21
95027–06012	5 – 12
95027–06025	5 – 11
95301–08700	33 – 3
95307–08700	32 – 13
95602–06100	31 – 14
95602–08200	28 – 14
95602–10200	21 – 16
95612–08630	1 – 5
95612–12100	21 – 7
95702–06500	38 – 5
	44 – 10
95702–12500	36 – 5
95707–05500	18 – 9
95707–06500	16 – 20
95707–08500	9 – 6
95707–10500	9 – 8
95802–06025	33 – 18
95807–06020	34 – 35
	34 – 45
	35 – 35
	35 – 45
95807–06025	11 – 11
95807–08035	9 – 10
95812–06030	8 – 12
95827–06014	16 – 8
95827–06016	6 – 12
95827–10045	9 – 7
95D02–06012	21 – 4
	22 – 9
	22 – 11
	22 – 13
	22 – 15
	38 – 8
	44 – 18
95D02–06020	6 – 14

PART NO.	REF. NO.
95D32–06010	21 – 13
95D32–06014	21 – 9
95D32–06020	25 – 10
95D32–08016	32 – 16
95D32–10035	29 – 20
95E32–06010	1 – 3
	1 – 19
	4 – 9
	14 – 30
95E32–06012	7 – 13
	25 – 6
95E32–06020	1 – 7
	6 – 3
	7 – 10
95E32–06025	5 – 15
95E32–06040	11 – 4
	11 – 19
95E32–06045	10 – 5
95E32–06050	5 – 16
	10 – 4
	11 – 5
	11 – 20
95E32–06060	10 – 3
	11 – 24
97002–06016	43 – 2
97027–08020	16 – 24
97527–05512	25 – 7
97602–04312	31 – 17
97702–30016	39 – 3
97702–50012	19 – 10
	20 – 10
	34 – 5
	34 – 13
	34 – 20
	34 – 26
	35 – 5
	35 – 13
	35 – 20
	35 – 26
	41 – 3
	44 – 15
97702–50016	30 – 6
	30 – 13
	38 – 6
	39 – 4
97702–50020	39 – 5
97707–50012	19 – 3
	19 – 6

PART NO.	REF. NO.
97707–50012	19 – 9
	20 – 3
	20 – 6
	20 – 9
	34 – 11
	34 – 18
	34 – 28
	34 – 40
	34 – 48
	35 – 11
	35 – 18
	35 – 28
	35 – 40
	35 – 48
97707–50016	34 – 24
	35 – 24
98502–05016	44 – 5
98507–05025	30 – 29
98512–06012	14 – 12
98517–05010	19 – 15
	20 – 15
98907–04016	41 – 7
99009–15400	14 – 8
	14 – 24
99009–28400	13 – 8
99530–10114	1 – 14
	1 – 15
	10 – 2
	11 – 3
	11 – 17