YAMAHA

# PARTS CATALOGUE

MBM3

# T155 ( BAX2 ) MALAYSIA DOXOU

YAMAHA GENUINE Parts & Accessories

1XBAX-440E1

(  )

T155
PARTS CATALOGUE
©2021 by Yamaha Motor Co., Ltd.
1st edition, June 2021
All rights reserved.
Any reprinting or unauthorized use
without the written permission of
Yamaha Motor Co., Ltd.
is expressly prohibited.
Printed in Japan.

# FOREWORD

This Parts Catalogue is related to the parts for the model(s) on the cover page. When you are ordering replacement parts, please refer to this Parts Catalogue and quote both part numbers and part names correctly.

1. Modifications or additions which have been made after the issue of the Parts Catalogue will be announced in the Parts News.
   It is advisable that you make the necessary corrections to the Parts Catalogue according to the Parts News.

2. Abbreviations
   The following abbreviations are used in this Parts Catalogue.

   "UR" Use specified parts number.

   "UN" Use as many as needed.

   "AP" Alternate Parts

   "LM" Locally Made (Parts need to be ordered locally)

   "F#" Frame No. (Applicable machine No.)

   "O/S" Over Size

3. The number of components for assembly
   - Parts, which are to be supplied in an assembly, are listed with a dot (.) in front of the part name as shown below.
   - The numeral appearing to the right of each component part indicates the quantity of parts for each assembly unit.

| PART NO. | DESCRIPTION | Q'TY | REMARKS |
|---|---|---|---|
| 2F5–83310–60 | FRONT FLASHER LIGHT ASSY | 2 | |
| 115–83311–60 | .BULB (6V–18W) | 1 | |

4. Applicable colours of graphics are represented in the "REMARKS" as shown below.

| PART NO. | DESCRIPTION | Q'TY | REMARKS |
|---|---|---|---|
| 2N4–24110–00–X5 | FUEL TANK COMP. | 2 | MXR |
| 3J1–24240–10 | .GRAPHIC, FUEL TANK | 1 | FOR MXR |

5. Note that the illustrations for reference in finding parts numbers are not to be used for assembling. When assembling, please use the applicable service manual.

6. The asterisk (*) before a reference number indicates modified items after the first edition.

7. Applicable Serial No.

Frame Serial No.

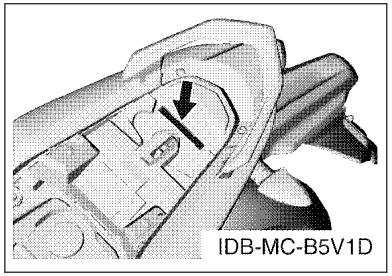


Engine Serial No.

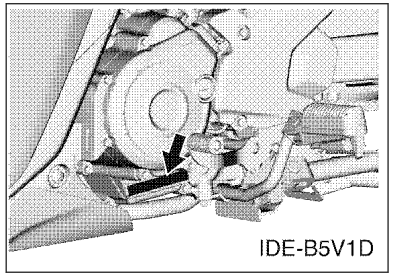


8. Applicable Colour Code (The (*) mark shows Model colour.)

| Abbreviation | Colour Name | Colour Code |
|---|---|---|
| MBL2 | MAT BLACK 2 | 0582 |
| MBM3(*) | MAT BLUE METALLIC 3 | 0960 |
| MVBS1 | MAT VIVID BLUE SOLID 1 | 1745 |
| SMX | BLACK METALLIC X | 0903 |
| VYRS6 | VIVID YELLOWISH RED SOLID 6 | 1699 |
| | | |
| | | |
| | | |
| | | |
| | | |

9. Applicable Starting Serial No.

Frame Serial No.

| Serial No. | Name Of Q'ty Column | Model Code |
|---|---|---|
| | | |
| | | |
| | | |
| | | |
| | | |

Engine Serial No.

| Serial No. | Name Of Q'ty Column | Model Code |
|---|---|---|
| | | |
| | | |
| | | |
| | | |
| | | |

# CONTENTS

## ENGINE

CYLINDER HEAD....1
CRANKSHAFT & PISTON....3
VALVE....4
CAMSHAFT & CHAIN....5
WATER PUMP....6
RADIATOR & HOSE....7
OIL PUMP....8
INTAKE....9
EXHAUST....11
CRANKCASE....12
CRANKCASE COVER 1....13
STARTER CLUTCH....14
CLUTCH....15
TRANSMISSION....17
SHIFT CAM & FORK....18
SHIFT SHAFT....19

## CHASSIS

FRAME....20
FENDER....21
SIDE COVER....22
REAR ARM & SUSPENSION....24
STEERING....25
FRONT FORK....26
FUEL TANK....28
SEAT....29
FRONT WHEEL....30
FRONT BRAKE CALIPER....31
REAR WHEEL....32
REAR BRAKE CALIPER....33
STEERING HANDLE & CABLE....34
FRONT MASTER CYLINDER....36
STAND & FOOTREST....37
REAR MASTER CYLINDER....39
LEG SHIELD....41
GENERATOR....44
STARTING MOTOR....45
FLASHER LIGHT....46
METER....47
HEADLIGHT....48
TAILLIGHT....49
HANDLE SWITCH & LEVER....50
ELECTRICAL 1....51
ELECTRICAL 2....53

## INDEX

NUMERICAL INDEX....54

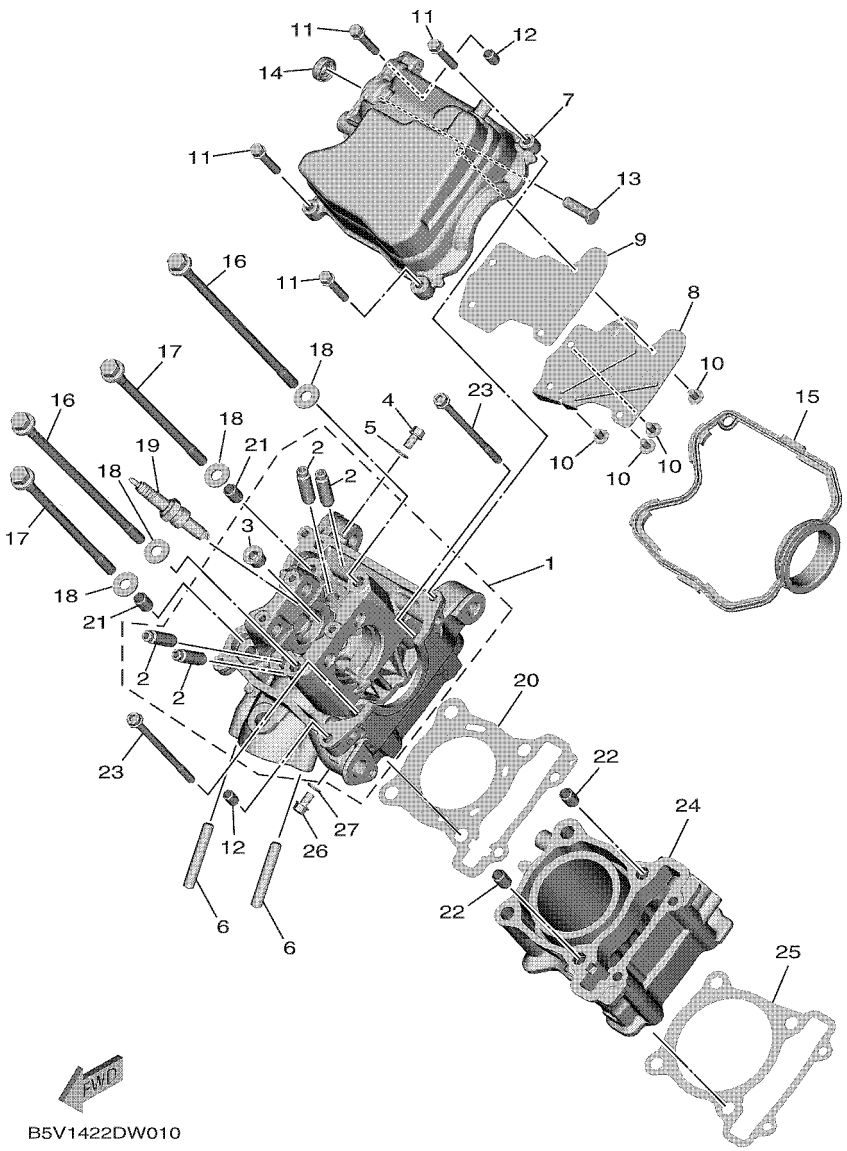


## FIG. 1 CYLINDER HEAD

| REF. NO. | PART NO. | DESCRIPTION | BAX2 | | | | | REMARKS |
|---|---|---|---|---|---|---|---|---|
| 1 | BAX–E1102–00 | CYLINDER HEAD ASSY | 1 | | | | | |
| 2 | B63–E1133–10 | .GUIDE, VALVE 1 | 4 | | | | | |
| 3 | 90340–12813 | .PLUG, STRAIGHT SCREW | 1 | | | | | |
| 4 | 95E32–06010 | BOLT, FLANGE DEEP RECESS | 1 | | | | | |
| 5 | 90430–06803 | GASKET | 1 | | | | | |
| 6 | 95612–08635 | BOLT, STUD | 2 | | | | | |
| 7 | B5V–E1191–00 | COVER, CYLINDER HEAD 1 | 1 | | | | | |
| 8 | B5V–E1165–00 | PLATE, BREATHER | 1 | | | | | |
| 9 | B5V–E1169–00 | GASKET, BREATHER COVER | 1 | | | | | |
| 10 | 90149–05801 | SCREW | 4 | | | | | |
| 11 | 95E32–06030 | BOLT, FLANGE DEEP RECESS | 4 | | | | | |
| 12 | 99530–08012 | PIN, DOWEL | 2 | | | | | |
| 13 | BAX–E132G–00 | ROD 1 | 1 | | | | | UR |
| | B5V–E132G–00 | ROD 1 | 1 | | | | | UR |
| 14 | 93102–08800 | OIL SEAL | 1 | | | | | |
| 15 | B3F–E1193–00 | GASKET, HEAD COVER 1 | 1 | | | | | |
| 16 | 90105–088J0 | BOLT, FLANGE | 2 | | | | | |
| 17 | 90105–088H9 | BOLT, FLANGE | 2 | | | | | |
| 18 | 90201–08859 | WASHER, PLATE | 4 | | | | | |
| 19 | 94700–00415 | PLUG, SPARK (NGK CPR8EA) | 1 | | | | | |
| 20 | 2DP–E1181–00 | GASKET, CYLINDER HEAD 1 | 1 | | | | | |
| 21 | 91810–14808 | PIN, DOWEL | 2 | | | | | |
| 22 | 91810–14808 | PIN, DOWEL | 2 | | | | | |
| 23 | 90110–06894 | BOLT, HEXAGON SOCKET HEAD | 2 | | | | | |
| 24 | B5V–E1311–00 | CYLINDER 1 | 1 | | | | | |
| 25 | B0T–E1351–00 | GASKET, CYLINDER | 1 | | | | | |
| 26 | 95E32–06010 | BOLT, FLANGE DEEP RECESS | 1 | | | | | |

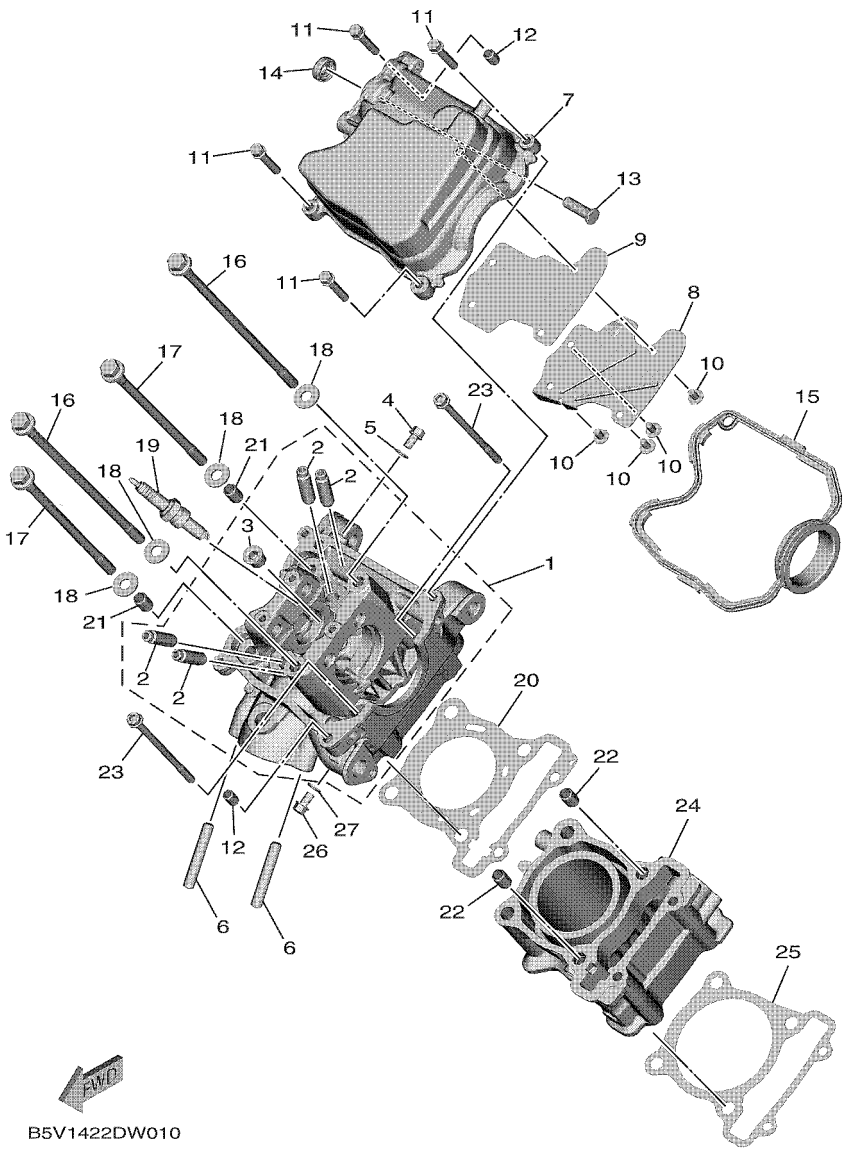


## FIG. 1 CYLINDER HEAD

| REF. NO. | PART NO. | DESCRIPTION | BAX2 | | | | | REMARKS |
|---|---|---|---|---|---|---|---|---|
| 27 | 90430–06803 | GASKET | 1 | | | | | |

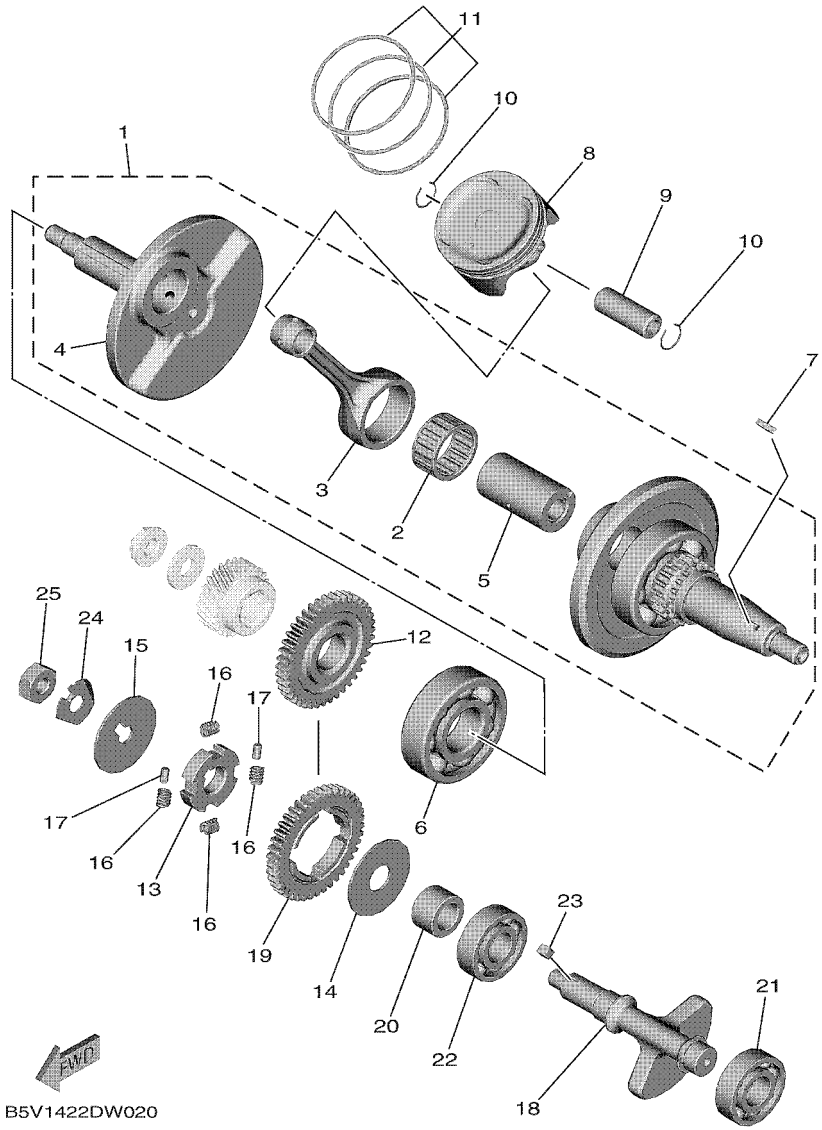


## FIG. 2 CRANKSHAFT & PISTON

| REF. NO. | PART NO. | DESCRIPTION | BAX2 | | | | | REMARKS |
|---|---|---|---|---|---|---|---|---|
| 1 | B5V–WE140–00 | CRANKSHAFT ASSY | 1 | | | | | |
| 2 | 93310–526YT | .BEARING | 1 | | | | | |
| 3 | B5V–E1651–00 | .ROD, CONNECTING | 1 | | | | | |
| 4 | B5V–E1422–00 | .CRANK 2 | 1 | | | | | |
| 5 | BK6–E1681–00 | .PIN, CRANK 1 | 1 | | | | | |
| 6 | 93306–355Y8 | BEARING | 1 | | | | | |
| 7 | 90280–03017 | KEY, WOODRUFF | 1 | | | | | |
| 8 | B5V–E1631–00 | PISTON (STD) | 1 | | | | | |
| 9 | 5YP–E1633–00 | PIN, PISTON | 1 | | | | | |
| 10 | 93450–15175 | CIRCLIP | 2 | | | | | |
| 11 | B5V–E1603–00 | PISTON RING SET (STD) | 1 | | | | | |
| 12 | 2ND–E1536–00 | GEAR, DRIVE | 1 | | | | | |
| 13 | 2ND–E1496–00 | BOSS, BUFFER | 1 | | | | | |
| 14 | 90201–15821 | WASHER, PLATE | 1 | | | | | |
| 15 | 90214–10800 | WASHER, CLAW | 1 | | | | | |
| 16 | 90501–16800 | SPRING, COMPRESSION | 4 | | | | | |
| 17 | 93604–08071 | PIN, DOWEL | 2 | | | | | |
| 18 | BAX–E1454–00 | WEIGHT 1 | 1 | | | | | |
| 19 | 2ND–E1531–10 | GEAR, BALANCE WEIGHT | 1 | | | | | |
| 20 | 90387–15810 | COLLAR | 1 | | | | | |
| 21 | 93306–253YM | BEARING | 1 | | | | | |
| 22 | 93306–253YM | BEARING | 1 | | | | | |
| 23 | 90282–05031 | KEY, STRAIGHT | 1 | | | | | |
| 24 | 90215–10803 | WASHER, LOCK | 1 | | | | | |
| 25 | 90170–10012 | NUT | 1 | | | | | |

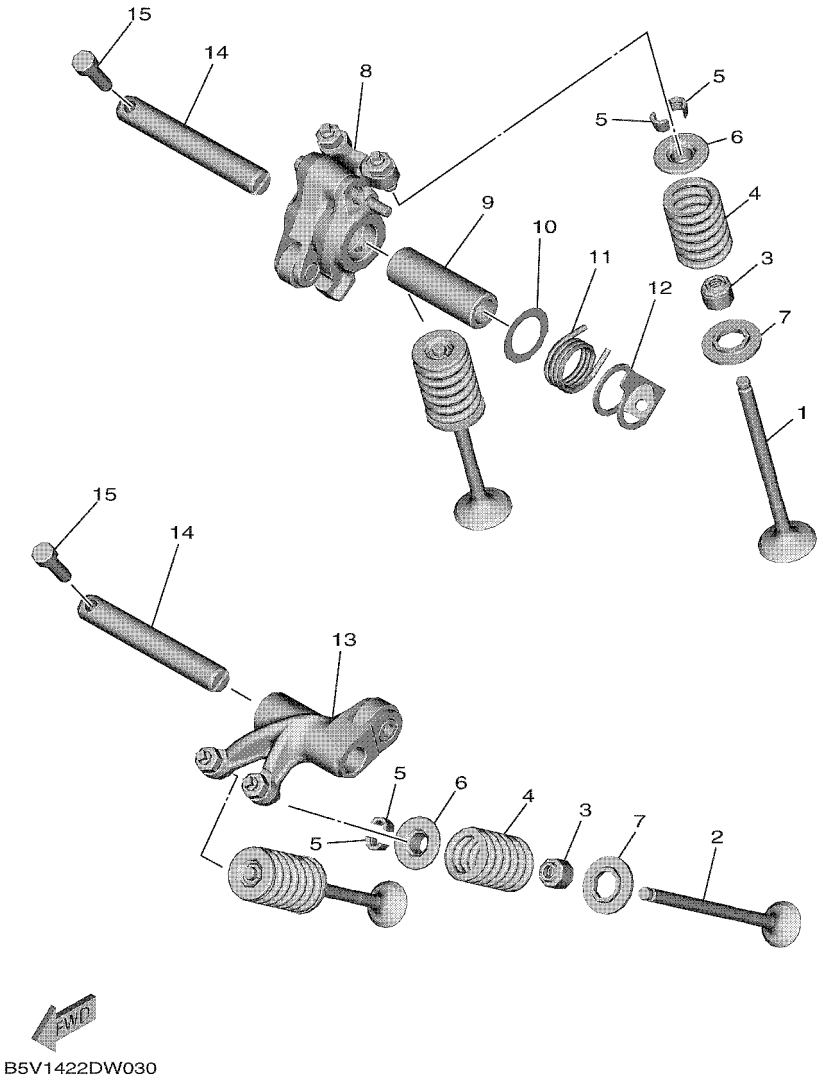


## FIG. 3 VALVE

| REF. NO. | PART NO. | DESCRIPTION | BAX2 | | | | | REMARKS |
|---|---|---|---|---|---|---|---|---|
| 1 | B5V–E2111–01 | VALVE, INTAKE | 2 | | | | | |
| 2 | B5V–E2121–00 | VALVE, EXHAUST | 2 | | | | | |
| 3 | B63–E2119–00 | SEAL, VALVE STEM | 4 | | | | | |
| 4 | B63–E2113–00 | SPRING, VALVE INNER | 4 | | | | | |
| 5 | 5TL–E2118–00 | LOCK, VALVE SPRING RETAINER | 8 | | | | | |
| 6 | B63–E2117–01 | RETAINER, VALVE SPRING | 2 | | | | | |
| 7 | 55P–E2126–00 | SEAT, VALVE SPRING 2 | 4 | | | | | |
| 8 | B5V–E2150–00 | VALVE ROCKER ARM ASSY | 1 | | | | | |
| 9 | BAX–E2166–00 | SHAFT, ROCKER 3 | 1 | | | | | UR |
| | B5V–E2166–10 | SHAFT, ROCKER 3 | 1 | | | | | UR |
| 10 | B5V–E1557–00 | WASHER 1 | 1 | | | | | |
| 11 | BK6–E2226–00 | SPRING, COIL | 1 | | | | | |
| 12 | BAX–E2279–00 | PLATE | 1 | | | | | |
| 13 | B5V–E2160–01 | VALVE ROCKER ARM ASSY 2 | 1 | | | | | |
| 14 | BAX–E2156–00 | SHAFT, ROCKER 2 | 2 | | | | | UR |
| | B5V–E2156–00 | SHAFT, ROCKER 2 | 2 | | | | | UR |
| 15 | 91312–05016 | BOLT, HEXAGON SOCKET HEAD | 2 | | | | | |

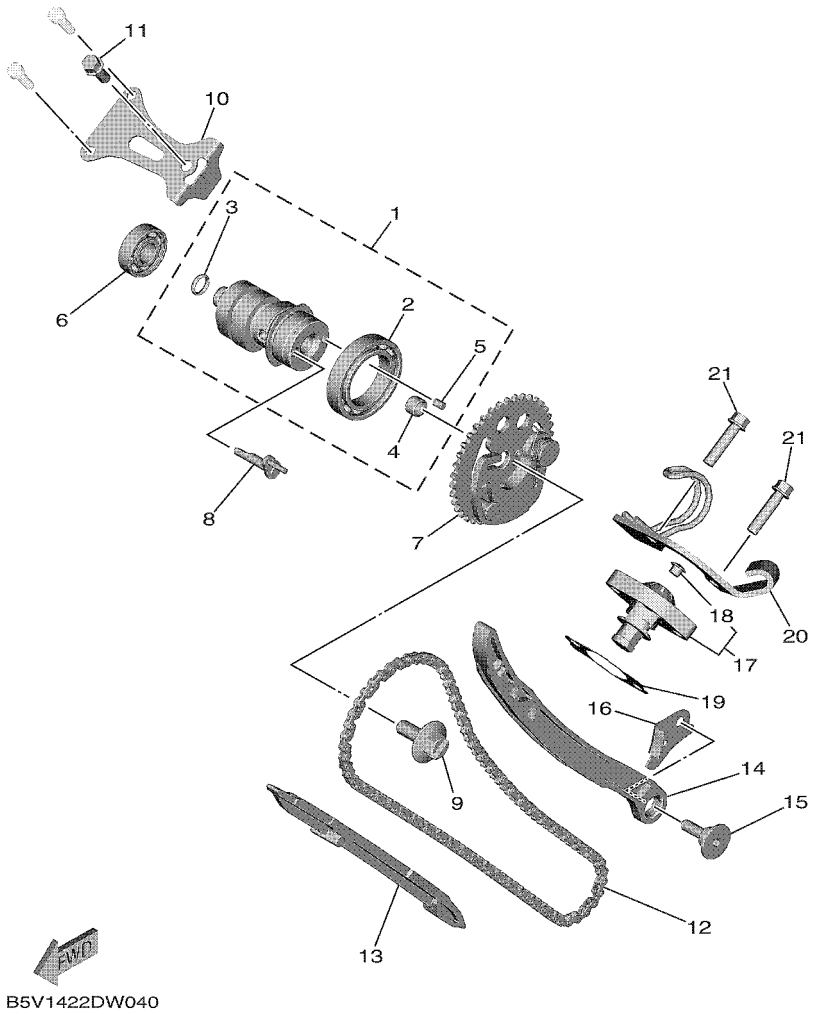


## FIG. 4 CAMSHAFT & CHAIN

| REF. NO. | PART NO. | DESCRIPTION | BAX2 | | | | | REMARKS |
|---|---|---|---|---|---|---|---|---|
| 1 | BAX–E2170–00 | CAMSHAFT ASSY 1 | 1 | | | | | |
| 2 | 93306–906X4 | .BEARING | 1 | | | | | |
| 3 | 93210–09807 | .O-RING | 1 | | | | | |
| 4 | 91810–07804 | .PIN, DOWEL | 1 | | | | | |
| 5 | 93604–06083 | .PIN, DOWEL | 1 | | | | | |
| 6 | 93306–001YL | BEARING | 1 | | | | | |
| 7 | B3M–E2280–00 | DECOMPRESSION ASSY | 1 | | | | | |
| 8 | B6H–E2288–01 | CAM, DECOMPRESSION | 1 | | | | | |
| 9 | B63–E2157–00 | BOLT | 1 | | | | | |
| 10 | BAX–E111F–00 | PLATE | 1 | | | | | |
| 11 | 95E32–06014 | BOLT, FLANGE DEEP RECESS | 1 | | | | | |
| 12 | 94568–J9096 | CHAIN | 1 | | | | | |
| 13 | B63–E2231–00 | GUIDE, STOPPER 1 | 1 | | | | | |
| 14 | B5V–E2241–00 | GUIDE, STOPPER 2 | 1 | | | | | |
| 15 | 1DR–E2228–00 | BOLT | 1 | | | | | |
| 16 | BAX–E2256–00 | COVER, CHAIN | 1 | | | | | |
| 17 | 2ND–E2210–20 | TENSIONER ASSY, CAM CHAIN | 1 | | | | | |
| 18 | 5MX–E2222–00 | .PLUG | 1 | | | | | |
| 19 | BAX–E2213–00 | GASKET, TENSIONER CASE | 1 | | | | | |
| 20 | B5V–E5441–00 | HOLDER, CLUTCH CABLE | 1 | | | | | |
| 21 | 95E32–06025 | BOLT, FLANGE DEEP RECESS | 2 | | | | | |

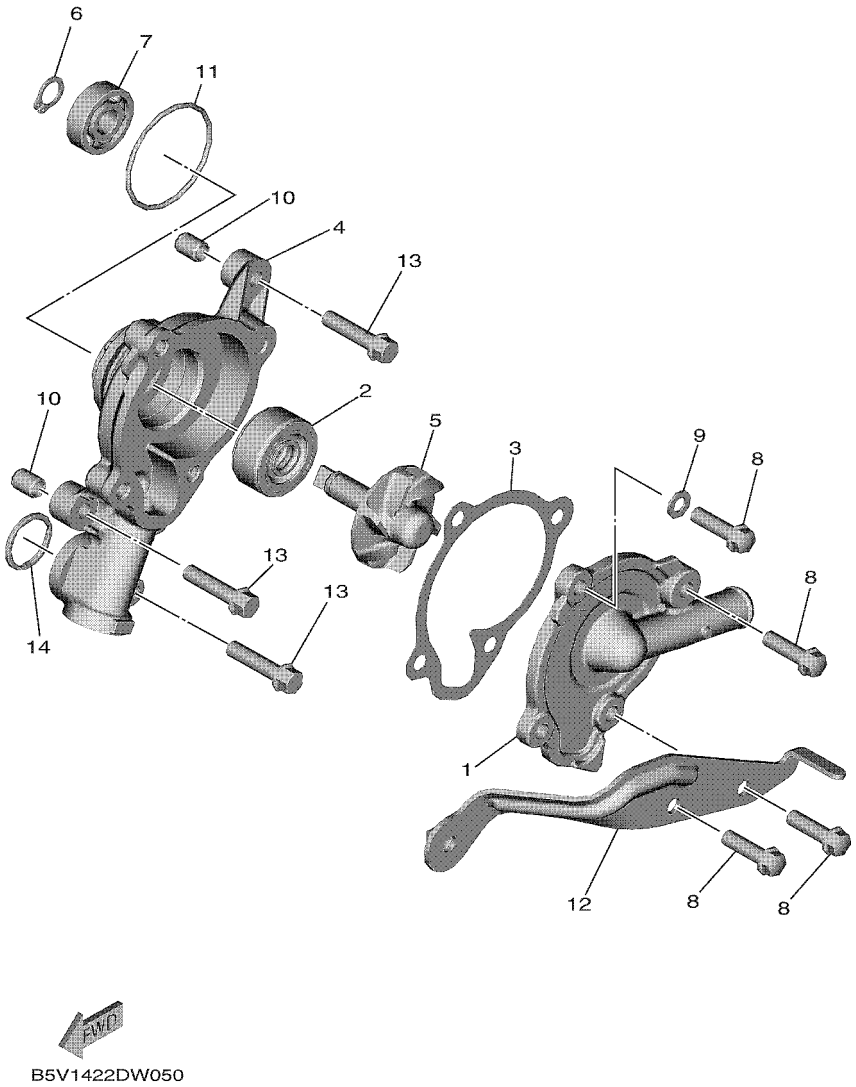


## FIG. 5 WATER PUMP

| REF. NO. | PART NO. | DESCRIPTION | BAX2 | | | | | REMARKS |
|---|---|---|---|---|---|---|---|---|
| 1 | BT3–E2422–00 | COVER, HOUSING | 1 | | | | | |
| 2 | 93103–10801 | OIL SEAL | 1 | | | | | |
| 3 | 2DP–E2428–00 | GASKET, HOUSING COVER 2 | 1 | | | | | |
| 4 | B63–E1185–01 | COVER, CYLINDER HEAD SIDE 3 | 1 | | | | | |
| 5 | 2DP–E2450–00 | IMPELLER SHAFT ASSY | 1 | | | | | |
| 6 | 99009–10400 | CIRCLIP | 1 | | | | | |
| 7 | 93306–000Y3 | BEARING | 1 | | | | | |
| 8 | 95027–06020 | BOLT, FLANGE | 4 | | | | | |
| 9 | 90430–06803 | GASKET | 1 | | | | | |
| 10 | 99530–08012 | PIN, DOWEL | 2 | | | | | |
| 11 | 93210–39803 | O-RING | 1 | | | | | |
| 12 | B5V–E2443–10 | STAY | 1 | | | | | |
| 13 | 95E32–06025 | BOLT, FLANGE DEEP RECESS | 3 | | | | | |
| 14 | 93210–19809 | O-RING | 1 | | | | | |

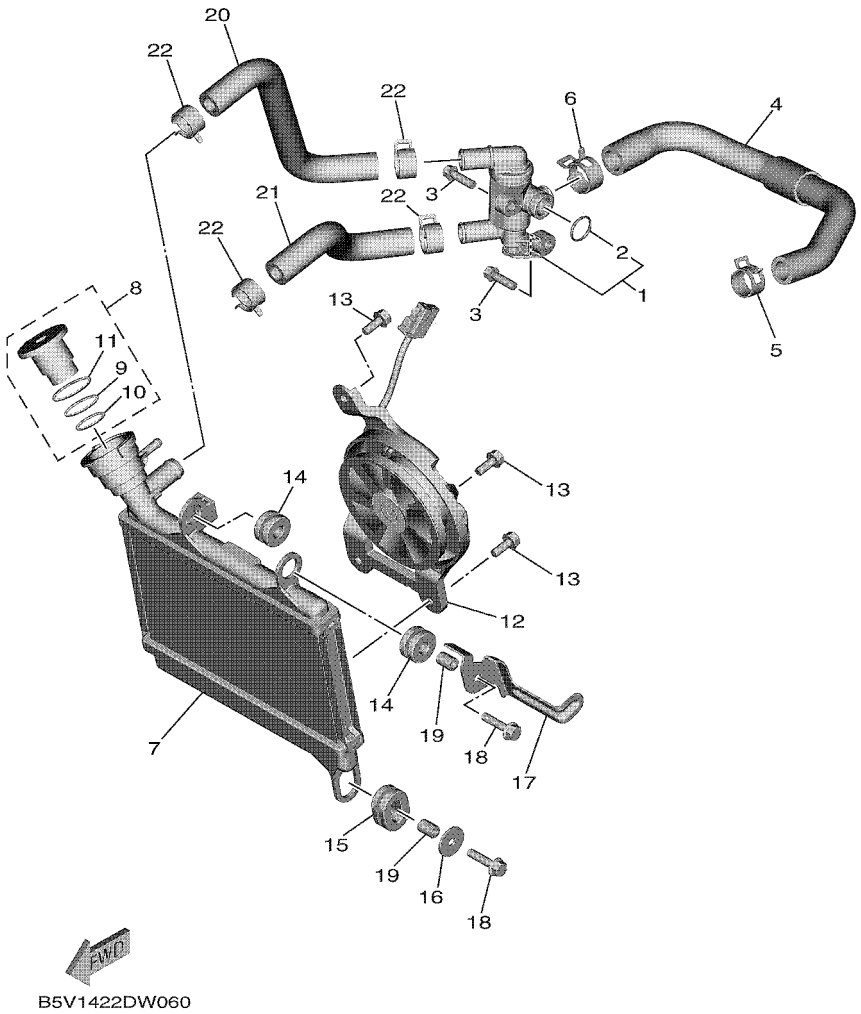


## FIG. 6 RADIATOR & HOSE

| REF. NO. | PART NO. | DESCRIPTION | BAX2 | | | | | REMARKS |
|---|---|---|---|---|---|---|---|---|
| 1 | BK6–E2410–00 | THERMOSTAT ASSY | 1 | | | | | |
| 2 | 52S–12439–00 | .O-RING | 1 | | | | | |
| 3 | 95E32–06020 | BOLT, FLANGE DEEP RECESS | 2 | | | | | |
| 4 | B5V–E2483–00 | PIPE 3 | 1 | | | | | |
| 5 | 90467–19803 | CLIP | 1 | | | | | |
| 6 | 90467–20806 | CLIP | 1 | | | | | |
| 7 | B5V–E2461–00 | RADIATOR COMP | 1 | | | | | |
| 8 | B65–E2462–02 | CAP, RADIATOR | 1 | | | | | |
| 9 | B65–E2439–00 | .O-RING | 1 | | | | | |
| 10 | B65–E2843–00 | .O-RING | 1 | | | | | |
| 11 | B63–E22A2–00 | .O-RING | 1 | | | | | |
| 12 | B5V–E2405–00 | BLOWER ASSY | 1 | | | | | |
| 13 | 5YP–E2675–00 | BOLT, BLOWER HOLDING | 3 | | | | | |
| 14 | 90480–15808 | GROMMET | 2 | | | | | |
| 15 | 90480–01803 | GROMMET | 1 | | | | | |
| 16 | 90201–06880 | WASHER, PLATE | 1 | | | | | |
| 17 | BAX–E244E–00 | BRACKET 1 | 1 | | | | | |
| 18 | 95D32–06025 | BOLT, FLANGE DEEP RECESS | 2 | | | | | |
| 19 | 90387–06144 | COLLAR | 2 | | | | | |
| 20 | BAX–E2481–00 | PIPE 1 | 1 | | | | | |
| 21 | BAX–E2482–00 | PIPE 2 | 1 | | | | | |
| 22 | 90467–19803 | CLIP | 4 | | | | | |

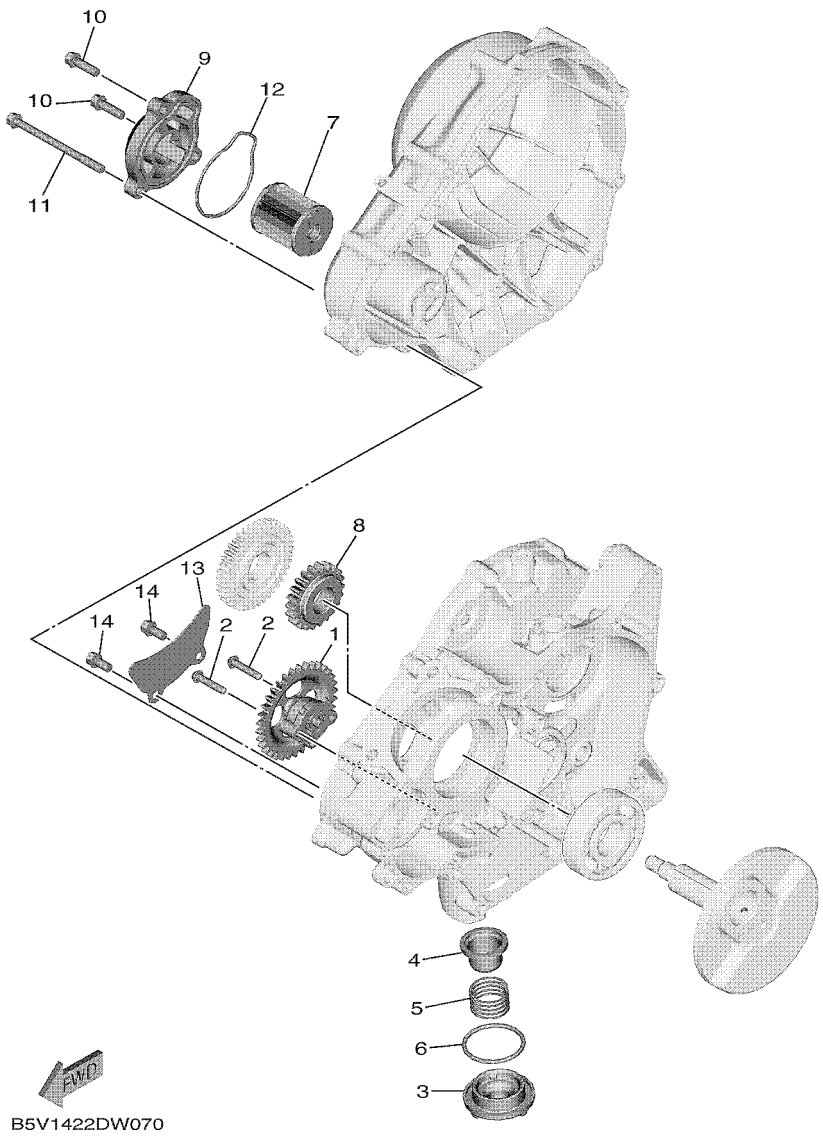


## FIG. 7 OIL PUMP

| REF. NO. | PART NO. | DESCRIPTION | BAX2 | | | | | REMARKS |
|---|---|---|---|---|---|---|---|---|
| 1 | 2ND–E3300–01 | OIL PUMP ASSY | 1 | | | | | |
| 2 | 90111–05808 | BOLT,HEX. SOCKET BUTTON | 2 | | | | | |
| 3 | 1S8–E5351–00 | PLUG, DRAIN | 1 | | | | | |
| 4 | 38B–E3411–00 | STRAINER, OIL | 1 | | | | | |
| 5 | 90501–18576 | SPRING, COMPRESSION | 1 | | | | | |
| 6 | 93210–34804 | O-RING | 1 | | | | | |
| 7 | 38B–E3440–01 | ELEMENT ASSY, OIL CLEANER | 1 | | | | | |
| 8 | 2ND–E3324–10 | GEAR, PUMP DRIVE | 1 | | | | | |
| 9 | 55C–E3447–00 | COVER, OIL ELEMENT | 1 | | | | | |
| 10 | 95E32–06020 | BOLT, FLANGE DEEP RECESS | 2 | | | | | |
| 11 | 95E32–06080 | BOLT, FLANGE DEEP RECESS | 1 | | | | | |
| 12 | 93210–54808 | O-RING | 1 | | | | | |
| 13 | 3C1–E3327–00 | COVER, PUMP GEAR | 1 | | | | | |
| 14 | 95E32–06012 | BOLT, FLANGE DEEP RECESS | 2 | | | | | |

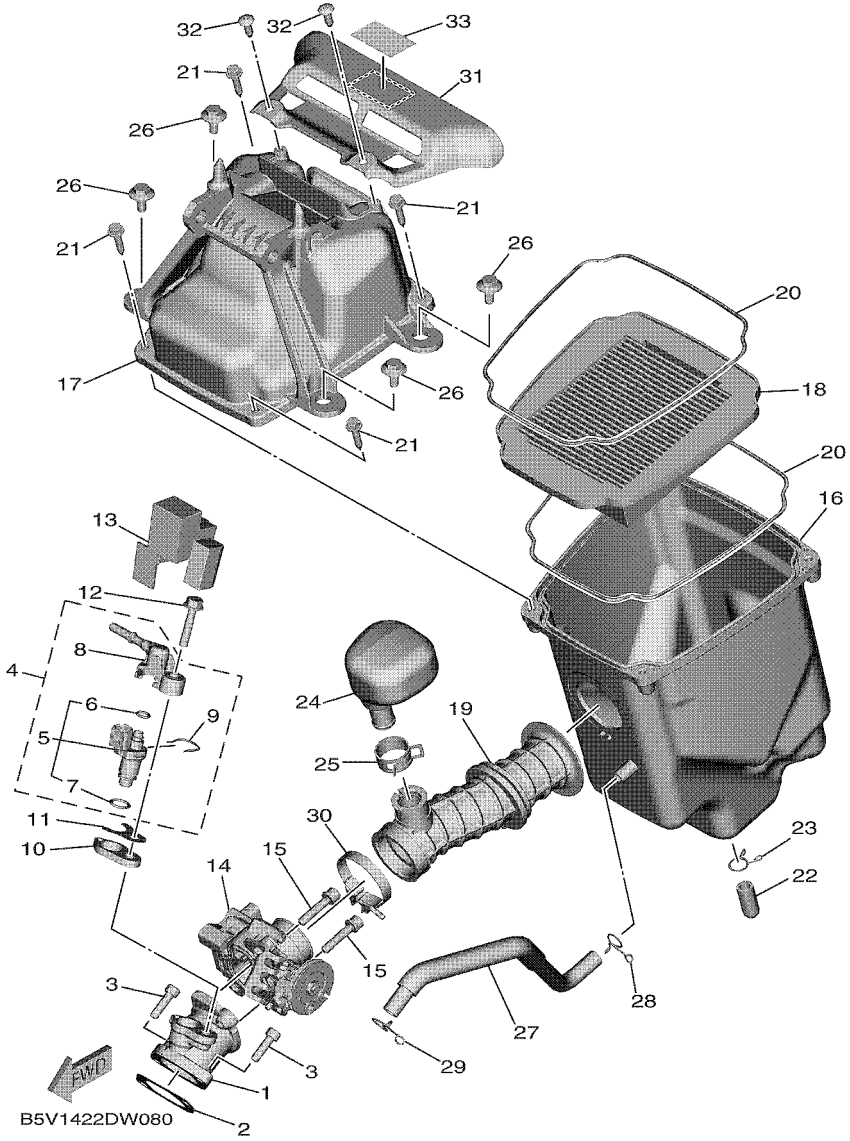


## FIG. 8 INTAKE

| REF. NO. | PART NO. | DESCRIPTION | BAX2 | | | | | REMARKS |
|---|---|---|---|---|---|---|---|---|
| 1 | BK6–E3585–00 | MANIFOLD | 1 | | | | | |
| 2 | BAX–E4199–00 | GASKET | 1 | | | | | |
| 3 | 91312–06020 | BOLT, HEXAGON SOCKET HEAD | 2 | | | | | |
| 4 | BK6–E3770–00 | INJECTOR ASSY | 1 | | | | | |
| 5 | BK6–E3761–00 | .INJECTOR | 1 | | | | | |
| 6 | 54P–E4147–00 | ..O-RING | 1 | | | | | |
| 7 | 5CA–E4147–00 | ..O-RING | 1 | | | | | |
| 8 | 54P–E3938–00 | .PIPE | 1 | | | | | |
| 9 | 54P–E4137–00 | .CLIP | 1 | | | | | |
| 10 | 2FB–E3556–00 | GASKET, MANIFOLD | 1 | | | | | |
| 11 | BAX–E3557–00 | GASKET | 1 | | | | | |
| 12 | 95812–06030 | BOLT, FLANGE | 1 | | | | | |
| 13 | 2ND–E3767–10 | CAP, INJECTOR | 1 | | | | | |
| 14 | B5V–E3750–00 | THROTTLE BODY ASSY | 1 | | | | | |
| 15 | 90110–06846 | BOLT, HEXAGON SOCKET HEAD | 2 | | | | | |
| 16 | B5V–E4411–00 | CASE, AIR CLEANER 1 | 1 | | | | | |
| 17 | B5V–E4412–00 | CAP, CLEANER CASE 1 | 1 | | | | | |
| 18 | B5V–E4450–00 | ELEMENT ASSY, AIR CLEANER | 1 | | | | | |
| 19 | B5V–E4453–00 | JOINT, AIR CLEANER 1 | 1 | | | | | |
| 20 | 2ND–E4452–00 | SEAL | 2 | | | | | |
| 21 | 90163–05803 | SCREW, TAPPING | 4 | | | | | |
| 22 | 5WP–E443E–00 | PIPE, DRAIN | 1 | | | | | |
| 23 | 90467–11019 | CLIP | 1 | | | | | |
| 24 | B5V–E4877–00 | RESONATOR | 1 | | | | | |
| 25 | 90467–22802 | CLIP | 1 | | | | | |
| 26 | 90109–06202 | BOLT | 4 | | | | | |
| 27 | B5V–E1166–00 | PIPE, BREATHER 1 | 1 | | | | | |

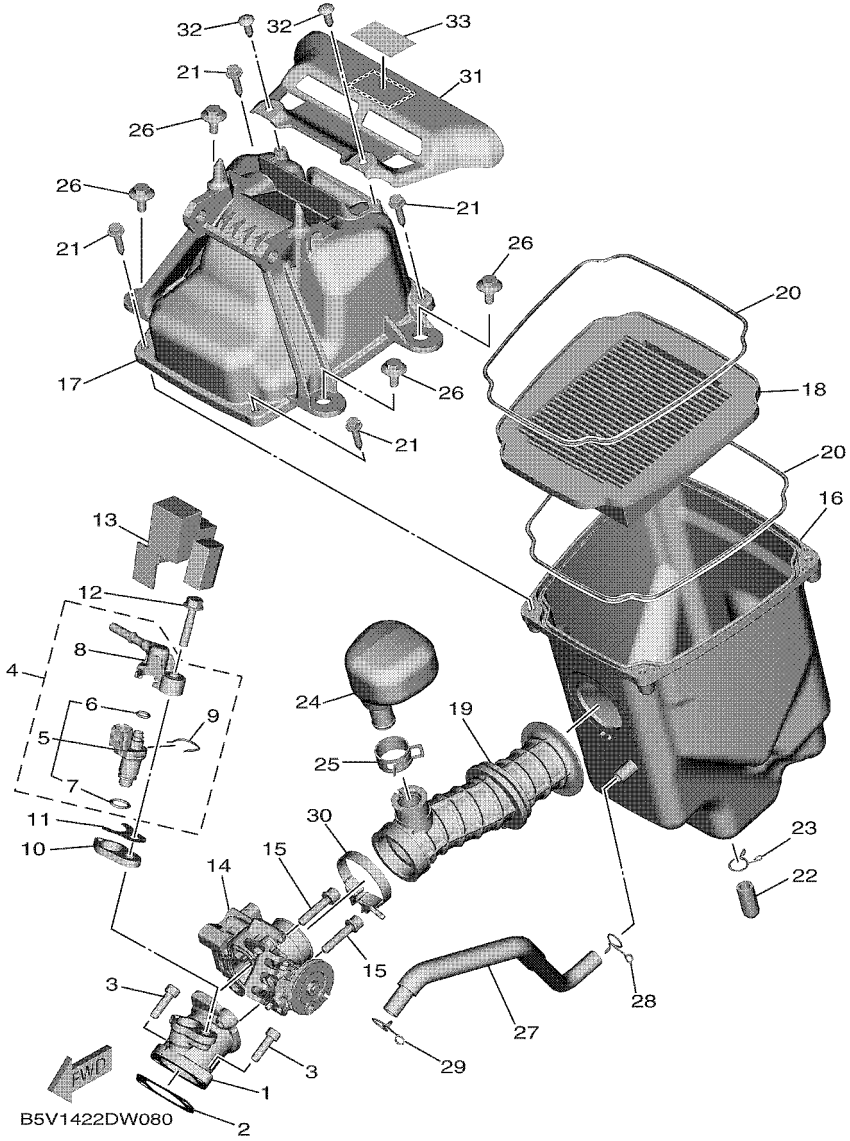


## FIG. 8 INTAKE

| REF. NO. | PART NO. | DESCRIPTION | BAX2 | | | | | REMARKS |
|---|---|---|---|---|---|---|---|---|
| 28 | 90467–11825 | CLIP | 1 | | | | | |
| 29 | 90467–12052 | CLIP | 1 | | | | | |
| 30 | 90450–43805 | HOSE CLAMP ASSY | 1 | | | | | |
| 31 | B5V–E4417–00 | COVER 1 | 1 | | | | | |
| 32 | 90160–05012 | SCREW, ROUND TAPPING | 2 | | | | | |
| 33 | 55C–F815P–00 | LABEL, NOTICE 1 | 1 | | | | | |

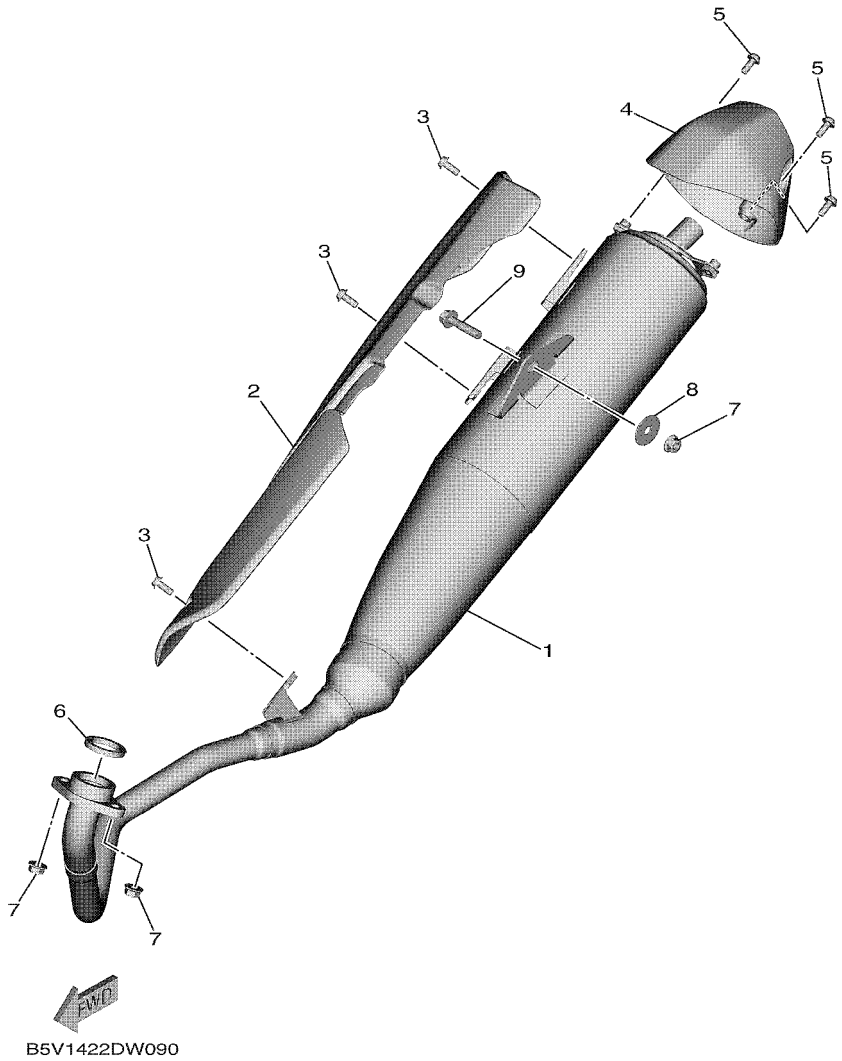


## FIG. 9 EXHAUST

| REF. NO. | PART NO. | DESCRIPTION | BAX2 | | | | | REMARKS |
|---|---|---|---|---|---|---|---|---|
| 1 | BAX–E4703–00 | MUFFLER COMP. 1 | 1 | | | | | |
| 2 | BAX–E4718–00 | PROTECTOR, MUFFLER 1 | 1 | | | | | |
| 3 | 90111–06807 | BOLT,HEX. SOCKET BUTTON | 3 | | | | | |
| 4 | BAX–E4799–10 | CAP | 1 | | | | | |
| 5 | 90111–06807 | BOLT,HEX. SOCKET BUTTON | 3 | | | | | |
| 6 | BK7–E4613–00 | GASKET, EXHAUST PIPE | 1 | | | | | |
| 7 | 95702–08500 | NUT, FLANGE | 3 | | | | | |
| 8 | 90201–08612 | WASHER, PLATE | 1 | | | | | |
| 9 | 95D32–08035 | BOLT, FLANGE DEEP RECESS | 1 | | | | | |

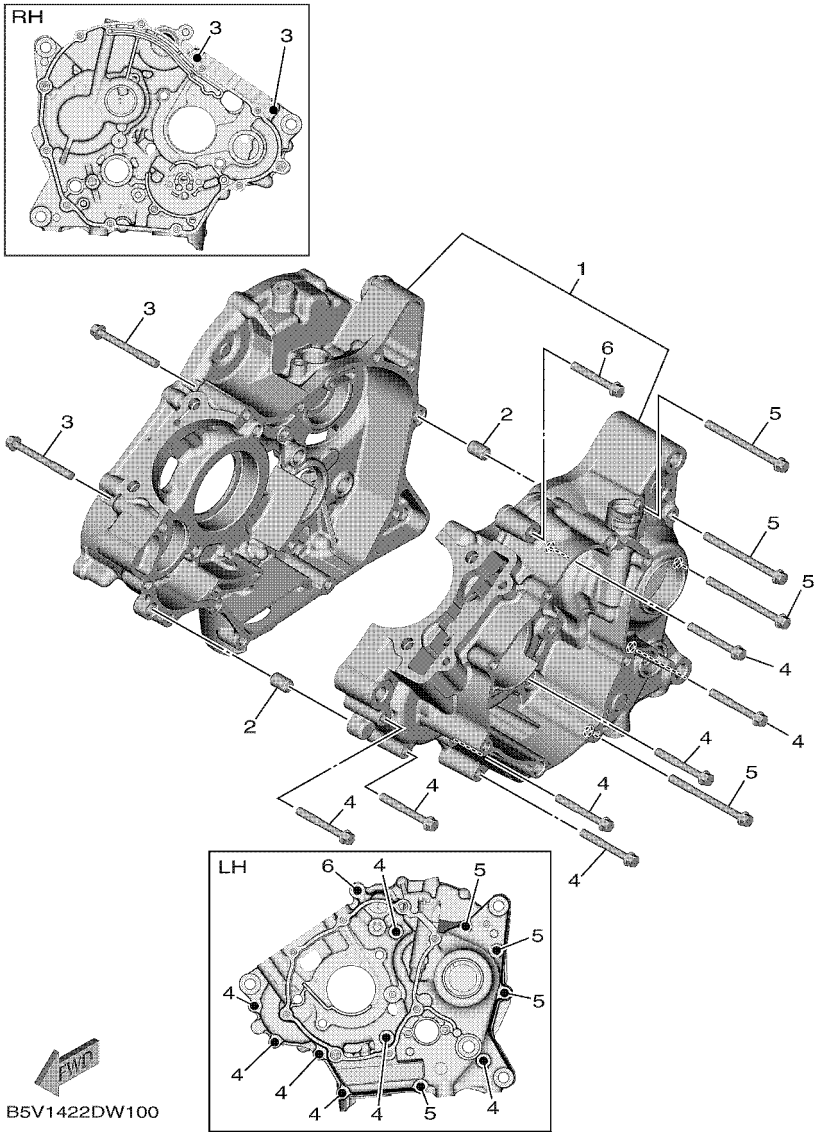


## FIG. 10 CRANKCASE

| REF. NO. | PART NO. | DESCRIPTION | BAX2 | | | | | REMARKS |
|---|---|---|---|---|---|---|---|---|
| 1 | BAX–E5150–00 | CRANKCASE ASSY | 1 | | | | | |
| 2 | 91810–14808 | PIN, DOWEL | 2 | | | | | |
| 3 | 95E32–06055 | BOLT, FLANGE DEEP RECESS | 2 | | | | | |
| 4 | 95E32–06045 | BOLT, FLANGE DEEP RECESS | 7 | | | | | |
| 5 | 95E32–06070 | BOLT, FLANGE DEEP RECESS | 4 | | | | | |
| 6 | 95E32–06040 | BOLT, FLANGE DEEP RECESS | 1 | | | | | |

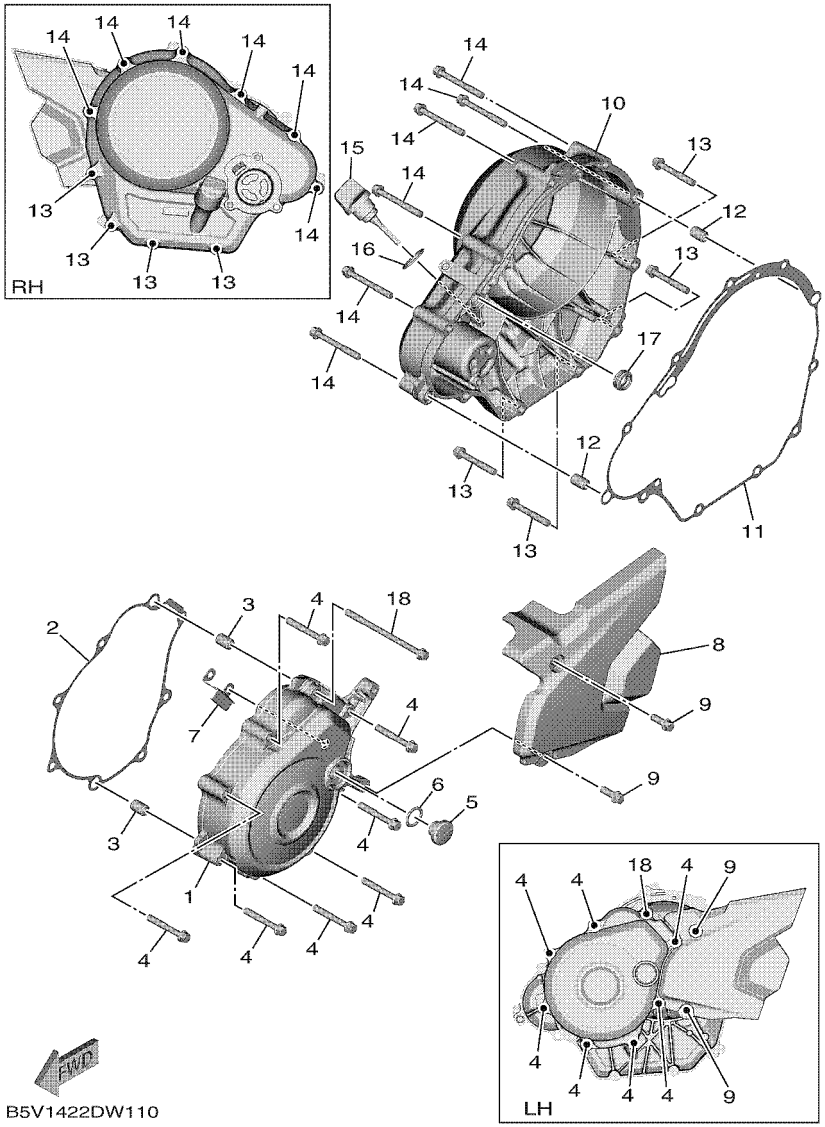


## FIG. 11 CRANKCASE COVER 1

| REF. NO. | PART NO. | DESCRIPTION | BAX2 | | | | | REMARKS |
|---|---|---|---|---|---|---|---|---|
| 1 | BAX–E5411–00 | COVER, CRANKCASE 1 | 1 | | | | | |
| 2 | BAX–E5451–00 | GASKET, CRANKCASE COVER 1 | 1 | | | | | |
| 3 | 91810–14808 | PIN, DOWEL | 2 | | | | | |
| 4 | 95E32–06040 | BOLT, FLANGE DEEP RECESS | 7 | | | | | |
| 5 | 90340–14824 | PLUG, STRAIGHT SCREW | 1 | | | | | |
| 6 | 93210–14899 | O-RING | 1 | | | | | |
| 7 | 2ND–E5113–00 | PLATE | 1 | | | | | |
| 8 | BAX–E5418–10 | COVER, CHAIN CASE | 1 | | | | | |
| 9 | 95E32–06016 | BOLT, FLANGE DEEP RECESS | 2 | | | | | |
| 10 | BAX–E5421–00 | COVER, CRANKCASE 2 | 1 | | | | | |
| 11 | BAX–E5461–00 | GASKET, CRANKCASE COVER 2 | 1 | | | | | |
| 12 | 91810–14808 | PIN, DOWEL | 2 | | | | | |
| 13 | 95E32–06040 | BOLT, FLANGE DEEP RECESS | 4 | | | | | |
| 14 | 95E32–06050 | BOLT, FLANGE DEEP RECESS | 6 | | | | | |
| 15 | BAX–E5362–00 | PLUG, OIL LEVEL | 1 | | | | | |
| 16 | 93210–19809 | O-RING | 1 | | | | | |
| 17 | 93101–10843 | OIL SEAL | 1 | | | | | |
| 18 | 95E32–06090 | BOLT, FLANGE DEEP RECESS | 1 | | | | | |

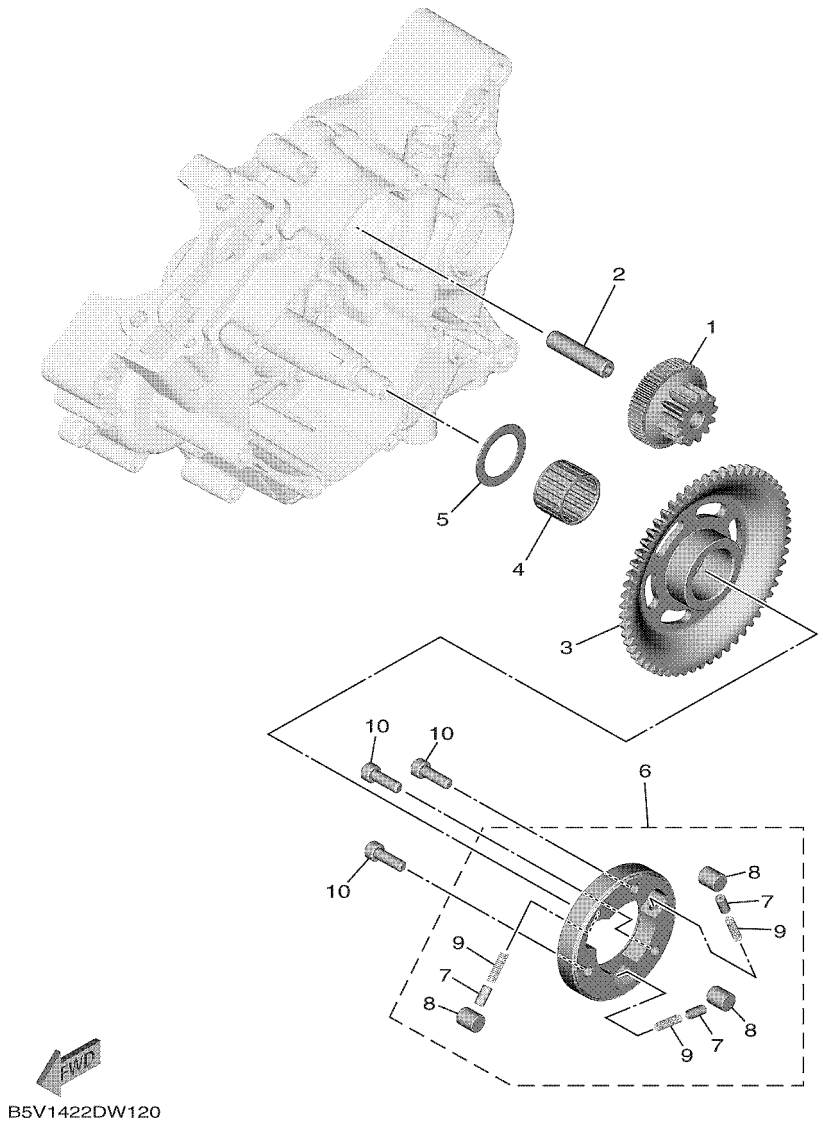


## FIG. 12 STARTER CLUTCH

| REF. NO. | PART NO. | DESCRIPTION | BAX2 | | | | | REMARKS |
|---|---|---|---|---|---|---|---|---|
| 1 | B17–E5514–00 | GEAR 2 | 1 | | | | | |
| 2 | 1S8–E5521–00 | SHAFT 1 | 1 | | | | | |
| 3 | 2ND–E5524–01 | WHEEL, STARTER | 1 | | | | | |
| 4 | 93310–325YC | BEARING | 1 | | | | | |
| 5 | 90201–25290 | WASHER, PLATE | 1 | | | | | |
| 6 | 2PV–E5580–00 | STARTER CLUTCH OUTER ASSY | 1 | | | | | |
| 7 | 2PH–E5583–10 | .CAP, STARTER CLUTCH SPRING | 3 | | | | | |
| 8 | 1ST–E5614–00 | .PIN, DOWEL | 3 | | | | | |
| 9 | 2PV–E5572–00 | .SPRING, RETURN | 3 | | | | | |
| 10 | 90110–06873 | BOLT, HEXAGON SOCKET HEAD | 3 | | | | | |

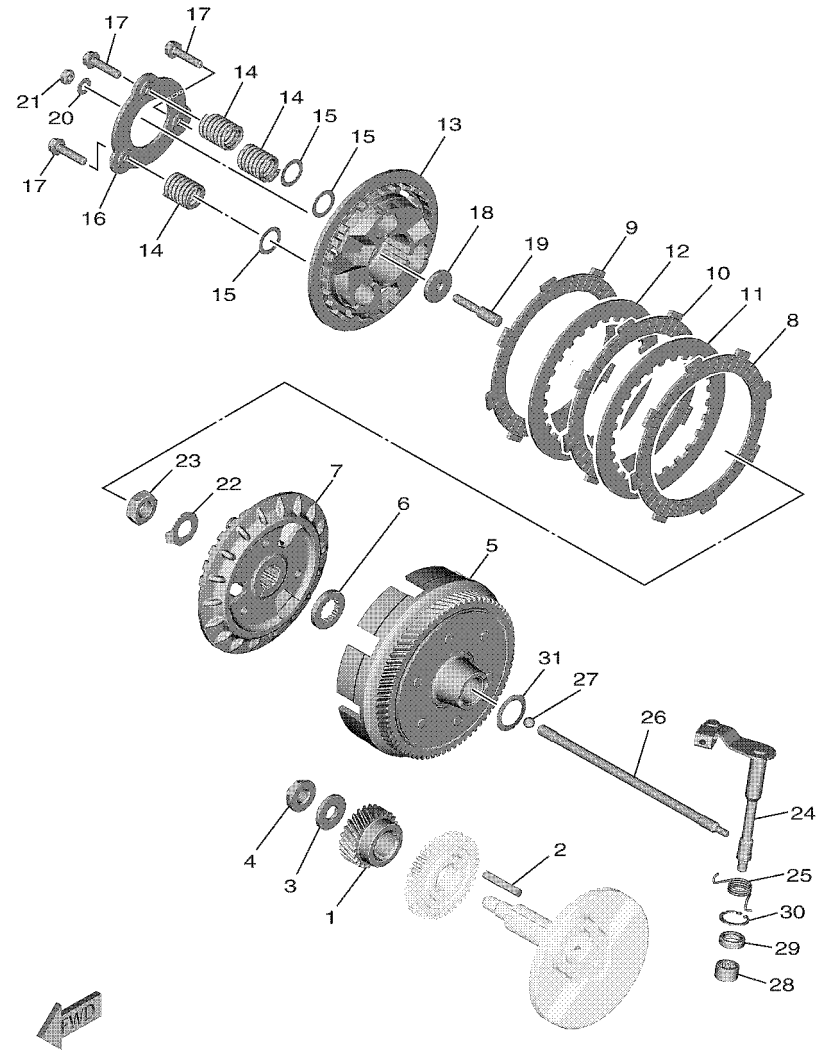


B5V1422DW130

## FIG. 13 CLUTCH

| REF. NO. | PART NO. | DESCRIPTION | BAX2 | | | | | REMARKS |
|---|---|---|---|---|---|---|---|---|
| 1 | 2ND–E6111–00 | GEAR, PRIMARY DRIVE | 1 | | | | | UR |
| | 2ND–E6111–10 | GEAR, PRIMARY DRIVE | 1 | | | | | UR |
| 2 | 55P–E6193–00 | KEY, FEATHER | 1 | | | | | |
| 3 | 90201–12019 | WASHER, PLATE | 1 | | | | | |
| 4 | B5V–E6647–00 | NUT | 1 | | | | | |
| 5 | B5V–E6150–00 | PRIMARY DRIVEN GEAR COMP. | 1 | | | | | |
| 6 | 2ND–E6154–00 | PLATE, THRUST 1 | 1 | | | | | |
| 7 | B5V–E6371–00 | BOSS, CLUTCH | 1 | | | | | |
| 8 | 2ND–E6321–00 | PLATE, FRICTION | 1 | | | | | |
| 9 | B5V–E6331–00 | PLATE, FRICTION 2 | 1 | | | | | |
| 10 | B5V–E6321–00 | PLATE, FRICTION | 1 | | | | | |
| 11 | B5V–E6325–00 | PLATE, CLUTCH 2 | 1 | | | | | |
| 12 | B5V–E6324–00 | PLATE, CLUTCH 1 | 1 | | | | | |
| 13 | B5V–E6351–00 | PLATE, PRESSURE 1 | 1 | | | | | |
| 14 | BK6–E6333–00 | SPRING, CLUTCH 1 | 3 | | | | | |
| 15 | BK6–E6774–00 | WASHER | 3 | | | | | |
| 16 | B5V–E6352–00 | PLATE, PRESSURE 2 | 1 | | | | | |
| 17 | B5V–E6337–00 | SCREW, SPRING | 3 | | | | | |
| 18 | B5V–E6358–00 | PLATE, PUSH | 1 | | | | | |
| 19 | B5V–E6356–00 | ROD, PUSH 1 | 1 | | | | | |
| 20 | 2ND–E6144–00 | WASHER | 1 | | | | | |
| 21 | 2ND–E6344–00 | NUT, ADJUSTING | 1 | | | | | |
| 22 | 90215–14802 | WASHER, LOCK | 1 | | | | | |
| 23 | 90170–14801 | NUT | 1 | | | | | |
| 24 | B5V–E6380–00 | PUSH LEVER ASSY | 1 | | | | | |
| 25 | B5V–E6345–00 | SPRING, RETURN | 1 | | | | | |
| 26 | 2ND–E6357–00 | ROD, PUSH 2 | 1 | | | | | |

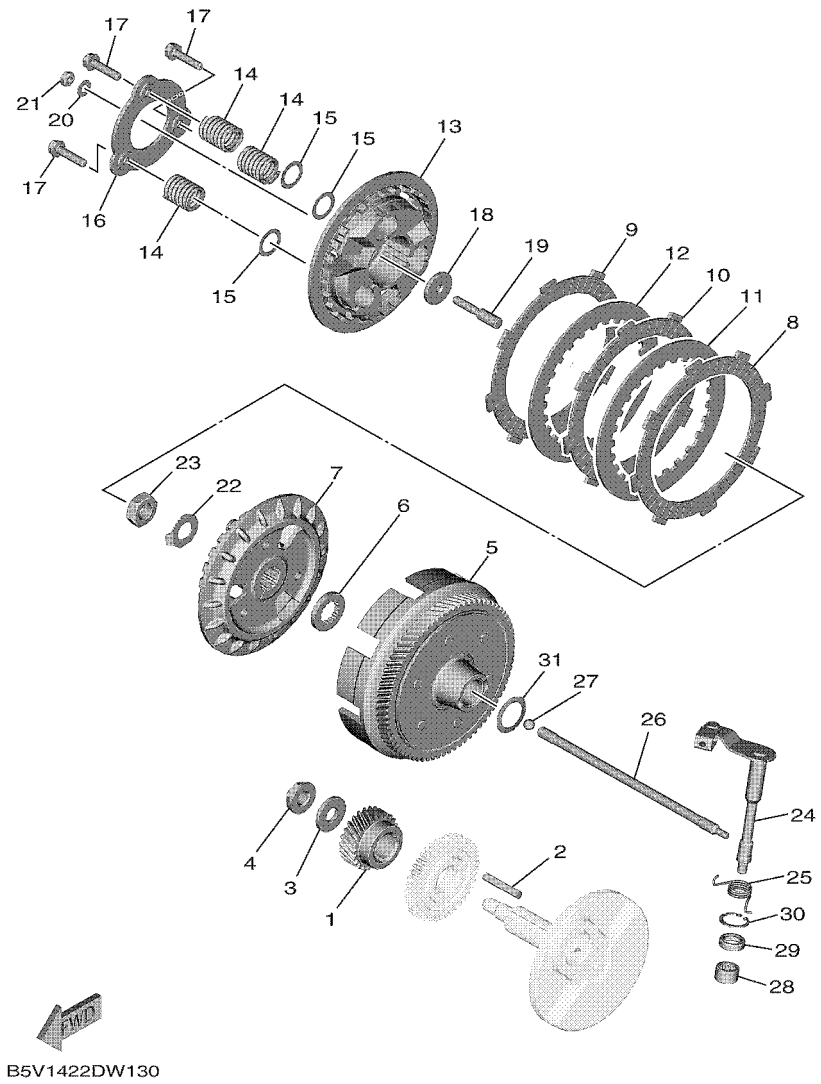


## FIG. 13 CLUTCH

| REF. NO. | PART NO. | DESCRIPTION | BAX2 | | | | | REMARKS |
|---|---|---|---|---|---|---|---|---|
| 27 | 93505–16844 | BALL | 1 | | | | | |
| 28 | 93315–112Y9 | BEARING | 1 | | | | | |
| 29 | 93102–12810 | OIL SEAL | 1 | | | | | |
| 30 | 99009–20500 | CIRCLIP | 1 | | | | | |
| 31 | 90208–20003 | WASHER, CONICAL SPRING | 1 | | | | | |

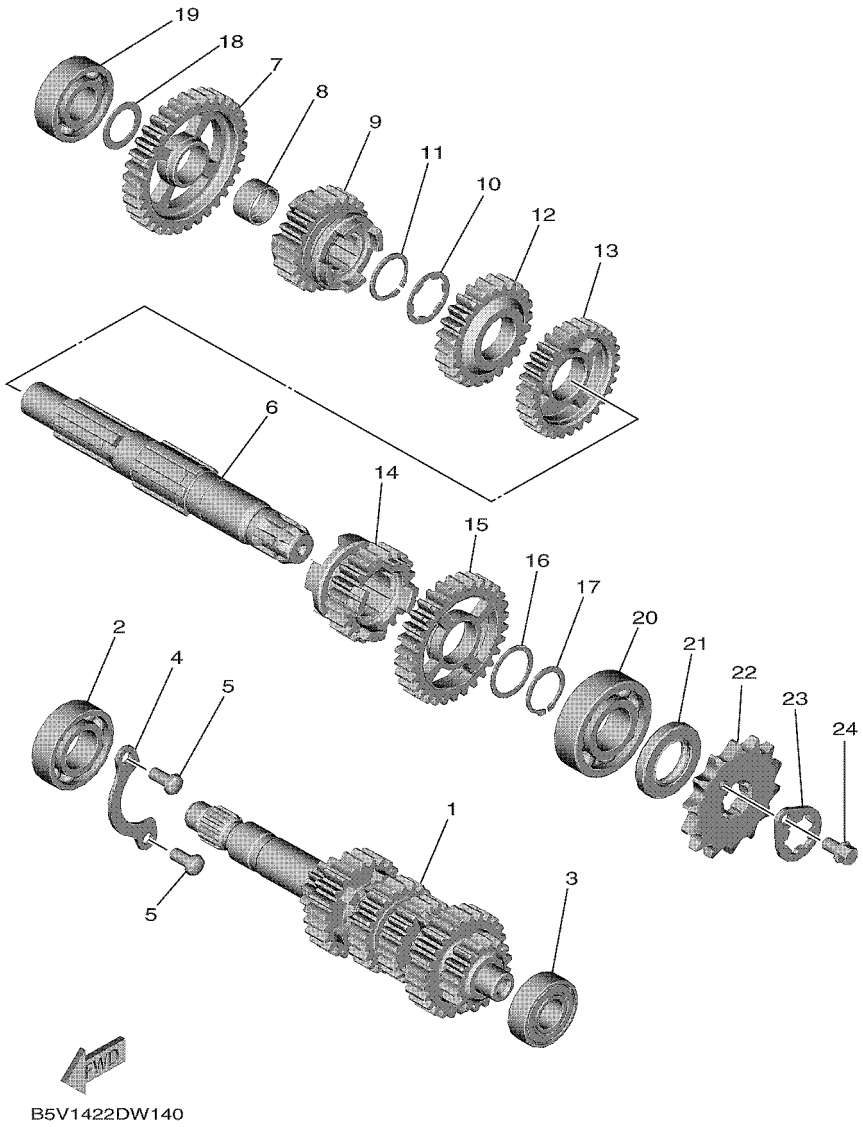


## FIG. 14 TRANSMISSION

| REF. NO. | PART NO. | DESCRIPTION | BAX2 | | | | | REMARKS |
|---|---|---|---|---|---|---|---|---|
| 1 | B5V–E7410–00 | MAIN AXLE COMP. | 1 | | | | | |
| 2 | 93306–054XF | BEARING | 1 | | | | | |
| 3 | 933A6–202X0 | BEARING | 1 | | | | | |
| 4 | 16S–E7471–00 | PLATE, COVER | 1 | | | | | |
| 5 | 98512–06012 | SCREW, PAN HEAD | 2 | | | | | |
| 6 | B5V–E7421–00 | AXLE, DRIVE | 1 | | | | | |
| 7 | 55P–E7211–00 | GEAR, 1ST WHEEL (34T) | 1 | | | | | |
| 8 | 90387–17804 | COLLAR | 1 | | | | | |
| 9 | B5V–E7251–00 | GEAR, 5TH WHEEL (22T) | 1 | | | | | |
| 10 | 90209–18208 | WASHER | 1 | | | | | |
| 11 | 93410–22039 | CIRCLIP | 1 | | | | | |
| 12 | B5V–E7241–00 | GEAR, 4TH WHEEL (24T) | 1 | | | | | |
| 13 | B5V–E7231–00 | GEAR, 3RD WHEEL (30T) | 1 | | | | | |
| 14 | B5V–E7261–00 | GEAR, 6TH WHEEL (21T) | 1 | | | | | |
| 15 | B5V–E7221–00 | GEAR, 2ND WHEEL (30T) | 1 | | | | | |
| 16 | 90201–22793 | WASHER, PLATE | 1 | | | | | |
| 17 | 93410–22039 | CIRCLIP | 1 | | | | | |
| 18 | 90201–173F4 | WASHER, PLATE | 1 | | | | | |
| 19 | 93306–203XR | BEARING | 1 | | | | | |
| 20 | 93306–272YC | BEARING | 1 | | | | | |
| 21 | 93102–22827 | OIL SEAL | 1 | | | | | |
| 22 | 93822–14800 | SPROCKET, DRIVE (14T) | 1 | | | | | |
| 23 | 1S8–E7456–00 | HOLDER, SPROCKET | 1 | | | | | |
| 24 | 95E32–06010 | BOLT, FLANGE DEEP RECESS | 1 | | | | | |

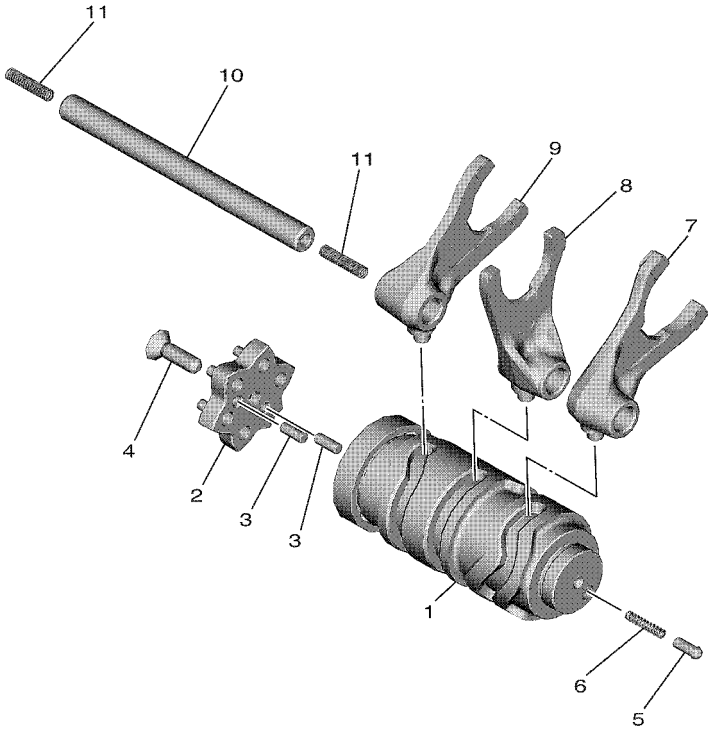

B5V1422DW150

## FIG. 15 SHIFT CAM & FORK

| REF. NO. | PART NO. | DESCRIPTION | BAX2 | | | | | REMARKS |
|---|---|---|---|---|---|---|---|---|
| 1 | B5V–E8540–00 | SHIFT CAM ASSY | 1 | | | | | |
| 2 | BK7–E8185–00 | SEGMENT | 1 | | | | | |
| 3 | 93604–10011 | PIN, DOWEL | 2 | | | | | |
| 4 | 90151–06818 | SCREW, COUNTERSUNK | 1 | | | | | |
| 5 | 3S4–E8542–00 | POINT, NEUTRAL | 1 | | | | | |
| 6 | 90501–06022 | SPRING, COMPRESSION | 1 | | | | | |
| 7 | 2ND–E8511–00 | FORK, SHIFT 1 | 1 | | | | | |
| 8 | 2ND–E8512–00 | FORK, SHIFT 2 | 1 | | | | | |
| 9 | 2ND–E8513–00 | FORK, SHIFT 3 | 1 | | | | | |
| 10 | 2ND–E8531–00 | BAR, SHIFT FORK GUIDE 1 | 1 | | | | | |
| 11 | 90501–06800 | SPRING, COMPRESSION | 2 | | | | | |

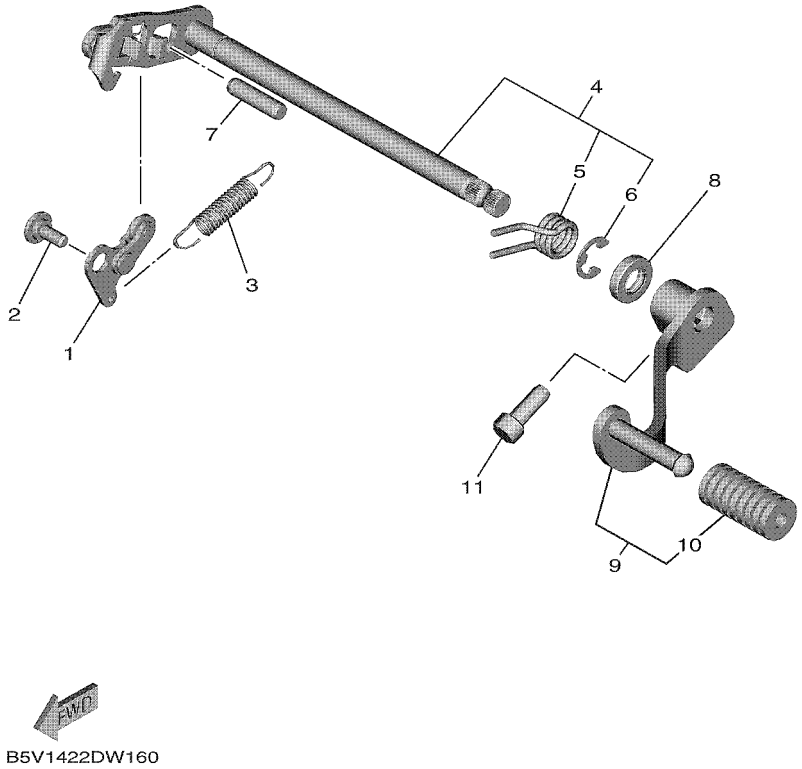


## FIG. 16 SHIFT SHAFT

| REF. NO. | PART NO. | DESCRIPTION | BAX2 | | | | | REMARKS |
|---|---|---|---|---|---|---|---|---|
| 1 | B5V–E8140–00 | STOPPER LEVER ASSY | 1 | | | | | |
| 2 | 90109–06279 | BOLT | 1 | | | | | |
| 3 | B5V–E8337–00 | SPRING | 1 | | | | | |
| 4 | B5V–E8101–00 | SHIFT SHAFT ASSY | 1 | | | | | |
| 5 | 90508–32837 | .SPRING, TORSION | 1 | | | | | |
| 6 | 99002–10600 | .CIRCLIP | 1 | | | | | |
| 7 | 93608–30839 | PIN, DOWEL | 1 | | | | | |
| 8 | 93102–12808 | OIL SEAL | 1 | | | | | |
| 9 | BAX–E8110–00 | SHIFT PEDAL ASSY | 1 | | | | | |
| 10 | 5HU–E8113–00 | .COVER, SHIFT PEDAL | 1 | | | | | |
| 11 | 91312–08020 | BOLT, HEXAGON SOCKET HEAD | 1 | | | | | |

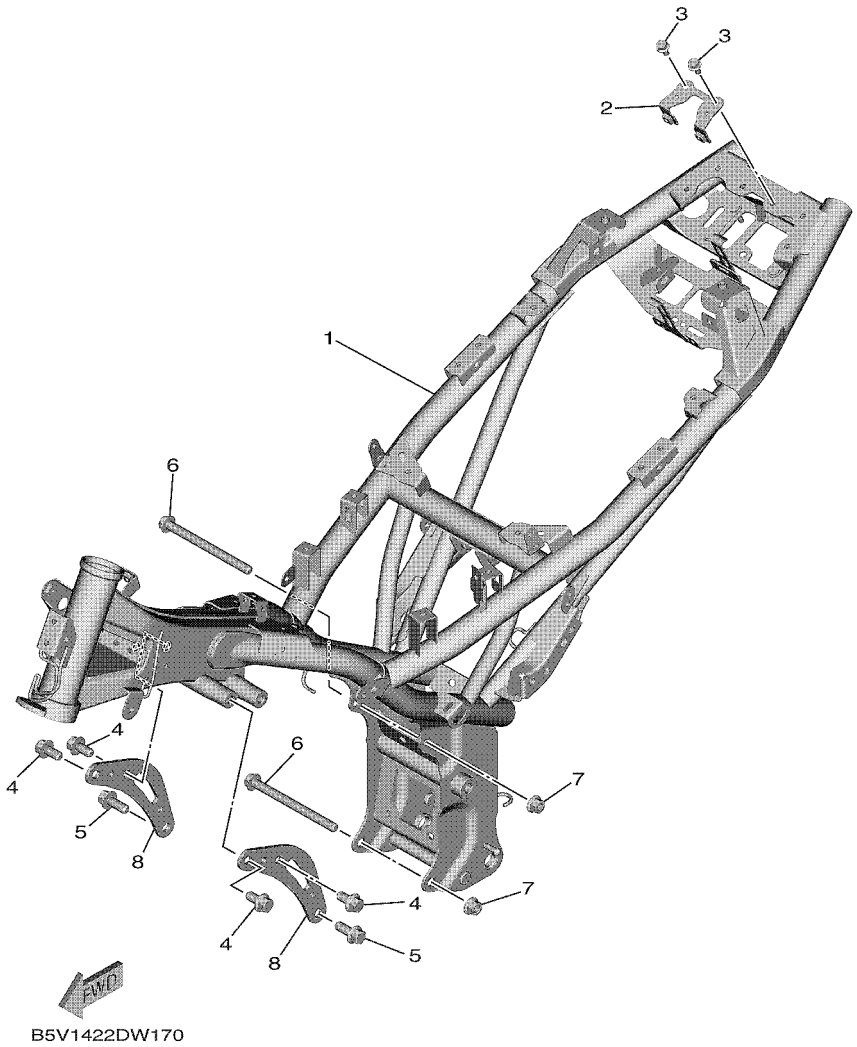


## FIG. 17 FRAME

| REF. NO. | PART NO. | DESCRIPTION | BAX2 | | | | | REMARKS |
|---|---|---|---|---|---|---|---|---|
| 1 | BAX–F1110–00 | FRAME COMP. | 1 | | | | | |
| 2 | BAX–F478X–00 | BRACKET, SEAT LOCK | 1 | | | | | |
| 3 | 95D02–06012 | BOLT, FLANGE DEEP RECESS | 2 | | | | | |
| 4 | 95812–10020 | BOLT, FLANGE | 4 | | | | | |
| 5 | 95817–10025 | BOLT, FLANGE | 2 | | | | | |
| 6 | 90105–108B4 | BOLT, FLANGE | 2 | | | | | |
| 7 | 90179–10805 | NUT | 2 | | | | | |
| 8 | B5V–F1315–00 | STAY, ENGINE 1 | 2 | | | | | |

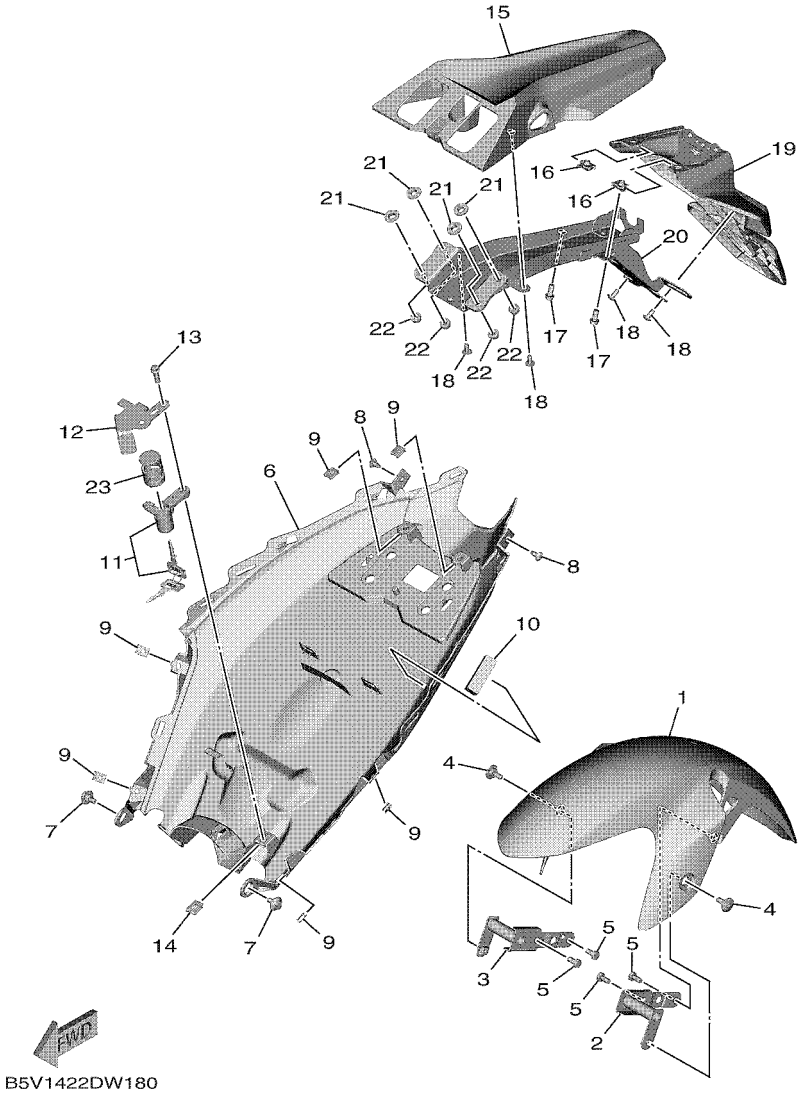


## FIG. 18 FENDER

| REF. NO. | PART NO. | DESCRIPTION | BAX2 | | | | | REMARKS |
|---|---|---|---|---|---|---|---|---|
| 1 | B17–F1511–10–P9 | FENDER, FRONT | 1 | | | | | MBM3 |
| 2 | B17–F1513–00 | STAY, FENDER 1 | 1 | | | | | |
| 3 | B17–F1514–00 | STAY, FENDER 2 | 1 | | | | | |
| 4 | 90109–068A4 | BOLT | 2 | | | | | |
| 5 | 97022–06012 | BOLT, HEXAGON | 4 | | | | | |
| 6 | BAX–F1611–00 | FENDER, REAR | 1 | | | | | |
| 7 | 90109–06202 | BOLT | 2 | | | | | |
| 8 | 97707–50012 | SCREW, TRUSS HEAD TAPPING | 2 | | | | | |
| 9 | 90183–05807 | NUT, SPRING | 6 | | | | | |
| 10 | 90520–15013 | DAMPER, PLATE | 1 | | | | | |
| 11 | B5V–F465E–00 | ROTOR COMP. | 1 | | | | | |
| 12 | BAX–F117K–00 | STAY, LOCK | 1 | | | | | |
| 13 | 95022–06020 | BOLT, FLANGE | 1 | | | | | |
| 14 | 90183–06800 | NUT, SPRING | 1 | | | | | |
| 15 | BAX–F1629–00 | GUARD, MUD | 1 | | | | | |
| 16 | 90183–06800 | NUT, SPRING | 2 | | | | | |
| 17 | 95022–06014 | BOLT, FLANGE | 2 | | | | | |
| 18 | 90160–05018 | SCREW, ROUND TAPPING | 4 | | | | | |
| 19 | BAX–F2328–00 | MUD GUARD 2 | 1 | | | | | |
| 20 | BAX–F164F–00 | STAY 1 | 1 | | | | | |
| 21 | 90387–08850 | COLLAR | 4 | | | | | |
| 22 | 95602–06200 | NUT, SELF-LOCKING | 4 | | | | | |
| 23 | BAX–F482H–00 | CAP | 1 | | | | | |

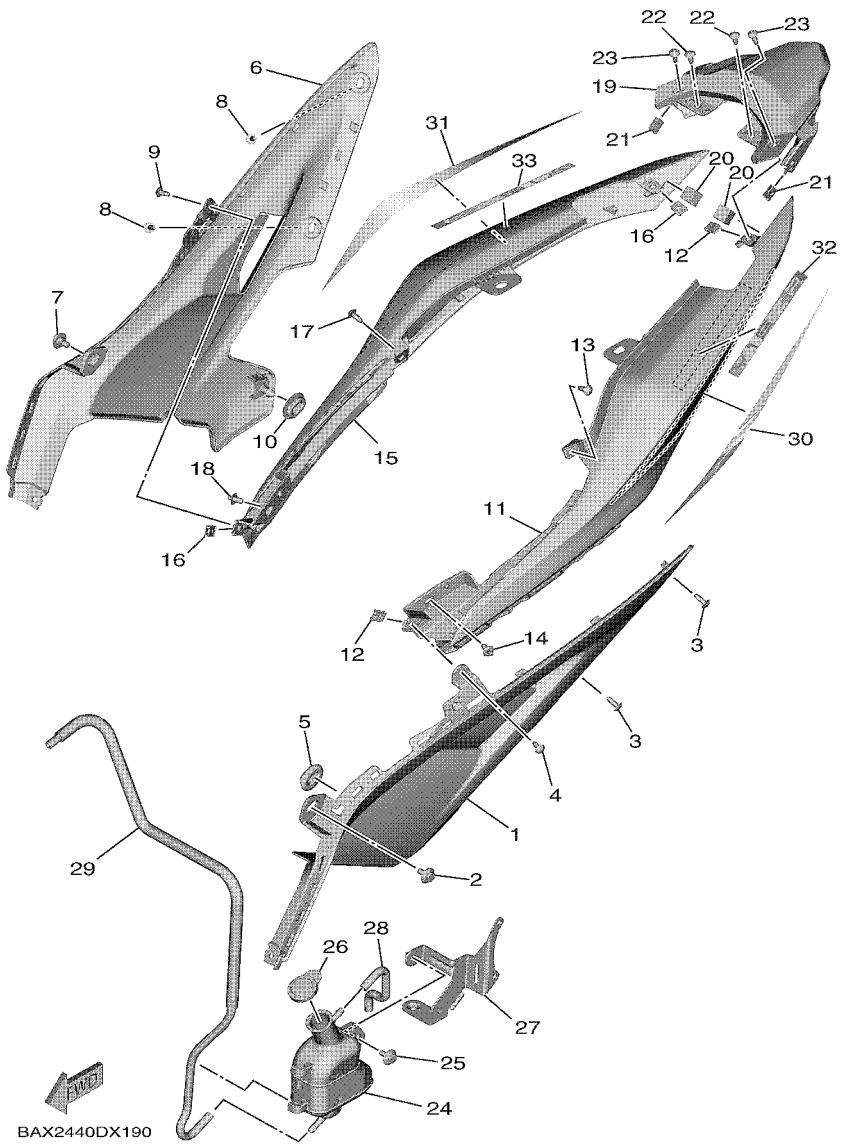


## FIG. 19 SIDE COVER

| REF. NO. | PART NO. | DESCRIPTION | BAX2 | | | | | REMARKS |
|---|---|---|---|---|---|---|---|---|
| 1 | BAX–F1711–00 | COVER, SIDE 1 | 1 | | | | | |
| 2 | 90109–06202 | BOLT | 1 | | | | | |
| 3 | 90160–05009 | SCREW, ROUND TAPPING | 2 | | | | | |
| 4 | 97707–50012 | SCREW, TRUSS HEAD TAPPING | 1 | | | | | |
| 5 | 90480–01821 | GROMMET | 1 | | | | | |
| 6 | BAX–F1721–00 | COVER, SIDE 2 | 1 | | | | | |
| 7 | 90109–06202 | BOLT | 1 | | | | | |
| 8 | 90160–05009 | SCREW, ROUND TAPPING | 2 | | | | | |
| 9 | 97707–50012 | SCREW, TRUSS HEAD TAPPING | 1 | | | | | |
| 10 | 90480–01821 | GROMMET | 1 | | | | | |
| 11 | BAX–F1731–00–P3 | COVER, SIDE 3 | 1 | | | | | MBM3 |
| 12 | 90183–05807 | NUT, SPRING | 2 | | | | | |
| 13 | 90160–05009 | SCREW, ROUND TAPPING | 1 | | | | | |
| 14 | 90269–06816 | RIVET | 1 | | | | | |
| 15 | BAX–F1741–00–P3 | COVER, SIDE 4 | 1 | | | | | MBM3 |
| 16 | 90183–05807 | NUT, SPRING | 2 | | | | | |
| 17 | 90160–05009 | SCREW, ROUND TAPPING | 1 | | | | | |
| 18 | 90269–06816 | RIVET | 1 | | | | | |
| 19 | BAX–F171E–00 | COVER, SIDE 5 | 1 | | | | | |
| 20 | 90520–15012 | DAMPER, PLATE | 2 | | | | | |
| 21 | 90183–05807 | NUT, SPRING | 2 | | | | | |
| 22 | 97707–50012 | SCREW, TRUSS HEAD TAPPING | 2 | | | | | |
| 23 | 90160–05009 | SCREW, ROUND TAPPING | 2 | | | | | |
| 24 | B5V–F1871–00 | TANK, RECOVERY | 1 | | | | | |
| 25 | 90109–068B4 | BOLT | 1 | | | | | |
| 26 | 1S9–F1875–00 | CAP | 1 | | | | | |
| 27 | BAX–F172L–00 | BRACKET 2 | 1 | | | | | |

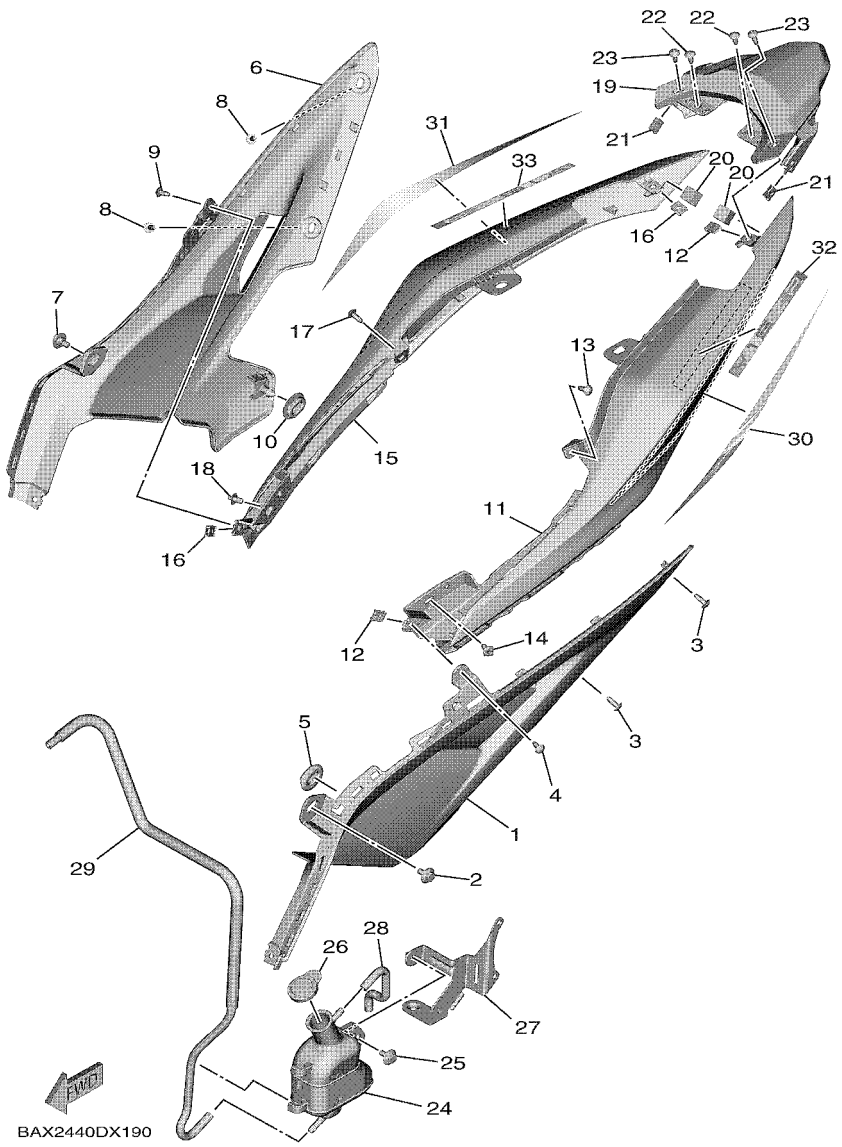


## FIG. 19 SIDE COVER

| REF. NO. | PART NO. | DESCRIPTION | BAX2 | | | | | REMARKS |
|---|---|---|---|---|---|---|---|---|
| 28 | BAX–F1816–00 | PIPE 1 | 1 | | | | | |
| 29 | BAX–F1817–00 | PIPE 2 | 1 | | | | | |
| 30 | BAX–F173E–30 | GRAPHIC 1 | 1 | | | | | |
| 31 | BAX–F173F–30 | GRAPHIC 2 | 1 | | | | | |
| 32 | BAX–F174G–30 | GRAPHIC 3 | 1 | | | | | |
| 33 | BAX–F174H–00 | GRAPHIC 4 | 1 | | | | | |

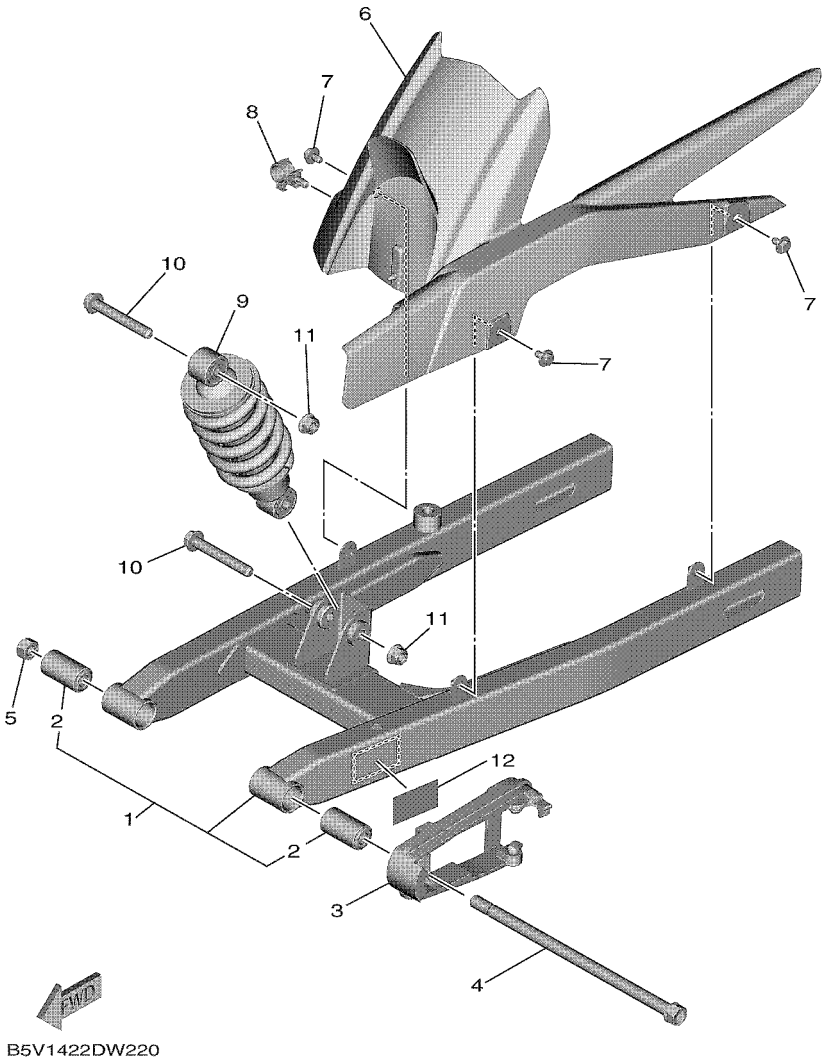


## FIG. 20 REAR ARM & SUSPENSION

| REF. NO. | PART NO. | DESCRIPTION | BAX2 | | | | | REMARKS |
|---|---|---|---|---|---|---|---|---|
| 1 | BAX–F2100–00 | REAR ARM ASSY | 1 | | | | | |
| 2 | 5B9–F2123–00 | .BUSH 1 | 2 | | | | | |
| 3 | B17–F2151–10 | SEAL, GUARD | 1 | | | | | |
| 4 | 4NP–F5381–00 | AXLE, WHEEL | 1 | | | | | |
| 5 | 95614–12100 | NUT, U | 1 | | | | | |
| 6 | B17–F1650–00 | REAR FENDER COMP. | 1 | | | | | |
| 7 | 90119–06155 | BOLT, WITH WASHER | 3 | | | | | |
| 8 | 90464–16012 | CLAMP | 1 | | | | | |
| 9 | B17–F2210–00 | SHOCK ABSORBER ASSY, REAR | 1 | | | | | |
| 10 | 90105–108B8 | BOLT, FLANGE | 2 | | | | | |
| 11 | 95602–10200 | NUT, S/L FLANGE | 2 | | | | | |
| 12 | B17–F1668–10 | LABEL, TIRE | 1 | | | | | |

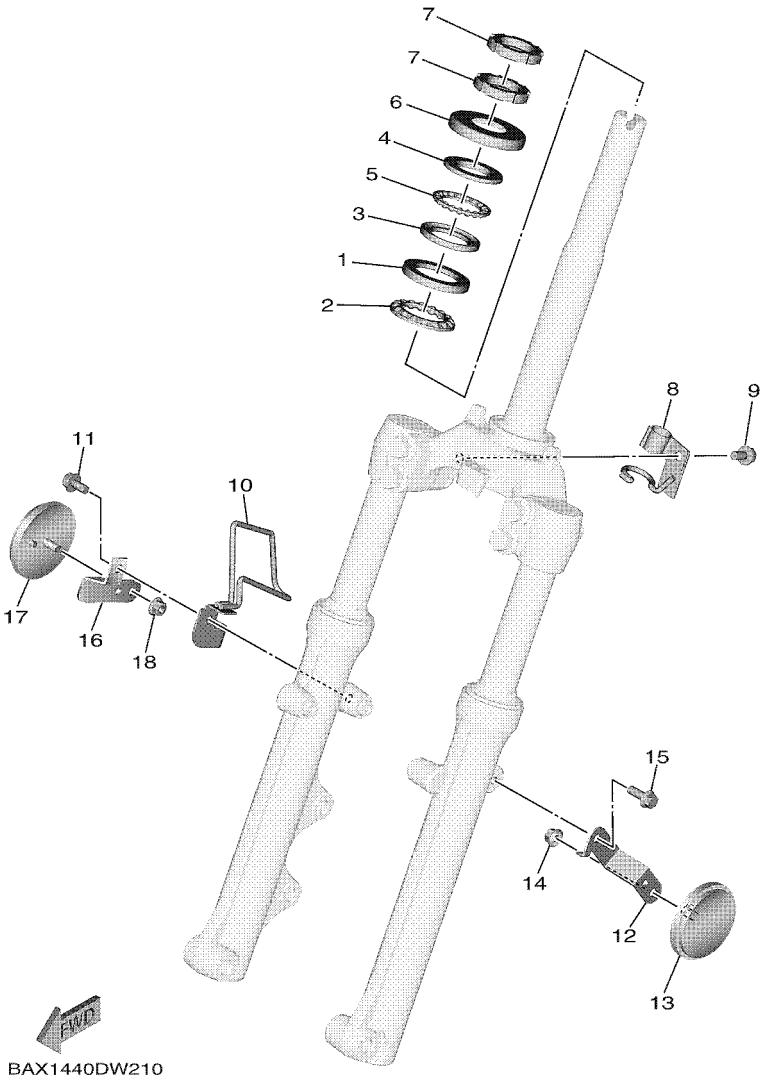


## FIG. 21 STEERING

| REF. NO. | PART NO. | DESCRIPTION | BAX2 | | | | | REMARKS |
|---|---|---|---|---|---|---|---|---|
| 1 | 1KL–F3412–10 | RACE, BALL 2 | 1 | | | | | |
| 2 | 5VL–F341E–10 | RETAINER, BALL BEARING | 1 | | | | | |
| 3 | 4RT–F3412–10 | RACE, BALL 2 | 1 | | | | | |
| 4 | 4RT–F3411–10 | RACE, BALL 1 | 1 | | | | | |
| 5 | 1P6–F341E–10 | RETAINER, BALL BEARING | 1 | | | | | |
| 6 | 5P1–F3416–01 | COVER, BALL RACE 2 | 1 | | | | | |
| 7 | 90179–25002 | NUT | 2 | | | | | |
| 8 | B5V–F587A–00 | HOLDER, BRAKE HOSE 4 | 1 | | | | | |
| 9 | 95D02–06012 | BOLT, FLANGE DEEP RECESS | 1 | | | | | |
| 10 | B17–F5876–00 | HOLDER, BRAKE HOSE 2 | 1 | | | | | |
| 11 | 95D02–06012 | BOLT, FLANGE DEEP RECESS | 1 | | | | | |
| 12 | B17–F113J–00 | BRACKET, REFLECTOR 1 | 1 | | | | | |
| 13 | 2FC–H5111–00 | REFLECTOR, 1 | 1 | | | | | |
| 14 | 90185–05803 | NUT, SELF-LOCKING | 1 | | | | | |
| 15 | 95D02–06012 | BOLT, FLANGE DEEP RECESS | 1 | | | | | |
| 16 | B17–F113K–00 | BRACKET, REFLECTOR 2 | 1 | | | | | |
| 17 | 2FC–H5111–00 | REFLECTOR, 1 | 1 | | | | | |
| 18 | 90185–05803 | NUT, SELF-LOCKING | 1 | | | | | |

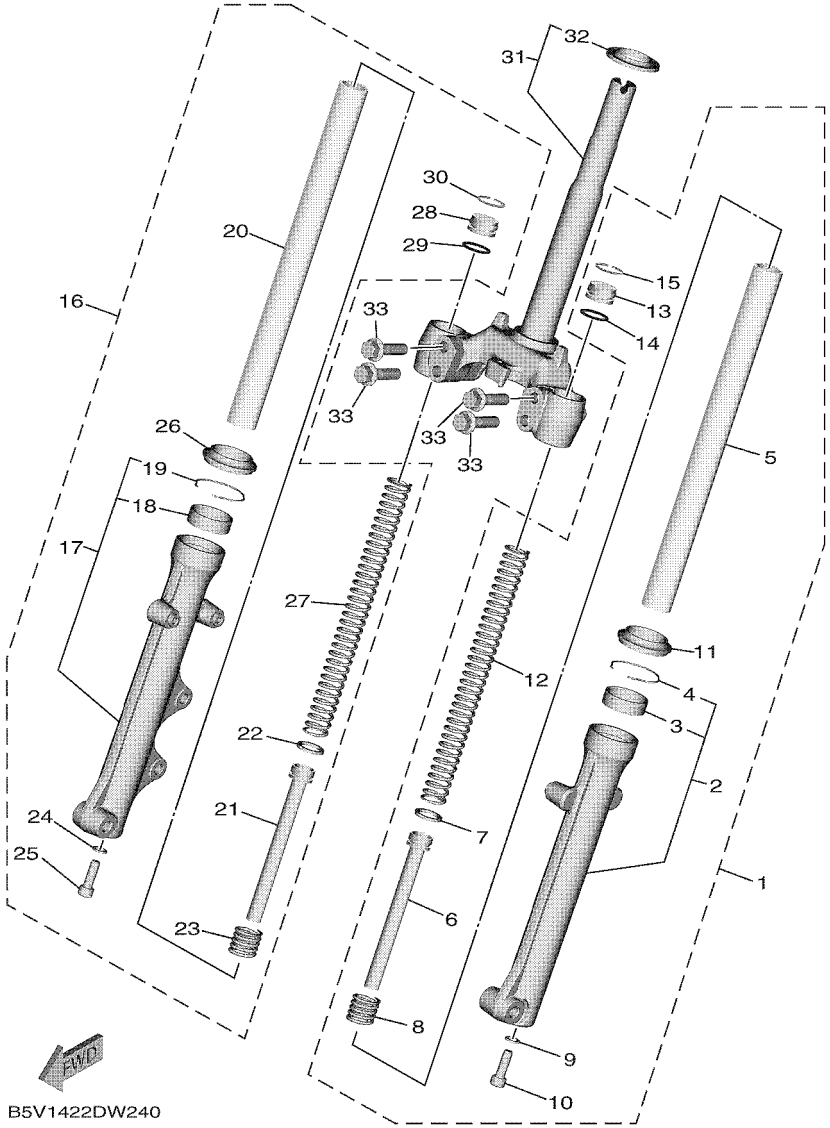


## FIG. 22 FRONT FORK

| REF. NO. | PART NO. | DESCRIPTION | BAX2 | | | | | REMARKS |
|---|---|---|---|---|---|---|---|---|
| 1 | BAX–F3102–00 | FRONT FORK ASSY (L.H) | 1 | | | | | |
| 2 | B17–F3126–00 | .TUBE, OUTER (L.H) | 1 | | | | | |
| 3 | 4UV–F3145–00 | ..OIL SEAL | 1 | | | | | |
| 4 | 5P0–F3156–00 | ..RING, SNAP | 1 | | | | | |
| 5 | BAX–F3110–00 | .INNER TUBE COMP.1 | 1 | | | | | |
| 6 | BAX–F3170–00 | .CYLINDER COMP., FRONT FORK | 1 | | | | | |
| 7 | BAX–F3157–00 | .RING, PISTON | 1 | | | | | |
| 8 | 5TF–F3152–00 | .SPRING, SUB | 1 | | | | | |
| 9 | 509–F3158–L0 | .GASKET | 1 | | | | | |
| 10 | 31D–F3181–50 | .BOLT, HEXAGON SOCKET HEAD | 1 | | | | | |
| 11 | 5LL–F3144–00 | .SEAL, DUST | 1 | | | | | |
| 12 | BAX–F3141–00 | .SPRING, FRONT FORK | 1 | | | | | |
| 13 | BAX–F3111–00 | .BOLT, CAP | 1 | | | | | |
| 14 | 2JG–F3147–00 | .O-RING | 1 | | | | | |
| 15 | 31D–F3153–00 | .RING, SNAP | 1 | | | | | |
| 16 | BAX–F3103–00 | FRONT FORK ASSY (R.H) | 1 | | | | | |
| 17 | BAX–F3136–00 | .TUBE, OUTER 2 | 1 | | | | | |
| 18 | 4UV–F3145–00 | ..OIL SEAL | 1 | | | | | |
| 19 | 5P0–F3156–00 | ..RING, SNAP | 1 | | | | | |
| 20 | BAX–F3110–00 | .INNER TUBE COMP.1 | 1 | | | | | |
| 21 | BAX–F3170–00 | .CYLINDER COMP., FRONT FORK | 1 | | | | | |
| 22 | BAX–F3157–00 | .RING, PISTON | 1 | | | | | |
| 23 | 5TF–F3152–00 | .SPRING, SUB | 1 | | | | | |
| 24 | 509–F3158–L0 | .GASKET | 1 | | | | | |
| 25 | 31D–F3181–50 | .BOLT, HEXAGON SOCKET HEAD | 1 | | | | | |
| 26 | 5LL–F3144–00 | .SEAL, DUST | 1 | | | | | |
| 27 | BAX–F3141–00 | .SPRING, FRONT FORK | 1 | | | | | |

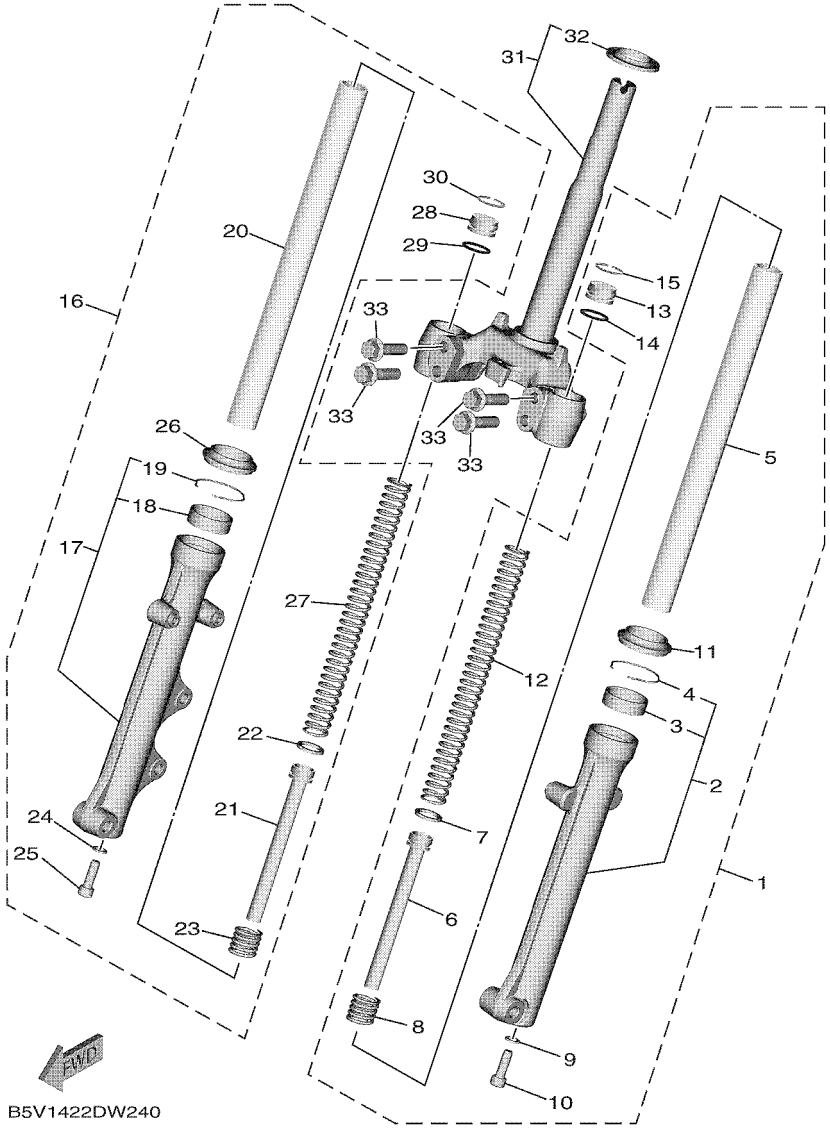


## FIG. 22 FRONT FORK

| REF. NO. | PART NO. | DESCRIPTION | BAX2 | | | | | REMARKS |
|---|---|---|---|---|---|---|---|---|
| 28 | BAX–F3111–00 | .BOLT, CAP | 1 | | | | | |
| 29 | 2JG–F3147–00 | .O-RING | 1 | | | | | |
| 30 | 31D–F3153–00 | .RING, SNAP | 1 | | | | | |
| 31 | BAX–F3340–00 | UNDER BRACKET COMP. | 1 | | | | | |
| 32 | 4FP–F3411–10 | .RACE, BALL 1 | 1 | | | | | |
| 33 | 31D–F3346–00 | BOLT 1 | 4 | | | | | |

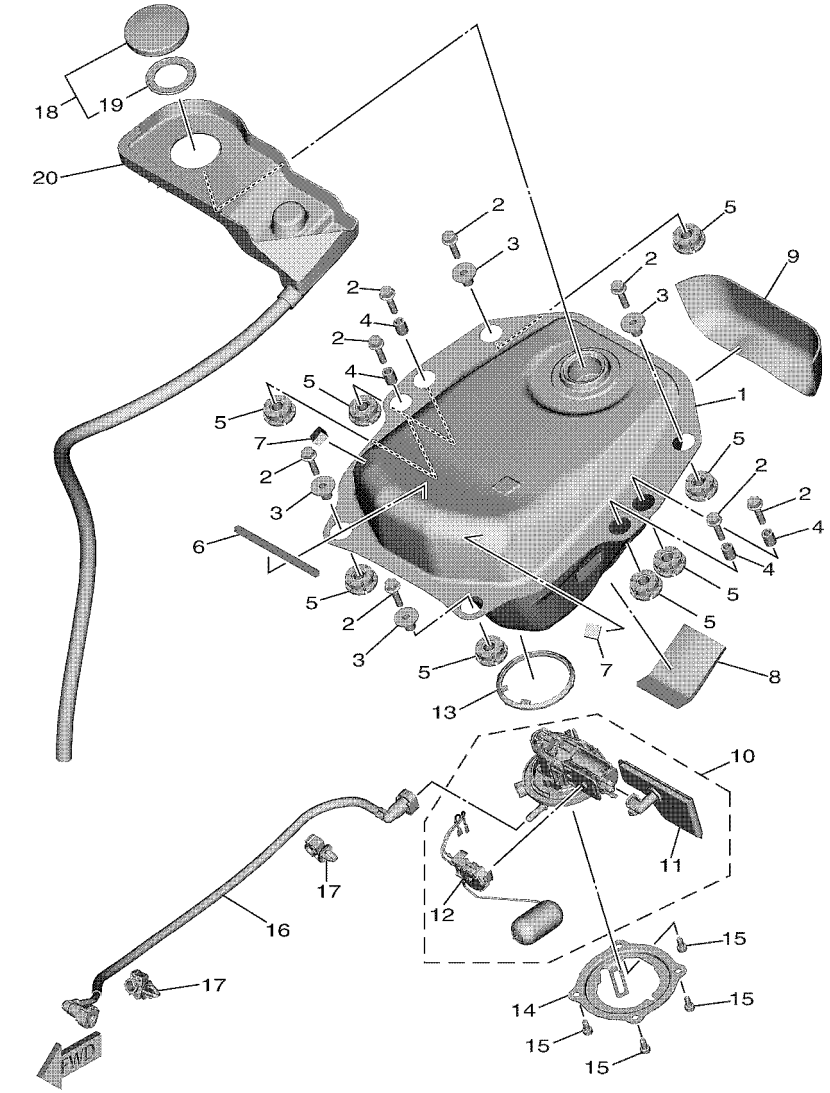


BAX1440DW230

## FIG. 23 FUEL TANK

| REF. NO. | PART NO. | DESCRIPTION | BAX2 | | | | | REMARKS |
|---|---|---|---|---|---|---|---|---|
| 1 | BAX–F4110–00 | FUEL TANK COMP. | 1 | | | | | |
| 2 | 95D32–06025 | BOLT, FLANGE DEEP RECESS | 8 | | | | | |
| 3 | 1FC–F412G–00 | COLLAR | 4 | | | | | |
| 4 | 90560–07007 | SPACER | 4 | | | | | |
| 5 | 1FC–F4339–00 | GROMMET | 8 | | | | | |
| 6 | 90520–05028 | DAMPER, PLATE | 1 | | | | | |
| 7 | 90520–08007 | DAMPER, PLATE | 2 | | | | | |
| 8 | 1S8–F8372–00 | DAMPER | 1 | | | | | |
| 9 | 90520–02859 | DAMPER, PLATE | 1 | | | | | |
| 10 | B5V–E3907–00 | FUEL PUMP COMP. | 1 | | | | | |
| 11 | 54P–E3915–00 | .FILTER, FUEL SUCTION | 1 | | | | | |
| 12 | B5V–H5752–00 | .SENDER UNIT ASSY, FUEL METER | 1 | | | | | |
| 13 | 1DB–F414G–01 | SEAL | 1 | | | | | |
| 14 | BAX–F4491–00 | BRACKET, FUEL PUMP | 1 | | | | | |
| 15 | 91332–05010 | BOLT | 4 | | | | | |
| 16 | B5V–E3971–00 | PIPE, FUEL 1 | 1 | | | | | |
| 17 | 90464–10008 | CLAMP | 2 | | | | | |
| 18 | 4YY–F4610–00 | CAP ASSY | 1 | | | | | |
| 19 | 4YY–F4612–00 | .PACKING, CAP | 1 | | | | | |
| 20 | BAX–F41B1–00 | COVER, TANK | 1 | | | | | |

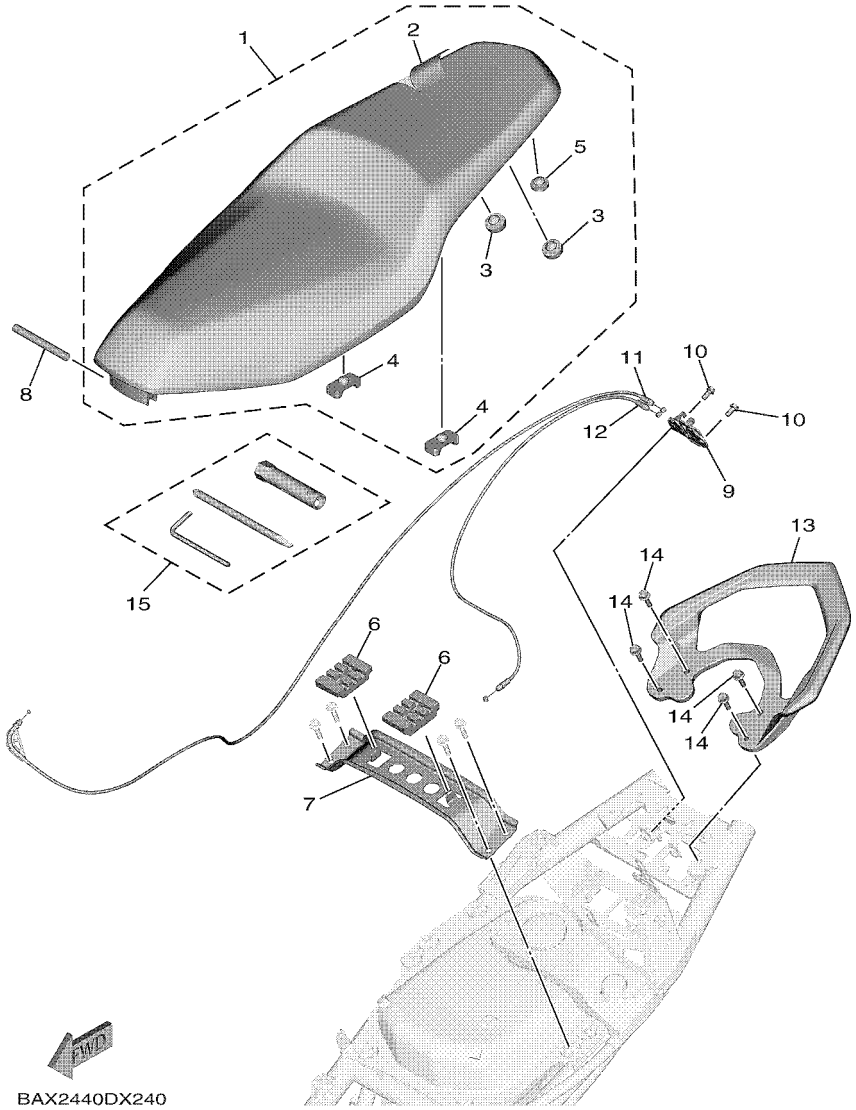


## FIG. 24 SEAT

| REF. NO. | PART NO. | DESCRIPTION | BAX2 | | | | | REMARKS |
|---|---|---|---|---|---|---|---|---|
| 1 | BAX–F4730–30 | DOUBLE SEAT ASSY | 1 | | | | | |
| 2 | BAX–F470F–30 | .SEAT COVER COMP. | 1 | | | | | |
| 3 | 1VP–F4741–10 | .PAD, SEAT | 2 | | | | | |
| 4 | BAX–F4741–00 | .PAD, SEAT | 2 | | | | | |
| 5 | BAX–F4741–10 | .PAD, SEAT | 1 | | | | | |
| 6 | BAX–F4747–00 | DAMPER, SEAT | 2 | | | | | |
| 7 | BAX–F471A–00 | STAY, SEAT | 1 | | | | | |
| 8 | 2WB–F4727–00 | PIN, SEAT FITTING | 1 | | | | | |
| 9 | B5V–F4780–00 | SEAT LOCK ASSY | 1 | | | | | |
| 10 | 95022–06012 | BOLT, FLANGE | 2 | | | | | |
| 11 | BAX–F478E–00 | CABLE, SEAT LOCK | 1 | | | | | |
| 12 | B5V–F479D–00 | WIRE, SEAT LOCK 2 | 1 | | | | | |
| 13 | BAX–F4773–00–P3 | HANDLE, SEAT | 1 | | | | | SMX FOR MBM3 |
| 14 | 95D32–06020 | BOLT, FLANGE DEEP RECESS | 4 | | | | | |
| 15 | BAX–F8100–00 | TOOL KIT | 1 | | | | | |

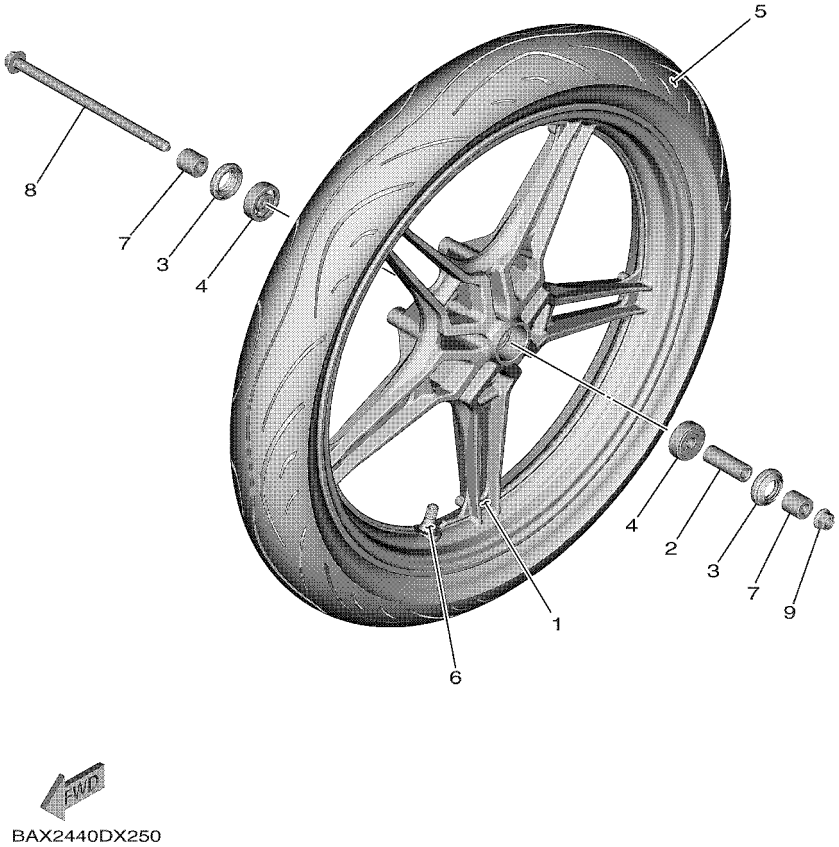


## FIG. 25 FRONT WHEEL

| REF. NO. | PART NO. | DESCRIPTION | BAX2 | | | | | REMARKS |
|---|---|---|---|---|---|---|---|---|
| 1 | B17–F5168–10–P3 | CAST WHEEL, FRONT | 1 | | | | | MVBS1 FOR MBM3 |
| 2 | 90560–10292 | SPACER | 1 | | | | | |
| 3 | 93106–20816 | OIL SEAL | 2 | | | | | |
| 4 | 93306–300YN | BEARING | 2 | | | | | |
| 5 | 94109–17809 | TIRE(90/80-17 M/C 46P DM1060F) | 1 | | | | | DURO |
| 6 | 93900–00817 | VALVE, RIM (TR412) | 1 | | | | | |
| 7 | 90387–10277 | COLLAR | 2 | | | | | |
| 8 | B6A–F5181–00 | AXLE, WHEEL | 1 | | | | | |
| 9 | 95602–10200 | NUT, S/L FLANGE | 1 | | | | | |

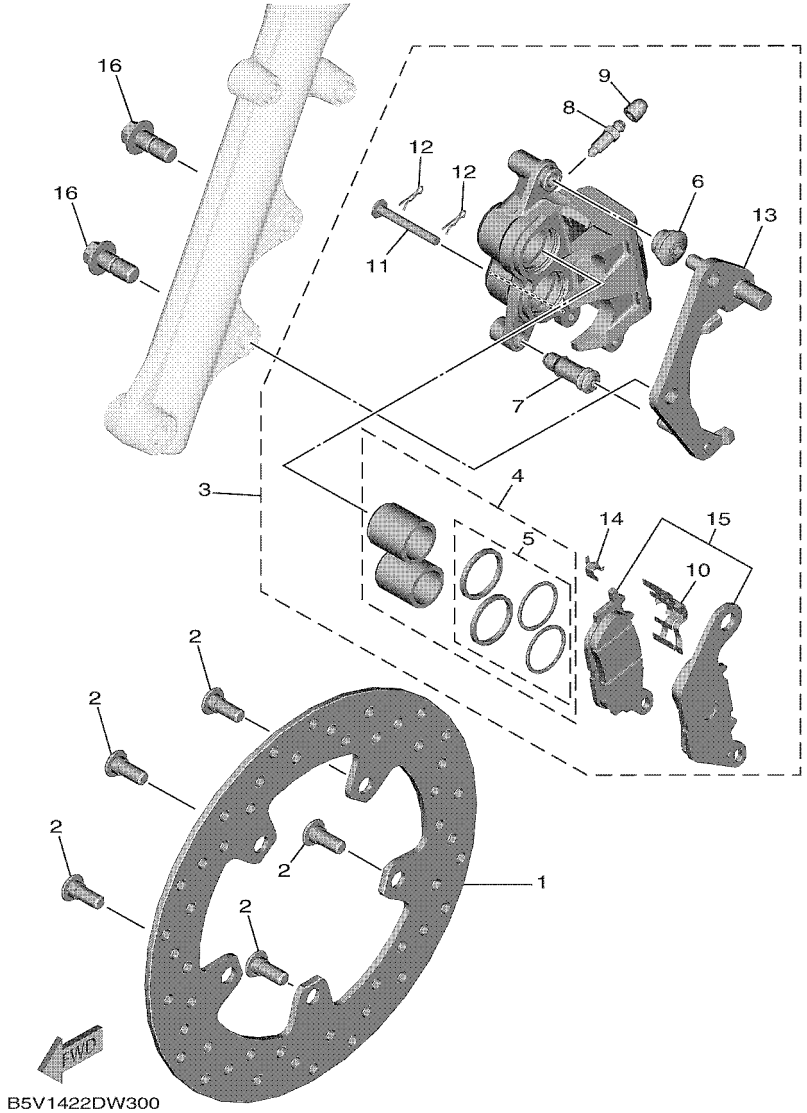


## FIG. 26 FRONT BRAKE CALIPER

| REF. NO. | PART NO. | DESCRIPTION | BAX2 | | | | | REMARKS |
|---|---|---|---|---|---|---|---|---|
| 1 | B5V–F582U–01 | DISK, BRAKE (RIGHT) | 1 | | | | | |
| 2 | 90109–08087 | BOLT | 5 | | | | | |
| 3 | BAX–F580U–00 | CALIPER ASSY (RIGHT) | 1 | | | | | |
| 4 | 3C1–F5802–00 | .PISTON ASSY, CALIPER | 1 | | | | | |
| 5 | 3C1–F5803–50 | ..CALIPER SEAL KIT | 1 | | | | | |
| 6 | 5YP–F5917–00 | .BOOT, CALIPER | 1 | | | | | |
| 7 | 5YP–F5937–00 | .BOOT 2 | 1 | | | | | |
| 8 | 47X–25824–01 | .SCREW, BLEED | 1 | | | | | |
| 9 | 2NL–F5825–00 | .CAP | 1 | | | | | |
| 10 | 5P0–F5919–01 | .SUPPORT, PAD | 1 | | | | | |
| 11 | 5YP–F5924–00 | .PIN, PAD | 1 | | | | | |
| 12 | 5YP–F5925–01 | .CLIP | 2 | | | | | |
| 13 | 1DB–F5921–01 | .BRACKET, SUPPORT | 1 | | | | | |
| 14 | 5YP–F5939–00 | .CLIP, PAD | 1 | | | | | |
| 15 | B5V–F5805–00 | .BRAKE PAD KIT | 1 | | | | | |
| 16 | 90105–108A6 | BOLT, FLANGE | 2 | | | | | |

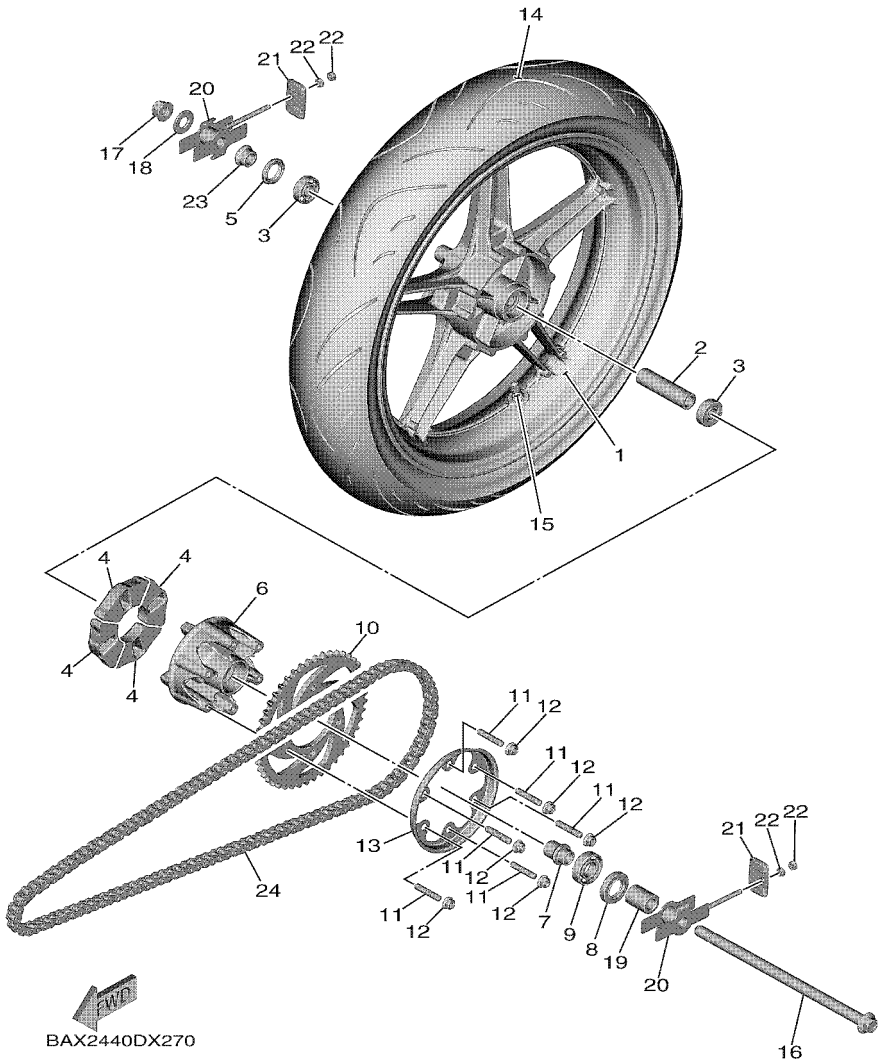


## FIG. 27 REAR WHEEL

| REF. NO. | PART NO. | DESCRIPTION | BAX2 | | | | | REMARKS |
|---|---|---|---|---|---|---|---|---|
| 1 | B17–F5338–10–P4 | CAST WHEEL, REAR | 1 | | | | | VYRS6 FOR MBM3 |
| 2 | B17–F5317–00 | SPACER, BEARING | 1 | | | | | |
| 3 | 933A6–202Y9 | BEARING | 2 | | | | | |
| 4 | B17–F5364–00 | DAMPER | 4 | | | | | |
| 5 | 93106–22808 | OIL SEAL | 1 | | | | | |
| 6 | B17–F5366–00 | CLUTCH, HUB | 1 | | | | | |
| 7 | B17–F5377–00 | COLLAR, WHEEL | 1 | | | | | |
| 8 | 93106–26815 | OIL SEAL | 1 | | | | | |
| 9 | 93306–004XV | BEARING | 1 | | | | | |
| 10 | BAX–F5446–00 | SPROCKET, DRIVEN (46T) | 1 | | | | | |
| 11 | 90116–08826 | BOLT, STUD | 6 | | | | | |
| 12 | 95602–08200 | NUT, U FLANGE | 6 | | | | | |
| 13 | BAX–F5689–00 | PLATE, GUIDE | 1 | | | | | |
| 14 | 94112–17809 | TIRE (120/70-70 M/C 58P) | 1 | | | | | DURO |
| 15 | 93900–00817 | VALVE, RIM (TR412) | 1 | | | | | |
| 16 | B5V–F5381–00 | AXLE, WHEEL | 1 | | | | | |
| 17 | 95602–14200 | NUT, SELF-LOCKING | 1 | | | | | |
| 18 | 90201–15030 | WASHER, PLATE | 1 | | | | | |
| 19 | 90387–15830 | COLLAR | 1 | | | | | |
| 20 | BAX–F5388–00 | PULLER, CHAIN 1 | 2 | | | | | |
| 21 | BAX–F2174–00 | END 1 | 2 | | | | | |
| 22 | 95302–06600 | NUT, HEXAGON | 4 | | | | | |
| 23 | B17–F5383–00 | COLLAR, WHEEL | 1 | | | | | |
| 24 | 94568–K8124 | CHAIN (RK 428-124L) | 1 | | | | | |

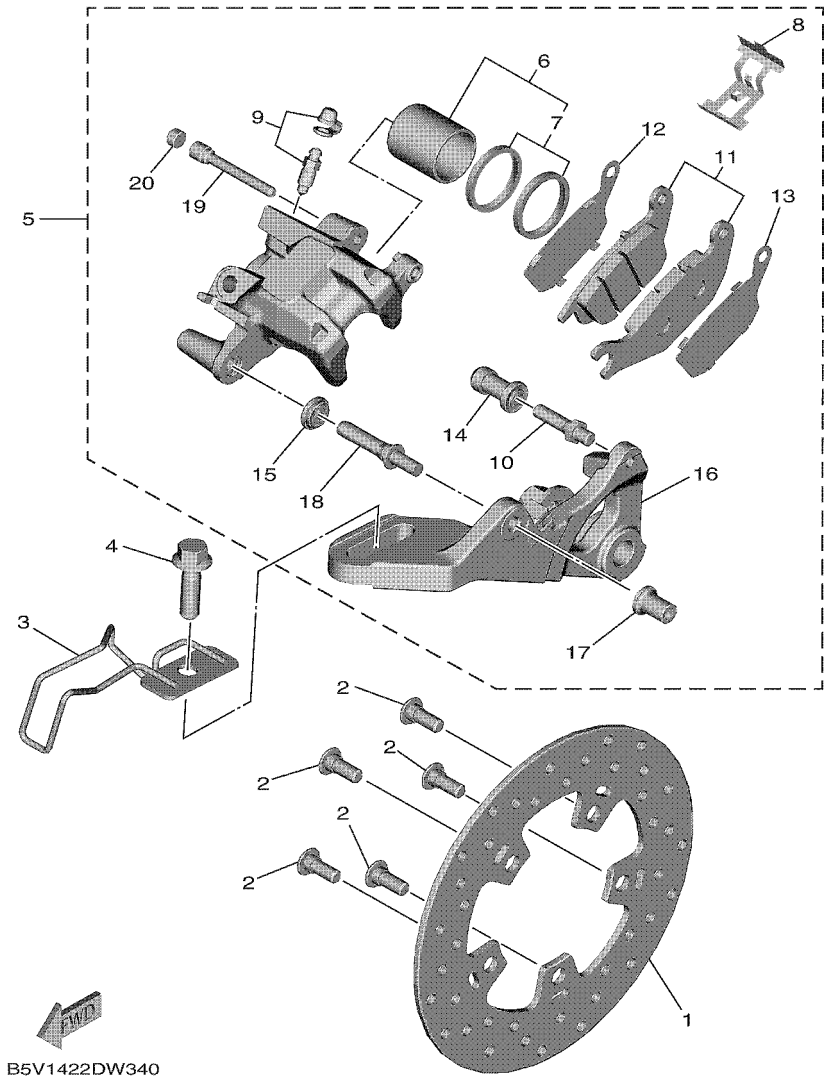


## FIG. 28 REAR BRAKE CALIPER

| REF. NO. | PART NO. | DESCRIPTION | BAX2 | | | | | REMARKS |
|---|---|---|---|---|---|---|---|---|
| 1 | B17–F582W–00 | DISK, REAR BRAKE 2 | 1 | | | | | |
| 2 | 90109–08087 | BOLT | 5 | | | | | |
| 3 | BAX–F2167–00 | GUIDE | 1 | | | | | |
| 4 | 95D32–10035 | BOLT, FLANGE DEEP RECESS | 1 | | | | | |
| 5 | 2PV–F580W–00 | CALIPER ASSY, REAR 2 | 1 | | | | | |
| 6 | 50C–F5802–00 | .PISTON ASSY, CALIPER | 1 | | | | | |
| 7 | 3GD–25803–00 | ..CALIPER SEAL KIT | 1 | | | | | |
| 8 | 50C–F5919–00 | .SUPPORT, PAD | 1 | | | | | |
| 9 | 50C–W0048–00 | .BLEED SCREW KIT | 1 | | | | | |
| 10 | 50C–F5914–00 | .PIN, SLIDE | 1 | | | | | |
| 11 | 1PA–F5806–00 | .BRAKE PAD KIT 2 | 1 | | | | | |
| 12 | 50C–F5827–00 | .SHIM, CALIPER | 1 | | | | | |
| 13 | 50C–F5828–00 | .SHIM, CALIPER | 1 | | | | | |
| 14 | 50C–F5937–00 | .BOOT 2 | 1 | | | | | |
| 15 | 50C–F5917–00 | .BOOT, CALIPER | 1 | | | | | |
| 16 | 1PA–F5921–01 | .BRACKET, SUPPORT | 1 | | | | | |
| 17 | 50C–F5961–00 | .NUT | 1 | | | | | |
| 18 | 50C–2536G–00 | .PIN | 1 | | | | | |
| 19 | 50C–F5933–00 | .PIN HANGER | 1 | | | | | |
| 20 | 50C–F5916–00 | .PLUG | 1 | | | | | |

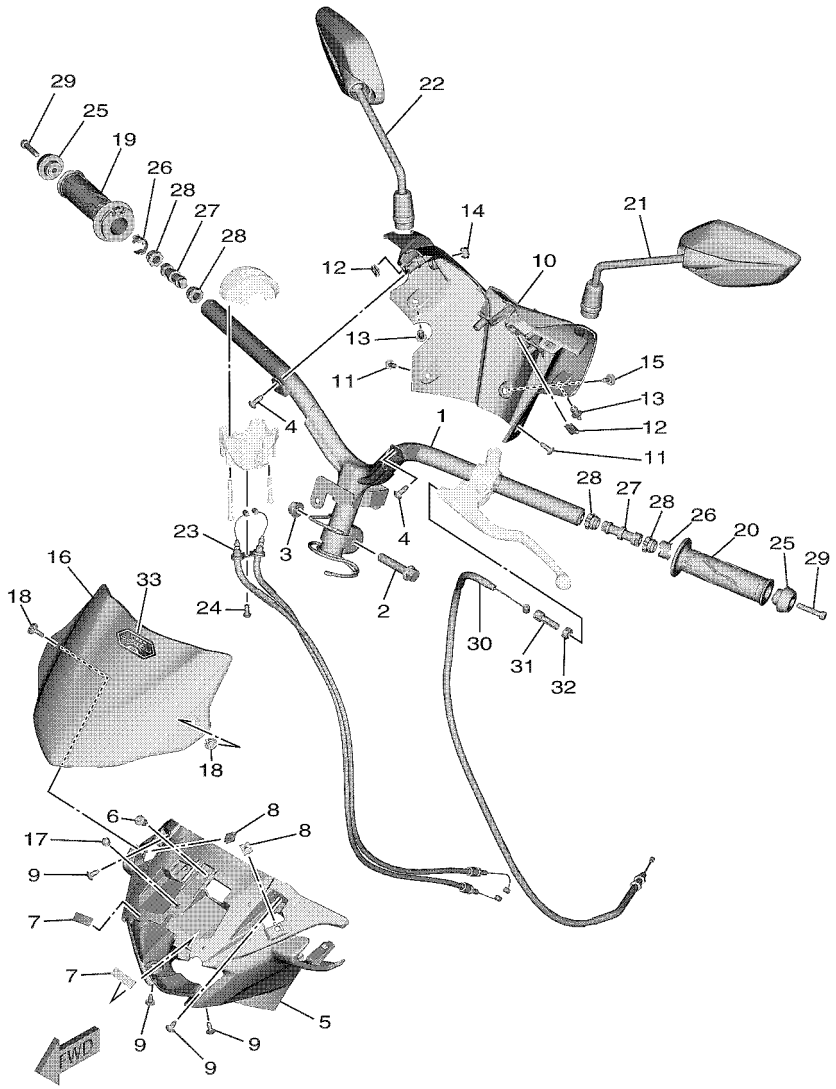


## FIG. 29 STEERING HANDLE & CABLE

| REF. NO. | PART NO. | DESCRIPTION | BAX2 | | | | | REMARKS |
|---|---|---|---|---|---|---|---|---|
| 1 | BAX–F6110–00 | HANDLE COMP. | 1 | | | | | |
| 2 | 90105–10896 | BOLT, FLANGE | 1 | | | | | |
| 3 | 90185–10011 | NUT, SELF-LOCKING | 1 | | | | | |
| 4 | 90160–05012 | SCREW, ROUND TAPPING | 2 | | | | | |
| 5 | BAX–F6143–00 | COVER, HANDLE UPPER 1 | 1 | | | | | |
| 6 | 90269–06816 | RIVET | 1 | | | | | |
| 7 | 90520–02014 | DAMPER, PLATE | 2 | | | | | |
| 8 | 90183–05061 | NUT, SPRING | 2 | | | | | |
| 9 | 97707–50012 | SCREW, TRUSS HEAD TAPPING | 4 | | | | | |
| 10 | BAX–F6145–00 | COVER, HANDLE UPPER 2 | 1 | | | | | |
| 11 | 90160–05009 | SCREW, ROUND TAPPING | 2 | | | | | |
| 12 | 90183–05807 | NUT, SPRING | 2 | | | | | |
| 13 | 90269–06816 | RIVET | 2 | | | | | |
| 14 | 1S8–F6199–00 | PLUG, BLIND | 1 | | | | | |
| 15 | 90111–05049 | BOLT,HEX. SOCKET BUTTON | 1 | | | | | |
| 16 | BAX–F61AA–00–P3 | VISOR | 1 | | | | | MBM3 |
| 17 | BAX–F1717–00 | DAMPER | 1 | | | | | |
| 18 | 90111–05817 | BOLT,HEX. SOCKET BUTTON | 2 | | | | | |
| 19 | B17–F6240–02 | GRIP ASSY | 1 | | | | | |
| 20 | 1VP–F6241–00 | GRIP | 1 | | | | | |
| 21 | B17–F6280–10 | REAR VIEW MIRROR ASSY (LEFT) | 1 | | | | | |
| 22 | B17–F6290–10 | REAR VIEW MIRROR ASSY (RIGHT) | 1 | | | | | |
| 23 | BAX–F6301–00 | THROTTLE CABLE ASSY | 1 | | | | | |
| 24 | 92012–05012 | BOLT, BUTTON HEAD | 1 | | | | | |
| 25 | BAX–F6246–00 | END, GRIP | 2 | | | | | |
| 26 | 16S–F6257–00 | STOPPER | 2 | | | | | |
| 27 | BAX–F622H–00 | WEIGHT | 2 | | | | | |

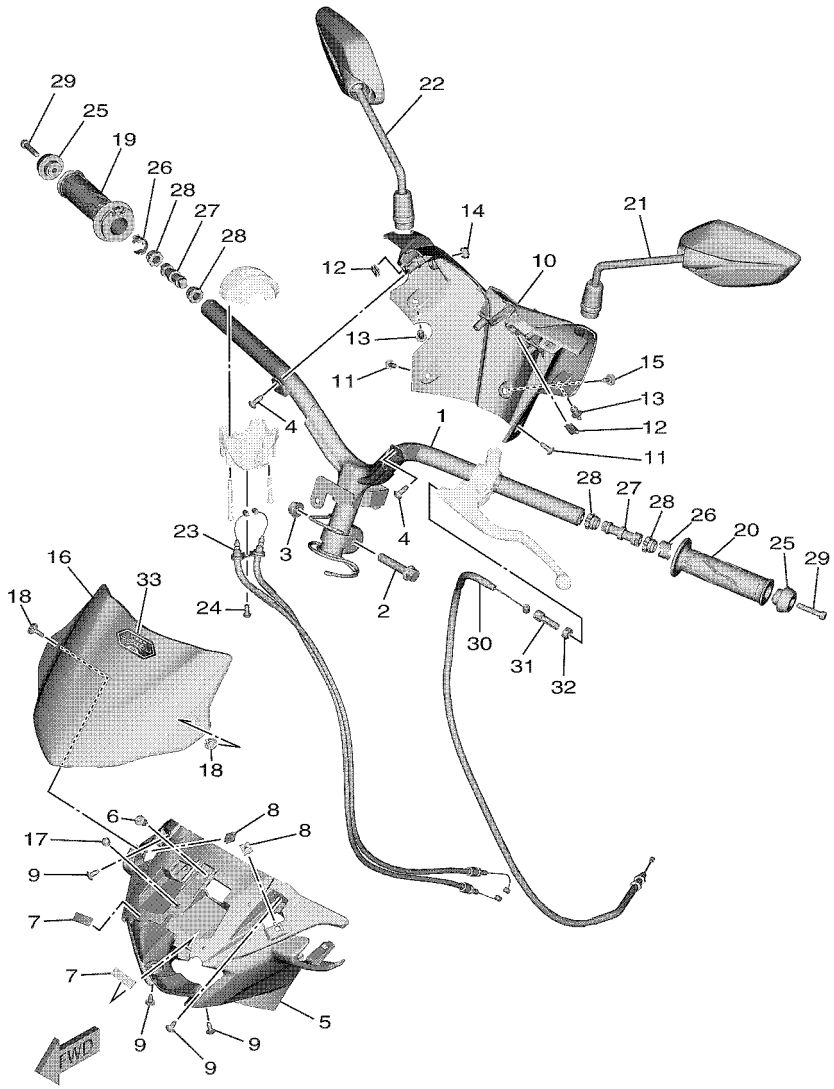


## FIG. 29 STEERING HANDLE & CABLE

| REF. NO. | PART NO. | DESCRIPTION | BAX2 | | | | | REMARKS |
|---|---|---|---|---|---|---|---|---|
| 28 | 1S8–F622F–00 | DAMPER, LOCATING 1 | 4 | | | | | |
| 29 | 91317–06030 | BOLT,HEX.SOCKET HEAD | 2 | | | | | |
| 30 | BAX–F6335–00 | WIRE, CLUTCH | 1 | | | | | |
| 31 | 90123–08046 | BOLT | 1 | | | | | |
| 32 | 90170–08401 | NUT | 1 | | | | | |
| 33 | BAX–26031–00 | EMBLEM, 3D | 1 | | | | | |

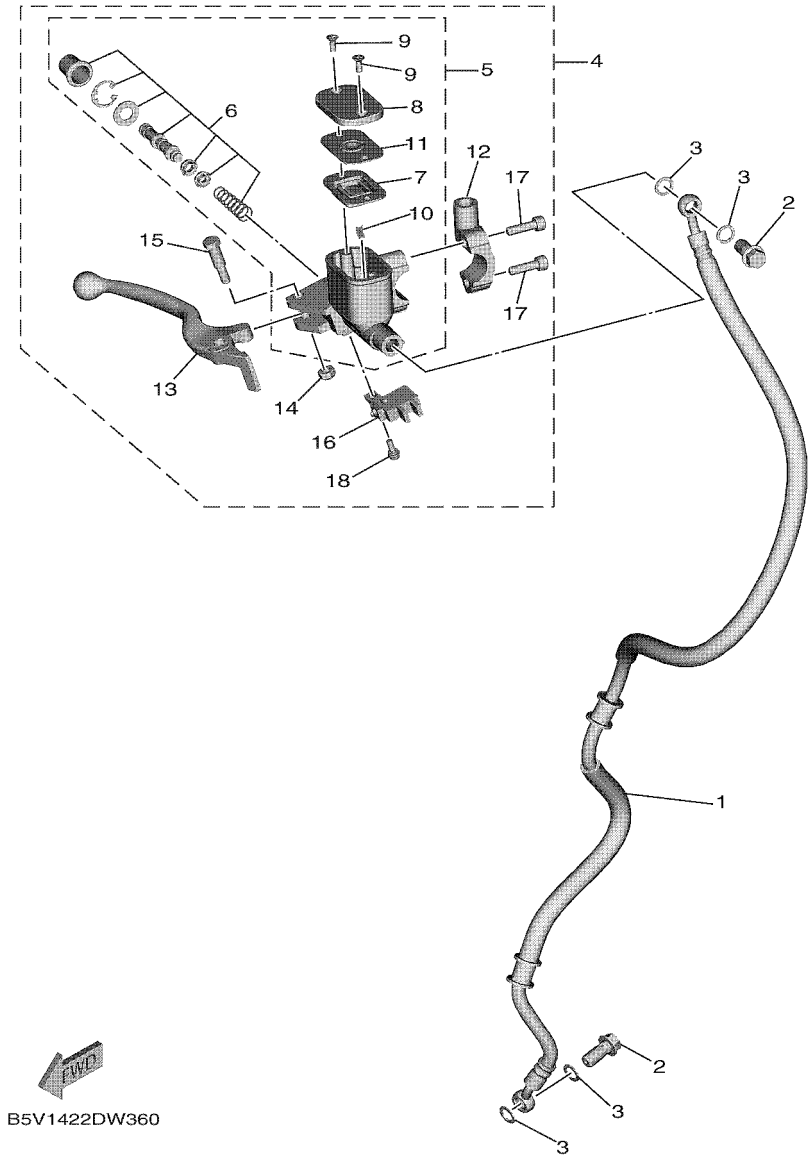


## FIG. 30 FRONT MASTER CYLINDER

| REF. NO. | PART NO. | DESCRIPTION | BAX2 | | | | | REMARKS |
|---|---|---|---|---|---|---|---|---|
| 1 | B5V–F5872–00 | HOSE, BRAKE 1 | 1 | | | | | |
| 2 | 90401–10812 | BOLT, UNION | 2 | | | | | |
| 3 | 90201–10118 | WASHER, PLATE | 4 | | | | | |
| 4 | B5V–F583T–00 | MASTER CYLINDER ASSY | 1 | | | | | |
| 5 | 2ND–F5870–00 | .MASTER CYLINDER SUB ASSY | 1 | | | | | |
| 6 | 5P0–F580A–00 | ..CYLINDER KIT, MASTER | 1 | | | | | |
| 7 | 2ND–F5854–00 | ..DIAPHRAGM, RESERVOIR | 1 | | | | | |
| 8 | 2ND–F5852–00 | ..CAP, RESERVOIR | 1 | | | | | |
| 9 | 36Y–2589H–00 | ..SCREW | 2 | | | | | |
| 10 | 3RW–F5889–00 | ..SEPARATOR | 1 | | | | | |
| 11 | 2ND–F5855–00 | ..BUSH,DIAPHRAGM | 1 | | | | | |
| 12 | 5TL–F5867–11 | .BRACKET,MASTER CYLINDER(BLACK) | 1 | | | | | |
| 13 | 2ND–H3922–00 | .LEVER 2 | 1 | | | | | |
| 14 | 95602–06100 | .NUT, SELF-LOCKING | 1 | | | | | |
| 15 | 90109–06577 | .BOLT | 1 | | | | | |
| 16 | B6H–H3980–00 | .FRONT STOP SWITCH ASSY | 1 | | | | | |
| 17 | 91317–06025 | .BOLT,HEX.SOCKET HEAD | 2 | | | | | |
| 18 | 97602–04312 | .SCREW, PAN HEAD WITH WASHER | 1 | | | | | |

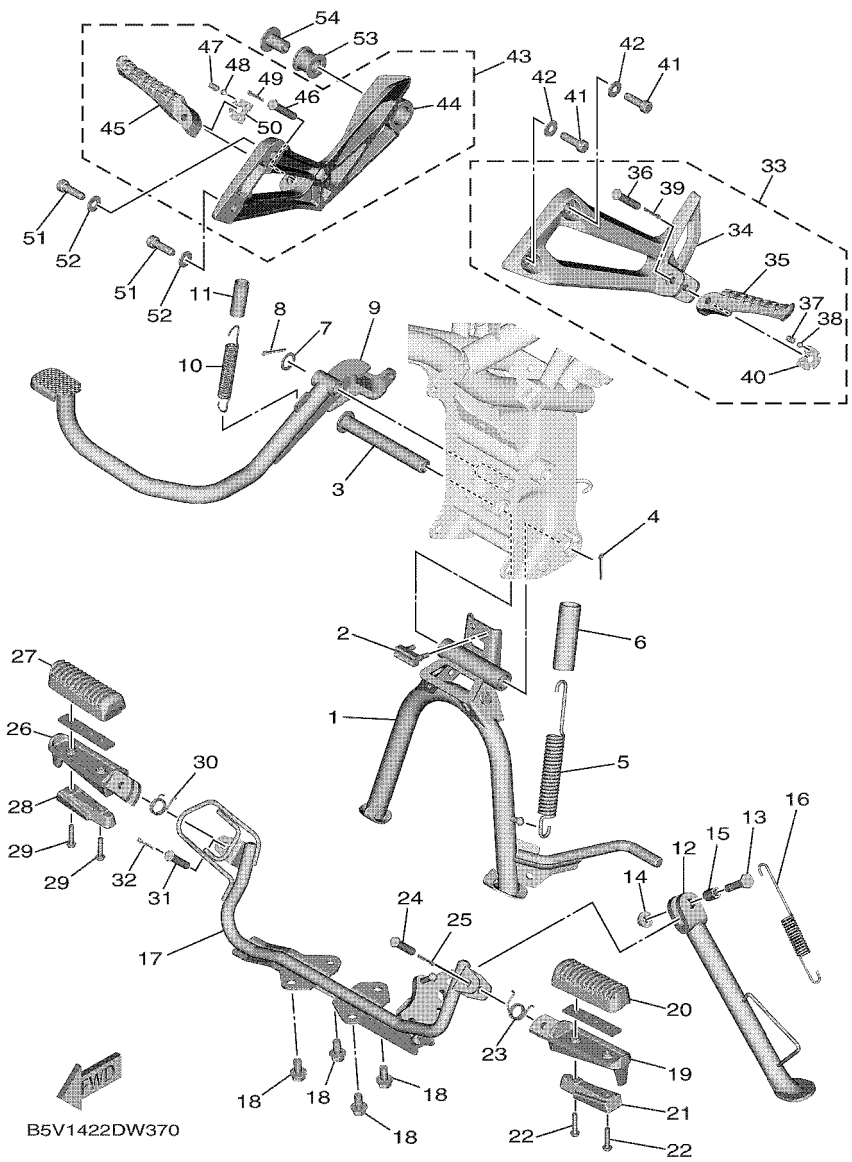


## FIG. 31 STAND & FOOTREST

| REF. NO. | PART NO. | DESCRIPTION | BAX2 | | | | | REMARKS |
|---|---|---|---|---|---|---|---|---|
| 1 | B17–F7111–10 | STAND, MAIN | 1 | | | | | |
| 2 | 31D–F7114–00 | STOPPER, MAIN STAND | 1 | | | | | |
| 3 | 5YP–F7112–00 | SHAFT, MAIN STAND | 1 | | | | | |
| 4 | 91401–30030 | PIN, COTTER | 1 | | | | | |
| 5 | 90506–35806 | SPRING, TENSION | 1 | | | | | |
| 6 | 90445–22800 | HOSE | 1 | | | | | |
| 7 | 90201–14811 | WASHER, PLATE | 1 | | | | | |
| 8 | 91401–30030 | PIN, COTTER | 1 | | | | | |
| 9 | BAX–F7211–00 | PEDAL, BRAKE | 1 | | | | | |
| 10 | 90506–20041 | SPRING, TENSION | 1 | | | | | |
| 11 | 90446–15386 | HOSE | 1 | | | | | |
| 12 | BAX–F7311–00 | STAND, SIDE | 1 | | | | | |
| 13 | 90101–08829 | BOLT | 1 | | | | | |
| 14 | 95602–08200 | NUT, U FLANGE | 1 | | | | | |
| 15 | 90387–08820 | COLLAR | 1 | | | | | |
| 16 | 90506–26814 | SPRING, TENSION | 1 | | | | | |
| 17 | BAX–F7411–00 | FOOTREST 1 | 1 | | | | | |
| 18 | 95D32–08016 | BOLT, FLANGE DEEP RECESS | 4 | | | | | |
| 19 | BAX–F7451–00 | FOOTREST 3 | 1 | | | | | |
| 20 | B17–F7413–00 | COVER, FOOTREST | 1 | | | | | |
| 21 | B5V–F741E–00 | ARM 2 | 1 | | | | | |
| 22 | 97602–05225 | SCREW, PAN HEAD WITH WASHER | 2 | | | | | |
| 23 | 90508–183B9 | SPRING, TORSION | 1 | | | | | |
| 24 | 91701–08035 | PIN | 1 | | | | | |
| 25 | 91401–25015 | PIN, COTTER | 1 | | | | | |
| 26 | BAX–F7461–00 | FOOTREST 4 | 1 | | | | | |
| 27 | B17–F7413–00 | COVER, FOOTREST | 1 | | | | | |

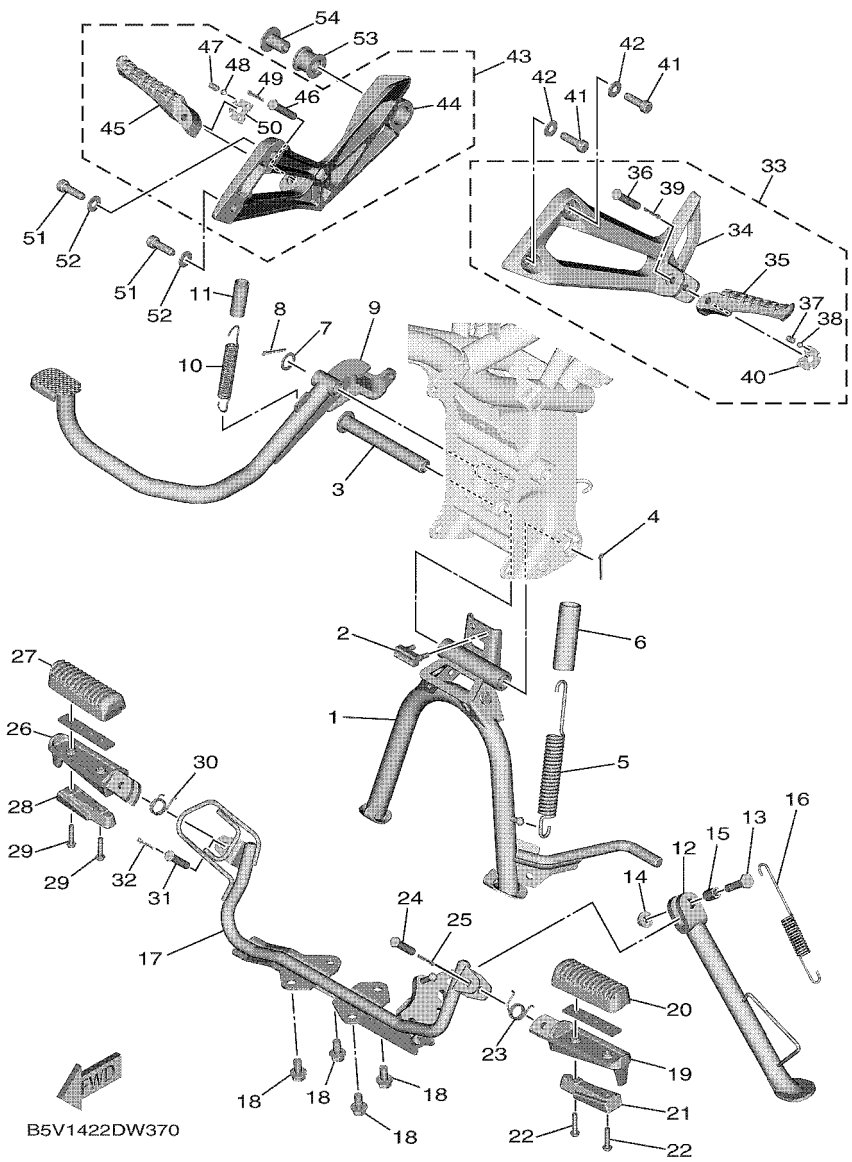


## FIG. 31 STAND & FOOTREST

| REF. NO. | PART NO. | DESCRIPTION | BAX2 | | | | | REMARKS |
|---|---|---|---|---|---|---|---|---|
| 28 | B5V–F741E–00 | ARM 2 | 1 | | | | | |
| 29 | 97602–05225 | SCREW, PAN HEAD WITH WASHER | 2 | | | | | |
| 30 | 90508–183B9 | SPRING, TORSION | 1 | | | | | |
| 31 | 91701–08035 | PIN | 1 | | | | | |
| 32 | 91401–25015 | PIN, COTTER | 1 | | | | | |
| 33 | B17–F7430–00–P0 | REAR FOOTREST ASSY 1 | 1 | | | | | MBL2 FOR MBM3 |
| 34 | B17–F7452–00–P0 | .BRACKET, FOOTREST 1 | 1 | | | | | MBL2 FOR MBM3 |
| 35 | 3C1–F7431–01 | .FOOTREST, REAR 1 | 1 | | | | | |
| 36 | 91702–08042 | .PIN, CLEVIS | 1 | | | | | |
| 37 | 90501–12743 | .SPRING, COMPRESSION | 1 | | | | | |
| 38 | 93501–04823 | .BALL | 1 | | | | | |
| 39 | 91401–25015 | .PIN, COTTER | 1 | | | | | |
| 40 | B17–F7437–00 | .WASHER, SPECIAL | 1 | | | | | |
| 41 | 91312–08025 | BOLT, HEXAGON SOCKET HEAD | 2 | | | | | |
| 42 | 90201–08043 | WASHER, PLATE | 2 | | | | | |
| 43 | B17–F7440–00–P0 | REAR FOOTREST ASSY 2 | 1 | | | | | MBL2 FOR MBM3 |
| 44 | B17–F7462–00–P0 | .BRACKET, FOOTREST 2 | 1 | | | | | MBL2 FOR MBM3 |
| 45 | 3C1–F7441–01 | .FOOTREST, REAR 2 | 1 | | | | | |
| 46 | 91702–08042 | .PIN, CLEVIS | 1 | | | | | |
| 47 | 90501–12743 | .SPRING, COMPRESSION | 1 | | | | | |
| 48 | 93501–04823 | .BALL | 1 | | | | | |
| 49 | 91401–25015 | .PIN, COTTER | 1 | | | | | |
| 50 | B17–F7437–00 | .WASHER, SPECIAL | 1 | | | | | |
| 51 | 91312–08025 | BOLT, HEXAGON SOCKET HEAD | 2 | | | | | |
| 52 | 90201–08043 | WASHER, PLATE | 2 | | | | | |
| 53 | B17–E4747–00 | DAMPER, MUFFLER | 1 | | | | | |
| 54 | 90387–08812 | COLLAR | 1 | | | | | |

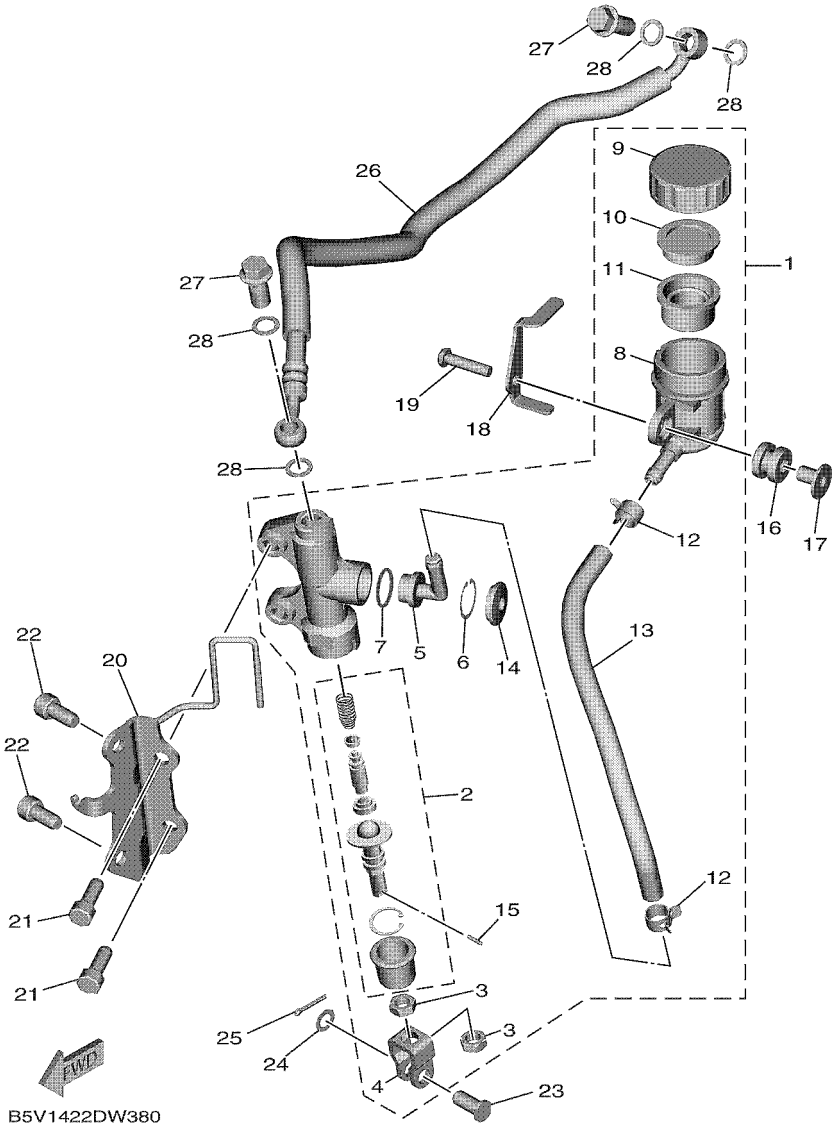


## FIG. 32 REAR MASTER CYLINDER

| REF. NO. | PART NO. | DESCRIPTION | BAX2 | | | | | REMARKS |
|---|---|---|---|---|---|---|---|---|
| 1 | 2ND–F580E–00 | REAR MASTER CYLINDER ASSY | 1 | | | | | |
| 2 | 2ND–F5808–00 | .CYLINDER KIT, MASTER | 1 | | | | | |
| 3 | 95301–08700 | .NUT | 2 | | | | | |
| 4 | 50C–F7222–00 | .JOINT | 1 | | | | | |
| 5 | 50C–F582A–50 | .JOINT | 1 | | | | | |
| 6 | 50C–F5866–00 | .CIRCLIP | 1 | | | | | |
| 7 | 93210–15620 | .O-RING | 1 | | | | | |
| 8 | 50C–F5894–11 | .TANK, RESERVOIR | 1 | | | | | |
| 9 | 50C–F5852–00 | .CAP, RESERVOIR | 1 | | | | | |
| 10 | 50C–F5855–00 | .BUSH,DIAPHRAGM | 1 | | | | | |
| 11 | 2VN–F5854–00 | .DIAPHRAGM, RESERVOIR | 1 | | | | | |
| 12 | 90467–12085 | .CLIP | 2 | | | | | |
| 13 | 4S3–F5895–00 | .HOSE, RESERVOIR | 1 | | | | | |
| 14 | 50C–F589A–00 | .COVER, DUST | 1 | | | | | |
| 15 | 5BU–27234–00 | .PIN, BRAKE ROD | 1 | | | | | |
| 16 | 55C–F4742–00 | GROMMET | 1 | | | | | |
| 17 | 55C–F6259–00 | COLLAR | 1 | | | | | |
| 18 | BAX–F5888–00 | COVER, RESERVOIR TANK | 1 | | | | | |
| 19 | 98507–06025 | SCREW, PAN HEAD | 1 | | | | | |
| 20 | BAX–F133F–00 | BRACKET, MASTER CYLINDER | 1 | | | | | |
| 21 | 91317–08020 | BOLT,HEX.SOCKET HEAD | 2 | | | | | |
| 22 | 91317–08016 | BOLT,HEX.SOCKET HEAD | 2 | | | | | |
| 23 | 90240–08005 | PIN, CLEVIS | 1 | | | | | |
| 24 | 90201–08066 | WASHER, PLATE | 1 | | | | | |
| 25 | 91401–20012 | PIN, COTTER | 1 | | | | | |
| 26 | B5V–F5873–00 | HOSE, BRAKE 2 | 1 | | | | | |
| 27 | 90401–10812 | BOLT, UNION | 2 | | | | | |

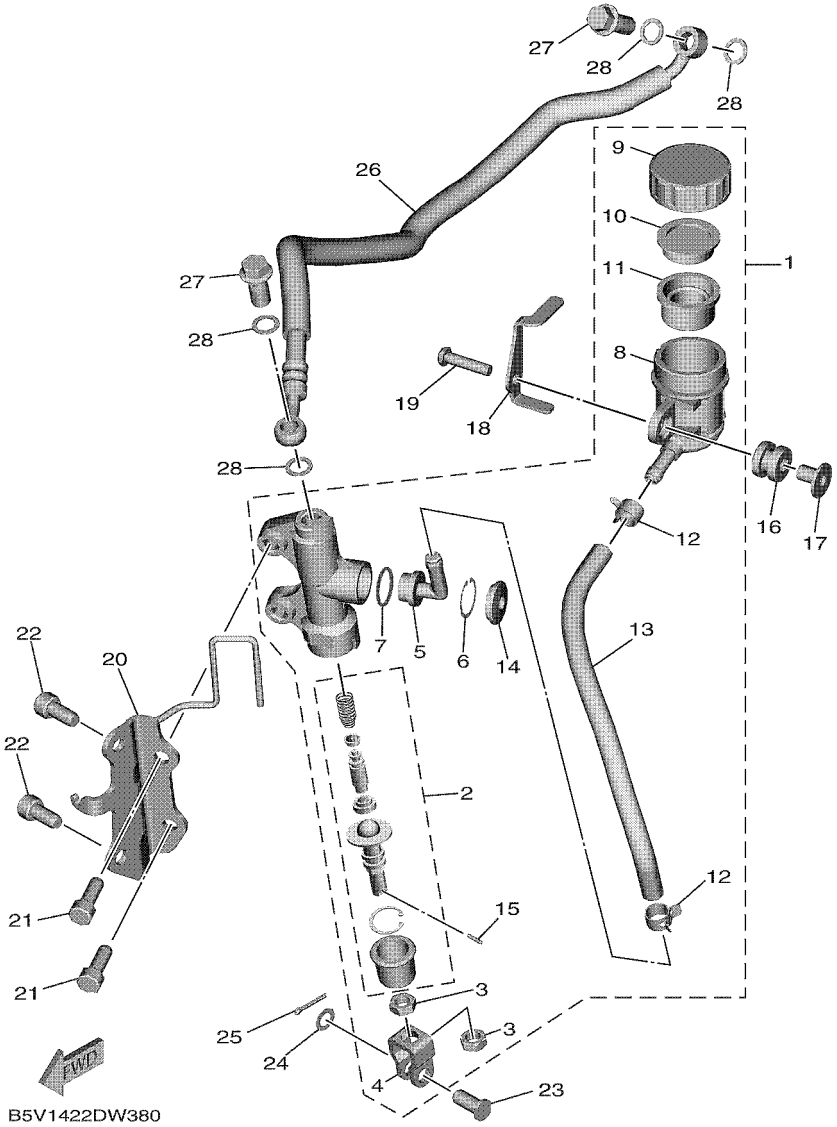


## FIG. 32 REAR MASTER CYLINDER

| REF. NO. | PART NO. | DESCRIPTION | BAX2 | | | | | REMARKS |
|---|---|---|---|---|---|---|---|---|
| 28 | 90201–10118 | WASHER, PLATE | 4 | | | | | |

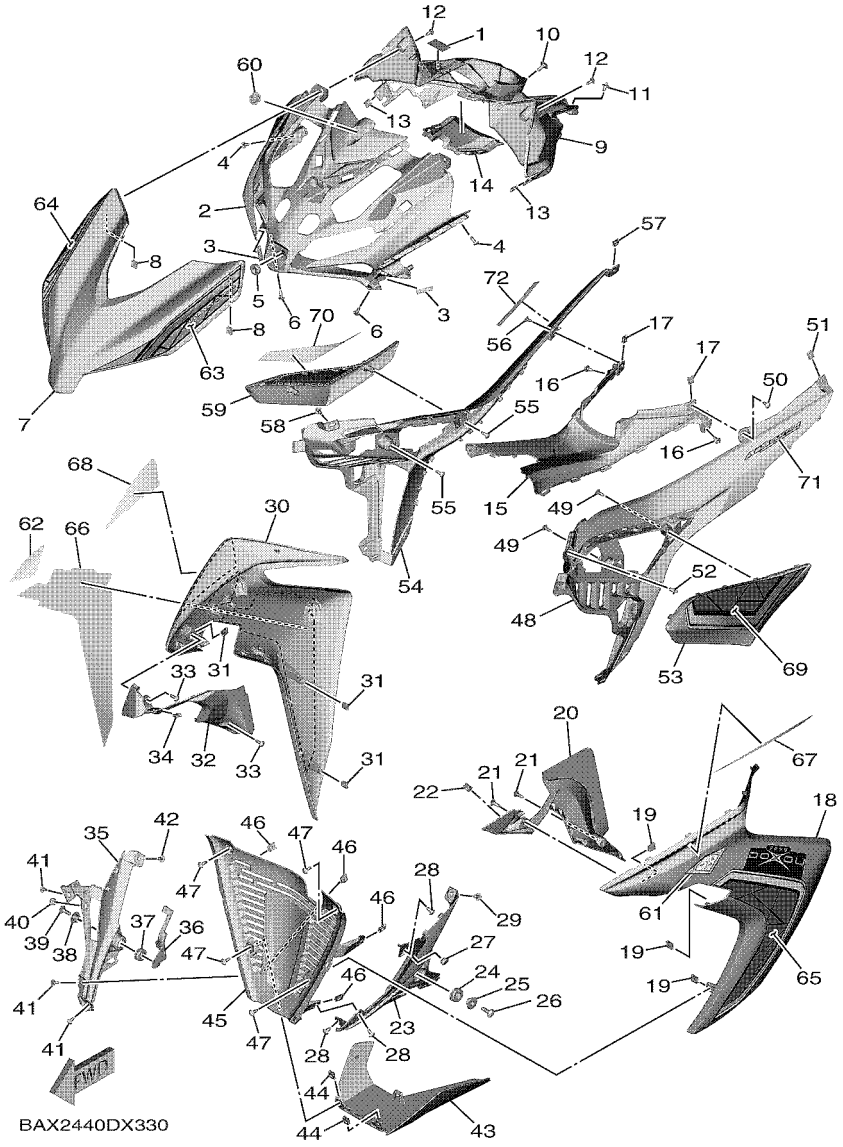


## FIG. 33 LEG SHIELD

| REF. NO. | PART NO. | DESCRIPTION | BAX2 | | | | | REMARKS |
|---|---|---|---|---|---|---|---|---|
| 1 | B17–F1568–00 | LABEL, WARNING | 1 | | | | | |
| 2 | BAX–F836K–00 | PANEL, INNER 1 | 1 | | | | | |
| 3 | B5V–F8344–00 | TAPE | 2 | | | | | |
| 4 | 97707–50016 | SCREW, TRUSS HEAD TAPPING | 2 | | | | | |
| 5 | 90480–13398 | GROMMET | 1 | | | | | |
| 6 | 90160–05009 | SCREW, ROUND TAPPING | 2 | | | | | |
| 7 | BAX–F3391–00–P3 | PANEL, FRONT | 1 | | | | | SMX FOR MBM3 |
| 8 | 90183–05807 | NUT, SPRING | 2 | | | | | |
| 9 | BAX–F836L–00 | PANEL, INNER 2 | 1 | | | | | |
| 10 | 90111–06848 | BOLT,HEX. SOCKET BUTTON | 1 | | | | | |
| 11 | 90269–06816 | RIVET | 1 | | | | | |
| 12 | 90160–05009 | SCREW, ROUND TAPPING | 2 | | | | | |
| 13 | 90183–05807 | NUT, SPRING | 2 | | | | | |
| 14 | BAX–F843J–00 | COVER 3 | 1 | | | | | |
| 15 | BAX–F8365–00 | COVER | 1 | | | | | |
| 16 | 90269–06816 | RIVET | 2 | | | | | |
| 17 | 90183–05807 | NUT, SPRING | 2 | | | | | |
| 18 | BAX–F835U–00–P3 | PANEL 1 | 1 | | | | | MBM3 |
| 19 | 90183–05807 | NUT, SPRING | 3 | | | | | |
| 20 | BAX–F137U–01 | GUIDE, AIR 1 | 1 | | | | | |
| 21 | 97707–50016 | SCREW, TRUSS HEAD TAPPING | 2 | | | | | |
| 22 | 90183–05807 | NUT, SPRING | 1 | | | | | |
| 23 | BAX–F8385–00 | COVER, LOWER | 1 | | | | | |
| 24 | 90480–18418 | GROMMET | 1 | | | | | |
| 25 | 90387–09801 | COLLAR | 1 | | | | | |
| 26 | 90111–06815 | BOLT,HEX. SOCKET BUTTON | 1 | | | | | |
| 27 | 1S8–F6199–00 | PLUG, BLIND | 1 | | | | | |

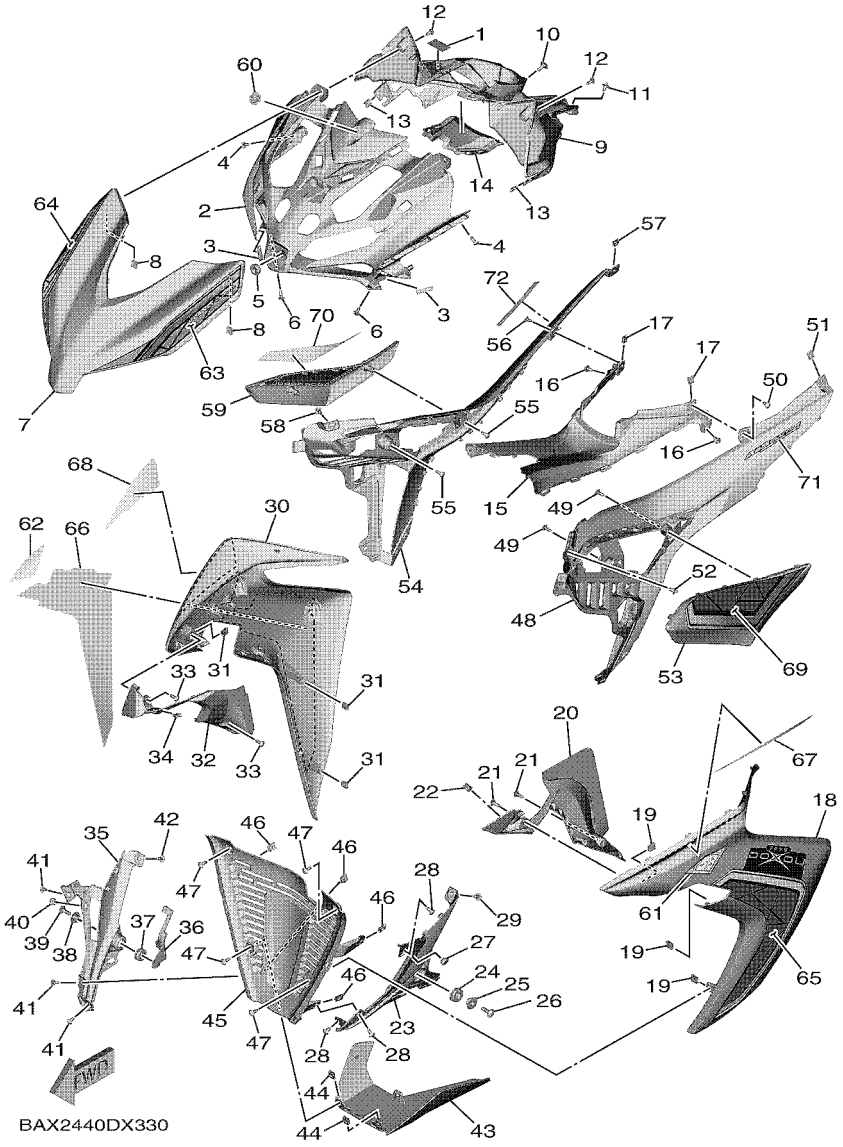


## FIG. 33 LEG SHIELD

| REF. NO. | PART NO. | DESCRIPTION | BAX2 | | | | | REMARKS |
|---|---|---|---|---|---|---|---|---|
| 28 | 97707–50012 | SCREW, TRUSS HEAD TAPPING | 3 | | | | | |
| 29 | 90269–06816 | RIVET | 1 | | | | | |
| 30 | BAX–F835V–00–P3 | PANEL 2 | 1 | | | | | MBM3 |
| 31 | 90183–05807 | NUT, SPRING | 3 | | | | | |
| 32 | BAX–F137V–01 | GUIDE, AIR 2 | 1 | | | | | |
| 33 | 97707–50016 | SCREW, TRUSS HEAD TAPPING | 2 | | | | | |
| 34 | 90183–05807 | NUT, SPRING | 1 | | | | | |
| 35 | BAX–F8395–00 | COVER, UNDER 2 | 1 | | | | | |
| 36 | BAX–F8322–00 | STAY 2 | 1 | | | | | |
| 37 | 90480–18418 | GROMMET | 1 | | | | | |
| 38 | 90387–09801 | COLLAR | 1 | | | | | |
| 39 | 90111–06815 | BOLT,HEX. SOCKET BUTTON | 1 | | | | | |
| 40 | 1S8–F6199–00 | PLUG, BLIND | 1 | | | | | |
| 41 | 97707–50012 | SCREW, TRUSS HEAD TAPPING | 3 | | | | | |
| 42 | 90269–06816 | RIVET | 1 | | | | | |
| 43 | BAX–F837D–00–P3 | COVER, UNDER 3 | 1 | | | | | MBM3 |
| 44 | 90183–05807 | NUT, SPRING | 2 | | | | | |
| 45 | BAX–F1552–01 | FENDER, INNER | 1 | | | | | |
| 46 | 90183–05807 | NUT, SPRING | 4 | | | | | |
| 47 | 90160–05009 | SCREW, ROUND TAPPING | 4 | | | | | |
| 48 | BAX–F842M–00–P3 | COVER 1 | 1 | | | | | SMX FOR MBM3 |
| 49 | 97707–50016 | SCREW, TRUSS HEAD TAPPING | 2 | | | | | |
| 50 | 90160–05009 | SCREW, ROUND TAPPING | 1 | | | | | |
| 51 | 90183–05807 | NUT, SPRING | 1 | | | | | |
| 52 | 90269–06816 | RIVET | 1 | | | | | |
| 53 | BAX–F172G–00–P3 | PANEL 3 | 1 | | | | | MBM3 |
| 54 | BAX–F842N–00–P3 | COVER 2 | 1 | | | | | SMX FOR MBM3 |

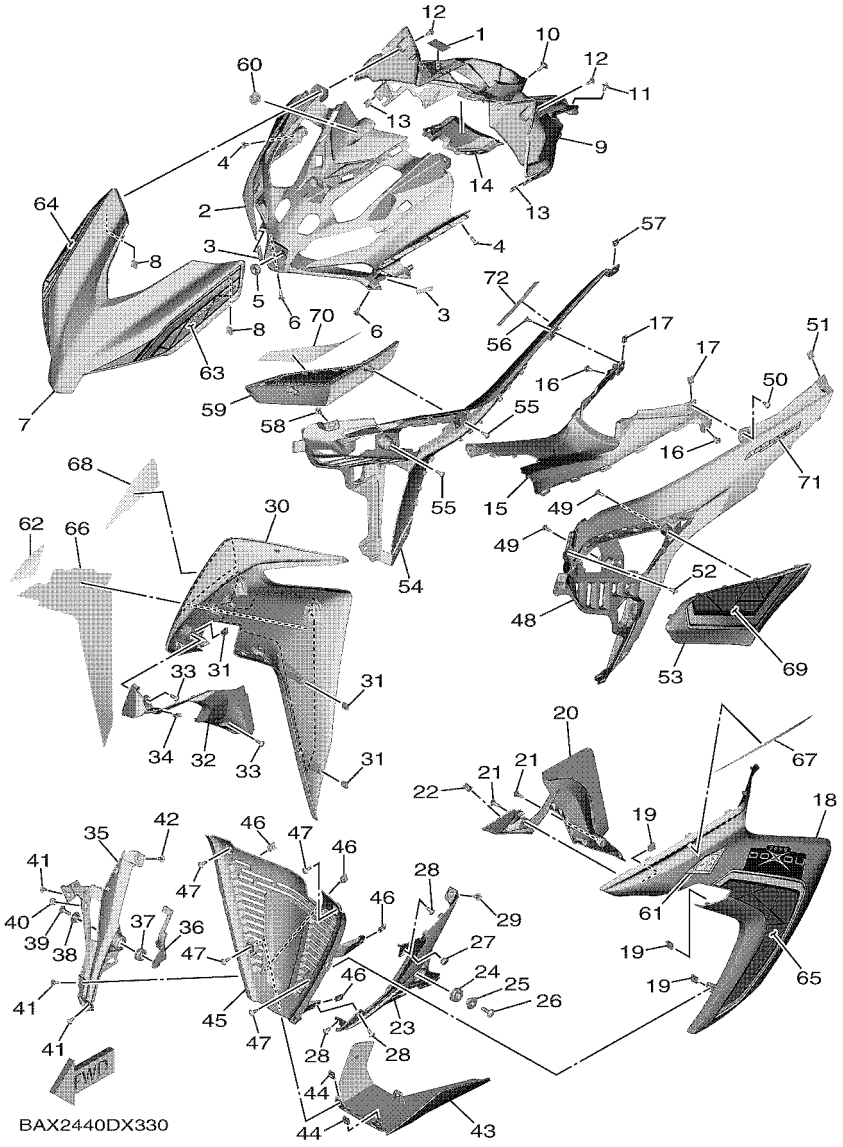


## FIG. 33 LEG SHIELD

| REF. NO. | PART NO. | DESCRIPTION | BAX2 | | | | | REMARKS |
|---|---|---|---|---|---|---|---|---|
| 55 | 97707–50016 | SCREW, TRUSS HEAD TAPPING | 2 | | | | | |
| 56 | 90160–05009 | SCREW, ROUND TAPPING | 1 | | | | | |
| 57 | 90183–05807 | NUT, SPRING | 1 | | | | | |
| 58 | 90269–06816 | RIVET | 1 | | | | | |
| 59 | BAX–F172H–00–P3 | PANEL 4 | 1 | | | | | MBM3 |
| 60 | B17–F836B–30 | TUNING FORK MARK | 1 | | | | | |
| 61 | BAX–F8328–00 | EMBLEM | 1 | | | | | |
| 62 | BAX–F8338–00 | EMBLEM | 1 | | | | | |
| 63 | BAX–F8398–30 | GRAPHIC 5 | 1 | | | | | |
| 64 | BAX–F8399–30 | GRAPHIC 6 | 1 | | | | | |
| 65 | BAX–F839A–30 | GRAPHIC 7 | 1 | | | | | |
| 66 | BAX–F839E–30 | GRAPHIC 8 | 1 | | | | | |
| 67 | BAX–F839F–30 | GRAPHIC 9 | 1 | | | | | |
| 68 | BAX–F839G–30 | GRAPHIC 10 | 1 | | | | | |
| 69 | BAX–F83GE–30 | GRAPHIC, 11 | 1 | | | | | |
| 70 | BAX–F83GF–30 | GRAPHIC, 12 | 1 | | | | | |
| 71 | BAX–F834C–30 | EMBLEM, 1 | 1 | | | | | |
| 72 | BAX–F834C–30 | EMBLEM, 1 | 1 | | | | | |

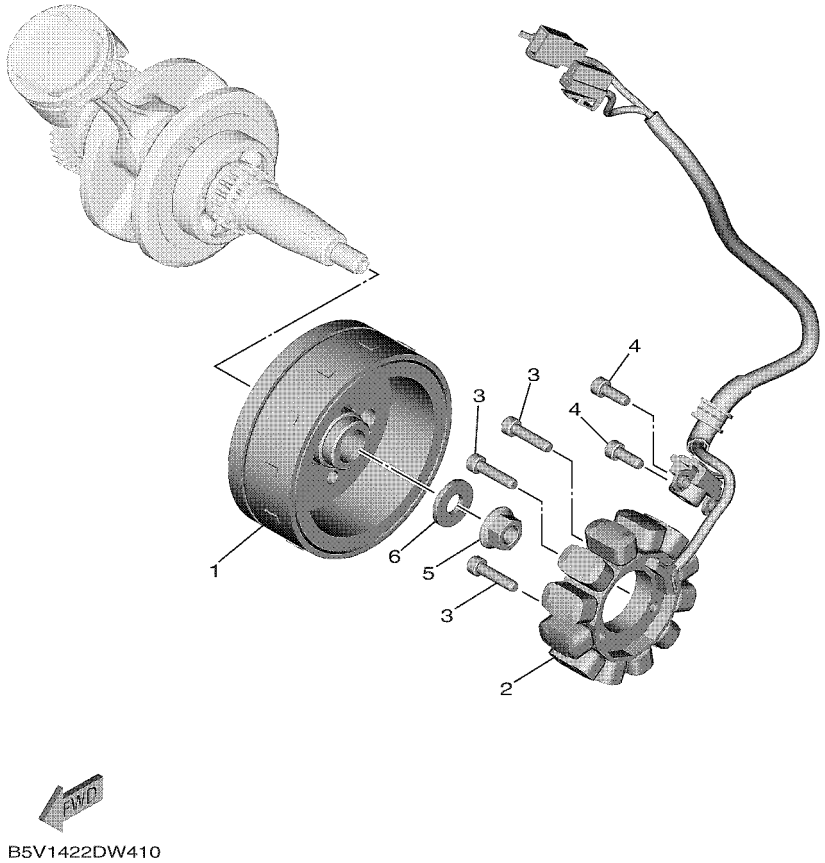


## FIG. 34 GENERATOR

| REF. NO. | PART NO. | DESCRIPTION | BAX2 | | | | | REMARKS |
|---|---|---|---|---|---|---|---|---|
| 1 | 2ND–H1450–02 | ROTOR ASSY | 1 | | | | | |
| 2 | B5V–H1410–00 | STATOR ASSY | 1 | | | | | |
| 3 | 91332–06025 | BOLT | 3 | | | | | |
| 4 | 91332–06016 | BOLT | 2 | | | | | |
| 5 | 95702–12500 | NUT, FLANGE | 1 | | | | | |
| 6 | 90201–12019 | WASHER, PLATE | 1 | | | | | |

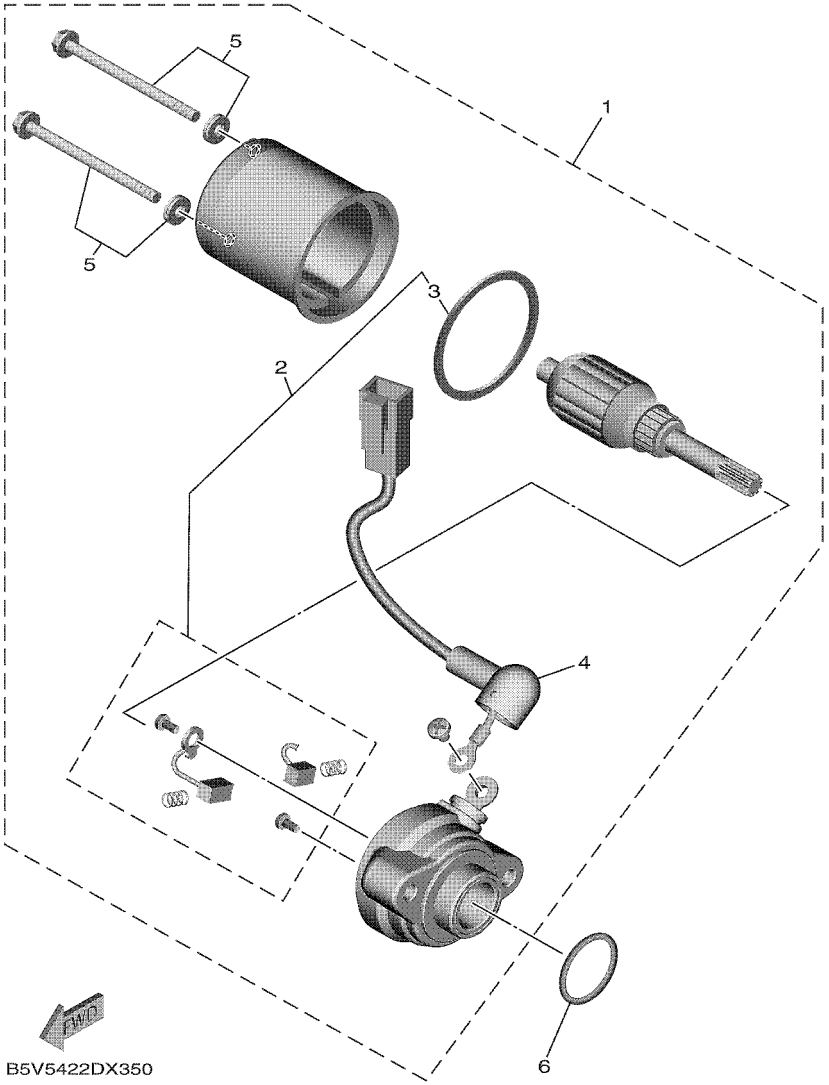


## FIG. 35 STARTING MOTOR

| REF. NO. | PART NO. | DESCRIPTION | BAX2 | | | | | REMARKS |
|---|---|---|---|---|---|---|---|---|
| 1 | 2ND–H1890–02 | MOTOR ASSY | 1 | | | | | |
| 2 | 2BM–WH18E–00 | .BRUSH REPAIR KIT. | 1 | | | | | |
| 3 | 5D9–H1861–00 | ..GASKET | 1 | | | | | |
| 4 | 1FC–H183G–00 | .CORD COMP. | 1 | | | | | |
| 5 | 5D9–H1828–00 | .SCREW SET | 1 | | | | | |
| 6 | 93210–26806 | O-RING | 1 | | | | | |

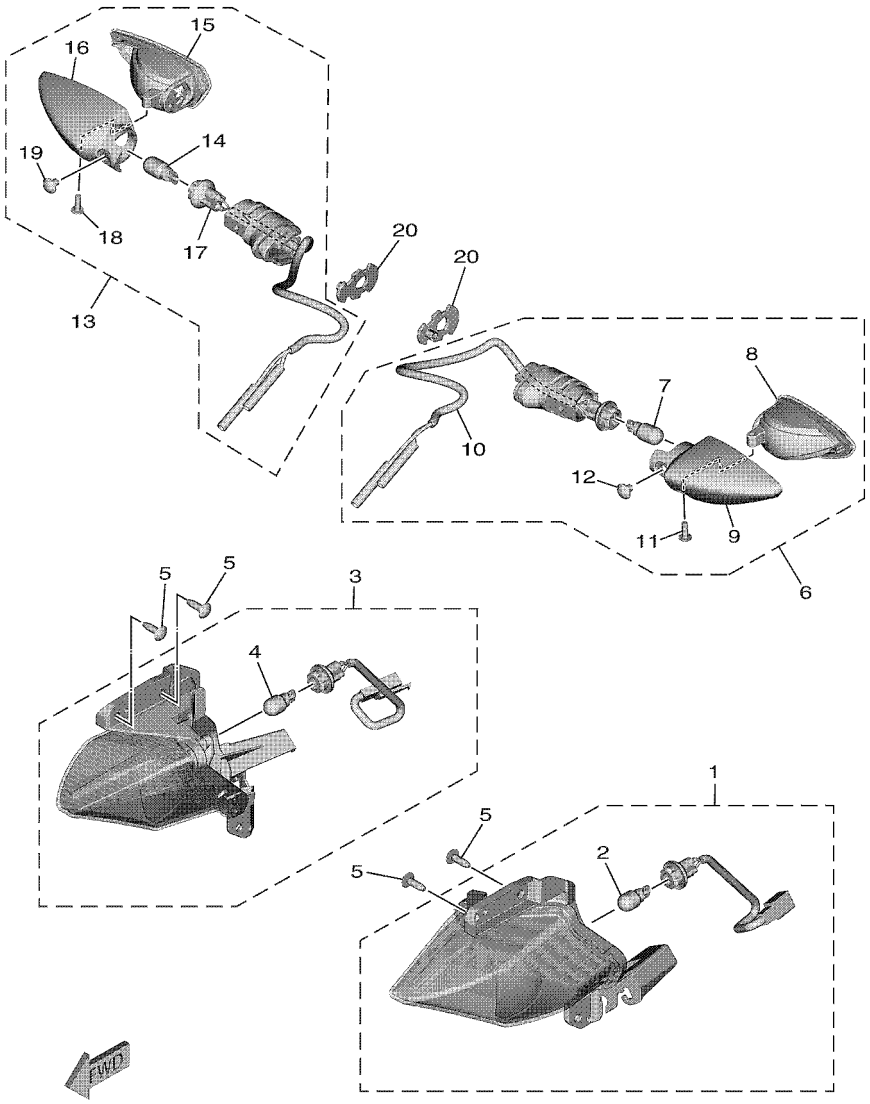


BAX1440DW360

## FIG. 36 FLASHER LIGHT

| REF. NO. | PART NO. | DESCRIPTION | BAX2 | | | | | REMARKS |
|---|---|---|---|---|---|---|---|---|
| 1 | B5V–H3310–00 | FRONT FLASHER LIGHT ASSY 1 | 1 | | | | | |
| 2 | 2CB–H3311–00 | .BULB, FLASHER (12V-10W) | 1 | | | | | |
| 3 | B5V–H3320–00 | FRONT FLASHER LIGHT ASSY 2 | 1 | | | | | |
| 4 | 2CB–H3311–00 | .BULB, FLASHER (12V-10W) | 1 | | | | | |
| 5 | 97707–50016 | SCREW, TRUSS HEAD TAPPING | 4 | | | | | |
| 6 | BAX–H3330–00 | REAR FLASHER LIGHT ASSY 1 | 1 | | | | | |
| 7 | 55D–H3311–00 | .BULB, FLASHER (12V-10W) | 1 | | | | | |
| 8 | 55D–H333A–00 | .LENS COMP 1 | 1 | | | | | |
| 9 | 55D–H3323–00 | .BODY | 1 | | | | | |
| 10 | BAX–H333E–00 | .CORD ASSY | 1 | | | | | |
| 11 | 55D–H3333–00 | .SCREW, LENS FITTING | 1 | | | | | |
| 12 | 55D–H3358–00 | .SCREW, SPECIAL | 1 | | | | | |
| 13 | BAX–H3340–00 | REAR FLASHER LIGHT ASSY 2 | 1 | | | | | |
| 14 | 55D–H3311–00 | .BULB, FLASHER (12V-10W) | 1 | | | | | |
| 15 | 55D–H334A–00 | .LENS COMP 2 | 1 | | | | | |
| 16 | 55D–H332M–00 | .BODY 2 | 1 | | | | | |
| 17 | BAX–H334E–00 | .CORD ASSY | 1 | | | | | |
| 18 | 55D–H3333–00 | .SCREW, LENS FITTING | 1 | | | | | |
| 19 | 55D–H3358–00 | .SCREW, SPECIAL | 1 | | | | | |
| 20 | 1VP–H3318–00 | STAY, FLASHER 1 | 2 | | | | | |

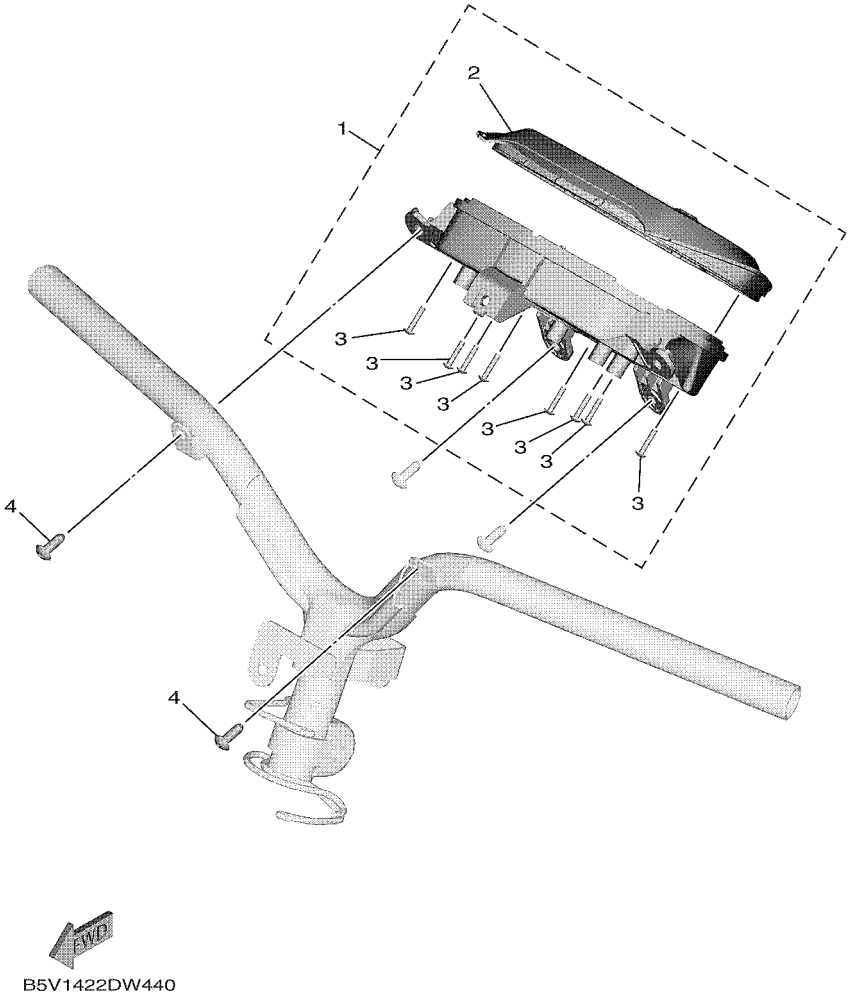


## FIG. 37 METER

| REF. NO. | PART NO. | DESCRIPTION | BAX2 | | | | | REMARKS |
|---|---|---|---|---|---|---|---|---|
| 1 | B5V–H3500–00 | METER ASSY | 1 | | | | | |
| 2 | B5V–H3571–00 | .CASE, SPEEDOMETER UPPER | 1 | | | | | |
| 3 | 97702–30016 | .SCREW,TAPPING | 8 | | | | | |
| 4 | 90160–05012 | SCREW, ROUND TAPPING | 2 | | | | | |

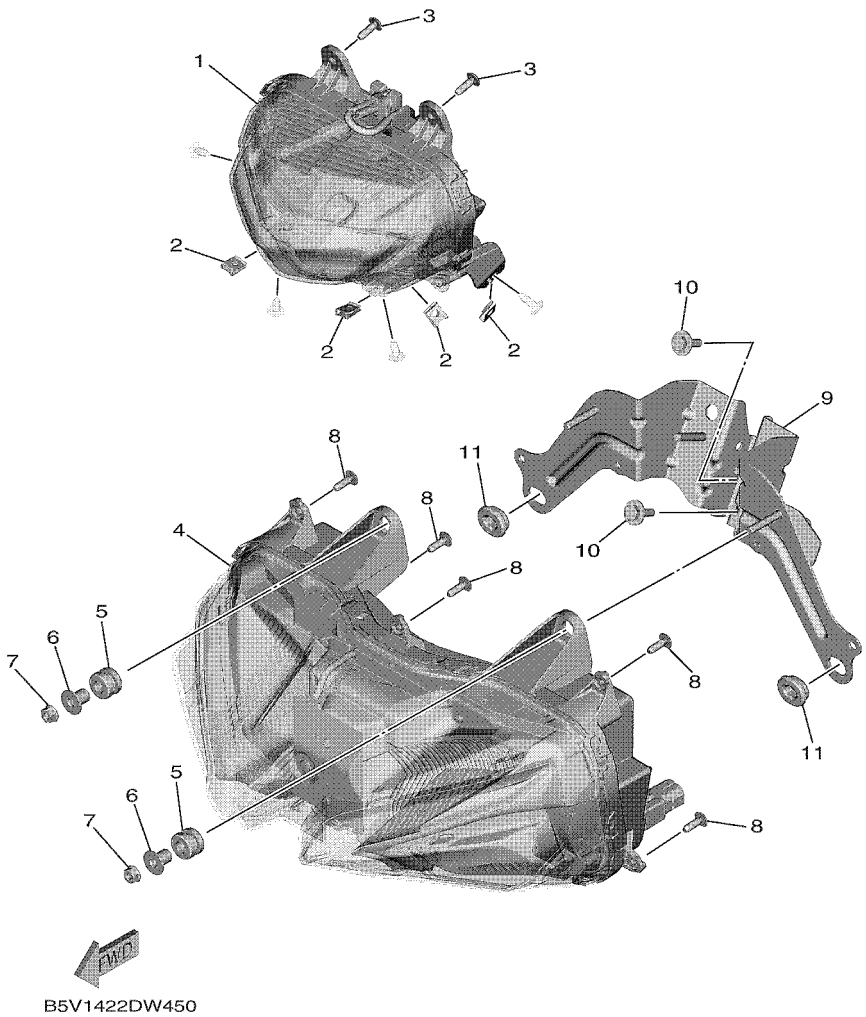


## FIG. 38 HEADLIGHT

| REF. NO. | PART NO. | DESCRIPTION | BAX2 | | | | | REMARKS |
|---|---|---|---|---|---|---|---|---|
| 1 | B5V–H4310–00 | HEADLIGHT UNIT ASSY | 1 | | | | | |
| 2 | 90183–05807 | NUT, SPRING | 4 | | | | | |
| 3 | 90160–05012 | SCREW, ROUND TAPPING | 2 | | | | | |
| 4 | B5V–H431A–00 | HEADLIGHT UNIT ASSY 2 | 1 | | | | | |
| 5 | 90480–14023 | GROMMET | 2 | | | | | |
| 6 | 90387–06158 | COLLAR | 2 | | | | | |
| 7 | 95702–06500 | NUT, FLANGE | 2 | | | | | |
| 8 | 90160–05012 | SCREW, ROUND TAPPING | 5 | | | | | |
| 9 | BAX–H4118–00 | STAY, HEADLIGHT 1 | 1 | | | | | |
| 10 | 90119–06810 | BOLT, WITH WASHER | 2 | | | | | |
| 11 | 90480–01870 | GROMMET | 2 | | | | | |

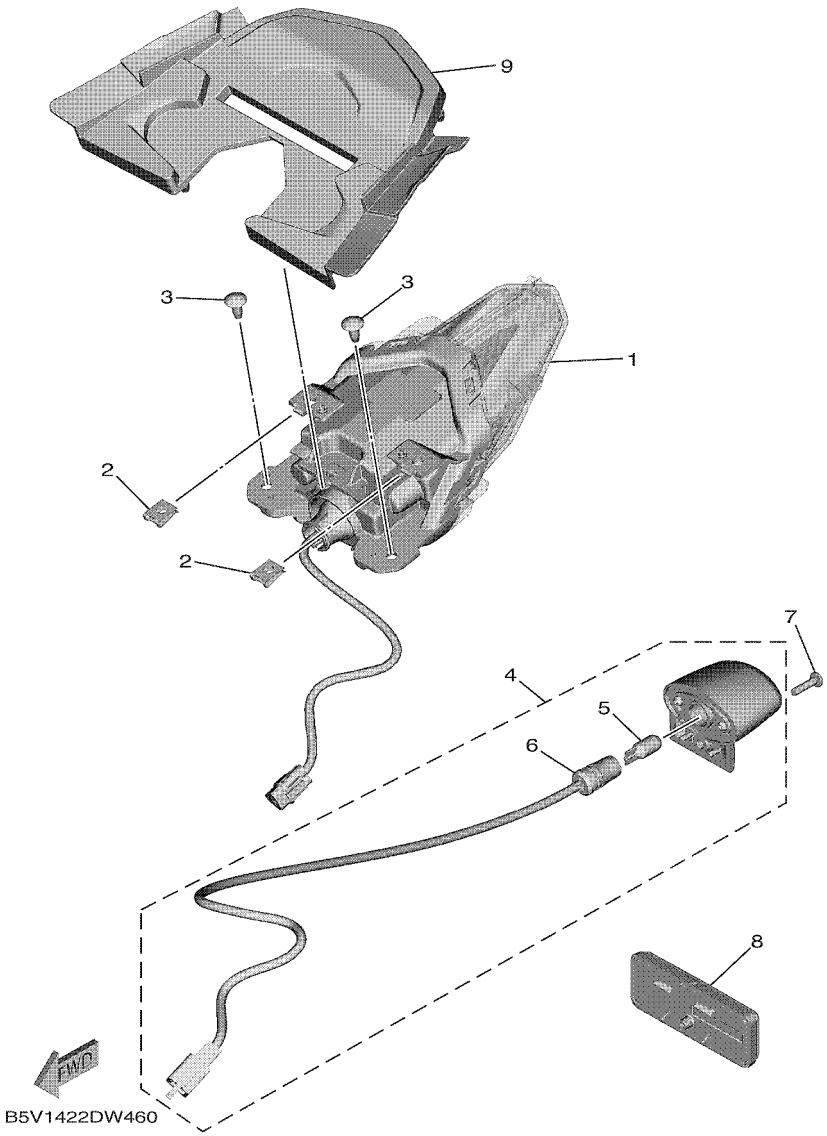


## FIG. 39 TAILLIGHT

| REF. NO. | PART NO. | DESCRIPTION | BAX2 | | | | | REMARKS |
|---|---|---|---|---|---|---|---|---|
| 1 | B5V–H4710–00 | TAILLIGHT UNIT ASSY | 1 | | | | | |
| 2 | 90183–05807 | NUT, SPRING | 2 | | | | | |
| 3 | 97707–50012 | SCREW, TRUSS HEAD TAPPING | 2 | | | | | |
| 4 | BAX–H4740–00 | LICENCE LIGHT ASSY | 1 | | | | | |
| 5 | B17–H4744–00 | .BULB (12V-5W) | 1 | | | | | |
| 6 | BXA–H4547–00 | .CORD, LICENCE LIGHT | 1 | | | | | |
| 7 | 98907–04016 | SCREW, BIND | 1 | | | | | |
| 8 | 55D–H5130–00 | REAR REFLECTOR ASSY | 1 | | | | | |
| 9 | BAX–H4516–00 | COVER, TAILLIGHT | 1 | | | | | |

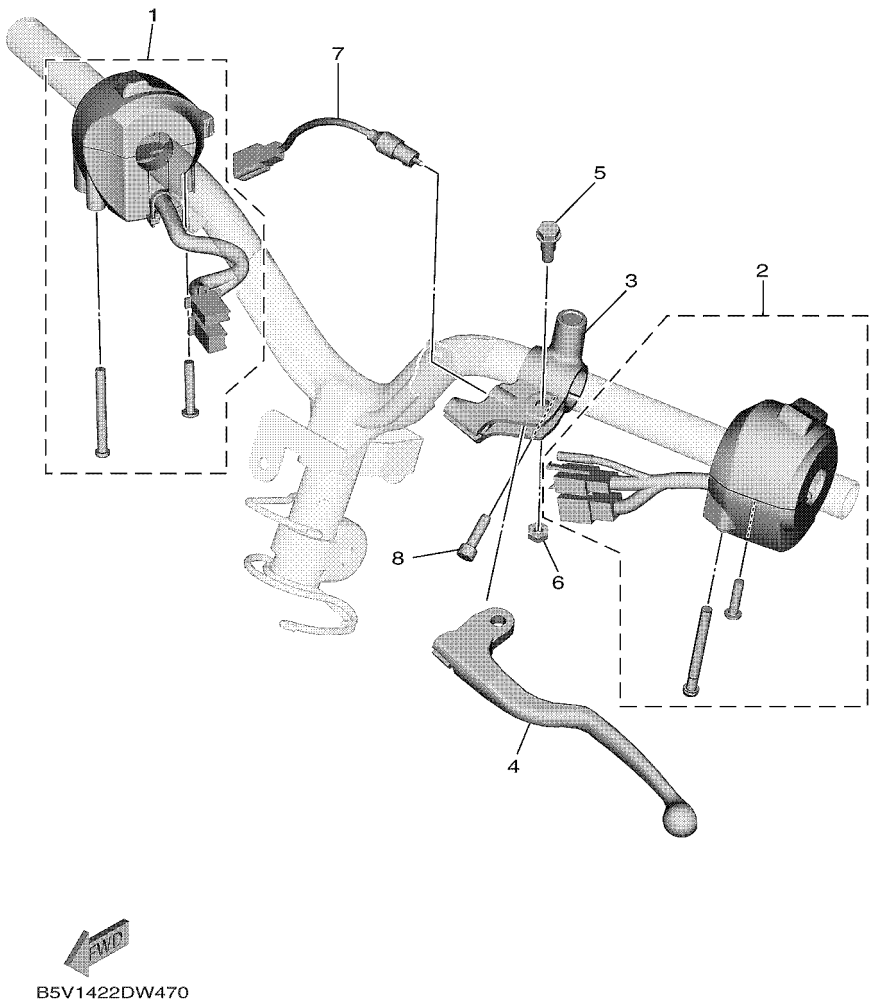


## FIG. 40 HANDLE SWITCH & LEVER

| REF. NO. | PART NO. | DESCRIPTION | BAX2 | | | | | REMARKS |
|---|---|---|---|---|---|---|---|---|
| 1 | BAW–H3963–00 | SWITCH, HANDLE 3 | 1 | | | | | |
| 2 | B5V–H3973–00 | SWITCH, HANDLE 3 | 1 | | | | | |
| 3 | 55P–H2911–00 | HOLDER, LEVER 1 | 1 | | | | | |
| 4 | B5V–H3912–00 | LEVER 1 | 1 | | | | | |
| 5 | 90109–06827 | BOLT | 1 | | | | | |
| 6 | 95607–06100 | NUT, SELF-LOCKING | 1 | | | | | |
| 7 | 55P–H2917–00 | SWITCH | 1 | | | | | |
| 8 | 91337–06020 | BOLT | 1 | | | | | |

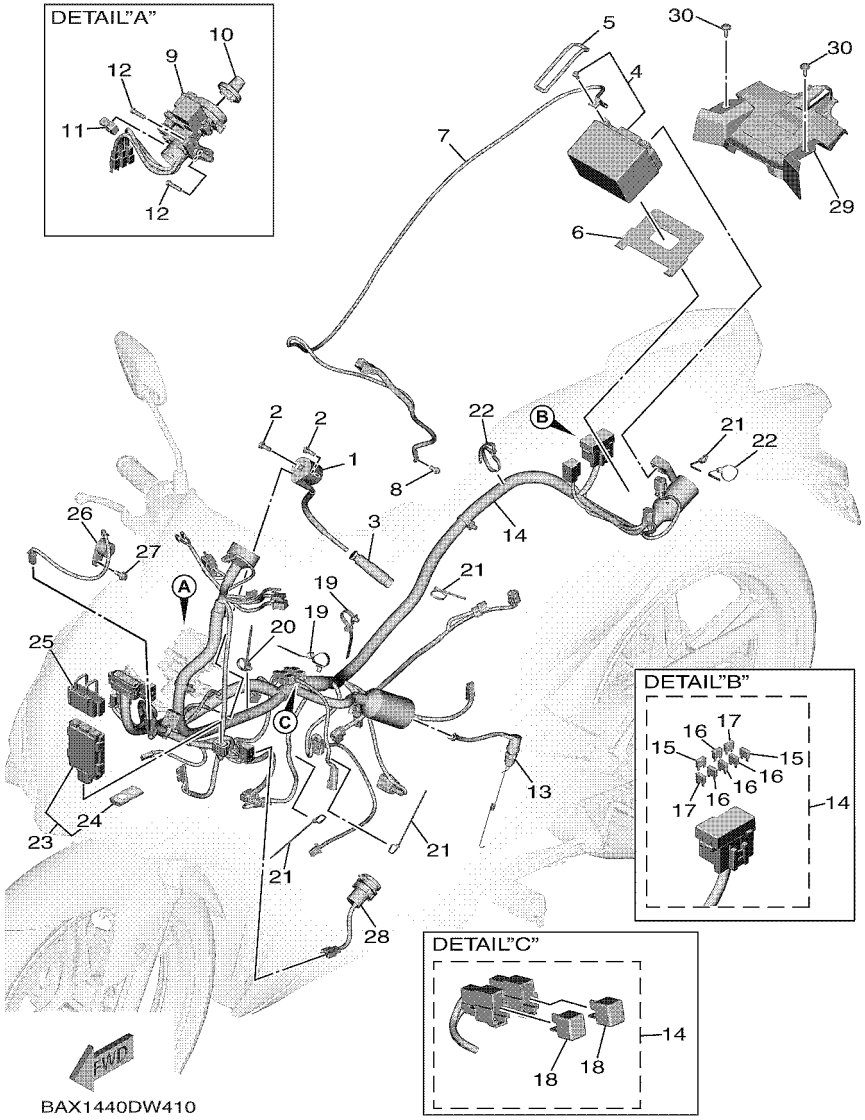


## FIG. 41 ELECTRICAL 1

| REF. NO. | PART NO. | DESCRIPTION | BAX2 | | | | | REMARKS |
|---|---|---|---|---|---|---|---|---|
| 1 | B5V–H2310–00 | IGNITION COIL ASSY | 1 | | | | | |
| 2 | 97002–06016 | BOLT, HEXAGON | 2 | | | | | |
| 3 | B0T–H2370–00 | PLUG CAP ASSY | 1 | | | | | |
| 4 | 55D–H2100–00 | BATTERY ASSY (PINACO PTZ5S) | 1 | | | | | |
| 5 | 5VW–H2131–00 | BAND, BATTERY | 1 | | | | | |
| 6 | BAX–H2121–00 | PAD, BATTERY | 1 | | | | | |
| 7 | BAX–H2116–00 | WIRE, MINUS LEAD | 1 | | | | | |
| 8 | 95022–06012 | BOLT, FLANGE | 1 | | | | | |
| 9 | BAX–H2501–00 | MAIN SWITCH STEERING LOCK | 1 | | | | | |
| 10 | B63–H276E–01 | KNOB COMP. | 1 | | | | | |
| 11 | 90464–09806 | CLAMP | 1 | | | | | |
| 12 | 90111–06162 | BOLT,HEX. SOCKET BUTTON | 2 | | | | | |
| 13 | B5V–H2530–00 | STOP SWITCH ASSY | 1 | | | | | |
| 14 | BAX–H2590–00 | WIRE HARNESS ASSY | 1 | | | | | |
| 15 | BAX–H2151–20 | .FUSE (20A) | 2 | | | | | |
| 16 | 2BR–H2151–00 | .FUSE (10A) | 4 | | | | | |
| 17 | BAX–H2151–90 | .FUSE (5A) | 2 | | | | | |
| 18 | 3WP–81980–00 | .DIODE ASSY | 2 | | | | | |
| 19 | 90464–34002 | CLAMP | 2 | | | | | |
| 20 | 90464–36007 | CLAMP | 1 | | | | | |
| 21 | 90464–36800 | CLAMP | 4 | | | | | |
| 22 | 90464–70800 | CLAMP | 2 | | | | | |
| 23 | BX9–H6260–01 | REMOTE CONTROL UNIT ASSY | 1 | | | | | |
| 24 | B2T–H6261–00 | .XMTR. COMP. | 1 | | | | | |
| 25 | B63–H5546–00 | BAND | 1 | | | | | |
| 26 | B8A–H3383–00 | BUZZER | 1 | | | | | |
| 27 | 95D32–06014 | BOLT, FLANGE DEEP RECESS | 1 | | | | | |

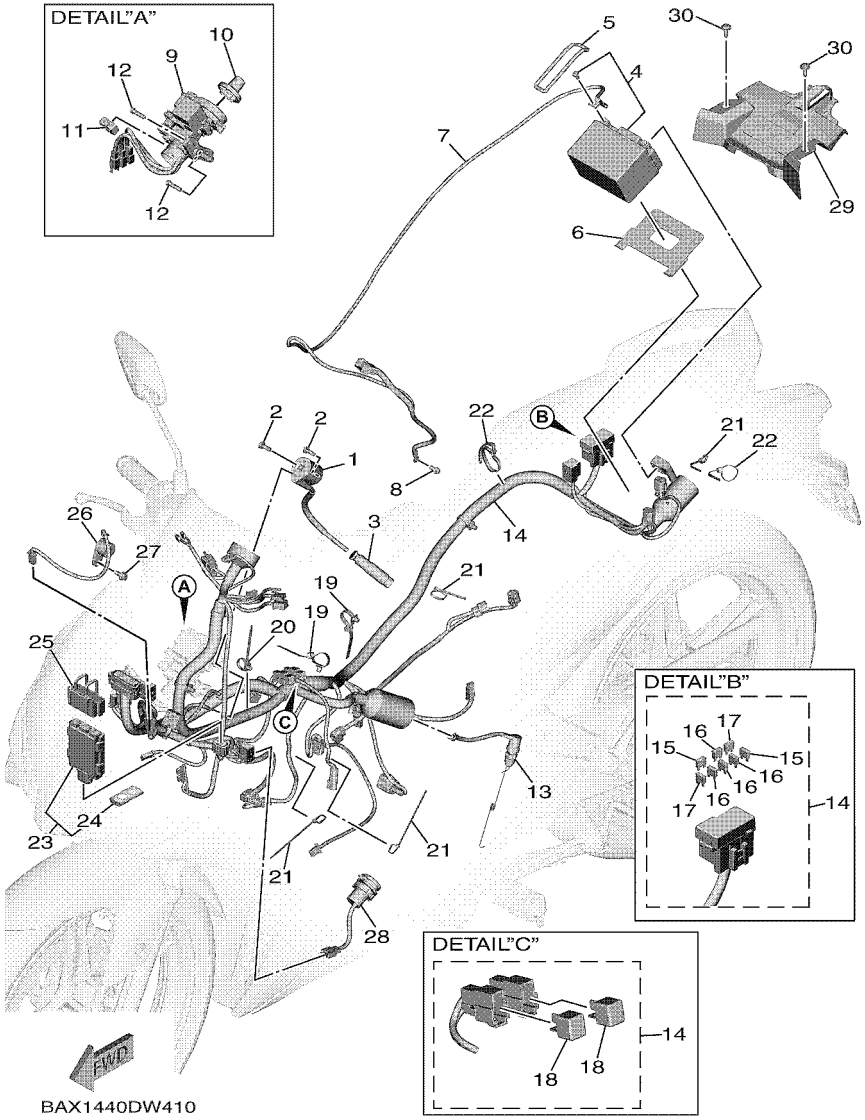


## FIG. 41 ELECTRICAL 1

| REF. NO. | PART NO. | DESCRIPTION | BAX2 | | | | | REMARKS |
|---|---|---|---|---|---|---|---|---|
| 28 | BB8–H254B–00 | TERMINAL COMP. | 1 | | | | | |
| 29 | BAX–F255V–00 | PLATE, BATTERY COVER | 1 | | | | | |
| 30 | 90159–06810 | SCREW, WITH WASHER | 2 | | | | | |

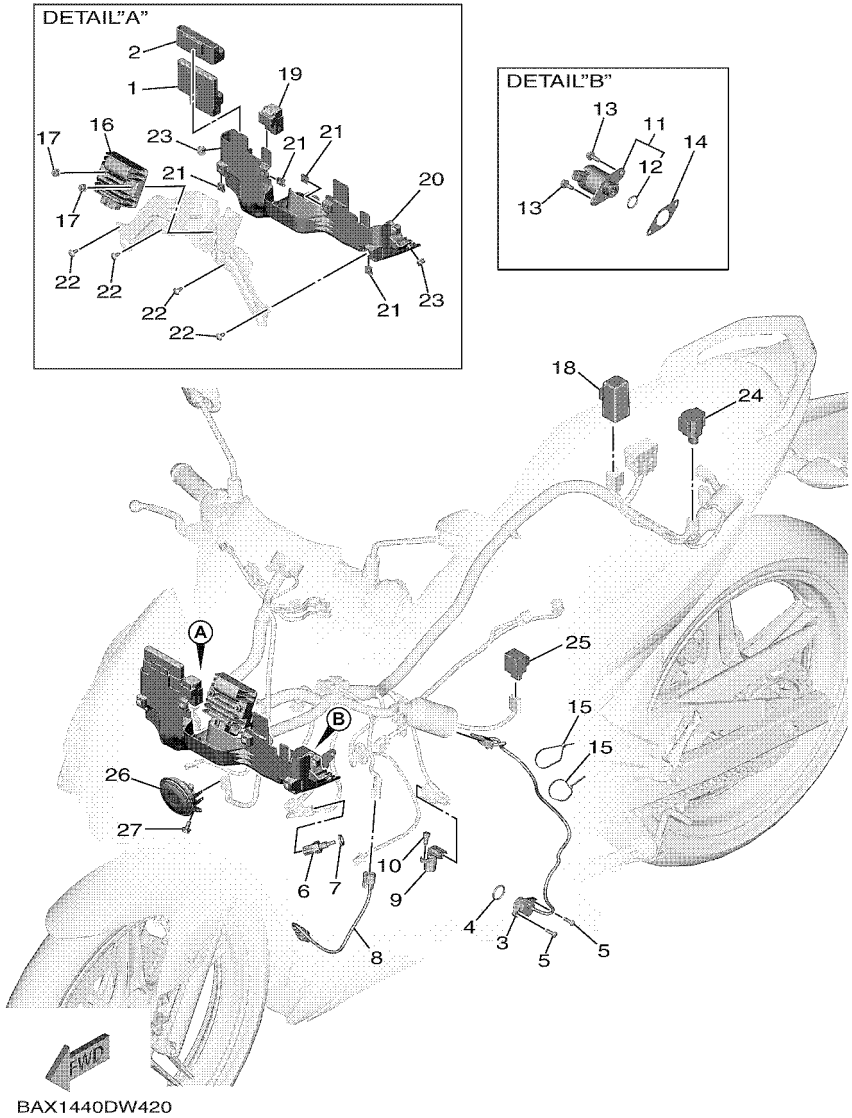


## FIG. 42 ELECTRICAL 2

| REF. NO. | PART NO. | DESCRIPTION | BAX2 | | | | | REMARKS |
|---|---|---|---|---|---|---|---|---|
| 1 | BAX–H591A–00 | ENGINE CONTROL UNIT ASSY | 1 | | | | | |
| 2 | B5V–H5546–00 | BAND | 1 | | | | | |
| 3 | B5V–H2540–00 | NEUTRAL SWITCH ASSY | 1 | | | | | |
| 4 | 93210–21802 | O-RING | 1 | | | | | |
| 5 | 98502–05016 | SCREW,PAN HEAD | 2 | | | | | |
| 6 | 52B–H3591–00 | THERMO UNIT | 1 | | | | | |
| 7 | 90430–10807 | GASKET | 1 | | | | | |
| 8 | B5V–H592A–00 | SENSOR, OXYGEN | 1 | | | | | |
| 9 | 2ND–H3755–10 | SENSOR, SPEED | 1 | | | | | |
| 10 | 91312–06014 | BOLT, HEXAGON SOCKET HEAD | 1 | | | | | |
| 11 | BK6–H6110–00 | SOLENOID | 1 | | | | | |
| 12 | BK6–H1847–00 | .O-RING | 1 | | | | | |
| 13 | 95D32–06016 | BOLT, FLANGE DEEP RECESS | 2 | | | | | |
| 14 | BAX–H1861–00 | GASKET | 1 | | | | | |
| 15 | 90464–50800 | CLAMP | 2 | | | | | |
| 16 | 2ND–H1960–10 | RECTIFIER & REGULATOR ASSY | 1 | | | | | |
| 17 | 95702–06500 | NUT, FLANGE | 2 | | | | | |
| 18 | 5TP–H1940–00 | STARTER RELAY ASSY | 1 | | | | | |
| 19 | BK6–H1950–00 | RELAY ASSY | 1 | | | | | |
| 20 | BAX–H2154–00 | CASE | 1 | | | | | |
| 21 | 90183–05807 | NUT, SPRING | 4 | | | | | |
| 22 | 97707–50012 | SCREW, TRUSS HEAD TAPPING | 4 | | | | | |
| 23 | 55C–H4759–00 | GROMMET | 2 | | | | | |
| 24 | 1PA–H2576–00 | SENSOR, LEAN ANGLE | 1 | | | | | |
| 25 | 3XV–83350–22 | FLASHER RELAY ASSY | 1 | | | | | |
| 26 | BAX–H3371–00 | HORN | 1 | | | | | |
| 27 | 95D02–06012 | BOLT, FLANGE DEEP RECESS | 1 | | | | | |

| PART NO. | REF. NO. |
|---|---|
| 52S–12439–00 | 6 – 2 |
| 50C–2536G–00 | 28 – 18 |
| 3GD–25803–00 | 28 – 7 |
| 47X–25824–01 | 26 – 8 |
| 36Y–2589H–00 | 30 – 9 |
| BAX–26031–00 | 29 – 33 |
| 5BU–27234–00 | 32 – 15 |
| 3WP–81980–00 | 41 – 18 |
| 3XV–83350–22 | 42 – 25 |
| BAX–E1102–00 | 1 – 1 |
| BAX–E111F–00 | 4 – 10 |
| B63–E1133–10 | 1 – 2 |
| B5V–E1165–00 | 1 – 8 |
| B5V–E1166–00 | 8 – 27 |
| B5V–E1169–00 | 1 – 9 |
| 2DP–E1181–00 | 1 – 20 |
| B63–E1185–01 | 5 – 4 |
| B5V–E1191–00 | 1 – 7 |
| B3F–E1193–00 | 1 – 15 |
| B5V–E1311–00 | 1 – 24 |
| B5V–E132G–00 | 1 – 13 |
| BAX–E132G–00 | 1 – 13 |
| B0T–E1351–00 | 1 – 25 |
| B5V–E1422–00 | 2 – 4 |
| BAX–E1454–00 | 2 – 18 |
| 2ND–E1496–00 | 2 – 13 |
| 2ND–E1531–10 | 2 – 19 |
| 2ND–E1536–00 | 2 – 12 |
| B5V–E1557–00 | 3 – 10 |
| B5V–E1603–00 | 2 – 11 |
| B5V–E1631–00 | 2 – 8 |
| 5YP–E1633–00 | 2 – 9 |
| B5V–E1651–00 | 2 – 3 |
| BK6–E1681–00 | 2 – 5 |
| B5V–E2111–01 | 3 – 1 |
| B63–E2113–00 | 3 – 4 |
| B63–E2117–01 | 3 – 6 |
| 5TL–E2118–00 | 3 – 5 |
| B63–E2119–00 | 3 – 3 |
| B5V–E2121–00 | 3 – 2 |
| 55P–E2126–00 | 3 – 7 |
| B5V–E2150–00 | 3 – 8 |
| B5V–E2156–00 | 3 – 14 |
| BAX–E2156–00 | 3 – 14 |
| B63–E2157–00 | 4 – 9 |
| B5V–E2160–01 | 3 – 13 |
| BAX–E2166–00 | 3 – 9 |
| B5V–E2166–10 | 3 – 9 |

| PART NO. | REF. NO. |
|---|---|
| BAX–E2170–00 | 4 – 1 |
| 2ND–E2210–20 | 4 – 17 |
| BAX–E2213–00 | 4 – 19 |
| 5MX–E2222–00 | 4 – 18 |
| BK6–E2226–00 | 3 – 11 |
| 1DR–E2228–00 | 4 – 15 |
| B63–E2231–00 | 4 – 13 |
| B5V–E2241–00 | 4 – 14 |
| BAX–E2256–00 | 4 – 16 |
| BAX–E2279–00 | 3 – 12 |
| B3M–E2280–00 | 4 – 7 |
| B6H–E2288–01 | 4 – 8 |
| B63–E22A2–00 | 6 – 11 |
| B5V–E2405–00 | 6 – 12 |
| BK6–E2410–00 | 6 – 1 |
| BT3–E2422–00 | 5 – 1 |
| 2DP–E2428–00 | 5 – 3 |
| B65–E2439–00 | 6 – 9 |
| B5V–E2443–10 | 5 – 12 |
| BAX–E244E–00 | 6 – 17 |
| 2DP–E2450–00 | 5 – 5 |
| B5V–E2461–00 | 6 – 7 |
| B65–E2462–02 | 6 – 8 |
| BAX–E2481–00 | 6 – 20 |
| BAX–E2482–00 | 6 – 21 |
| B5V–E2483–00 | 6 – 4 |
| 5YP–E2675–00 | 6 – 13 |
| B65–E2843–00 | 6 – 10 |
| 2ND–E3300–01 | 7 – 1 |
| 2ND–E3324–10 | 7 – 8 |
| 3C1–E3327–00 | 7 – 13 |
| 38B–E3411–00 | 7 – 4 |
| 38B–E3440–01 | 7 – 7 |
| 55C–E3447–00 | 7 – 9 |
| 2FB–E3556–00 | 8 – 10 |
| BAX–E3557–00 | 8 – 11 |
| BK6–E3585–00 | 8 – 1 |
| B5V–E3750–00 | 8 – 14 |
| BK6–E3761–00 | 8 – 5 |
| 2ND–E3767–10 | 8 – 13 |
| BK6–E3770–00 | 8 – 4 |
| B5V–E3907–00 | 23 – 10 |
| 54P–E3915–00 | 23 – 11 |
| 54P–E3938–00 | 8 – 8 |
| B5V–E3971–00 | 23 – 16 |
| 54P–E4137–00 | 8 – 9 |
| 54P–E4147–00 | 8 – 6 |
| 5CA–E4147–00 | 8 – 7 |

| PART NO. | REF. NO. |
|---|---|
| BAX–E4199–00 | 8 – 2 |
| B5V–E4411–00 | 8 – 16 |
| B5V–E4412–00 | 8 – 17 |
| B5V–E4417–00 | 8 – 31 |
| 5WP–E443E–00 | 8 – 22 |
| B5V–E4450–00 | 8 – 18 |
| 2ND–E4452–00 | 8 – 20 |
| B5V–E4453–00 | 8 – 19 |
| BK7–E4613–00 | 9 – 6 |
| BAX–E4703–00 | 9 – 1 |
| BAX–E4718–00 | 9 – 2 |
| B17–E4747–00 | 31 – 53 |
| BAX–E4799–10 | 9 – 4 |
| B5V–E4877–00 | 8 – 24 |
| 2ND–E5113–00 | 11 – 7 |
| BAX–E5150–00 | 10 – 1 |
| 1S8–E5351–00 | 7 – 3 |
| BAX–E5362–00 | 11 – 15 |
| BAX–E5411–00 | 11 – 1 |
| BAX–E5418–10 | 11 – 8 |
| BAX–E5421–00 | 11 – 10 |
| B5V–E5441–00 | 4 – 20 |
| BAX–E5451–00 | 11 – 2 |
| BAX–E5461–00 | 11 – 11 |
| B17–E5514–00 | 12 – 1 |
| 1S8–E5521–00 | 12 – 2 |
| 2ND–E5524–01 | 12 – 3 |
| 2PV–E5572–00 | 12 – 9 |
| 2PV–E5580–00 | 12 – 6 |
| 2PH–E5583–10 | 12 – 7 |
| 1ST–E5614–00 | 12 – 8 |
| 2ND–E6111–00 | 13 – 1 |
| 2ND–E6111–10 | 13 – 1 |
| 2ND–E6144–00 | 13 – 20 |
| B5V–E6150–00 | 13 – 5 |
| 2ND–E6154–00 | 13 – 6 |
| 55P–E6193–00 | 13 – 2 |
| 2ND–E6321–00 | 13 – 8 |
| B5V–E6321–00 | 13 – 10 |
| B5V–E6324–00 | 13 – 12 |
| B5V–E6325–00 | 13 – 11 |
| B5V–E6331–00 | 13 – 9 |
| BK6–E6333–00 | 13 – 14 |
| B5V–E6337–00 | 13 – 17 |
| 2ND–E6344–00 | 13 – 21 |
| B5V–E6345–00 | 13 – 25 |
| B5V–E6351–00 | 13 – 13 |
| B5V–E6352–00 | 13 – 16 |

| PART NO. | REF. NO. |
|---|---|
| B5V–E6356–00 | 13 – 19 |
| 2ND–E6357–00 | 13 – 26 |
| B5V–E6358–00 | 13 – 18 |
| B5V–E6371–00 | 13 – 7 |
| B5V–E6380–00 | 13 – 24 |
| B5V–E6647–00 | 13 – 4 |
| BK6–E6774–00 | 13 – 15 |
| 55P–E7211–00 | 14 – 7 |
| B5V–E7221–00 | 14 – 15 |
| B5V–E7231–00 | 14 – 13 |
| B5V–E7241–00 | 14 – 12 |
| B5V–E7251–00 | 14 – 9 |
| B5V–E7261–00 | 14 – 14 |
| B5V–E7410–00 | 14 – 1 |
| B5V–E7421–00 | 14 – 6 |
| 1S8–E7456–00 | 14 – 23 |
| 16S–E7471–00 | 14 – 4 |
| B5V–E8101–00 | 16 – 4 |
| BAX–E8110–00 | 16 – 9 |
| 5HU–E8113–00 | 16 – 10 |
| B5V–E8140–00 | 16 – 1 |
| BK7–E8185–00 | 15 – 2 |
| B5V–E8337–00 | 16 – 3 |
| 2ND–E8511–00 | 15 – 7 |
| 2ND–E8512–00 | 15 – 8 |
| 2ND–E8513–00 | 15 – 9 |
| 2ND–E8531–00 | 15 – 10 |
| B5V–E8540–00 | 15 – 1 |
| 3S4–E8542–00 | 15 – 5 |
| BAX–F1110–00 | 17 – 1 |
| B17–F113J–00 | 21 – 12 |
| B17–F113K–00 | 21 – 16 |
| BAX–F117K–00 | 18 – 12 |
| B5V–F1315–00 | 17 – 8 |
| BAX–F133F–00 | 32 – 20 |
| BAX–F137U–01 | 33 – 20 |
| BAX–F137V–01 | 33 – 32 |
| B17–F1511–10–P9 | 18 – 1 |
| B17–F1513–00 | 18 – 2 |
| B17–F1514–00 | 18 – 3 |
| BAX–F1552–01 | 33 – 45 |
| B17–F1568–00 | 33 – 1 |
| BAX–F1611–00 | 18 – 6 |
| BAX–F1629–00 | 18 – 15 |
| BAX–F164F–00 | 18 – 20 |
| B17–F1650–00 | 20 – 6 |
| B17–F1668–10 | 20 – 12 |
| BAX–F1711–00 | 19 – 1 |

| PART NO. | REF. NO. |
|---|---|
| BAX–F1717–00 | 29 – 17 |
| BAX–F171E–00 | 19 – 19 |
| BAX–F1721–00 | 19 – 6 |
| BAX–F172G–00–P3 | 33 – 53 |
| BAX–F172H–00–P3 | 33 – 59 |
| BAX–F172L–00 | 19 – 27 |
| BAX–F1731–00–P3 | 19 – 11 |
| BAX–F173E–30 | 19 – 30 |
| BAX–F173F–30 | 19 – 31 |
| BAX–F1741–00–P3 | 19 – 15 |
| BAX–F174G–30 | 19 – 32 |
| BAX–F174H–00 | 19 – 33 |
| BAX–F1816–00 | 19 – 28 |
| BAX–F1817–00 | 19 – 29 |
| B5V–F1871–00 | 19 – 24 |
| 1S9–F1875–00 | 19 – 26 |
| BAX–F2100–00 | 20 – 1 |
| 5B9–F2123–00 | 20 – 2 |
| B17–F2151–10 | 20 – 3 |
| BAX–F2167–00 | 28 – 3 |
| BAX–F2174–00 | 27 – 21 |
| B17–F2210–00 | 20 – 9 |
| BAX–F2328–00 | 18 – 19 |
| BAX–F255V–00 | 41 – 29 |
| BAX–F3102–00 | 22 – 1 |
| BAX–F3103–00 | 22 – 16 |
| BAX–F3110–00 | 22 – 5 |
| | 22 – 20 |
| BAX–F3111–00 | 22 – 13 |
| | 22 – 28 |
| B17–F3126–00 | 22 – 2 |
| BAX–F3136–00 | 22 – 17 |
| BAX–F3141–00 | 22 – 12 |
| | 22 – 27 |
| 5LL–F3144–00 | 22 – 11 |
| | 22 – 26 |
| 4UV–F3145–00 | 22 – 3 |
| | 22 – 18 |
| 2JG–F3147–00 | 22 – 14 |
| | 22 – 29 |
| 5TF–F3152–00 | 22 – 8 |
| | 22 – 23 |
| 31D–F3153–00 | 22 – 15 |
| | 22 – 30 |
| 5P0–F3156–00 | 22 – 4 |
| | 22 – 19 |
| BAX–F3157–00 | 22 – 7 |
| | 22 – 22 |

| PART NO. | REF. NO. |
|---|---|
| 509–F3158–L0 | 22 – 9 |
| | 22 – 24 |
| BAX–F3170–00 | 22 – 6 |
| | 22 – 21 |
| 31D–F3181–50 | 22 – 10 |
| | 22 – 25 |
| BAX–F3340–00 | 22 – 31 |
| 31D–F3346–00 | 22 – 33 |
| BAX–F3391–00–P3 | 33 – 7 |
| 4FP–F3411–10 | 22 – 32 |
| 4RT–F3411–10 | 21 – 4 |
| 1KL–F3412–10 | 21 – 1 |
| 4RT–F3412–10 | 21 – 3 |
| 5P1–F3416–01 | 21 – 6 |
| 1P6–F341E–10 | 21 – 5 |
| 5VL–F341E–10 | 21 – 2 |
| BAX–F4110–00 | 23 – 1 |
| 1FC–F412G–00 | 23 – 3 |
| 1DB–F414G–01 | 23 – 13 |
| BAX–F41B1–00 | 23 – 20 |
| 1FC–F4339–00 | 23 – 5 |
| BAX–F4491–00 | 23 – 14 |
| 4YY–F4610–00 | 23 – 18 |
| 4YY–F4612–00 | 23 – 19 |
| B5V–F465E–00 | 18 – 11 |
| BAX–F470F–30 | 24 – 2 |
| BAX–F471A–00 | 24 – 7 |
| 2WB–F4727–00 | 24 – 8 |
| BAX–F4730–30 | 24 – 1 |
| BAX–F4741–00 | 24 – 4 |
| 1VP–F4741–10 | 24 – 3 |
| BAX–F4741–10 | 24 – 5 |
| 55C–F4742–00 | 32 – 16 |
| BAX–F4747–00 | 24 – 6 |
| BAX–F4773–00–P3 | 24 – 13 |
| B5V–F4780–00 | 24 – 9 |
| BAX–F478E–00 | 24 – 11 |
| BAX–F478X–00 | 17 – 2 |
| B5V–F479D–00 | 24 – 12 |
| BAX–F482H–00 | 18 – 23 |
| B17–F5168–10–P3 | 25 – 1 |
| B6A–F5181–00 | 25 – 8 |
| B17–F5317–00 | 27 – 2 |
| B17–F5338–10–P4 | 27 – 1 |
| B17–F5364–00 | 27 – 4 |
| B17–F5366–00 | 27 – 6 |
| B17–F5377–00 | 27 – 7 |
| 4NP–F5381–00 | 20 – 4 |

| PART NO. | REF. NO. |
|---|---|
| B5V–F5381–00 | 27 – 16 |
| B17–F5383–00 | 27 – 23 |
| BAX–F5388–00 | 27 – 20 |
| BAX–F5446–00 | 27 – 10 |
| BAX–F5689–00 | 27 – 13 |
| 3C1–F5802–00 | 26 – 4 |
| 50C–F5802–00 | 28 – 6 |
| 3C1–F5803–50 | 26 – 5 |
| B5V–F5805–00 | 26 – 15 |
| 1PA–F5806–00 | 28 – 11 |
| 2ND–F5808–00 | 32 – 2 |
| 5P0–F580A–00 | 30 – 6 |
| 2ND–F580E–00 | 32 – 1 |
| BAX–F580U–00 | 26 – 3 |
| 2PV–F580W–00 | 28 – 5 |
| 2NL–F5825–00 | 26 – 9 |
| 50C–F5827–00 | 28 – 12 |
| 50C–F5828–00 | 28 – 13 |
| 50C–F582A–50 | 32 – 5 |
| B5V–F582U–01 | 26 – 1 |
| B17–F582W–00 | 28 – 1 |
| B5V–F583T–00 | 30 – 4 |
| 2ND–F5852–00 | 30 – 8 |
| 50C–F5852–00 | 32 – 9 |
| 2ND–F5854–00 | 30 – 7 |
| 2VN–F5854–00 | 32 – 11 |
| 2ND–F5855–00 | 30 – 11 |
| 50C–F5855–00 | 32 – 10 |
| 50C–F5866–00 | 32 – 6 |
| 5TL–F5867–11 | 30 – 12 |
| 2ND–F5870–00 | 30 – 5 |
| B5V–F5872–00 | 30 – 1 |
| B5V–F5873–00 | 32 – 26 |
| B17–F5876–00 | 21 – 10 |
| B5V–F587A–00 | 21 – 8 |
| BAX–F5888–00 | 32 – 18 |
| 3RW–F5889–00 | 30 – 10 |
| 50C–F5894–11 | 32 – 8 |
| 4S3–F5895–00 | 32 – 13 |
| 50C–F589A–00 | 32 – 14 |
| 50C–F5914–00 | 28 – 10 |
| 50C–F5916–00 | 28 – 20 |
| 50C–F5917–00 | 28 – 15 |
| 5YP–F5917–00 | 26 – 6 |
| 50C–F5919–00 | 28 – 8 |
| 5P0–F5919–01 | 26 – 10 |
| 1DB–F5921–01 | 26 – 13 |
| 1PA–F5921–01 | 28 – 16 |

| PART NO. | REF. NO. |
|---|---|
| 5YP–F5924–00 | 26 – 11 |
| 5YP–F5925–01 | 26 – 12 |
| 50C–F5933–00 | 28 – 19 |
| 50C–F5937–00 | 28 – 14 |
| 5YP–F5937–00 | 26 – 7 |
| 5YP–F5939–00 | 26 – 14 |
| 50C–F5961–00 | 28 – 17 |
| BAX–F6110–00 | 29 – 1 |
| BAX–F6143–00 | 29 – 5 |
| BAX–F6145–00 | 29 – 10 |
| 1S8–F6199–00 | 29 – 14 |
| | 33 – 27 |
| | 33 – 40 |
| BAX–F61AA–00–P3 | 29 – 16 |
| 1S8–F622F–00 | 29 – 28 |
| BAX–F622H–00 | 29 – 27 |
| B17–F6240–02 | 29 – 19 |
| 1VP–F6241–00 | 29 – 20 |
| BAX–F6246–00 | 29 – 25 |
| 16S–F6257–00 | 29 – 26 |
| 55C–F6259–00 | 32 – 17 |
| B17–F6280–10 | 29 – 21 |
| B17–F6290–10 | 29 – 22 |
| BAX–F6301–00 | 29 – 23 |
| BAX–F6335–00 | 29 – 30 |
| B17–F7111–10 | 31 – 1 |
| 5YP–F7112–00 | 31 – 3 |
| 31D–F7114–00 | 31 – 2 |
| BAX–F7211–00 | 31 – 9 |
| 50C–F7222–00 | 32 – 4 |
| BAX–F7311–00 | 31 – 12 |
| BAX–F7411–00 | 31 – 17 |
| B17–F7413–00 | 31 – 20 |
| | 31 – 27 |
| B5V–F741E–00 | 31 – 21 |
| | 31 – 28 |
| B17–F7430–00–P0 | 31 – 33 |
| 3C1–F7431–01 | 31 – 35 |
| B17–F7437–00 | 31 – 40 |
| | 31 – 50 |
| B17–F7440–00–P0 | 31 – 43 |
| 3C1–F7441–01 | 31 – 45 |
| BAX–F7451–00 | 31 – 19 |
| B17–F7452–00–P0 | 31 – 34 |
| BAX–F7461–00 | 31 – 26 |
| B17–F7462–00–P0 | 31 – 44 |
| BAX–F8100–00 | 24 – 15 |
| 55C–F815P–00 | 8 – 33 |

| PART NO. | REF. NO. |
|---|---|
| BAX–F8322–00 | 33 – 36 |
| BAX–F8328–00 | 33 – 61 |
| BAX–F8338–00 | 33 – 62 |
| B5V–F8344–00 | 33 – 3 |
| BAX–F834C–30 | 33 – 71 |
| | 33 – 72 |
| BAX–F835U–00–P3 | 33 – 18 |
| BAX–F835V–00–P3 | 33 – 30 |
| BAX–F8365–00 | 33 – 15 |
| B17–F836B–30 | 33 – 60 |
| BAX–F836K–00 | 33 – 2 |
| BAX–F836L–00 | 33 – 9 |
| 1S8–F8372–00 | 23 – 8 |
| BAX–F837D–00–P3 | 33 – 43 |
| BAX–F8385–00 | 33 – 23 |
| BAX–F8395–00 | 33 – 35 |
| BAX–F8398–30 | 33 – 63 |
| BAX–F8399–30 | 33 – 64 |
| BAX–F839A–30 | 33 – 65 |
| BAX–F839E–30 | 33 – 66 |
| BAX–F839F–30 | 33 – 67 |
| BAX–F839G–30 | 33 – 68 |
| BAX–F83GE–30 | 33 – 69 |
| BAX–F83GF–30 | 33 – 70 |
| BAX–F842M–00–P3 | 33 – 48 |
| BAX–F842N–00–P3 | 33 – 54 |
| BAX–F843J–00 | 33 – 14 |
| B5V–H1410–00 | 34 – 2 |
| 2ND–H1450–02 | 34 – 1 |
| 5D9–H1828–00 | 35 – 5 |
| 1FC–H183G–00 | 35 – 4 |
| BK6–H1847–00 | 42 – 12 |
| 5D9–H1861–00 | 35 – 3 |
| BAX–H1861–00 | 42 – 14 |
| 2ND–H1890–02 | 35 – 1 |
| 5TP–H1940–00 | 42 – 18 |
| BK6–H1950–00 | 42 – 19 |
| 2ND–H1960–10 | 42 – 16 |
| 55D–H2100–00 | 41 – 4 |
| BAX–H2116–00 | 41 – 7 |
| BAX–H2121–00 | 41 – 6 |
| 5VW–H2131–00 | 41 – 5 |
| 2BR–H2151–00 | 41 – 16 |
| BAX–H2151–20 | 41 – 15 |
| BAX–H2151–90 | 41 – 17 |
| BAX–H2154–00 | 42 – 20 |
| B5V–H2310–00 | 41 – 1 |
| B0T–H2370–00 | 41 – 3 |

| PART NO. | REF. NO. |
|---|---|
| BAX–H2501–00 | 41 – 9 |
| B5V–H2530–00 | 41 – 13 |
| B5V–H2540–00 | 42 – 3 |
| BB8–H254B–00 | 41 – 28 |
| 1PA–H2576–00 | 42 – 24 |
| BAX–H2590–00 | 41 – 14 |
| B63–H276E–01 | 41 – 10 |
| 55P–H2911–00 | 40 – 3 |
| 55P–H2917–00 | 40 – 7 |
| B5V–H3310–00 | 36 – 1 |
| 2CB–H3311–00 | 36 – 2 |
| | 36 – 4 |
| 55D–H3311–00 | 36 – 7 |
| | 36 – 14 |
| 1VP–H3318–00 | 36 – 20 |
| B5V–H3320–00 | 36 – 3 |
| 55D–H3323–00 | 36 – 9 |
| 55D–H332M–00 | 36 – 16 |
| BAX–H3330–00 | 36 – 6 |
| 55D–H3333–00 | 36 – 11 |
| | 36 – 18 |
| 55D–H333A–00 | 36 – 8 |
| BAX–H333E–00 | 36 – 10 |
| BAX–H3340–00 | 36 – 13 |
| 55D–H334A–00 | 36 – 15 |
| BAX–H334E–00 | 36 – 17 |
| 55D–H3358–00 | 36 – 12 |
| | 36 – 19 |
| BAX–H3371–00 | 42 – 26 |
| B8A–H3383–00 | 41 – 26 |
| B5V–H3500–00 | 37 – 1 |
| B5V–H3571–00 | 37 – 2 |
| 52B–H3591–00 | 42 – 6 |
| 2ND–H3755–10 | 42 – 9 |
| B5V–H3912–00 | 40 – 4 |
| 2ND–H3922–00 | 30 – 13 |
| BAW–H3963–00 | 40 – 1 |
| B5V–H3973–00 | 40 – 2 |
| B6H–H3980–00 | 30 – 16 |
| BAX–H4118–00 | 38 – 9 |
| B5V–H4310–00 | 38 – 1 |
| B5V–H431A–00 | 38 – 4 |
| BAX–H4516–00 | 39 – 9 |
| BXA–H4547–00 | 39 – 6 |
| B5V–H4710–00 | 39 – 1 |
| BAX–H4740–00 | 39 – 4 |
| B17–H4744–00 | 39 – 5 |
| 55C–H4759–00 | 42 – 23 |

| PART NO. | REF. NO. |
|---|---|
| 2FC–H5111–00 | 21 – 13 |
| | 21 – 17 |
| 55D–H5130–00 | 39 – 8 |
| B5V–H5546–00 | 42 – 2 |
| B63–H5546–00 | 41 – 25 |
| B5V–H5752–00 | 23 – 12 |
| BAX–H591A–00 | 42 – 1 |
| B5V–H592A–00 | 42 – 8 |
| BK6–H6110–00 | 42 – 11 |
| BX9–H6260–01 | 41 – 23 |
| B2T–H6261–00 | 41 – 24 |
| 50C–W0048–00 | 28 – 9 |
| B5V–WE140–00 | 2 – 1 |
| 2BM–WH18E–00 | 35 – 2 |
| 90101–08829 | 31 – 13 |
| 90105–088H9 | 1 – 17 |
| 90105–088J0 | 1 – 16 |
| 90105–10896 | 29 – 2 |
| 90105–108A6 | 26 – 16 |
| 90105–108B4 | 17 – 6 |
| 90105–108B8 | 20 – 10 |
| 90109–06202 | 8 – 26 |
| | 18 – 7 |
| | 19 – 2 |
| | 19 – 7 |
| 90109–06279 | 16 – 2 |
| 90109–06577 | 30 – 15 |
| 90109–06827 | 40 – 5 |
| 90109–068A4 | 18 – 4 |
| 90109–068B4 | 19 – 25 |
| 90109–08087 | 26 – 2 |
| | 28 – 2 |
| 90110–06846 | 8 – 15 |
| 90110–06873 | 12 – 10 |
| 90110–06894 | 1 – 23 |
| 90111–05049 | 29 – 15 |
| 90111–05808 | 7 – 2 |
| 90111–05817 | 29 – 18 |
| 90111–06162 | 41 – 12 |
| 90111–06807 | 9 – 3 |
| | 9 – 5 |
| 90111–06815 | 33 – 26 |
| | 33 – 39 |
| 90111–06848 | 33 – 10 |
| 90116–08826 | 27 – 11 |
| 90119–06155 | 20 – 7 |
| 90119–06810 | 38 – 10 |
| 90123–08046 | 29 – 31 |

| PART NO. | REF. NO. |
|---|---|
| 90149–05801 | 1 – 10 |
| 90151–06818 | 15 – 4 |
| 90159–06810 | 41 – 30 |
| 90160–05009 | 19 – 3 |
| | 19 – 8 |
| | 19 – 13 |
| | 19 – 17 |
| | 19 – 23 |
| | 29 – 11 |
| | 33 – 6 |
| | 33 – 12 |
| | 33 – 47 |
| | 33 – 50 |
| | 33 – 56 |
| 90160–05012 | 8 – 32 |
| | 29 – 4 |
| | 37 – 4 |
| | 38 – 3 |
| | 38 – 8 |
| 90160–05018 | 18 – 18 |
| 90163–05803 | 8 – 21 |
| 90170–08401 | 29 – 32 |
| 90170–10012 | 2 – 25 |
| 90170–14801 | 13 – 23 |
| 90179–10805 | 17 – 7 |
| 90179–25002 | 21 – 7 |
| 90183–05061 | 29 – 8 |
| 90183–05807 | 18 – 9 |
| | 19 – 12 |
| | 19 – 16 |
| | 19 – 21 |
| | 29 – 12 |
| | 33 – 8 |
| | 33 – 13 |
| | 33 – 17 |
| | 33 – 19 |
| | 33 – 22 |
| | 33 – 31 |
| | 33 – 34 |
| | 33 – 44 |
| | 33 – 46 |
| | 33 – 51 |
| | 33 – 57 |
| | 38 – 2 |
| | 39 – 2 |
| | 42 – 21 |
| 90183–06800 | 18 – 14 |
| | 18 – 16 |

| PART NO. | REF. NO. |
|---|---|
| 90185–05803 | 21 – 14 |
| | 21 – 18 |
| 90185–10011 | 29 – 3 |
| 90201–06880 | 6 – 16 |
| 90201–08043 | 31 – 42 |
| | 31 – 52 |
| 90201–08066 | 32 – 24 |
| 90201–08612 | 9 – 8 |
| 90201–08859 | 1 – 18 |
| 90201–10118 | 30 – 3 |
| | 32 – 28 |
| 90201–12019 | 13 – 3 |
| | 34 – 6 |
| 90201–14811 | 31 – 7 |
| 90201–15030 | 27 – 18 |
| 90201–15821 | 2 – 14 |
| 90201–173F4 | 14 – 18 |
| 90201–22793 | 14 – 16 |
| 90201–25290 | 12 – 5 |
| 90208–20003 | 13 – 31 |
| 90209–18208 | 14 – 10 |
| 90214–10800 | 2 – 15 |
| 90215–10803 | 2 – 24 |
| 90215–14802 | 13 – 22 |
| 90240–08005 | 32 – 23 |
| 90269–06816 | 19 – 14 |
| | 19 – 18 |
| | 29 – 6 |
| | 29 – 13 |
| | 33 – 11 |
| | 33 – 16 |
| | 33 – 29 |
| | 33 – 42 |
| | 33 – 52 |
| | 33 – 58 |
| 90280–03017 | 2 – 7 |
| 90282–05031 | 2 – 23 |
| 90340–12813 | 1 – 3 |
| 90340–14824 | 11 – 5 |
| 90387–06144 | 6 – 19 |
| 90387–06158 | 38 – 6 |
| 90387–08812 | 31 – 54 |
| 90387–08820 | 31 – 15 |
| 90387–08850 | 18 – 21 |
| 90387–09801 | 33 – 25 |
| | 33 – 38 |
| 90387–10277 | 25 – 7 |
| 90387–15810 | 2 – 20 |

| PART NO. | REF. NO. |
|---|---|
| 90387–15830 | 27 – 19 |
| 90387–17804 | 14 – 8 |
| 90401–10812 | 30 – 2 |
| | 32 – 27 |
| 90430–06803 | 1 – 5 |
| | 1 – 27 |
| | 5 – 9 |
| 90430–10807 | 42 – 7 |
| 90445–22800 | 31 – 6 |
| 90446–15386 | 31 – 11 |
| 90450–43805 | 8 – 30 |
| 90464–09806 | 41 – 11 |
| 90464–10008 | 23 – 17 |
| 90464–16012 | 20 – 8 |
| 90464–34002 | 41 – 19 |
| 90464–36007 | 41 – 20 |
| 90464–36800 | 41 – 21 |
| 90464–50800 | 42 – 15 |
| 90464–70800 | 41 – 22 |
| 90467–11019 | 8 – 23 |
| 90467–11825 | 8 – 28 |
| 90467–12052 | 8 – 29 |
| 90467–12085 | 32 – 12 |
| 90467–19803 | 6 – 5 |
| | 6 – 22 |
| 90467–20806 | 6 – 6 |
| 90467–22802 | 8 – 25 |
| 90480–01803 | 6 – 15 |
| 90480–01821 | 19 – 5 |
| | 19 – 10 |
| 90480–01870 | 38 – 11 |
| 90480–13398 | 33 – 5 |
| 90480–14023 | 38 – 5 |
| 90480–15808 | 6 – 14 |
| 90480–18418 | 33 – 24 |
| | 33 – 37 |
| 90501–06022 | 15 – 6 |
| 90501–06800 | 15 – 11 |
| 90501–12743 | 31 – 37 |
| | 31 – 47 |
| 90501–16800 | 2 – 16 |
| 90501–18576 | 7 – 5 |
| 90506–20041 | 31 – 10 |
| 90506–26814 | 31 – 16 |
| 90506–35806 | 31 – 5 |
| 90508–183B9 | 31 – 23 |
| | 31 – 30 |
| 90508–32837 | 16 – 5 |

| PART NO. | REF. NO. |
|---|---|
| 90520–02014 | 29 – 7 |
| 90520–02859 | 23 – 9 |
| 90520–05028 | 23 – 6 |
| 90520–08007 | 23 – 7 |
| 90520–15012 | 19 – 20 |
| 90520–15013 | 18 – 10 |
| 90560–07007 | 23 – 4 |
| 90560–10292 | 25 – 2 |
| 91312–05016 | 3 – 15 |
| 91312–06014 | 42 – 10 |
| 91312–06020 | 8 – 3 |
| 91312–08020 | 16 – 11 |
| 91312–08025 | 31 – 41 |
| | 31 – 51 |
| 91317–06025 | 30 – 17 |
| 91317–06030 | 29 – 29 |
| 91317–08016 | 32 – 22 |
| 91317–08020 | 32 – 21 |
| 91332–05010 | 23 – 15 |
| 91332–06016 | 34 – 4 |
| 91332–06025 | 34 – 3 |
| 91337–06020 | 40 – 8 |
| 91401–20012 | 32 – 25 |
| 91401–25015 | 31 – 25 |
| | 31 – 32 |
| | 31 – 39 |
| | 31 – 49 |
| 91401–30030 | 31 – 4 |
| | 31 – 8 |
| 91701–08035 | 31 – 24 |
| | 31 – 31 |
| 91702–08042 | 31 – 36 |
| | 31 – 46 |
| 91810–07804 | 4 – 4 |
| 91810–14808 | 1 – 21 |
| | 1 – 22 |
| | 10 – 2 |
| | 11 – 3 |
| | 11 – 12 |
| 92012–05012 | 29 – 24 |
| 93101–10843 | 11 – 17 |
| 93102–08800 | 1 – 14 |
| 93102–12808 | 16 – 8 |
| 93102–12810 | 13 – 29 |
| 93102–22827 | 14 – 21 |
| 93103–10801 | 5 – 2 |
| 93106–20816 | 25 – 3 |
| 93106–22808 | 27 – 5 |

| PART NO. | REF. NO. |
|---|---|
| 93106–26815 | 27 – 8 |
| 93210–09807 | 4 – 3 |
| 93210–14899 | 11 – 6 |
| 93210–15620 | 32 – 7 |
| 93210–19809 | 5 – 14 |
| | 11 – 16 |
| 93210–21802 | 42 – 4 |
| 93210–26806 | 35 – 6 |
| 93210–34804 | 7 – 6 |
| 93210–39803 | 5 – 11 |
| 93210–54808 | 7 – 12 |
| 93306–000Y3 | 5 – 7 |
| 93306–001YL | 4 – 6 |
| 93306–004XV | 27 – 9 |
| 93306–054XF | 14 – 2 |
| 93306–203XR | 14 – 19 |
| 93306–253YM | 2 – 21 |
| | 2 – 22 |
| 93306–272YC | 14 – 20 |
| 93306–300YN | 25 – 4 |
| 93306–355Y8 | 2 – 6 |
| 93306–906X4 | 4 – 2 |
| 93310–325YC | 12 – 4 |
| 93310–526YT | 2 – 2 |
| 93315–112Y9 | 13 – 28 |
| 933A6–202X0 | 14 – 3 |
| 933A6–202Y9 | 27 – 3 |
| 93410–22039 | 14 – 11 |
| | 14 – 17 |
| 93450–15175 | 2 – 10 |
| 93501–04823 | 31 – 38 |
| | 31 – 48 |
| 93505–16844 | 13 – 27 |
| 93604–06083 | 4 – 5 |
| 93604–08071 | 2 – 17 |
| 93604–10011 | 15 – 3 |
| 93608–30839 | 16 – 7 |
| 93822–14800 | 14 – 22 |
| 93900–00817 | 25 – 6 |
| | 27 – 15 |
| 94109–17809 | 25 – 5 |
| 94112–17809 | 27 – 14 |
| 94568–J9096 | 4 – 12 |
| 94568–K8124 | 27 – 24 |
| 94700–00415 | 1 – 19 |
| 95022–06012 | 24 – 10 |
| | 41 – 8 |
| 95022–06014 | 18 – 17 |

| PART NO. | REF. NO. |
|---|---|
| 95022–06020 | 18 – 13 |
| 95027–06020 | 5 – 8 |
| 95301–08700 | 32 – 3 |
| 95302–06600 | 27 – 22 |
| 95602–06100 | 30 – 14 |
| 95602–06200 | 18 – 22 |
| 95602–08200 | 27 – 12 |
| | 31 – 14 |
| 95602–10200 | 20 – 11 |
| | 25 – 9 |
| 95602–14200 | 27 – 17 |
| 95607–06100 | 40 – 6 |
| 95612–08635 | 1 – 6 |
| 95614–12100 | 20 – 5 |
| 95702–06500 | 38 – 7 |
| | 42 – 17 |
| 95702–08500 | 9 – 7 |
| 95702–12500 | 34 – 5 |
| 95812–06030 | 8 – 12 |
| 95812–10020 | 17 – 4 |
| 95817–10025 | 17 – 5 |
| 95D02–06012 | 17 – 3 |
| | 21 – 9 |
| | 21 – 11 |
| | 21 – 15 |
| | 42 – 27 |
| 95D32–06014 | 41 – 27 |
| 95D32–06016 | 42 – 13 |
| 95D32–06020 | 24 – 14 |
| 95D32–06025 | 6 – 18 |
| | 23 – 2 |
| 95D32–08016 | 31 – 18 |
| 95D32–08035 | 9 – 9 |
| 95D32–10035 | 28 – 4 |
| 95E32–06010 | 1 – 4 |
| | 1 – 26 |
| | 14 – 24 |
| 95E32–06012 | 7 – 14 |
| 95E32–06014 | 4 – 11 |
| 95E32–06016 | 11 – 9 |
| 95E32–06020 | 6 – 3 |
| | 7 – 10 |
| 95E32–06025 | 4 – 21 |
| | 5 – 13 |
| 95E32–06030 | 1 – 11 |
| 95E32–06040 | 10 – 6 |
| | 11 – 4 |
| | 11 – 13 |

| PART NO. | REF. NO. |
|---|---|
| 95E32–06045 | 10 – 4 |
| 95E32–06050 | 11 – 14 |
| 95E32–06055 | 10 – 3 |
| 95E32–06070 | 10 – 5 |
| 95E32–06080 | 7 – 11 |
| 95E32–06090 | 11 – 18 |
| 97002–06016 | 41 – 2 |
| 97022–06012 | 18 – 5 |
| 97602–04312 | 30 – 18 |
| 97602–05225 | 31 – 22 |
| | 31 – 29 |
| 97702–30016 | 37 – 3 |
| 97707–50012 | 18 – 8 |
| | 19 – 4 |
| | 19 – 9 |
| | 19 – 22 |
| | 29 – 9 |
| | 33 – 28 |
| | 33 – 41 |
| | 39 – 3 |
| | 42 – 22 |
| 97707–50016 | 33 – 4 |
| | 33 – 21 |
| | 33 – 33 |
| | 33 – 49 |
| | 33 – 55 |
| | 36 – 5 |
| 98502–05016 | 42 – 5 |
| 98507–06025 | 32 – 19 |
| 98512–06012 | 14 – 5 |
| 98907–04016 | 39 – 7 |
| 99002–10600 | 16 – 6 |
| 99009–10400 | 5 – 6 |
| 99009–20500 | 13 – 30 |
| 99530–08012 | 1 – 12 |
| | 5 – 10 |