YAMAHA

PARTS CATALOGUE

RYC1

VPBC5

MS1

T155 (BAX1) MALAYSIA

YAMAHA GENUINE Parts & Accessories

1WBAX-440E1

( )

T155
PARTS CATALOGUE
©2021 by Yamaha Motor Co., Ltd.
1st edition, July 2021
All rights reserved.
Any reprinting or unauthorized use
without the written permission of
Yamaha Motor Co., Ltd.
is expressly prohibited.
Printed in Japan.

FOREWORD

This Parts Catalogue is related to the parts for the model(s) on the cover page. When you are ordering replacement parts, please refer to this Parts Catalogue and quote both part numbers and part names correctly.

1. Modifications or additions which have been made after the issue of the Parts Catalogue will be announced in the Parts News.
   It is advisable that you make the necessary corrections to the Parts Catalogue according to the Parts News.

2. Abbreviations
   The following abbreviations are used in this Parts Catalogue.

   "UR" Use specified parts number.

   "UN" Use as many as needed.

   "AP" Alternate Parts

   "LM" Locally Made (Parts need to be ordered locally)

   "F#" Frame No. (Applicable machine No.)

   "O/S" Over Size

3. The number of components for assembly
   - Parts, which are to be supplied in an assembly, are listed with a dot (.) in front of the part name as shown below.
   - The numeral appearing to the right of each component part indicates the quantity of parts for each assembly unit.

PART NO.	DESCRIPTION	Q'TY	REMARKS
2F5–83310–60	FRONT FLASHER LIGHT ASSY	2	
115–83311–60	.BULB (6V–18W)	1	

4. Applicable colours of graphics are represented in the "REMARKS" as shown below.

PART NO.	DESCRIPTION	Q'TY	REMARKS
2N4–24110–00–X5	FUEL TANK COMP.	2	MXR
3J1–24240–10	.GRAPHIC, FUEL TANK	1	FOR MXR

5. Note that the illustrations for reference in finding parts numbers are not to be used for assembling. When assembling, please use the applicable service manual.

6. The asterisk (*) before a reference number indicates modified items after the first edition.

7. Applicable Serial No.

Frame Serial No.

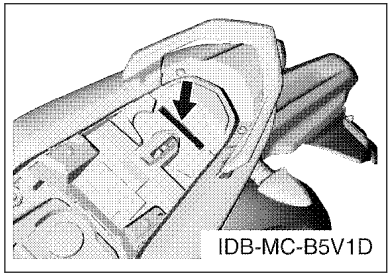

Engine Serial No.

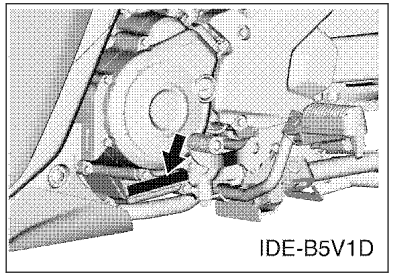

8. Applicable Colour Code (The (*) mark shows Model colour.)

Abbreviation	Colour Name	Colour Code
DBNM8	DARK BLUISH GRAY METALLIC 8	0919
MBL2	MAT BLACK 2	0582
MNM3	MAT GRAY METALLIC 3	1278
MS1(*)	MAT SILVER 1	1160
RYC1(*)	REDDISH YELLOW COCKTAIL 1	0251
SMX	BLACK METALLIC X	0903
VPBC5(*)	VIVID PURPLISH BLUE COCKTAIL 5	1177
YB	YAMAHA BLACK	0033

9. Applicable Starting Serial No.

Frame Serial No.

Serial No.	Name Of Q'ty Column	Model Code

Engine Serial No.

Serial No.	Name Of Q'ty Column	Model Code

CONTENTS

ENGINE

CYLINDER HEAD....1
CRANKSHAFT & PISTON....3
VALVE....4
CAMSHAFT & CHAIN....5
WATER PUMP....6
RADIATOR & HOSE....7
OIL PUMP....8
INTAKE....9
EXHAUST....11
CRANKCASE....12
CRANKCASE COVER 1....13
STARTER CLUTCH....14
CLUTCH....15
TRANSMISSION....17
SHIFT CAM & FORK....18
SHIFT SHAFT....19

CHASSIS

FRAME....20
FENDER....21
SIDE COVER....22
REAR ARM & SUSPENSION....24
STEERING....25
FRONT FORK....26
FUEL TANK....28
SEAT....29
FRONT WHEEL....30
FRONT BRAKE CALIPER....31
REAR WHEEL....32
REAR BRAKE CALIPER....34
STEERING HANDLE & CABLE....35
FRONT MASTER CYLINDER....37
STAND & FOOTREST....38
REAR MASTER CYLINDER....40
LEG SHIELD....42
GENERATOR....46
STARTING MOTOR....47
FLASHER LIGHT....48
METER....49
HEADLIGHT....50
TAILLIGHT....51
HANDLE SWITCH & LEVER....52
ELECTRICAL 1....53
ELECTRICAL 2....55

INDEX

NUMERICAL INDEX....56

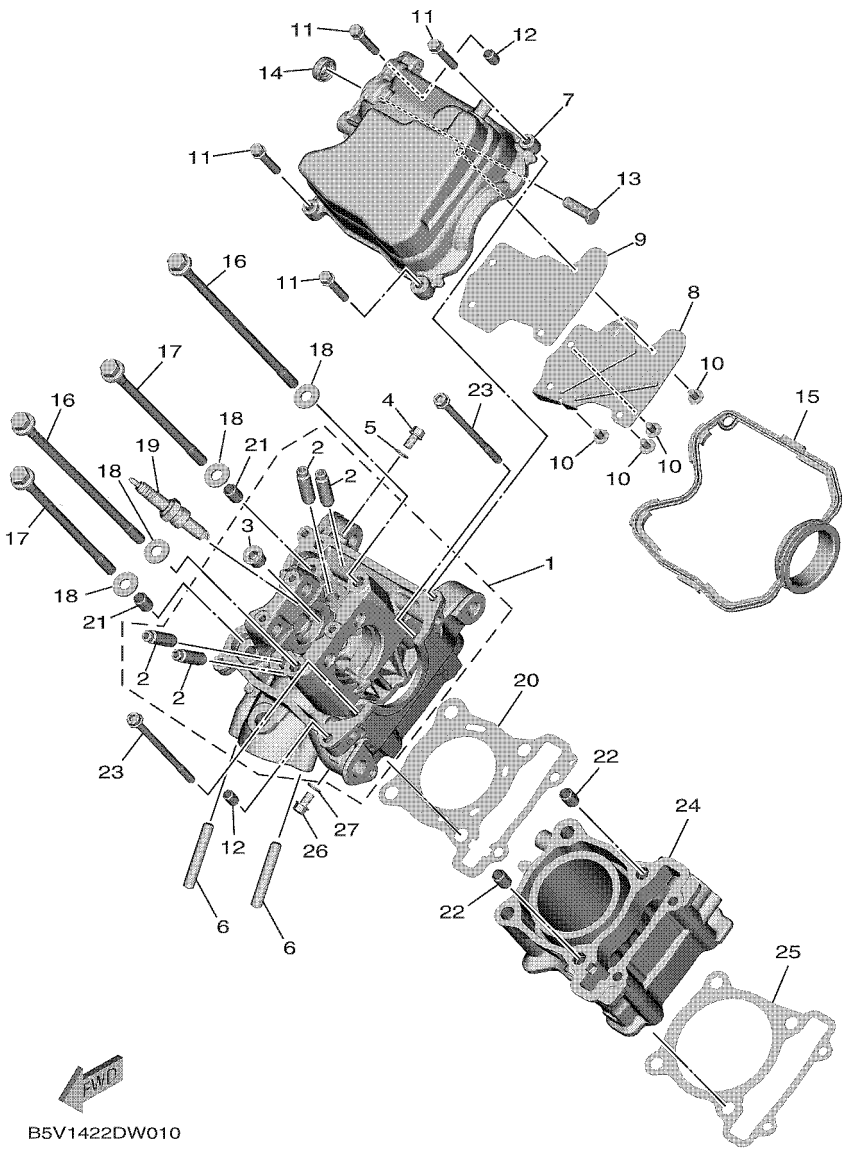

FIG. 1 CYLINDER HEAD

REF. NO.	PART NO.	DESCRIPTION	BAX1					REMARKS
1	BAX–E1102–00	CYLINDER HEAD ASSY	1					
2	B63–E1133–10	.GUIDE, VALVE 1	4					
3	90340–12813	.PLUG, STRAIGHT SCREW	1					
4	95E32–06010	BOLT, FLANGE DEEP RECESS	1					
5	90430–06803	GASKET	1					
6	95612–08635	BOLT, STUD	2					
7	B5V–E1191–00	COVER, CYLINDER HEAD 1	1					
8	B5V–E1165–00	PLATE, BREATHER	1					
9	B5V–E1169–00	GASKET, BREATHER COVER	1					
10	90149–05801	SCREW	4					
11	95E32–06030	BOLT, FLANGE DEEP RECESS	4					
12	99530–08012	PIN, DOWEL	2					
13	BAX–E132G–00	ROD 1	1					UR
	B5V–E132G–00	ROD 1	1					UR
14	93102–08800	OIL SEAL	1					
15	B3F–E1193–00	GASKET, HEAD COVER 1	1					
16	90105–088J0	BOLT, FLANGE	2					
17	90105–088H9	BOLT, FLANGE	2					
18	90201–08859	WASHER, PLATE	4					
19	94700–00415	PLUG, SPARK (NGK CPR8EA)	1					
20	2DP–E1181–00	GASKET, CYLINDER HEAD 1	1					
21	91810–14808	PIN, DOWEL	2					
22	91810–14808	PIN, DOWEL	2					
23	90110–06894	BOLT, HEXAGON SOCKET HEAD	2					
24	B5V–E1311–00	CYLINDER 1	1					
25	B0T–E1351–00	GASKET, CYLINDER	1					
26	95E32–06010	BOLT, FLANGE DEEP RECESS	1					

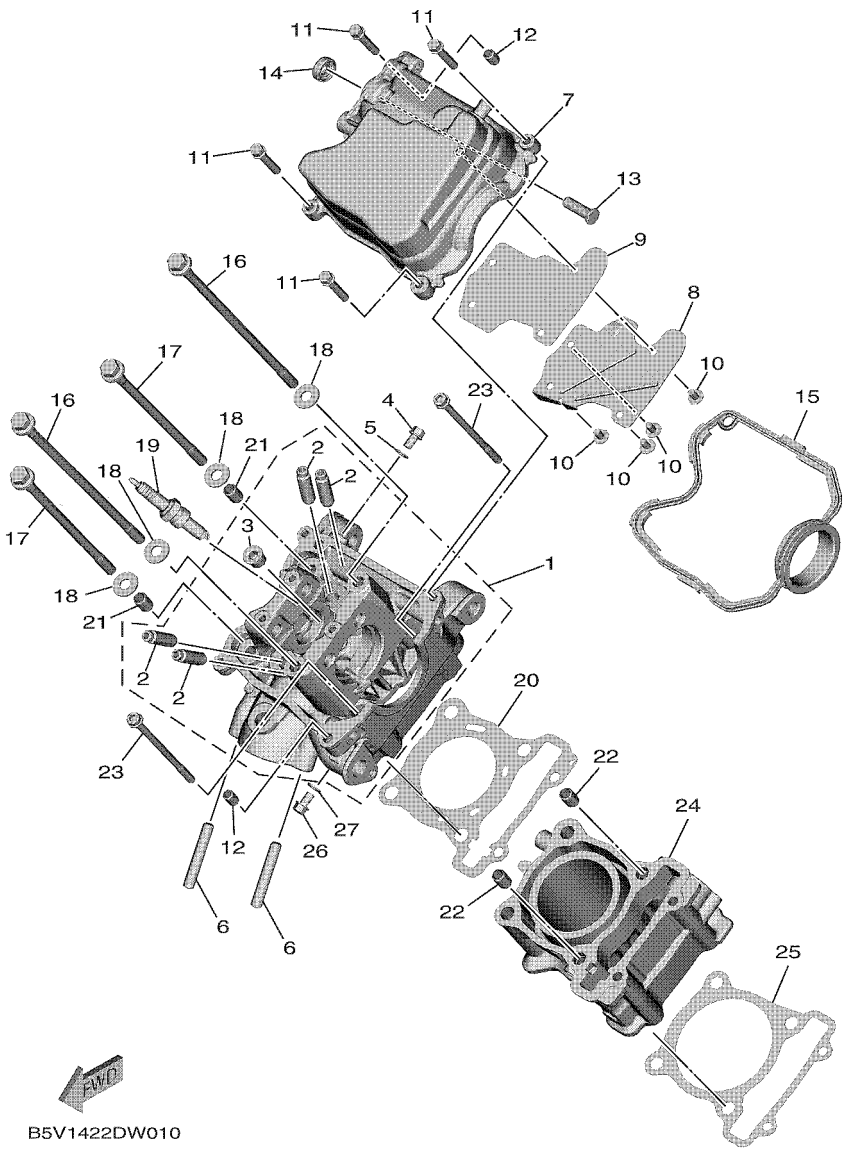

FIG. 1 CYLINDER HEAD

REF. NO.	PART NO.	DESCRIPTION	BAX1					REMARKS
27	90430–06803	GASKET	1					

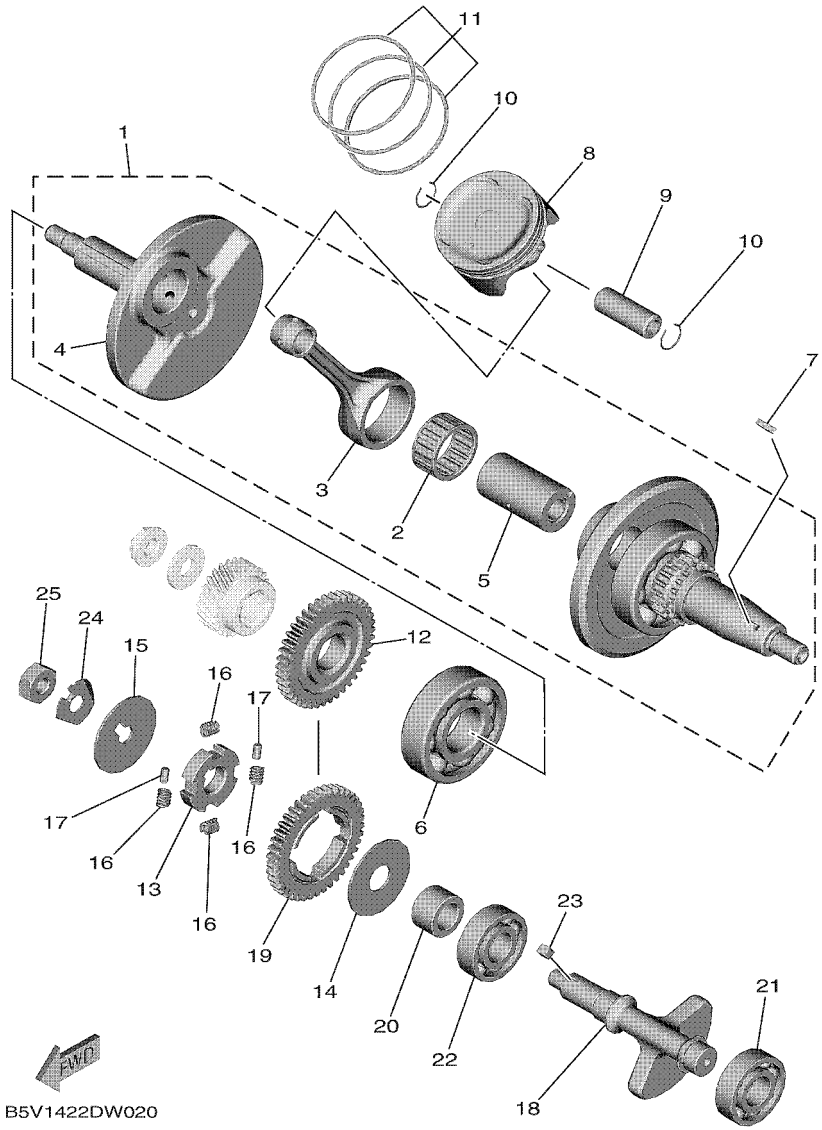

FIG. 2 CRANKSHAFT & PISTON

REF. NO.	PART NO.	DESCRIPTION	BAX1					REMARKS
1	B5V–WE140–00	CRANKSHAFT ASSY	1					
2	93310–526YT	.BEARING	1					
3	B5V–E1651–00	.ROD, CONNECTING	1					
4	B5V–E1422–00	.CRANK 2	1					
5	BK6–E1681–00	.PIN, CRANK 1	1					
6	93306–355Y8	BEARING	1					
7	90280–03017	KEY, WOODRUFF	1					
8	B5V–E1631–00	PISTON (STD)	1					
9	5YP–E1633–00	PIN, PISTON	1					
10	93450–15175	CIRCLIP	2					
11	B5V–E1603–00	PISTON RING SET (STD)	1					
12	2ND–E1536–00	GEAR, DRIVE	1					
13	2ND–E1496–00	BOSS, BUFFER	1					
14	90201–15821	WASHER, PLATE	1					
15	90214–10800	WASHER, CLAW	1					
16	90501–16800	SPRING, COMPRESSION	4					
17	93604–08071	PIN, DOWEL	2					
18	BAX–E1454–00	WEIGHT 1	1					
19	2ND–E1531–10	GEAR, BALANCE WEIGHT	1					
20	90387–15810	COLLAR	1					
21	93306–253YM	BEARING	1					
22	93306–253YM	BEARING	1					
23	90282–05031	KEY, STRAIGHT	1					
24	90215–10803	WASHER, LOCK	1					
25	90170–10012	NUT	1					

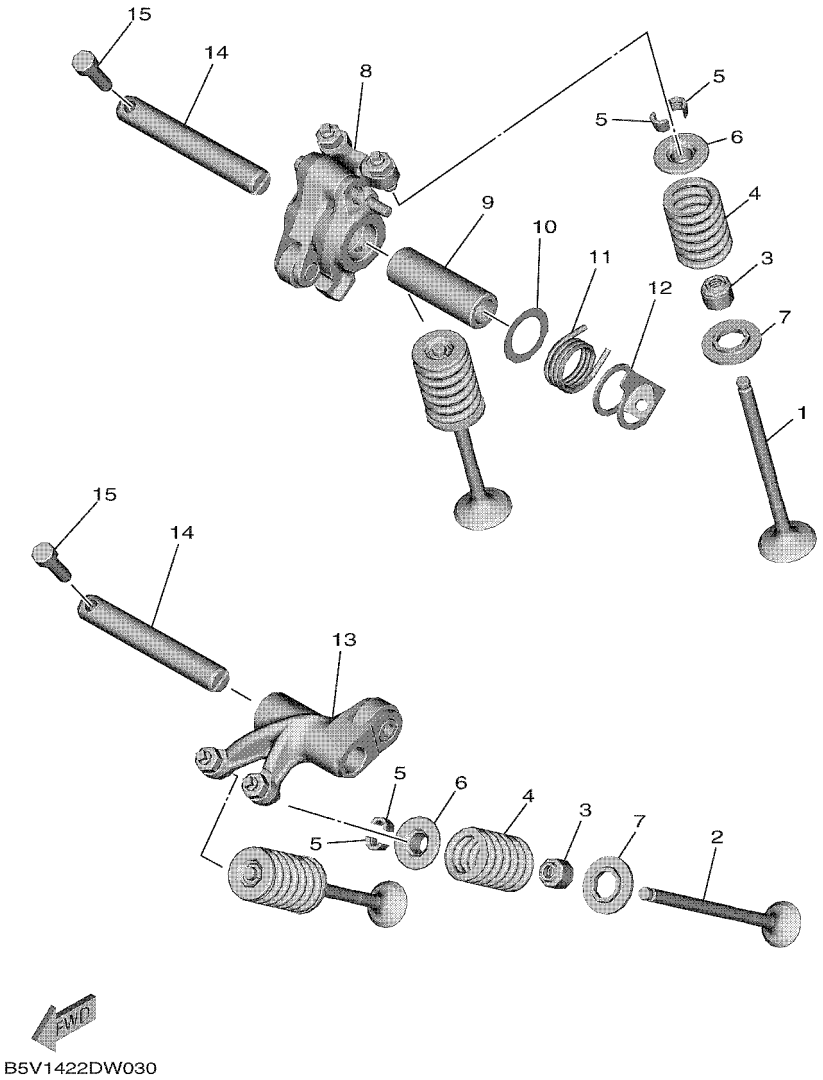

FIG. 3 VALVE

REF. NO.	PART NO.	DESCRIPTION	BAX1					REMARKS
1	B5V–E2111–01	VALVE, INTAKE	2					
2	B5V–E2121–00	VALVE, EXHAUST	2					
3	B63–E2119–00	SEAL, VALVE STEM	4					
4	B63–E2113–00	SPRING, VALVE INNER	4					
5	5TL–E2118–00	LOCK, VALVE SPRING RETAINER	8					
6	B63–E2117–01	RETAINER, VALVE SPRING	2					
7	55P–E2126–00	SEAT, VALVE SPRING 2	4					
8	B5V–E2150–00	VALVE ROCKER ARM ASSY	1					
9	BAX–E2166–00	SHAFT, ROCKER 3	1					UR
	B5V–E2166–10	SHAFT, ROCKER 3	1					UR
10	B5V–E1557–00	WASHER 1	1					
11	BK6–E2226–00	SPRING, COIL	1					
12	BAX–E2279–00	PLATE	1					
13	B5V–E2160–01	VALVE ROCKER ARM ASSY 2	1					
14	BAX–E2156–00	SHAFT, ROCKER 2	2					UR
	B5V–E2156–00	SHAFT, ROCKER 2	2					UR
15	91312–05016	BOLT, HEXAGON SOCKET HEAD	2					

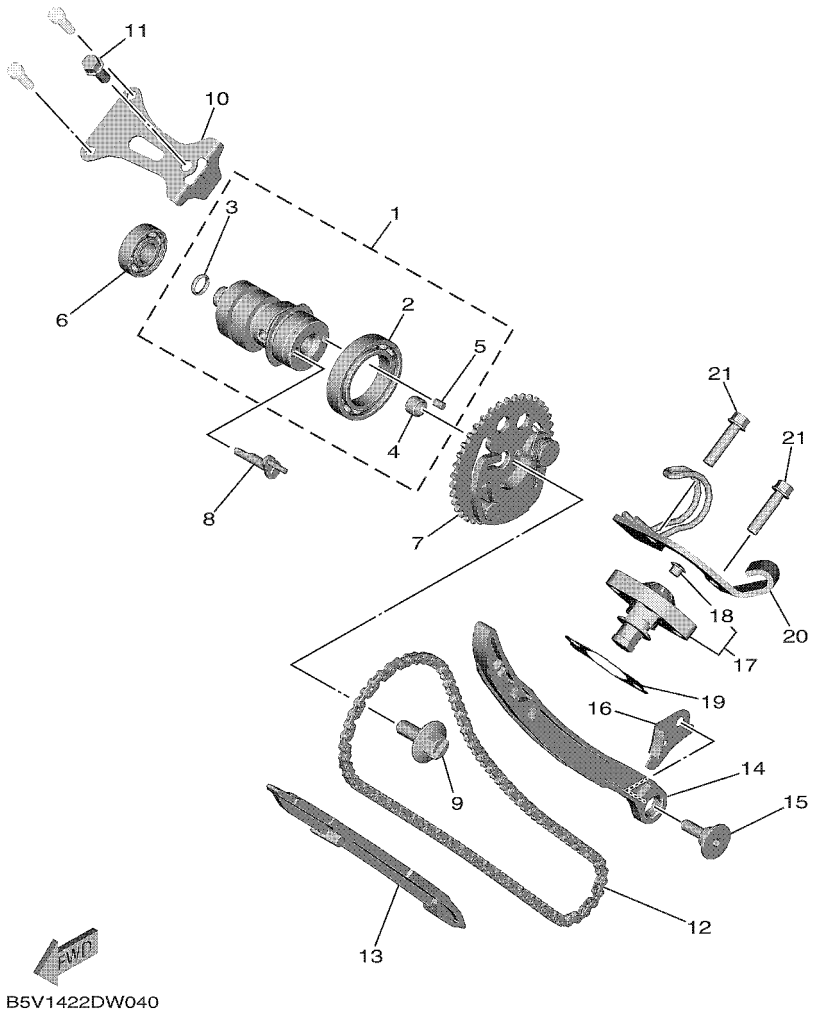

FIG. 4 CAMSHAFT & CHAIN

REF. NO.	PART NO.	DESCRIPTION	BAX1					REMARKS
1	BAX–E2170–00	CAMSHAFT ASSY 1	1					
2	93306–906X4	.BEARING	1					
3	93210–09807	.O-RING	1					
4	91810–07804	.PIN, DOWEL	1					
5	93604–06083	.PIN, DOWEL	1					
6	93306–001YL	BEARING	1					
7	B3M–E2280–00	DECOMPRESSION ASSY	1					
8	B6H–E2288–00	CAM, DECOMPRESSION	1					
9	B63–E2157–00	BOLT	1					
10	BAX–E111F–00	PLATE	1					
11	95E32–06014	BOLT, FLANGE DEEP RECESS	1					
12	94568–J9096	CHAIN	1					
13	B63–E2231–00	GUIDE, STOPPER 1	1					
14	B5V–E2241–00	GUIDE, STOPPER 2	1					
15	1DR–E2228–00	BOLT	1					
16	BAX–E2256–00	COVER, CHAIN	1					
17	2ND–E2210–20	TENSIONER ASSY, CAM CHAIN	1					
18	5MX–E2222–00	.PLUG	1					
19	BAX–E2213–00	GASKET, TENSIONER CASE	1					
20	B5V–E5441–00	HOLDER, CLUTCH CABLE	1					
21	95E32–06025	BOLT, FLANGE DEEP RECESS	2					

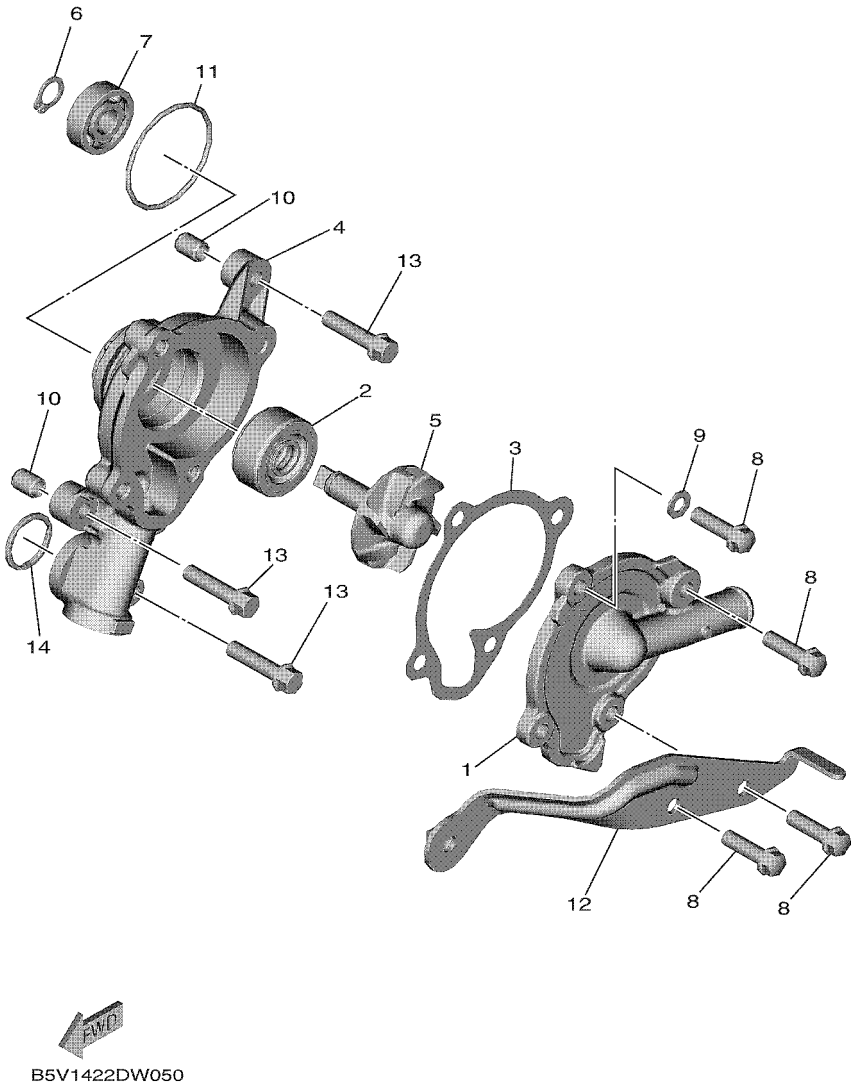

FIG. 5 WATER PUMP

REF. NO.	PART NO.	DESCRIPTION	BAX1					REMARKS
1	BT3–E2422–00	COVER, HOUSING	1					
2	93103–10801	OIL SEAL	1					
3	2DP–E2428–00	GASKET, HOUSING COVER 2	1					
4	B63–E1185–01	COVER, CYLINDER HEAD SIDE 3	1					
5	2DP–E2450–00	IMPELLER SHAFT ASSY	1					
6	99009–10400	CIRCLIP	1					
7	93306–000Y3	BEARING	1					
8	95027–06020	BOLT, FLANGE	4					
9	90430–06803	GASKET	1					
10	99530–08012	PIN, DOWEL	2					
11	93210–39803	O-RING	1					
12	B5V–E2443–10	STAY	1					
13	95E32–06025	BOLT, FLANGE DEEP RECESS	3					
14	93210–19809	O-RING	1					

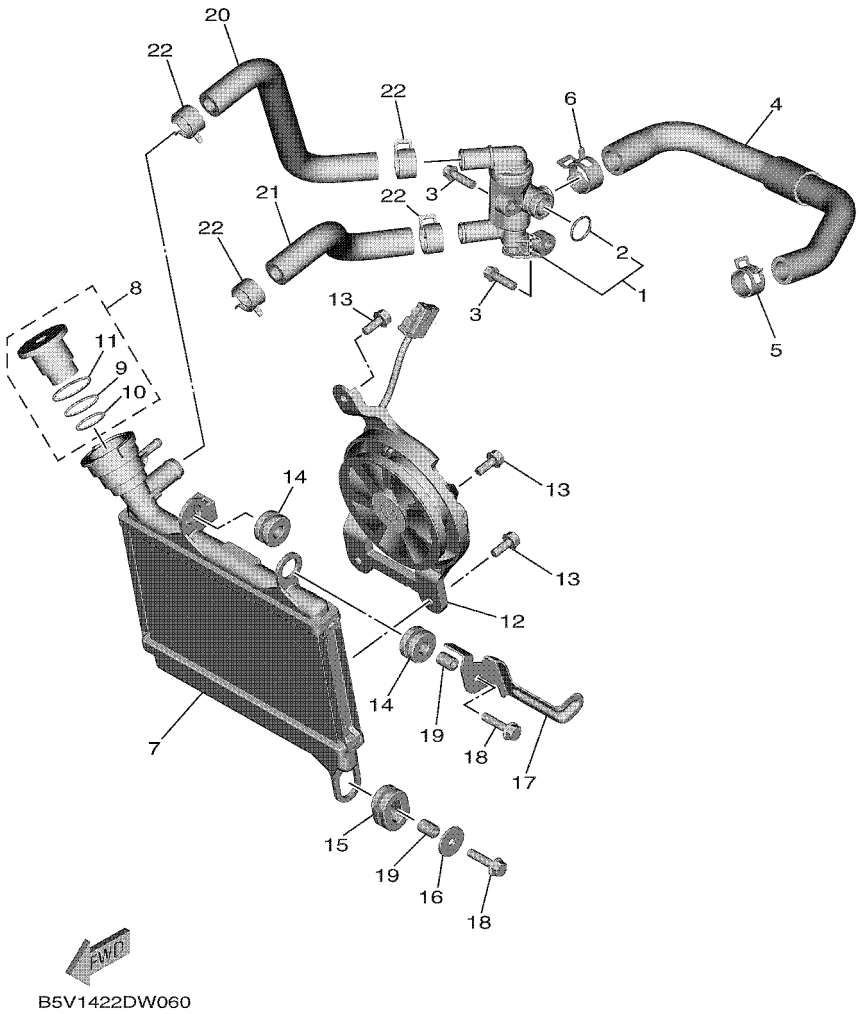

FIG. 6 RADIATOR & HOSE

REF. NO.	PART NO.	DESCRIPTION	BAX1					REMARKS
1	BK6–E2410–00	THERMOSTAT ASSY	1					
2	52S–12439–00	.O-RING	1					
3	95E32–06020	BOLT, FLANGE DEEP RECESS	2					
4	B5V–E2483–00	PIPE 3	1					
5	90467–19803	CLIP	1					
6	90467–20806	CLIP	1					
7	B5V–E2461–00	RADIATOR COMP	1					
8	B65–E2462–02	CAP, RADIATOR	1					
9	B65–E2439–00	.O-RING	1					
10	B65–E2843–00	.O-RING	1					
11	B63–E22A2–00	.O-RING	1					
12	B5V–E2405–00	BLOWER ASSY	1					
13	5YP–E2675–00	BOLT, BLOWER HOLDING	3					
14	90480–15808	GROMMET	2					
15	90480–01803	GROMMET	1					
16	90201–06880	WASHER, PLATE	1					
17	BAX–E244E–00	BRACKET 1	1					
18	95D32–06025	BOLT, FLANGE DEEP RECESS	2					
19	90387–06144	COLLAR	2					
20	BAX–E2481–00	PIPE 1	1					
21	BAX–E2482–00	PIPE 2	1					
22	90467–19803	CLIP	4					

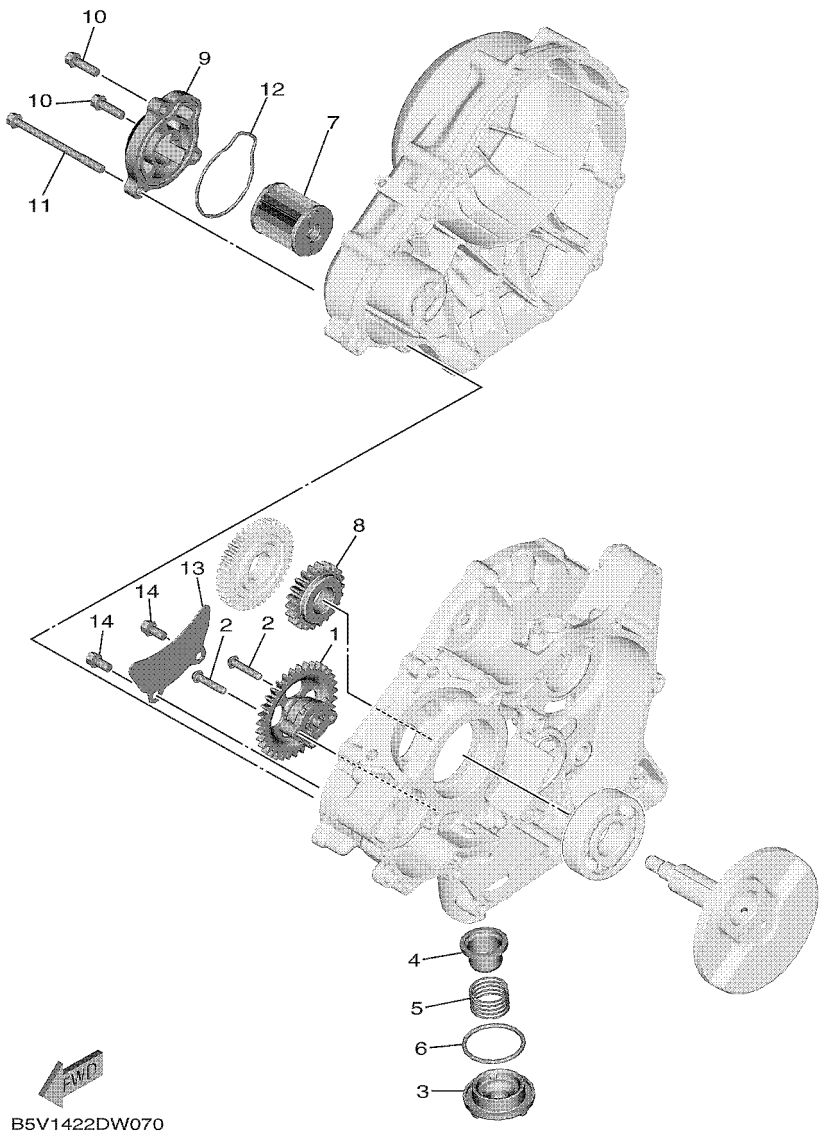

FIG. 7 OIL PUMP

REF. NO.	PART NO.	DESCRIPTION	BAX1					REMARKS
1	2ND–E3300–01	OIL PUMP ASSY	1					
2	90111–05808	BOLT,HEX. SOCKET BUTTON	2					
3	1S8–E5351–00	PLUG, DRAIN	1					
4	38B–E3411–00	STRAINER, OIL	1					
5	90501–18576	SPRING, COMPRESSION	1					
6	93210–34804	O-RING	1					
7	38B–E3440–01	ELEMENT ASSY, OIL CLEANER	1					
8	2ND–E3324–10	GEAR, PUMP DRIVE	1					
9	55C–E3447–00	COVER, OIL ELEMENT	1					
10	95E32–06020	BOLT, FLANGE DEEP RECESS	2					
11	95E32–06080	BOLT, FLANGE DEEP RECESS	1					
12	93210–54808	O-RING	1					
13	3C1–E3327–00	COVER, PUMP GEAR	1					
14	95E32–06012	BOLT, FLANGE DEEP RECESS	2					

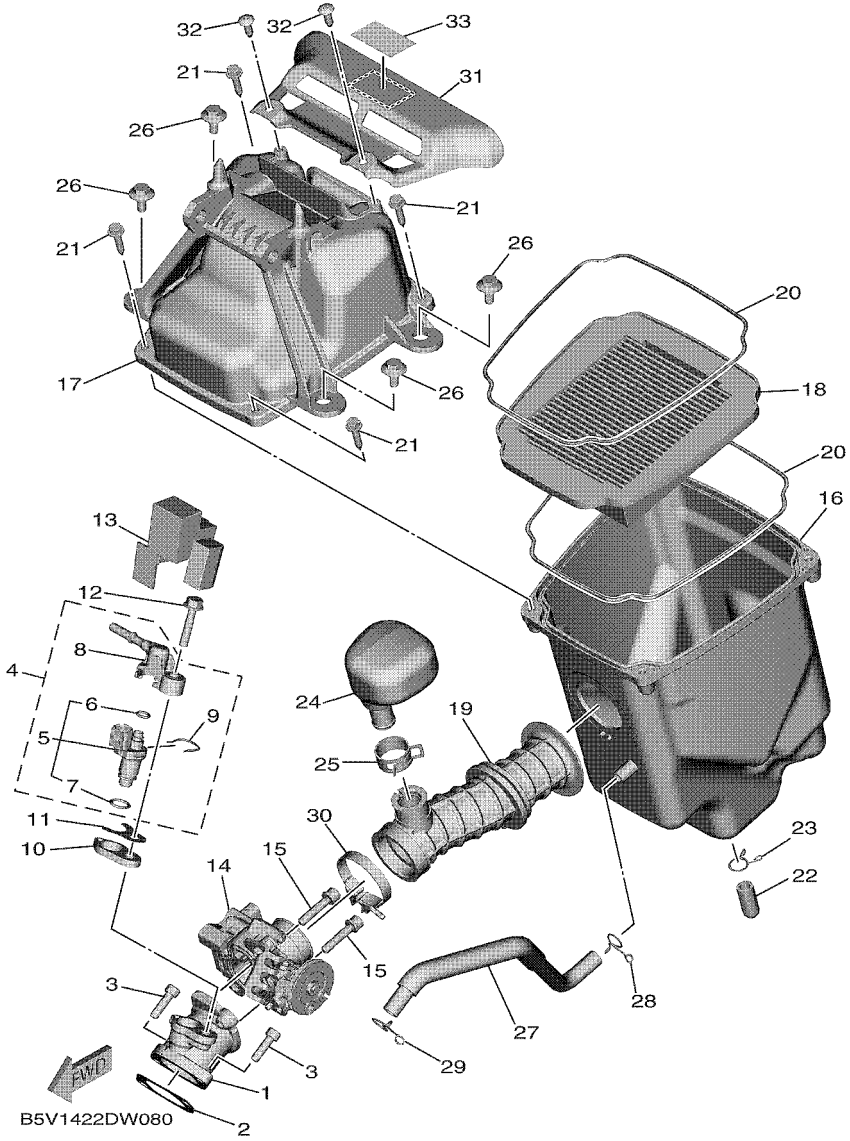

FIG. 8 INTAKE

REF. NO.	PART NO.	DESCRIPTION	BAX1					REMARKS
1	BK6–E3585–00	MANIFOLD	1					
2	BAX–E4199–00	GASKET	1					
3	91312–06020	BOLT, HEXAGON SOCKET HEAD	2					
4	BK6–E3770–00	INJECTOR ASSY	1					
5	BK6–E3761–00	.INJECTOR	1					
6	54P–E4147–00	..O-RING	1					
7	5CA–E4147–00	..O-RING	1					
8	54P–E3938–00	.PIPE	1					
9	54P–E4137–00	.CLIP	1					
10	2FB–E3556–00	GASKET, MANIFOLD	1					
11	BAX–E3557–00	GASKET	1					
12	95812–06030	BOLT, FLANGE	1					
13	2ND–E3767–10	CAP, INJECTOR	1					
14	B5V–E3750–00	THROTTLE BODY ASSY	1					
15	90110–06846	BOLT, HEXAGON SOCKET HEAD	2					
16	B5V–E4411–00	CASE, AIR CLEANER 1	1					
17	B5V–E4412–00	CAP, CLEANER CASE 1	1					
18	B5V–E4450–00	ELEMENT ASSY, AIR CLEANER	1					
19	B5V–E4453–00	JOINT, AIR CLEANER 1	1					
20	2ND–E4452–00	SEAL	2					
21	90163–05803	SCREW, TAPPING	4					
22	5WP–E443E–00	PIPE, DRAIN	1					
23	90467–11019	CLIP	1					
24	B5V–E4877–00	RESONATOR	1					
25	90467–22802	CLIP	1					
26	90109–06202	BOLT	4					
27	B5V–E1166–00	PIPE, BREATHER 1	1					

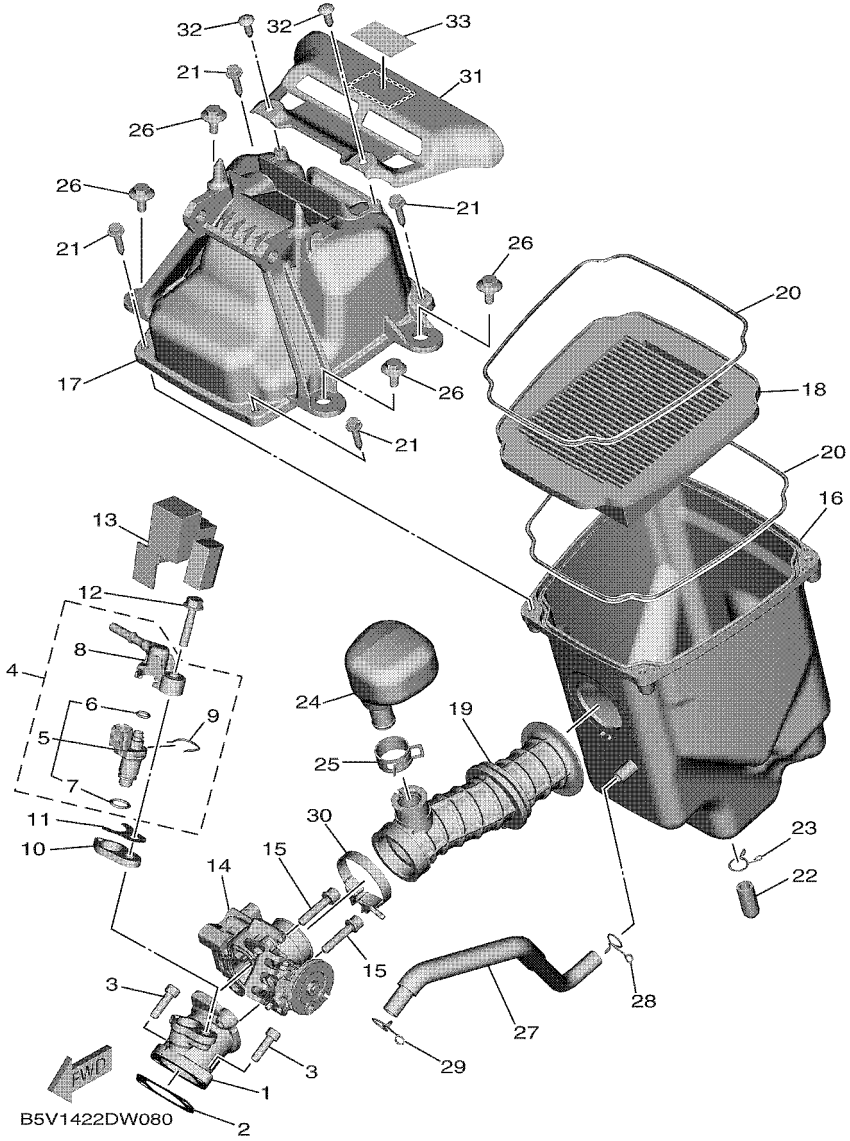

FIG. 8 INTAKE

REF. NO.	PART NO.	DESCRIPTION	BAX1					REMARKS
28	90467–11825	CLIP	1					
29	90467–12052	CLIP	1					
30	90450–43805	HOSE CLAMP ASSY	1					
31	B5V–E4417–00	COVER 1	1					
32	90160–05012	SCREW, ROUND TAPPING	2					
33	55C–F815P–00	LABEL, NOTICE 1	1					

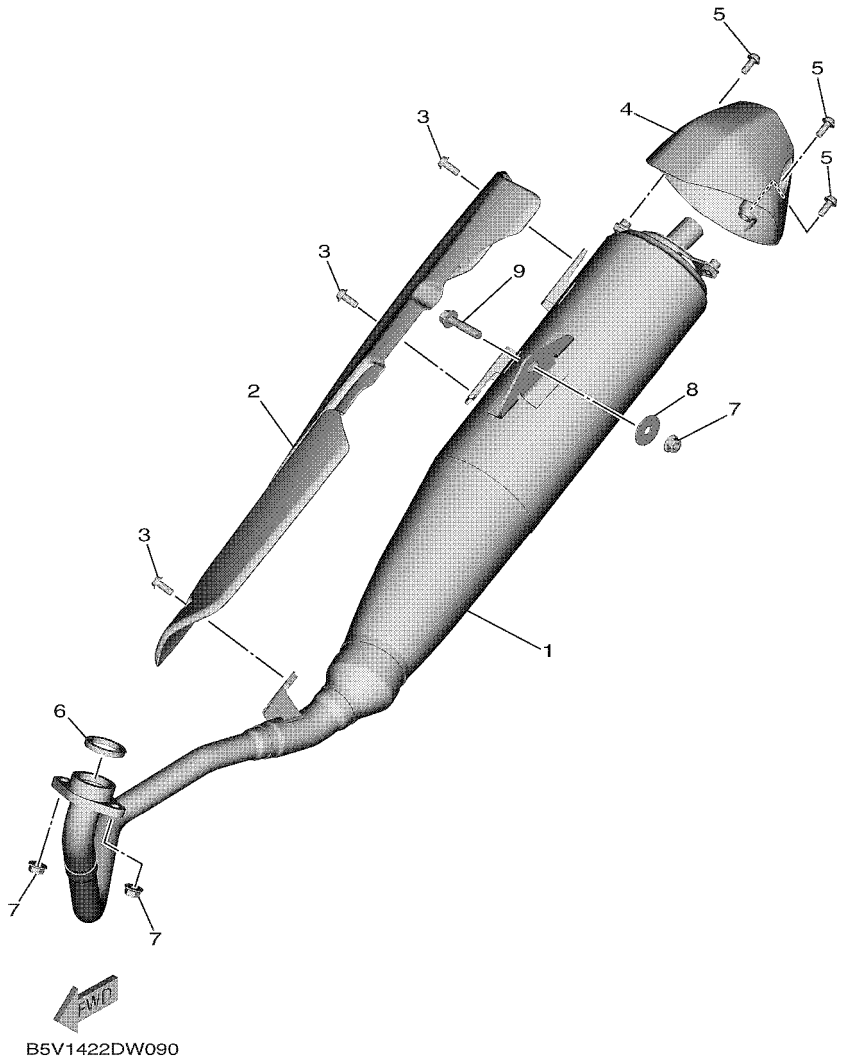

FIG. 9 EXHAUST

REF. NO.	PART NO.	DESCRIPTION	BAX1					REMARKS
1	BAX–E4703–00	MUFFLER COMP. 1	1					
2	BAX–E4718–00	PROTECTOR, MUFFLER 1	1					
3	90111–06807	BOLT,HEX. SOCKET BUTTON	3					
4	BAX–E4799–00	CAP	1					
5	90111–06807	BOLT,HEX. SOCKET BUTTON	3					
6	BK7–E4613–00	GASKET, EXHAUST PIPE	1					
7	95702–08500	NUT, FLANGE	3					
8	90201–08612	WASHER, PLATE	1					
9	95D32–08035	BOLT, FLANGE DEEP RECESS	1					

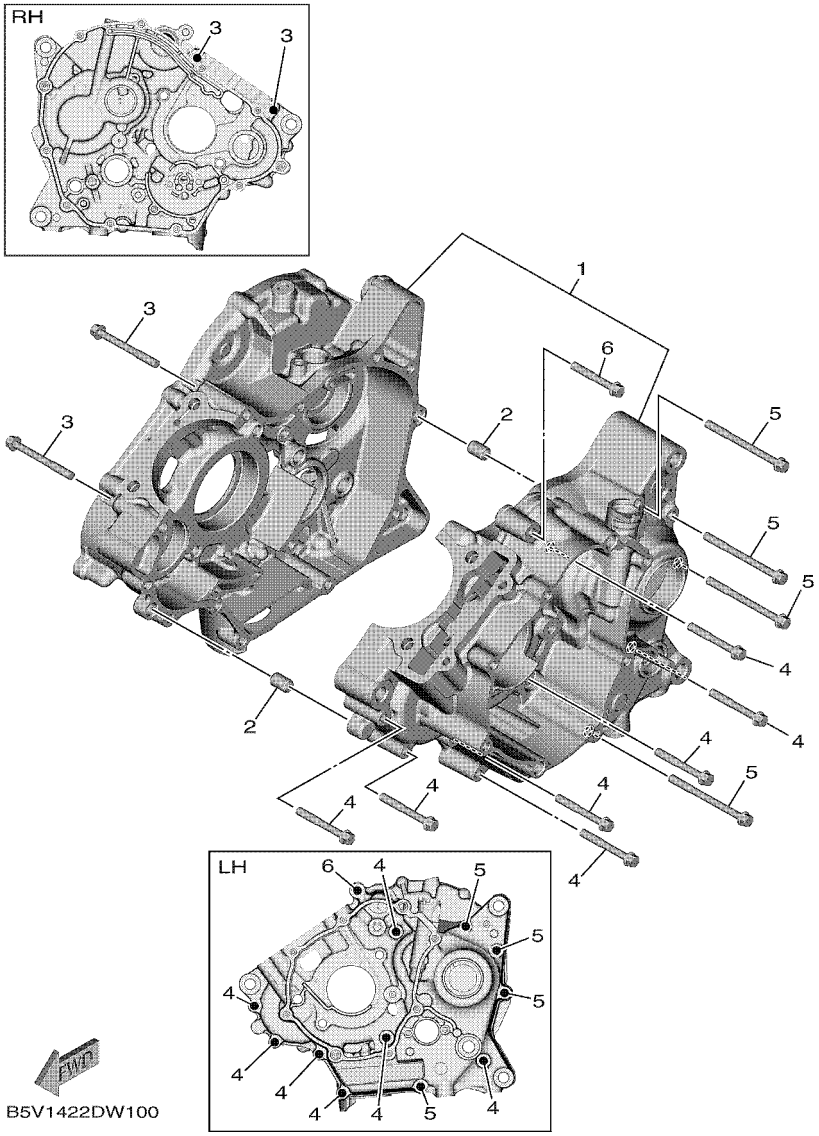

FIG. 10 CRANKCASE

REF. NO.	PART NO.	DESCRIPTION	BAX1					REMARKS
1	BAX–E5150–00	CRANKCASE ASSY	1					
2	91810–14808	PIN, DOWEL	2					
3	95E32–06055	BOLT, FLANGE DEEP RECESS	2					
4	95E32–06045	BOLT, FLANGE DEEP RECESS	7					
5	95E32–06070	BOLT, FLANGE DEEP RECESS	4					
6	95E32–06040	BOLT, FLANGE DEEP RECESS	1					

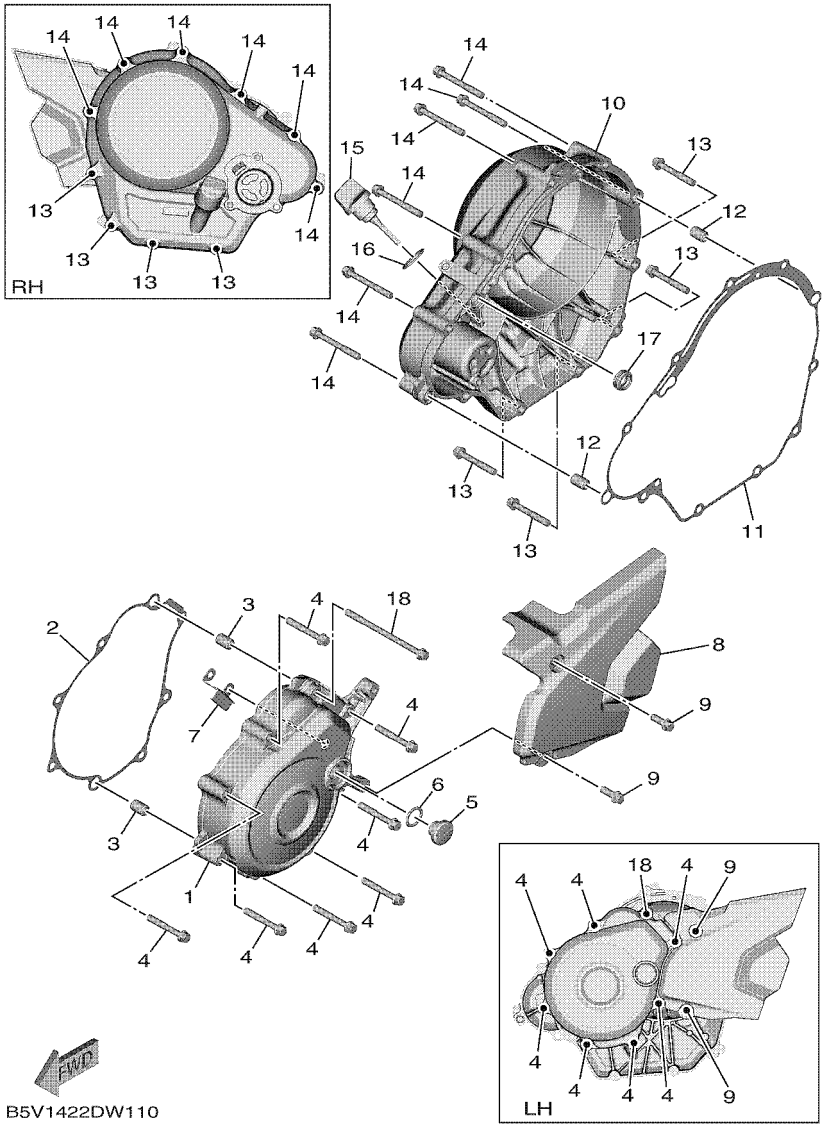

FIG. 11 CRANKCASE COVER 1

REF. NO.	PART NO.	DESCRIPTION	BAX1					REMARKS
1	BAX–E5411–00	COVER, CRANKCASE 1	1					
2	BAX–E5451–00	GASKET, CRANKCASE COVER 1	1					
3	91810–14808	PIN, DOWEL	2					
4	95E32–06040	BOLT, FLANGE DEEP RECESS	7					
5	90340–14824	PLUG, STRAIGHT SCREW	1					
6	93210–14899	O-RING	1					
7	2ND–E5113–00	PLATE	1					
8	BAX–E5418–10	COVER, CHAIN CASE	1					
9	95E32–06016	BOLT, FLANGE DEEP RECESS	2					
10	BAX–E5421–00	COVER, CRANKCASE 2	1					
11	BAX–E5461–00	GASKET, CRANKCASE COVER 2	1					
12	91810–14808	PIN, DOWEL	2					
13	95E32–06040	BOLT, FLANGE DEEP RECESS	4					
14	95E32–06050	BOLT, FLANGE DEEP RECESS	6					
15	BAX–E5362–00	PLUG, OIL LEVEL	1					
16	93210–19809	O-RING	1					
17	93101–10843	OIL SEAL	1					
18	95E32–06090	BOLT, FLANGE DEEP RECESS	1					

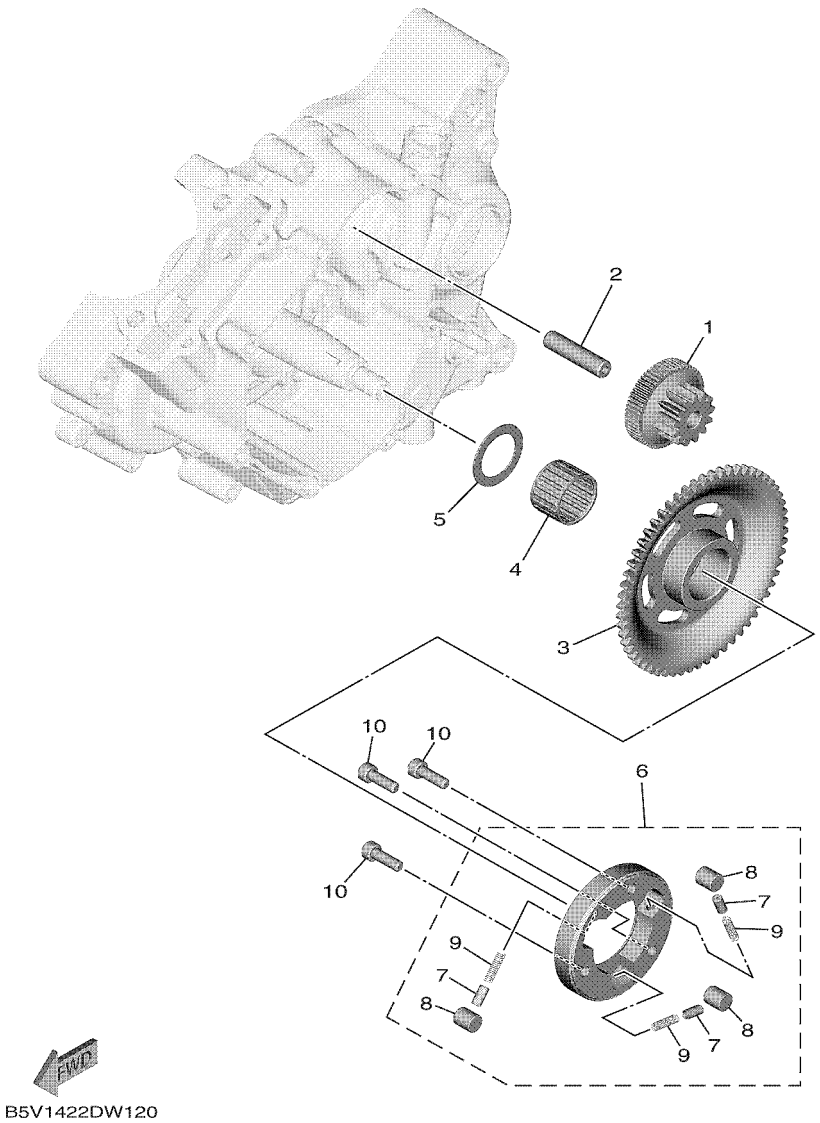

FIG. 12 STARTER CLUTCH

REF. NO.	PART NO.	DESCRIPTION	BAX1					REMARKS
1	B17–E5514–00	GEAR 2	1					
2	1S8–E5521–00	SHAFT 1	1					
3	2ND–E5524–01	WHEEL, STARTER	1					
4	93310–325YC	BEARING	1					
5	90201–25290	WASHER, PLATE	1					
6	2PV–E5580–00	STARTER CLUTCH OUTER ASSY	1					
7	2PH–E5583–10	.CAP, STARTER CLUTCH SPRING	3					
8	1ST–E5614–00	.PIN, DOWEL	3					
9	2PV–E5572–00	.SPRING, RETURN	3					
10	90110–06873	BOLT, HEXAGON SOCKET HEAD	3					

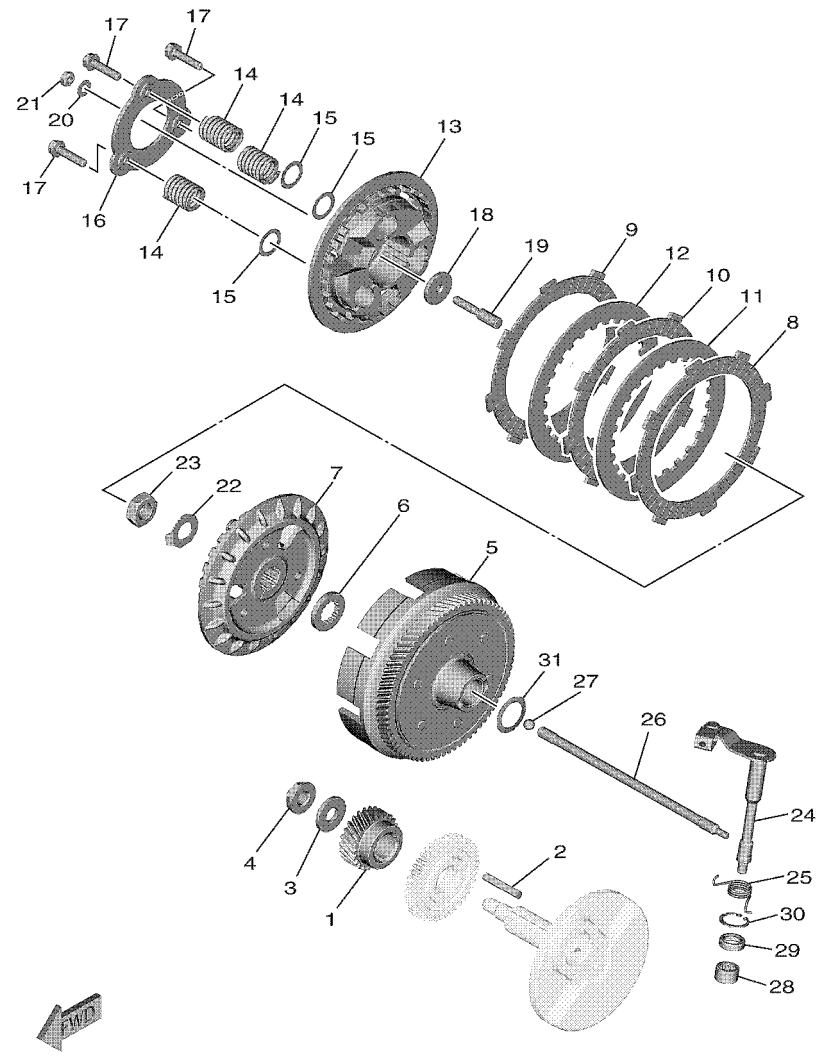

B5V1422DW130

FIG. 13 CLUTCH

REF. NO.	PART NO.	DESCRIPTION	BAX1					REMARKS
1	2ND–E6111–00	GEAR, PRIMARY DRIVE	1					UR
	2ND–E6111–10	GEAR, PRIMARY DRIVE	1					UR
2	55P–E6193–00	KEY, FEATHER	1					
3	90201–12019	WASHER, PLATE	1					
4	B5V–E6647–00	NUT	1					
5	B5V–E6150–00	PRIMARY DRIVEN GEAR COMP.	1					
6	2ND–E6154–00	PLATE, THRUST 1	1					
7	B5V–E6371–00	BOSS, CLUTCH	1					
8	2ND–E6321–00	PLATE, FRICTION	1					
9	B5V–E6331–00	PLATE, FRICTION 2	1					
10	B5V–E6321–00	PLATE, FRICTION	1					
11	B5V–E6325–00	PLATE, CLUTCH 2	1					
12	B5V–E6324–00	PLATE, CLUTCH 1	1					
13	B5V–E6351–00	PLATE, PRESSURE 1	1					
14	BK6–E6333–00	SPRING, CLUTCH 1	3					
15	BK6–E6774–00	WASHER	3					
16	B5V–E6352–00	PLATE, PRESSURE 2	1					
17	B5V–E6337–00	SCREW, SPRING	3					
18	B5V–E6358–00	PLATE, PUSH	1					
19	B5V–E6356–00	ROD, PUSH 1	1					
20	2ND–E6144–00	WASHER	1					
21	2ND–E6344–00	NUT, ADJUSTING	1					
22	90215–14802	WASHER, LOCK	1					
23	90170–14801	NUT	1					
24	B5V–E6380–00	PUSH LEVER ASSY	1					
25	B5V–E6345–00	SPRING, RETURN	1					
26	2ND–E6357–00	ROD, PUSH 2	1					

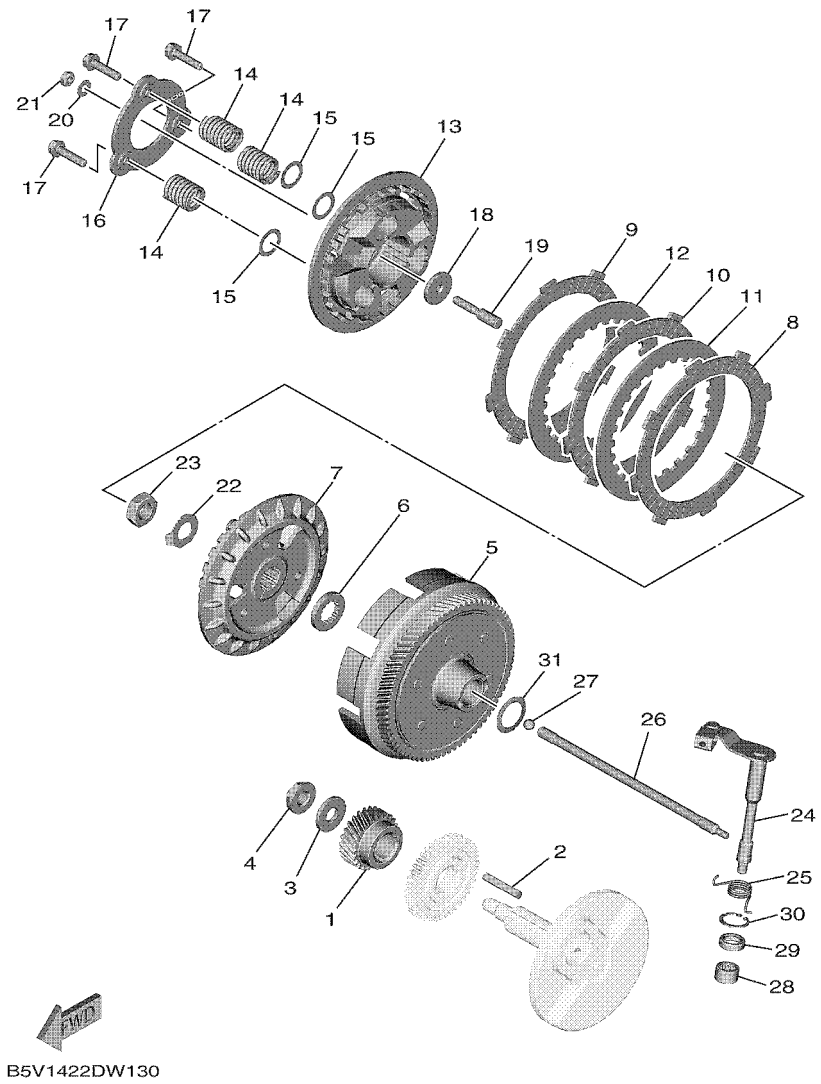

FIG. 13 CLUTCH

REF. NO.	PART NO.	DESCRIPTION	BAX1					REMARKS
27	93505–16844	BALL	1					
28	93315–112Y9	BEARING	1					
29	93102–12810	OIL SEAL	1					
30	99009–20500	CIRCLIP	1					
31	90208–20003	WASHER, CONICAL SPRING	1					

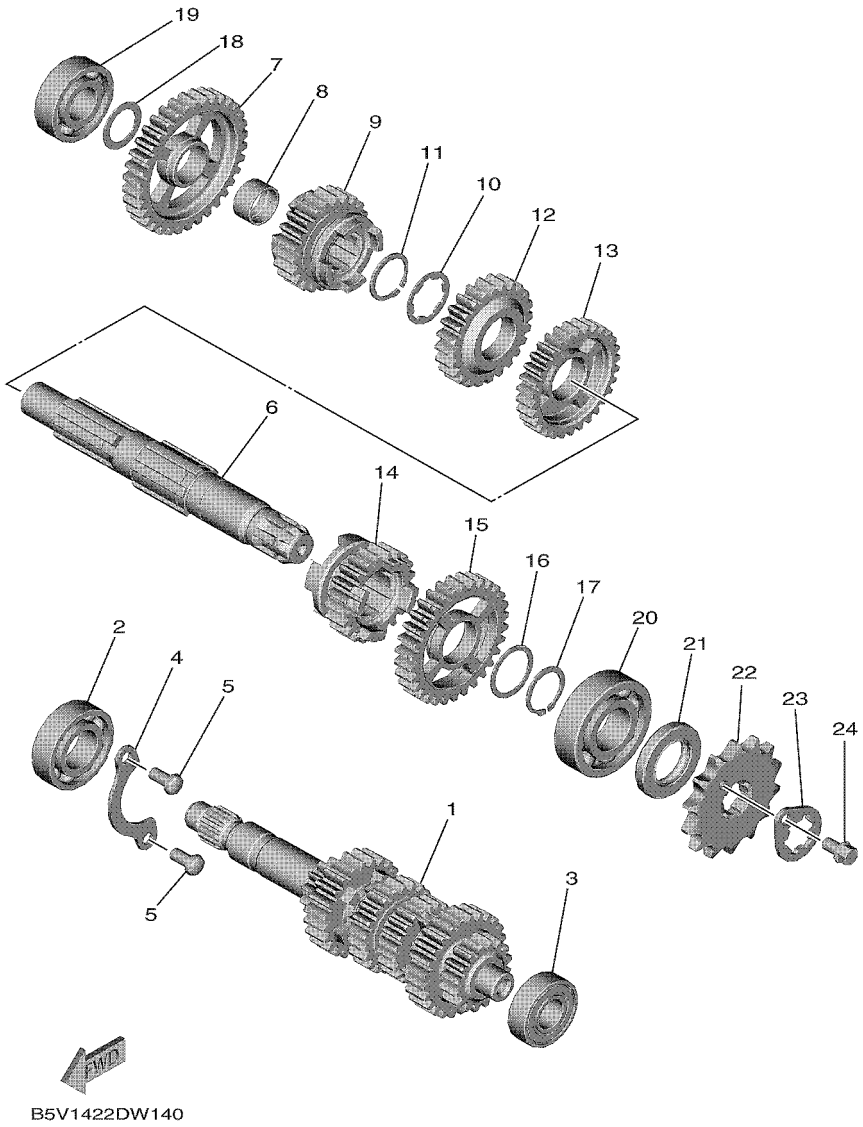

FIG. 14 TRANSMISSION

REF. NO.	PART NO.	DESCRIPTION	BAX1					REMARKS
1	B5V–E7410–00	MAIN AXLE COMP.	1					
2	93306–054XF	BEARING	1					
3	933A6–202X0	BEARING	1					
4	16S–E7471–00	PLATE, COVER	1					
5	98512–06012	SCREW, PAN HEAD	2					
6	B5V–E7421–00	AXLE, DRIVE	1					
7	55P–E7211–00	GEAR, 1ST WHEEL (34T)	1					
8	90387–17804	COLLAR	1					
9	B5V–E7251–00	GEAR, 5TH WHEEL (22T)	1					
10	90209–18208	WASHER	1					
11	93410–22039	CIRCLIP	1					
12	B5V–E7241–00	GEAR, 4TH WHEEL (24T)	1					
13	B5V–E7231–00	GEAR, 3RD WHEEL (30T)	1					
14	B5V–E7261–00	GEAR, 6TH WHEEL (21T)	1					
15	B5V–E7221–00	GEAR, 2ND WHEEL (30T)	1					
16	90201–22793	WASHER, PLATE	1					
17	93410–22039	CIRCLIP	1					
18	90201–173F4	WASHER, PLATE	1					
19	93306–203XR	BEARING	1					
20	93306–272YC	BEARING	1					
21	93102–22827	OIL SEAL	1					
22	93822–14800	SPROCKET, DRIVE (14T)	1					
23	1S8–E7456–00	HOLDER, SPROCKET	1					
24	95E32–06010	BOLT, FLANGE DEEP RECESS	1					

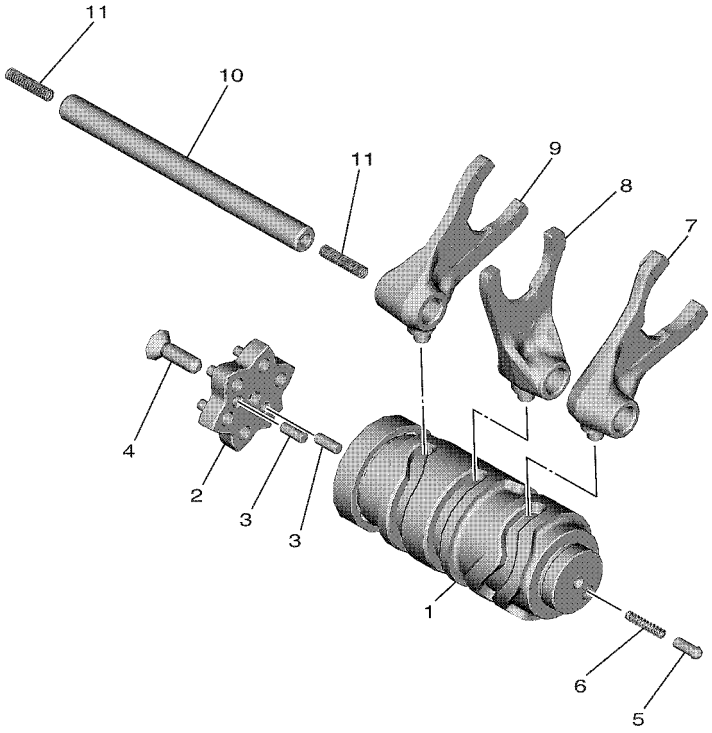

B5V1422DW150

FIG. 15 SHIFT CAM & FORK

REF. NO.	PART NO.	DESCRIPTION	BAX1					REMARKS
1	B5V–E8540–00	SHIFT CAM ASSY	1					
2	BK7–E8185–00	SEGMENT	1					
3	93604–10011	PIN, DOWEL	2					
4	90151–06818	SCREW, COUNTERSUNK	1					
5	3S4–E8542–00	POINT, NEUTRAL	1					
6	90501–06022	SPRING, COMPRESSION	1					
7	2ND–E8511–00	FORK, SHIFT 1	1					
8	2ND–E8512–00	FORK, SHIFT 2	1					
9	2ND–E8513–00	FORK, SHIFT 3	1					
10	2ND–E8531–00	BAR, SHIFT FORK GUIDE 1	1					
11	90501–06800	SPRING, COMPRESSION	2					

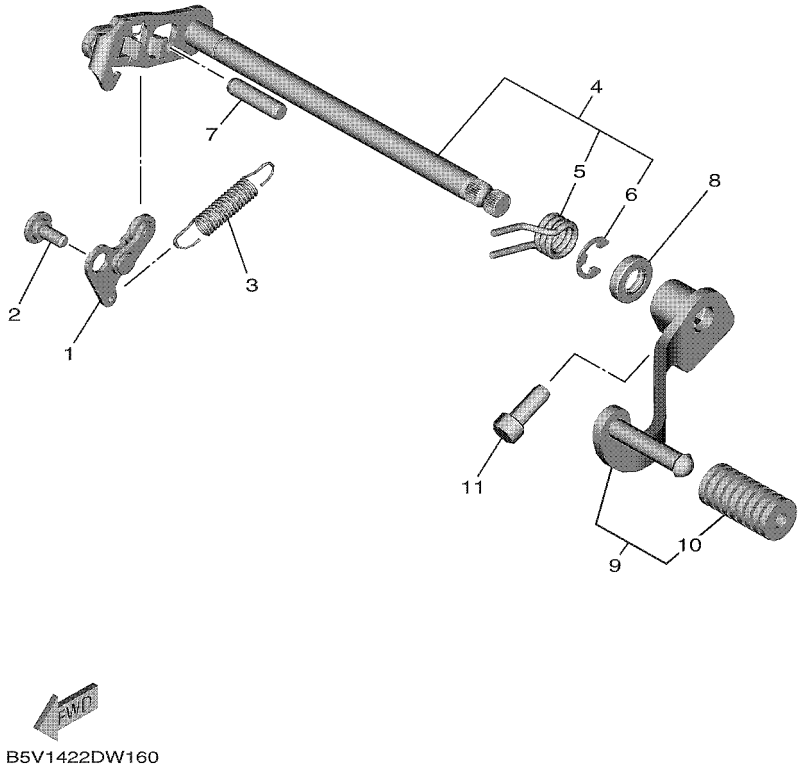

FIG. 16 SHIFT SHAFT

REF. NO.	PART NO.	DESCRIPTION	BAX1					REMARKS
1	B5V–E8140–00	STOPPER LEVER ASSY	1					
2	90109–06279	BOLT	1					
3	B5V–E8337–00	SPRING	1					
4	B5V–E8101–00	SHIFT SHAFT ASSY	1					
5	90508–32837	.SPRING, TORSION	1					
6	99002–10600	.CIRCLIP	1					
7	93608–30839	PIN, DOWEL	1					
8	93102–12808	OIL SEAL	1					
9	BAX–E8110–00	SHIFT PEDAL ASSY	1					
10	5HU–E8113–00	.COVER, SHIFT PEDAL	1					
11	91312–08020	BOLT, HEXAGON SOCKET HEAD	1					

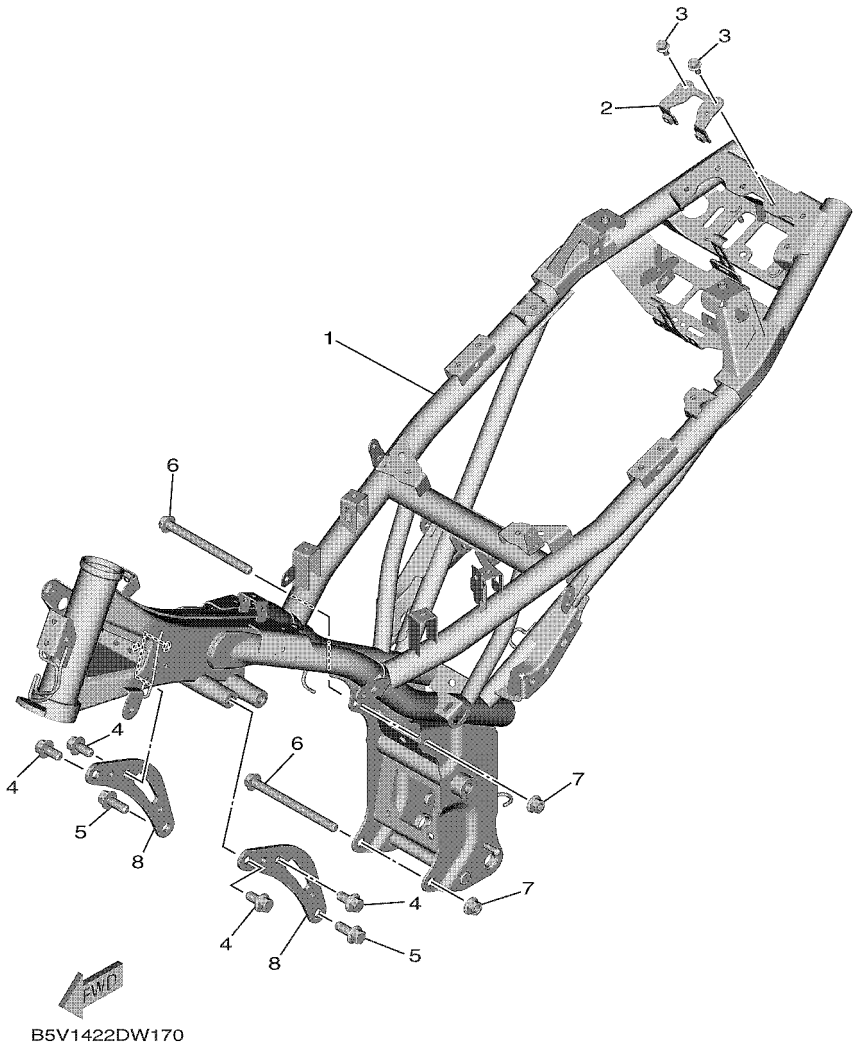

FIG. 17 FRAME

REF. NO.	PART NO.	DESCRIPTION	BAX1					REMARKS
1	BAX–F1110–00	FRAME COMP.	1					
2	BAX–F478X–00	BRACKET, SEAT LOCK	1					
3	95D02–06012	BOLT, FLANGE DEEP RECESS	2					
4	95812–10020	BOLT, FLANGE	4					
5	95817–10025	BOLT, FLANGE	2					
6	90105–108B4	BOLT, FLANGE	2					
7	90179–10805	NUT	2					
8	B5V–F1315–00	STAY, ENGINE 1	2					

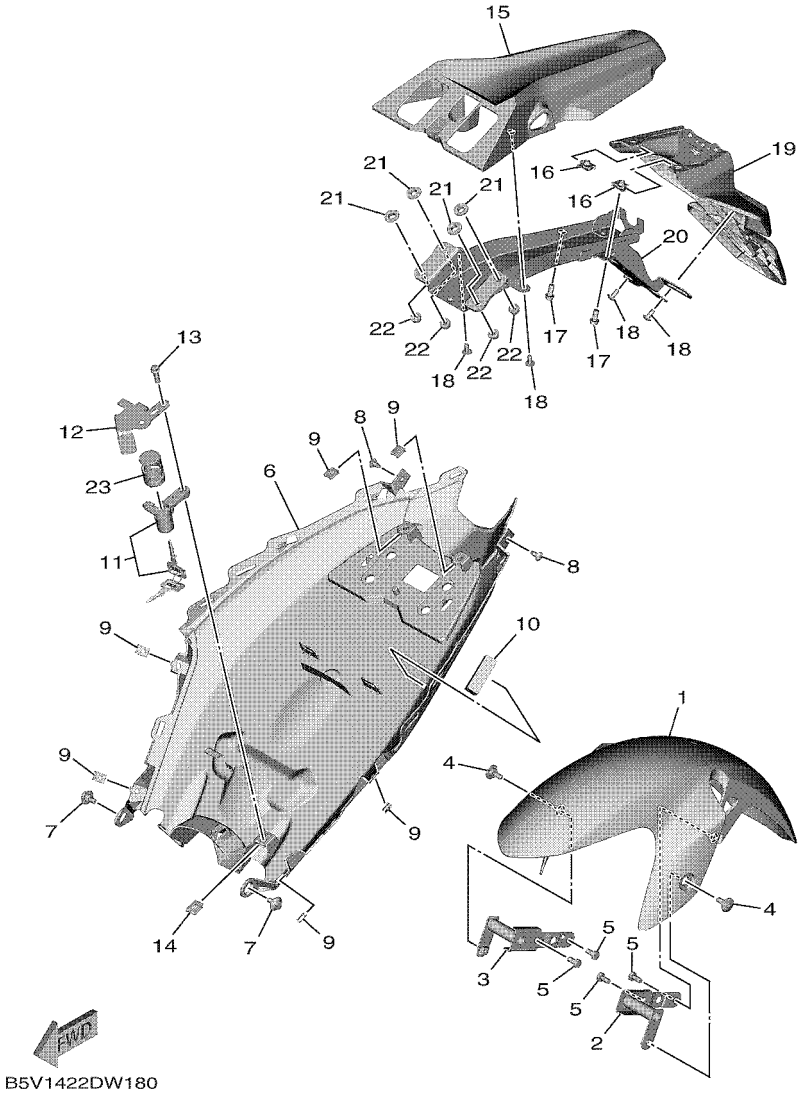

FIG. 18 FENDER

REF. NO.	PART NO.	DESCRIPTION	BAX1					REMARKS
1	B17–F1511–10–P1	FENDER, FRONT	1					UR FOR VPBC5
	B17–F1511–10–P4	FENDER, FRONT	1					UR FOR RYC1
	B17–F1511–10–P5	FENDER, FRONT	1					UR FOR MS1
2	B17–F1513–00	STAY, FENDER 1	1					
3	B17–F1514–00	STAY, FENDER 2	1					
4	90109–068A4	BOLT	2					
5	97022–06012	BOLT, HEXAGON	4					
6	BAX–F1611–00	FENDER, REAR	1					
7	90109–06202	BOLT	2					
8	97707–50012	SCREW, TRUSS HEAD TAPPING	2					
9	90183–05807	NUT, SPRING	6					
10	90520–15013	DAMPER, PLATE	1					
11	B5V–F465E–00	ROTOR COMP.	1					
12	BAX–F117K–00	STAY, LOCK	1					
13	95022–06020	BOLT, FLANGE	1					
14	90183–06800	NUT, SPRING	1					
15	BAX–F1629–00	GUARD, MUD	1					
16	90183–06800	NUT, SPRING	2					
17	95022–06014	BOLT, FLANGE	2					
18	90160–05018	SCREW, ROUND TAPPING	4					
19	BAX–F2328–00	MUD GUARD 2	1					
20	BAX–F164F–00	STAY 1	1					
21	90387–08850	COLLAR	4					
22	95602–06200	NUT, SELF-LOCKING	4					
23	BAX–F482H–00	CAP	1					

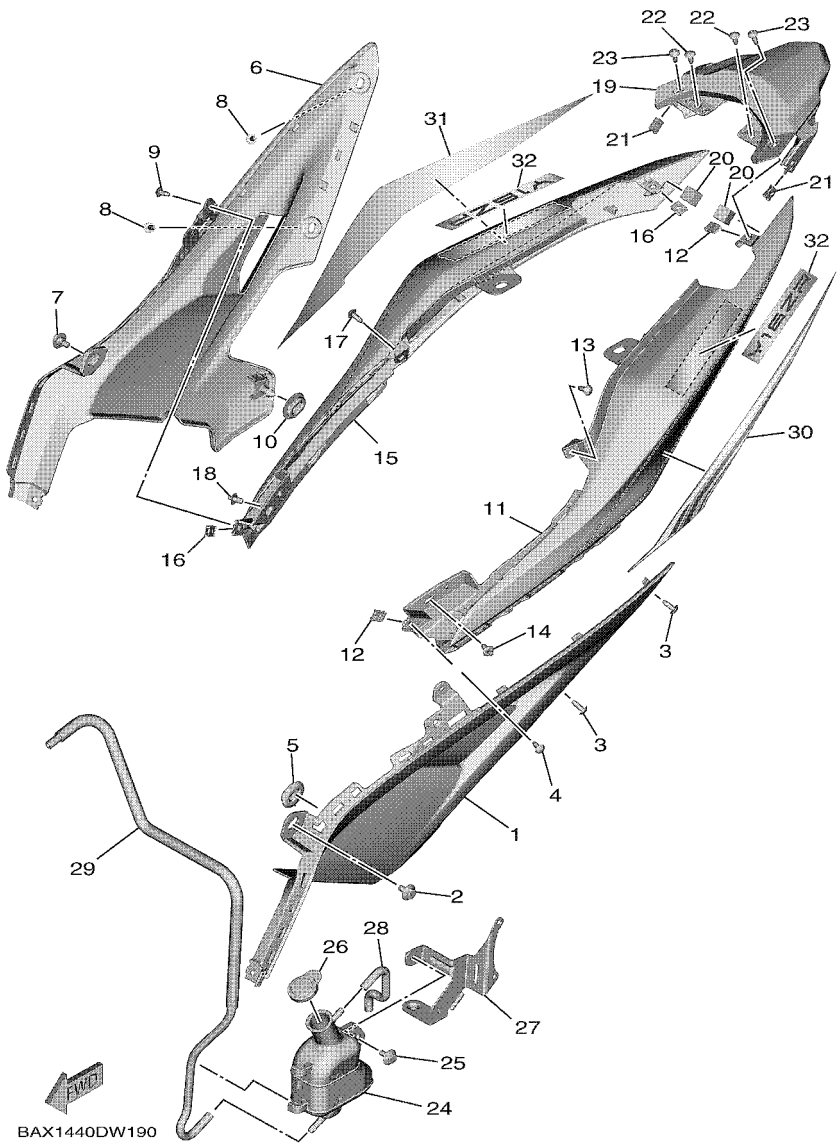

FIG. 19 SIDE COVER

REF. NO.	PART NO.	DESCRIPTION	BAX1					REMARKS
1	BAX–F1711–00	COVER, SIDE 1	1					
2	90109–06202	BOLT	1					
3	90160–05009	SCREW, ROUND TAPPING	2					
4	97707–50012	SCREW, TRUSS HEAD TAPPING	1					
5	90480–01821	GROMMET	1					
6	BAX–F1721–00	COVER, SIDE 2	1					
7	90109–06202	BOLT	1					
8	90160–05009	SCREW, ROUND TAPPING	2					
9	97707–50012	SCREW, TRUSS HEAD TAPPING	1					
10	90480–01821	GROMMET	1					
11	BAX–F1731–00–P0	COVER, SIDE 3	1					UR SMX FOR VPBC5
	BAX–F1731–00–P1	COVER, SIDE 3	1					UR MNM3 FOR RYC1
	BAX–F1731–00–P2	COVER, SIDE 3	1					UR DBNM8 FOR MS1
12	90183–05807	NUT, SPRING	2					
13	90160–05009	SCREW, ROUND TAPPING	1					
14	90269–06816	RIVET	1					
15	BAX–F1741–00–P0	COVER, SIDE 4	1					UR SMX FOR VPBC5
	BAX–F1741–00–P1	COVER, SIDE 4	1					UR MNM3 FOR RYC1
	BAX–F1741–00–P2	COVER, SIDE 4	1					UR DBNM8 FOR MS1
16	90183–05807	NUT, SPRING	2					
17	90160–05009	SCREW, ROUND TAPPING	1					
18	90269–06816	RIVET	1					
19	BAX–F171E–00	COVER, SIDE 5	1					
20	90520–15012	DAMPER, PLATE	2					
21	90183–05807	NUT, SPRING	2					
22	97707–50012	SCREW, TRUSS HEAD TAPPING	2					
23	90160–05009	SCREW, ROUND TAPPING	2					

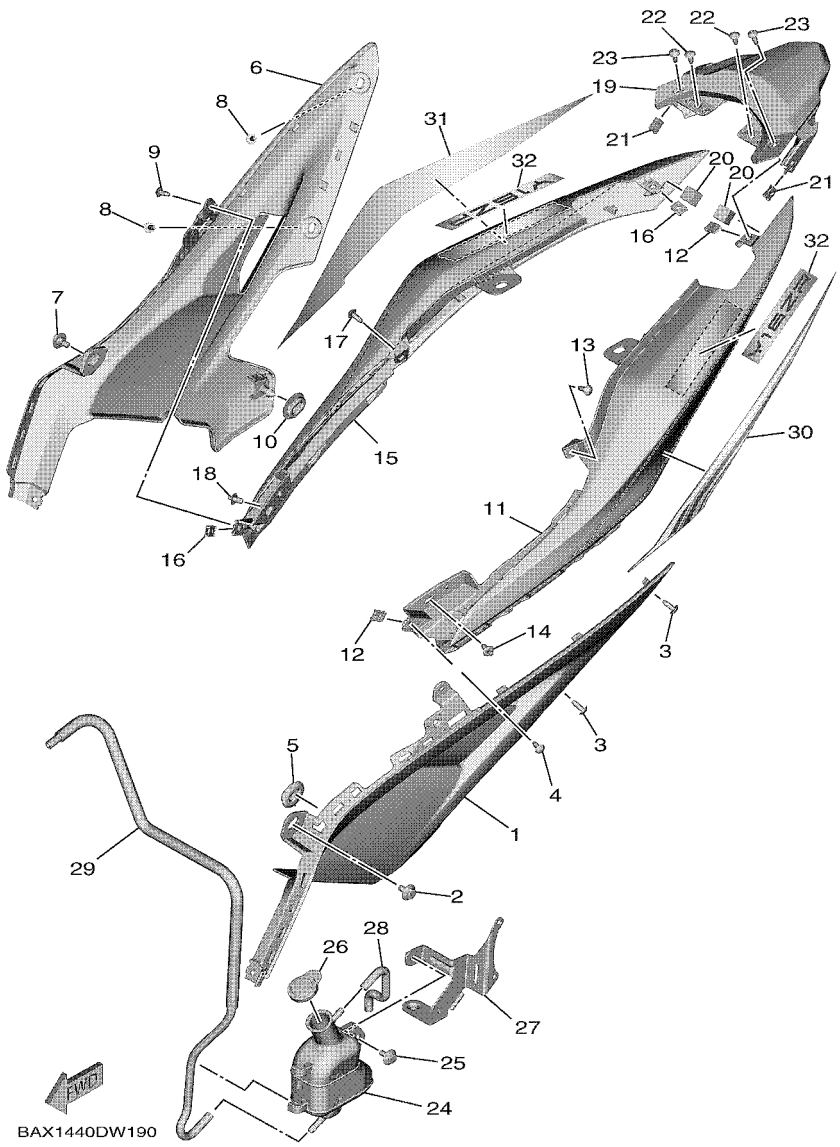

FIG. 19 SIDE COVER

REF. NO.	PART NO.	DESCRIPTION	BAX1					REMARKS
24	B5V–F1871–00	TANK, RECOVERY	1					
25	90109–068B4	BOLT	1					
26	1S9–F1875–00	CAP	1					
27	BAX–F172L–00	BRACKET 2	1					
28	BAX–F1816–00	PIPE 1	1					
29	BAX–F1817–00	PIPE 2	1					
30	BAX–F173E–00	GRAPHIC 1	1					UR FOR VPBC5
	BAX–F173E–10	GRAPHIC 1	1					UR FOR RYC1
	BAX–F173E–20	GRAPHIC 1	1					UR FOR MS1
31	BAX–F173F–00	GRAPHIC 2	1					UR FOR VPBC5
	BAX–F173F–10	GRAPHIC 2	1					UR FOR RYC1
	BAX–F173F–20	GRAPHIC 2	1					UR FOR MS1
32	BAX–F174G–00	GRAPHIC 3	2					UR FOR VPBC5
	BAX–F174G–10	GRAPHIC 3	2					UR FOR RYC1
	BAX–F174G–20	GRAPHIC 3	2					UR FOR MS1

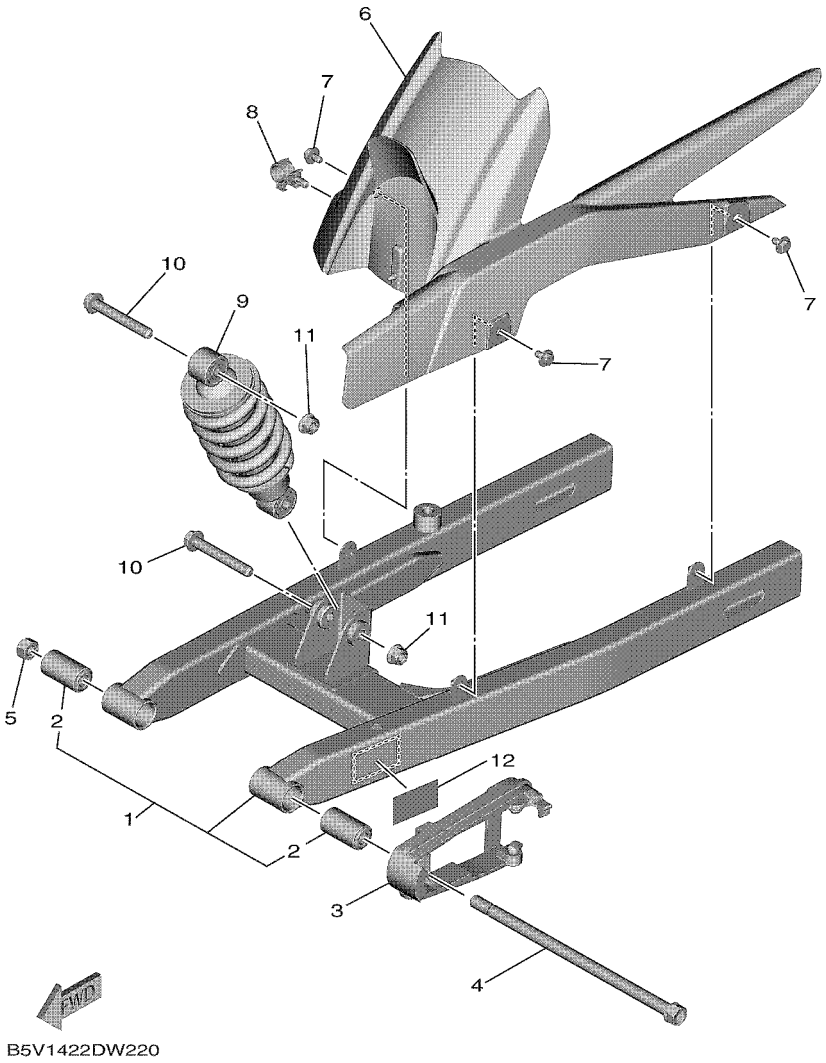

FIG. 20 REAR ARM & SUSPENSION

REF. NO.	PART NO.	DESCRIPTION	BAX1					REMARKS
1	BAX–F2100–00	REAR ARM ASSY	1					
2	5B9–F2123–00	.BUSH 1	2					
3	B17–F2151–10	SEAL, GUARD	1					
4	4NP–F5381–00	AXLE, WHEEL	1					
5	95614–12100	NUT, U	1					
6	B17–F1650–00	REAR FENDER COMP.	1					
7	90119–06155	BOLT, WITH WASHER	3					
8	90464–16012	CLAMP	1					
9	B17–F2210–30	SHOCK ABSORBER ASSY, REAR	1					
10	90105–108B8	BOLT, FLANGE	2					
11	95602–10200	NUT, S/L FLANGE	2					
12	B17–F1668–10	LABEL, TIRE	1					

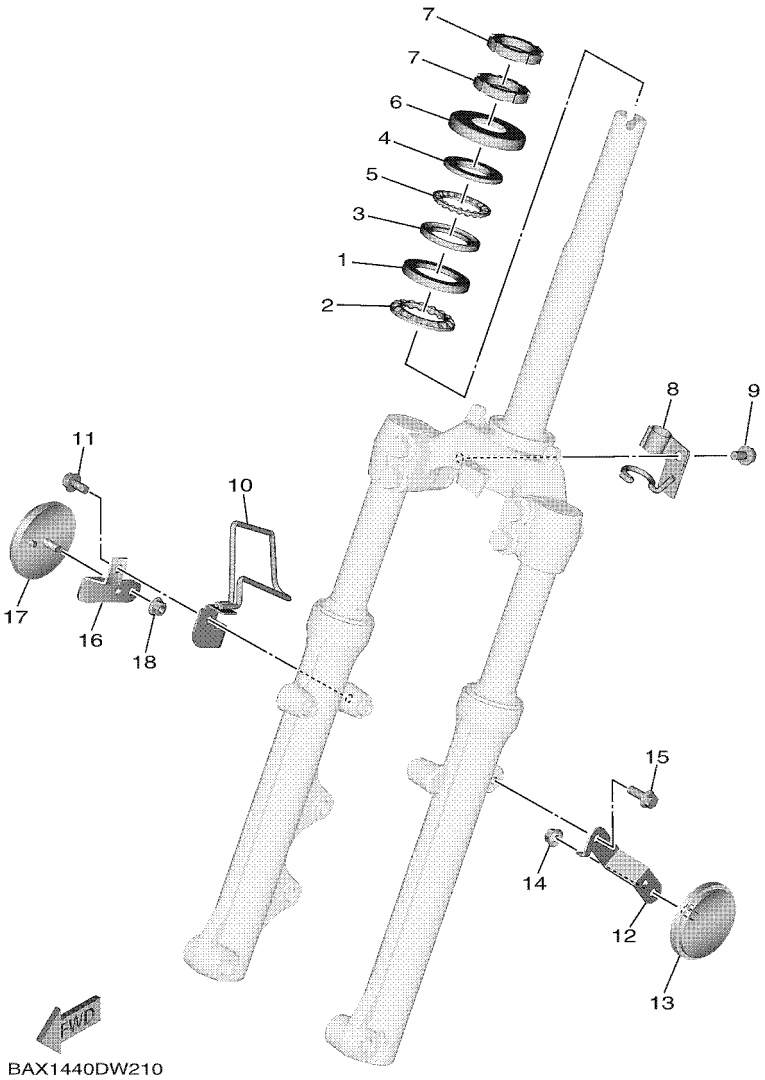

FIG. 21 STEERING

REF. NO.	PART NO.	DESCRIPTION	BAX1					REMARKS
1	1KL–F3412–10	RACE, BALL 2	1					
2	5VL–F341E–10	RETAINER, BALL BEARING	1					
3	4RT–F3412–10	RACE, BALL 2	1					
4	4RT–F3411–10	RACE, BALL 1	1					
5	1P6–F341E–10	RETAINER, BALL BEARING	1					
6	5P1–F3416–00	COVER, BALL RACE 2	1					
7	90179–25002	NUT	2					
8	B5V–F587A–00	HOLDER, BRAKE HOSE 4	1					
9	95D02–06012	BOLT, FLANGE DEEP RECESS	1					
10	B17–F5876–00	HOLDER, BRAKE HOSE 2	1					
11	95D02–06012	BOLT, FLANGE DEEP RECESS	1					
12	B17–F113J–00	BRACKET, REFLECTOR 1	1					
13	2FC–H5111–00	REFLECTOR, 1	1					
14	90185–05803	NUT, SELF-LOCKING	1					
15	95D02–06012	BOLT, FLANGE DEEP RECESS	1					
16	B17–F113K–00	BRACKET, REFLECTOR 2	1					
17	2FC–H5111–00	REFLECTOR, 1	1					
18	90185–05803	NUT, SELF-LOCKING	1					

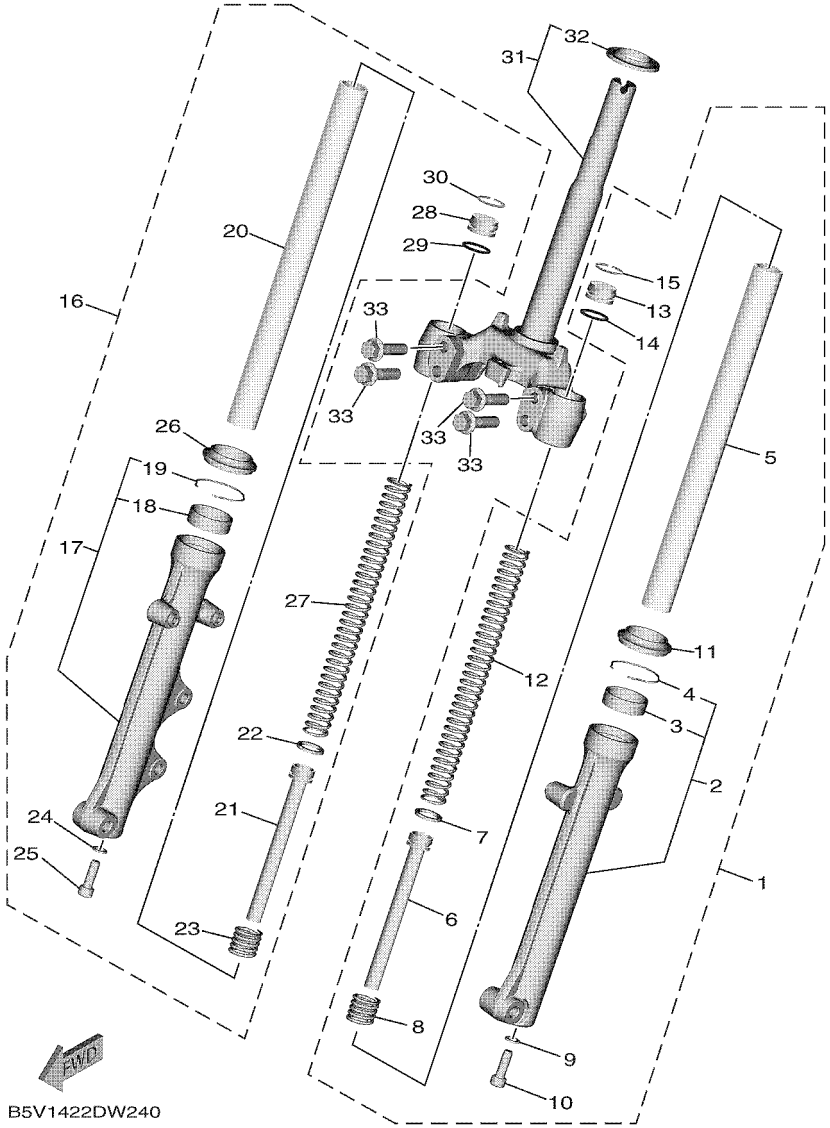

FIG. 22 FRONT FORK

REF. NO.	PART NO.	DESCRIPTION	BAX1					REMARKS
1	BAX–F3102–00	FRONT FORK ASSY (L.H)	1					
2	B17–F3126–00	.TUBE, OUTER (L.H)	1					
3	4UV–F3145–00	..OIL SEAL	1					
4	5P0–F3156–00	..RING, SNAP	1					
5	BAX–F3110–00	.INNER TUBE COMP.1	1					
6	BAX–F3170–00	.CYLINDER COMP., FRONT FORK	1					
7	BAX–F3157–00	.RING, PISTON	1					
8	5TF–F3152–00	.SPRING, SUB	1					
9	509–F3158–L0	.GASKET	1					
10	31D–F3181–50	.BOLT, HEXAGON SOCKET HEAD	1					
11	5LL–F3144–00	.SEAL, DUST	1					
12	BAX–F3141–00	.SPRING, FRONT FORK	1					
13	BAX–F3111–00	.BOLT, CAP	1					
14	2JG–F3147–00	.O-RING	1					
15	31D–F3153–00	.RING, SNAP	1					
16	BAX–F3103–00	FRONT FORK ASSY (R.H)	1					
17	BAX–F3136–00	.TUBE, OUTER 2	1					
18	4UV–F3145–00	..OIL SEAL	1					
19	5P0–F3156–00	..RING, SNAP	1					
20	BAX–F3110–00	.INNER TUBE COMP.1	1					
21	BAX–F3170–00	.CYLINDER COMP., FRONT FORK	1					
22	BAX–F3157–00	.RING, PISTON	1					
23	5TF–F3152–00	.SPRING, SUB	1					
24	509–F3158–L0	.GASKET	1					
25	31D–F3181–50	.BOLT, HEXAGON SOCKET HEAD	1					
26	5LL–F3144–00	.SEAL, DUST	1					
27	BAX–F3141–00	.SPRING, FRONT FORK	1					

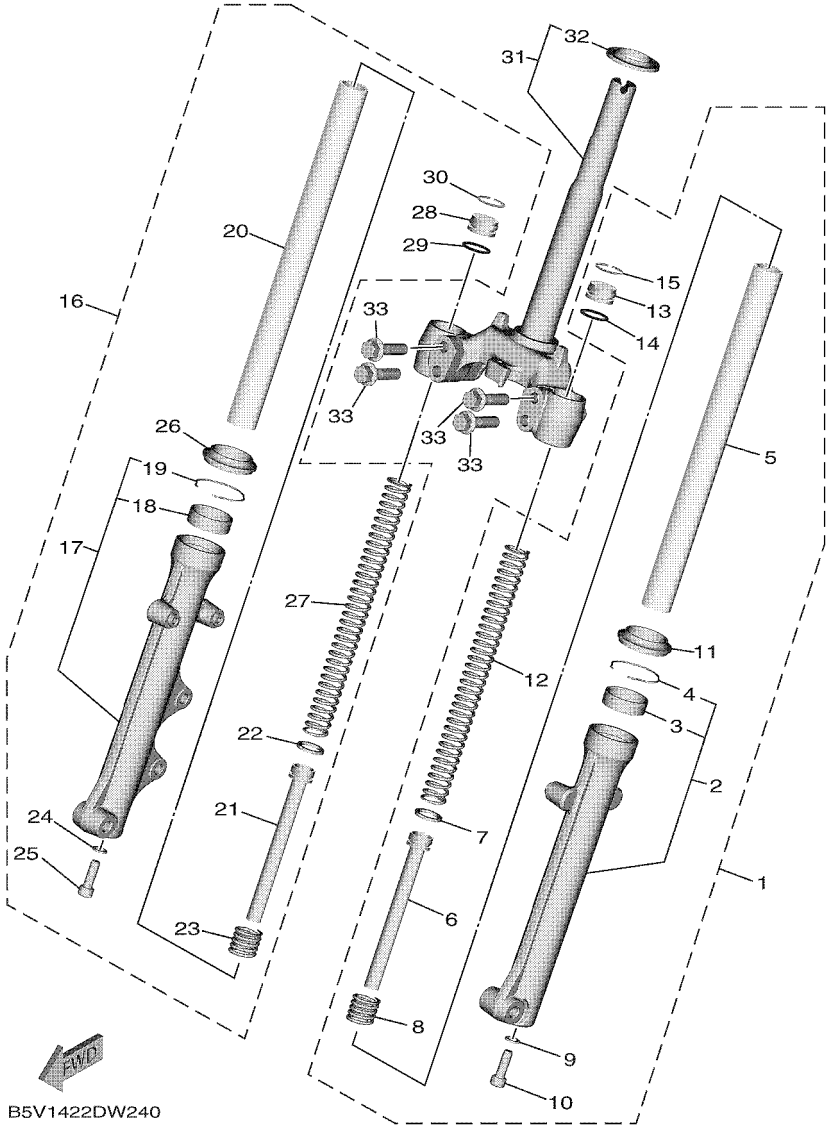

FIG. 22 FRONT FORK

REF. NO.	PART NO.	DESCRIPTION	BAX1					REMARKS
28	BAX–F3111–00	.BOLT, CAP	1					
29	2JG–F3147–00	.O-RING	1					
30	31D–F3153–00	.RING, SNAP	1					
31	BAX–F3340–00	UNDER BRACKET COMP.	1					
32	4FP–F3411–10	.RACE, BALL 1	1					
33	31D–F3346–00	BOLT 1	4					

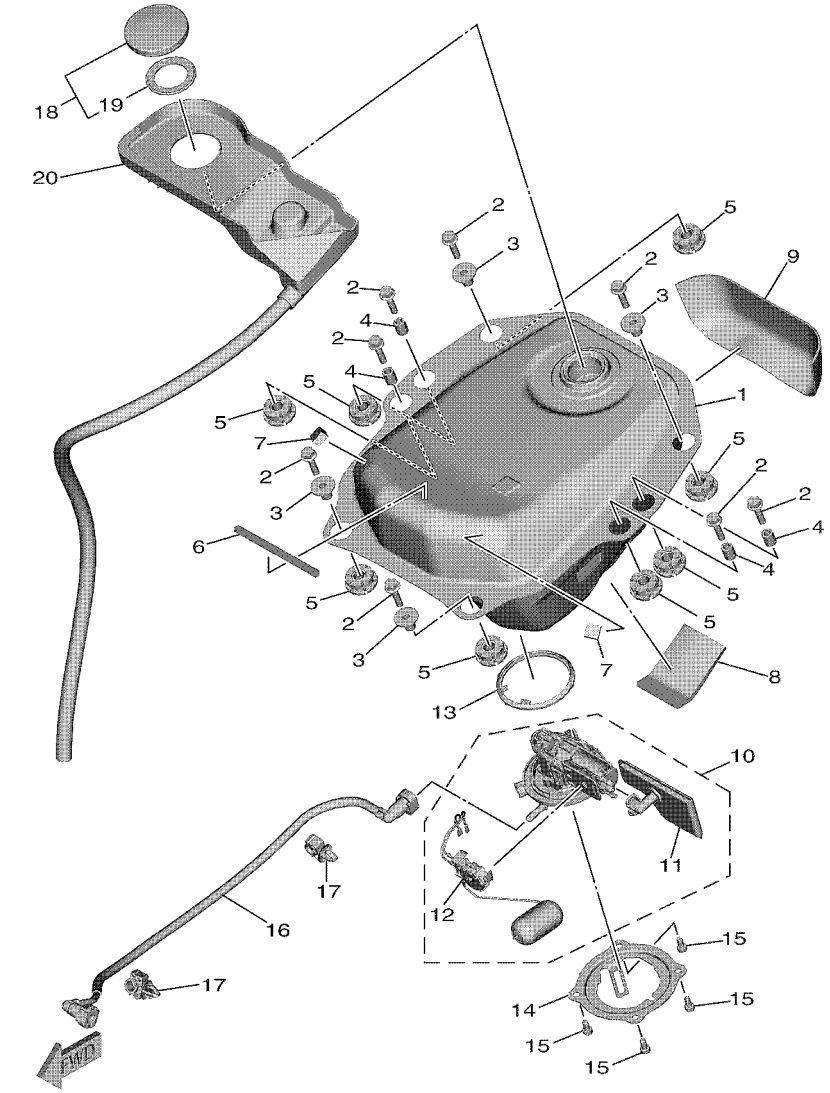

BAX1440DW230

FIG. 23 FUEL TANK

REF. NO.	PART NO.	DESCRIPTION	BAX1					REMARKS
1	BAX–F4110–00	FUEL TANK COMP.	1					
2	95D32–06025	BOLT, FLANGE DEEP RECESS	8					
3	1FC–F412G–00	COLLAR	4					
4	90560–07007	SPACER	4					
5	1FC–F4339–00	GROMMET	8					
6	90520–05028	DAMPER, PLATE	1					
7	90520–08007	DAMPER, PLATE	2					
8	1S8–F8372–00	DAMPER	1					
9	90520–02859	DAMPER, PLATE	1					
10	B5V–E3907–00	FUEL PUMP COMP.	1					
11	54P–E3915–00	.FILTER, FUEL SUCTION	1					
12	B5V–H5752–00	.SENDER UNIT ASSY, FUEL METER	1					
13	1DB–F414G–01	SEAL	1					
14	BAX–F4491–00	BRACKET, FUEL PUMP	1					
15	91332–05010	BOLT	4					
16	B5V–E3971–00	PIPE, FUEL 1	1					
17	90464–10008	CLAMP	2					
18	4YY–F4610–00	CAP ASSY	1					
19	4YY–F4612–00	.PACKING, CAP	1					
20	BAX–F41B1–00	COVER, TANK	1					

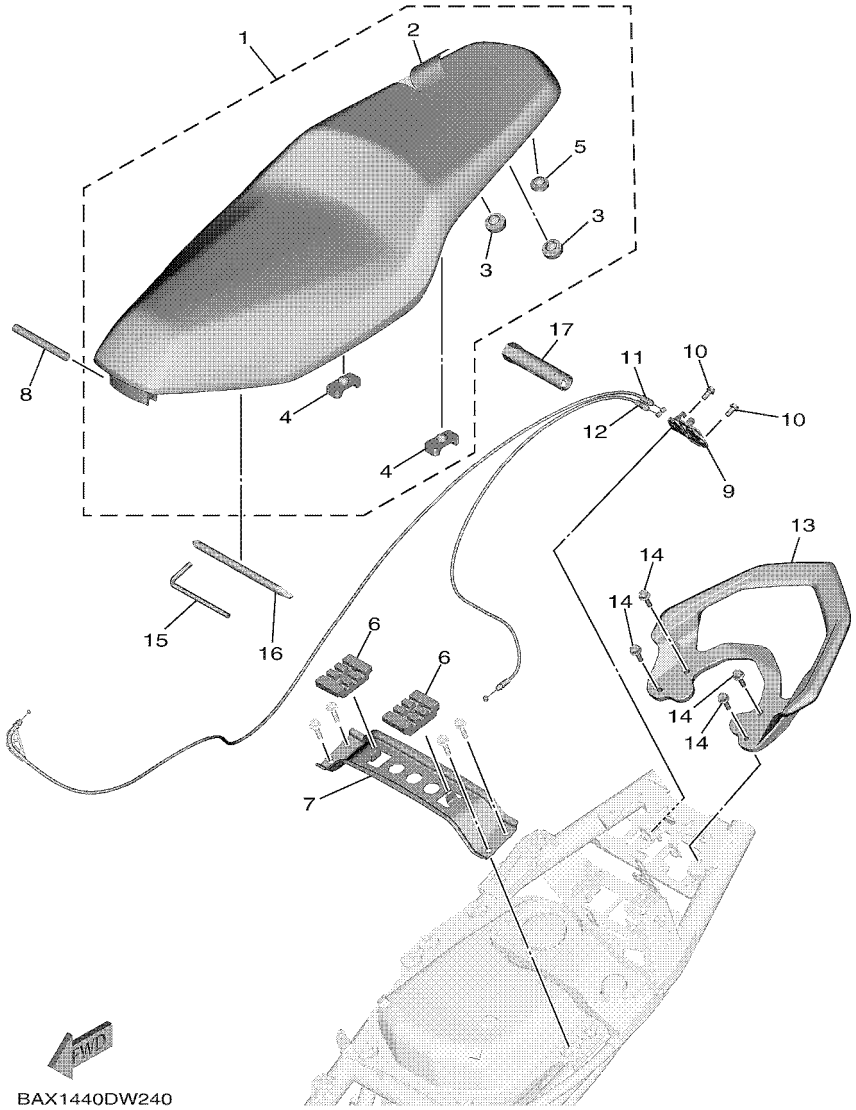

FIG. 24 SEAT

REF. NO.	PART NO.	DESCRIPTION	BAX1					REMARKS
1	BAX–F4730–10	DOUBLE SEAT ASSY	1					UR FOR VPBC5,MS1
	BAX–F4730–20	DOUBLE SEAT ASSY	1					UR FOR RYC1
2	BAX–F470F–10	.SEAT COVER COMP.	1					UR FOR VPBC5,MS1
	BAX–F470F–20	.SEAT COVER COMP.	1					UR FOR RYC1
3	1VP–F4741–10	.PAD, SEAT	2					
4	BAX–F4741–00	.PAD, SEAT	2					
5	BAX–F4741–10	.PAD, SEAT	1					
6	BAX–F4747–00	DAMPER, SEAT	2					
7	BAX–F471A–00	STAY, SEAT	1					
8	2WB–F4727–00	PIN, SEAT FITTING	1					
9	B5V–F4780–00	SEAT LOCK ASSY	1					
10	95022–06012	BOLT, FLANGE	2					
11	BAX–F478E–00	CABLE, SEAT LOCK	1					
12	B5V–F479D–00	WIRE, SEAT LOCK 2	1					
13	BAX–F4773–00–P0	HANDLE, SEAT	1					UR FOR VPBC5
	BAX–F4773–00–P4	HANDLE, SEAT	1					UR FOR RYC1
	BAX–F4773–00–P2	HANDLE, SEAT	1					UR FOR MS1
14	95D32–06020	BOLT, FLANGE DEEP RECESS	4					
15	B17–F816B–00	WRENCH, HEXAGON	1					
16	B17–F8152–00	DRIVER	1					
17	B17–F814F–00	BOX, SPARK PLUG	1					

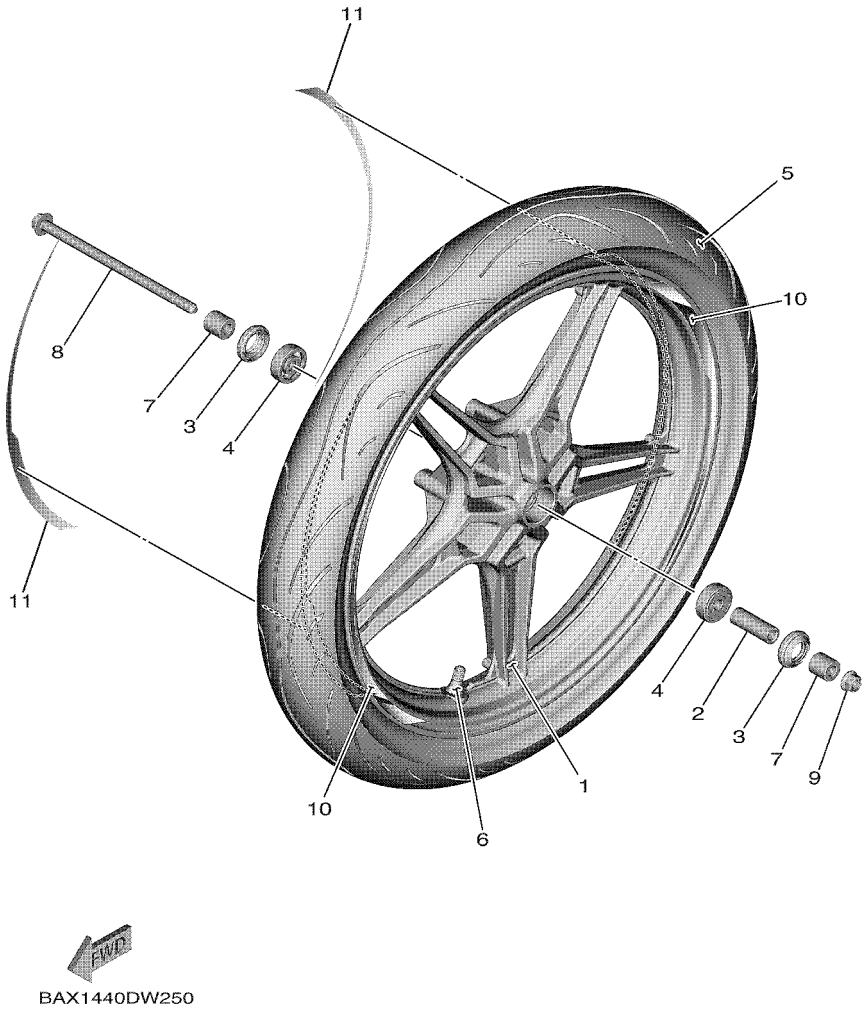

FIG. 25 FRONT WHEEL

REF. NO.	PART NO.	DESCRIPTION	BAX1					REMARKS
1	B17–F5168–10–33	CAST WHEEL, FRONT	1					YB
2	90560–10292	SPACER	1					
3	93106–20816	OIL SEAL	2					
4	93306–300YN	BEARING	2					
5	94109–17809	TIRE(90/80-17 M/C 46P DM1060F)	1					DURO
6	93900–00817	VALVE, RIM (TR412)	1					
7	90387–10277	COLLAR	2					
8	B6A–F5181–00	AXLE, WHEEL	1					
9	95602–10200	NUT, S/L FLANGE	1					
10	BAX–F51G1–00	GRAPHIC 1	2					UR FOR VPBC5
	BAX–F51G1–10	GRAPHIC 1	2					UR FOR RYC1
	BAX–F51G1–20	GRAPHIC 1	2					UR FOR MS1
11	BAX–F51G2–00	GRAPHIC 2	2					UR FOR VPBC5
	BAX–F51G2–10	GRAPHIC 2	2					UR FOR RYC1
	BAX–F51G2–20	GRAPHIC 2	2					UR FOR MS1

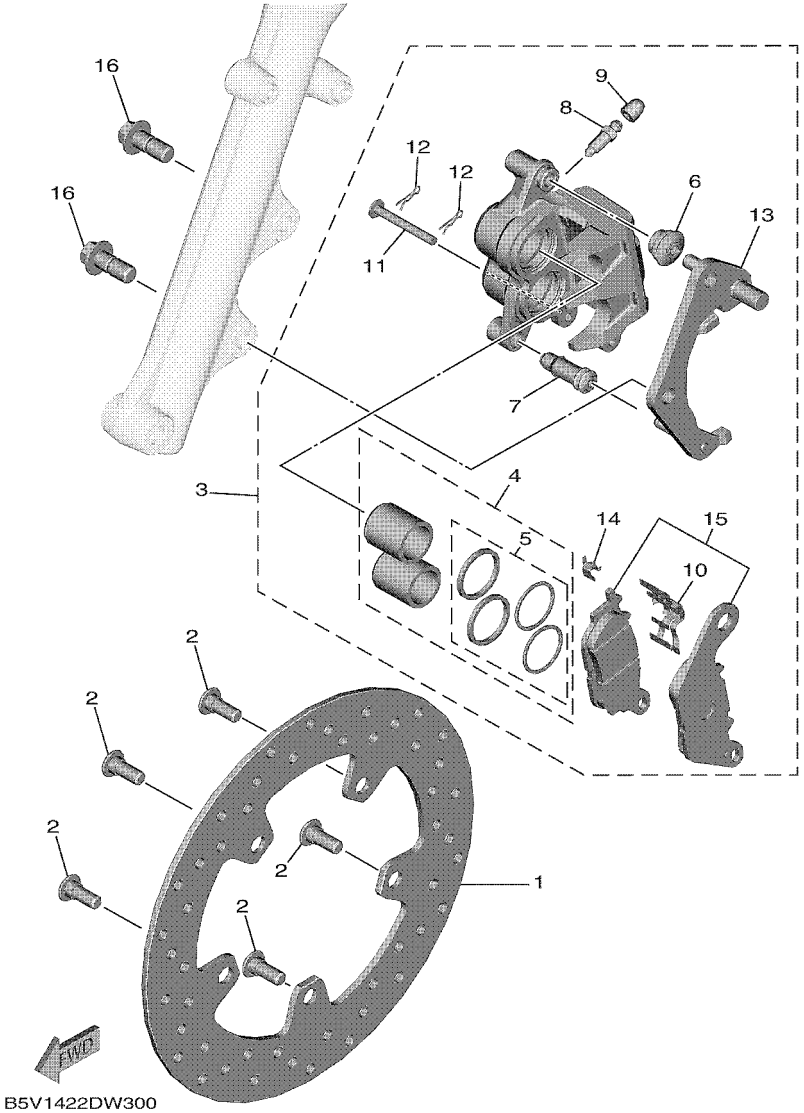

FIG. 26 FRONT BRAKE CALIPER

REF. NO.	PART NO.	DESCRIPTION	BAX1					REMARKS
1	B5V–F582U–01	DISK, BRAKE (RIGHT)	1					
2	90109–08087	BOLT	5					
3	B5V–F580U–00	CALIPER ASSY (RIGHT)	1					
4	3C1–F5802–00	.PISTON ASSY, CALIPER	1					
5	3C1–F5803–50	..CALIPER SEAL KIT	1					
6	5YP–F5917–00	.BOOT, CALIPER	1					
7	5YP–F5937–00	.BOOT 2	1					
8	47X–25824–01	.SCREW, BLEED	1					
9	2NL–F5825–00	.CAP	1					
10	5P0–F5919–01	.SUPPORT, PAD	1					
11	5YP–F5924–00	.PIN, PAD	1					
12	5YP–F5925–01	.CLIP	2					
13	1DB–F5921–01	.BRACKET, SUPPORT	1					
14	5YP–F5939–00	.CLIP, PAD	1					
15	B5V–F5805–00	.BRAKE PAD KIT	1					
16	90105–108A6	BOLT, FLANGE	2					

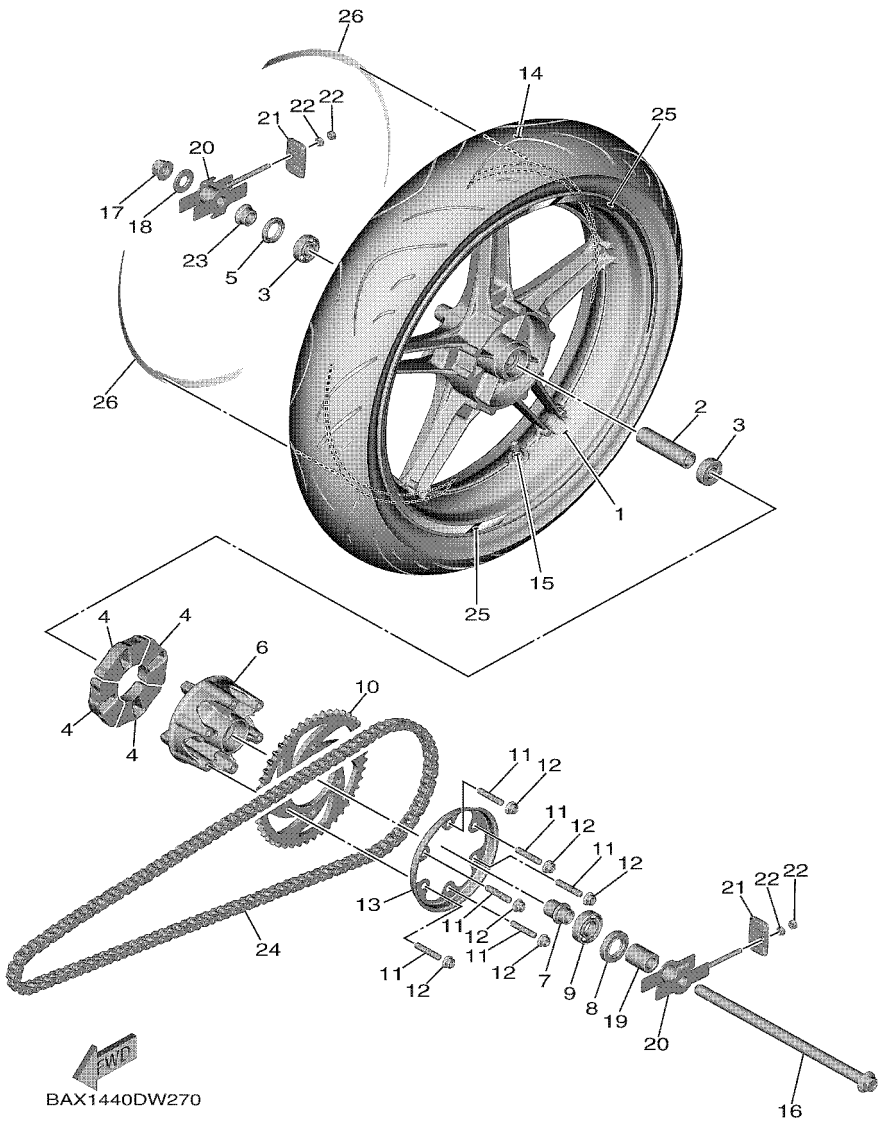

FIG. 27 REAR WHEEL

REF. NO.	PART NO.	DESCRIPTION	BAX1					REMARKS
1	B17–F5338–10–33	CAST WHEEL, REAR	1					YB
2	B17–F5317–00	SPACER, BEARING	1					
3	93306–252X7	BEARING	2					
4	B17–F5364–00	DAMPER	4					
5	93106–22808	OIL SEAL	1					
6	B17–F5366–00	CLUTCH, HUB	1					
7	B17–F5377–00	COLLAR, WHEEL	1					
8	93106–26815	OIL SEAL	1					
9	93306–004XV	BEARING	1					
10	BAX–F5446–00	SPROCKET, DRIVEN (46T)	1					
11	90116–08826	BOLT, STUD	6					
12	95602–08200	NUT, U FLANGE	6					
13	BAX–F5689–00	PLATE, GUIDE	1					
14	94112–17809	TIRE (120/70-70 M/C 58P)	1					DURO
15	93900–00817	VALVE, RIM (TR412)	1					
16	B5V–F5381–00	AXLE, WHEEL	1					
17	95602–14200	NUT, SELF-LOCKING	1					
18	90201–15030	WASHER, PLATE	1					
19	90387–15830	COLLAR	1					
20	BAX–F5388–00	PULLER, CHAIN 1	2					
21	BAX–F2174–00	END 1	2					
22	95302–06600	NUT, HEXAGON	4					
23	B17–F5383–00	COLLAR, WHEEL	1					
24	94568–K8124	CHAIN (RK 428-124L)	1					
25	BAX–F51G1–00	GRAPHIC 1	2					UR FOR VPBC5
	BAX–F51G1–10	GRAPHIC 1	2					UR FOR RYC1
	BAX–F51G1–20	GRAPHIC 1	2					UR FOR MS1

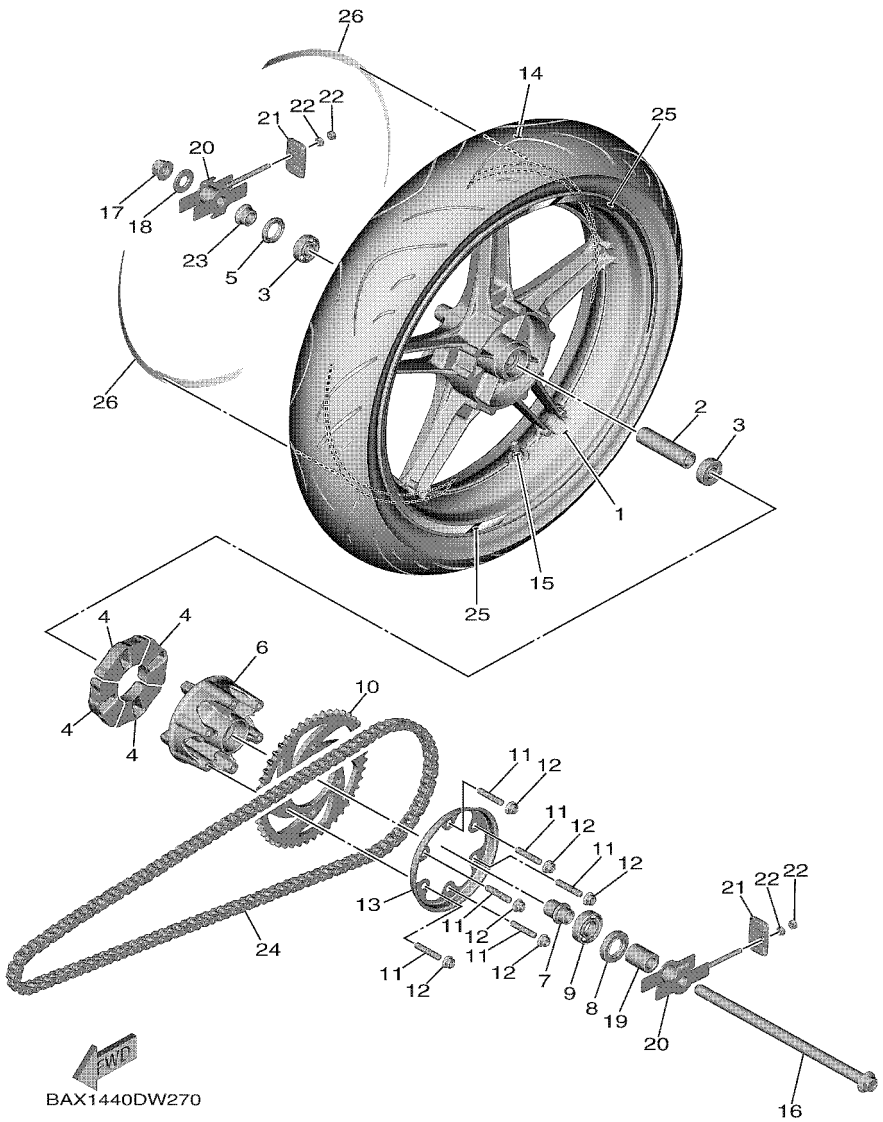

FIG. 27 REAR WHEEL

REF. NO.	PART NO.	DESCRIPTION	BAX1					REMARKS
26	BAX–F51G2–00	GRAPHIC 2	2					UR FOR VPBC5
	BAX–F51G2–10	GRAPHIC 2	2					UR FOR RYC1
	BAX–F51G2–20	GRAPHIC 2	2					UR FOR MS1

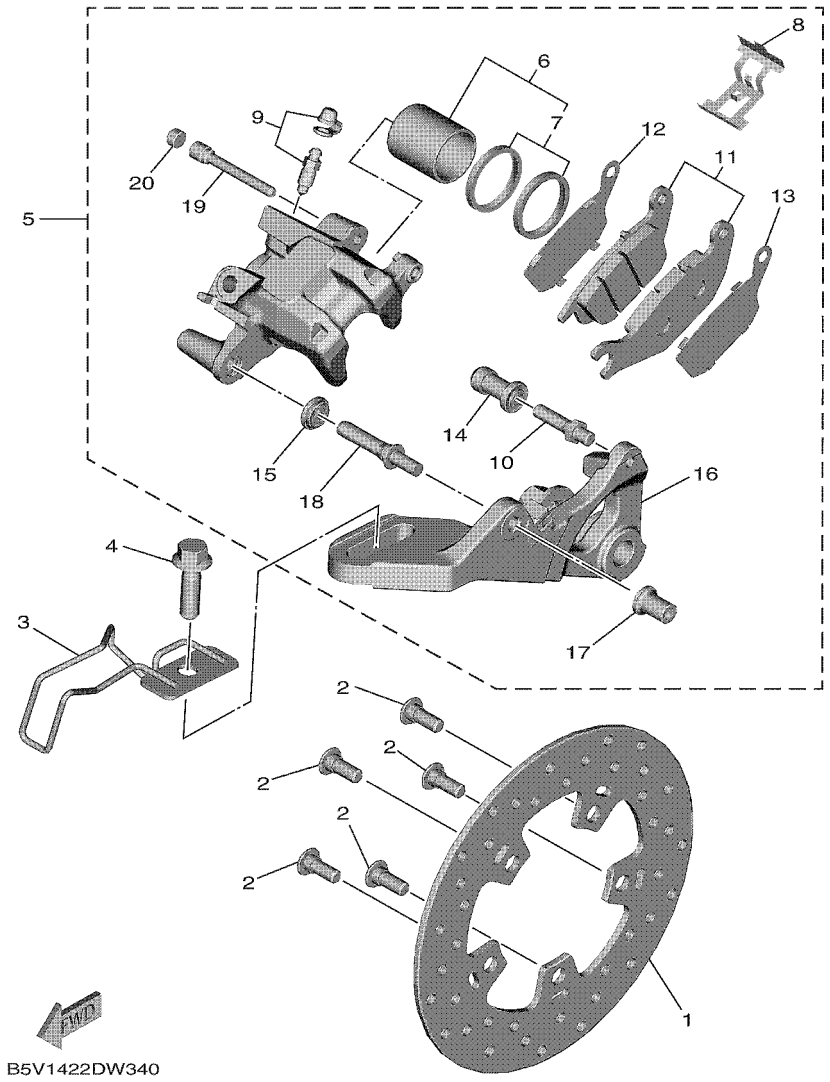

FIG. 28 REAR BRAKE CALIPER

REF. NO.	PART NO.	DESCRIPTION	BAX1					REMARKS
1	B17–F582W–00	DISK, REAR BRAKE 2	1					
2	90109–08087	BOLT	5					
3	BAX–F2167–00	GUIDE	1					
4	95D32–10035	BOLT, FLANGE DEEP RECESS	1					
5	1PA–F580W–01	CALIPER ASSY, REAR 2	1					
6	50C–F5802–00	.PISTON ASSY, CALIPER	1					
7	3GD–25803–00	..CALIPER SEAL KIT	1					
8	50C–F5919–00	.SUPPORT, PAD	1					
9	50C–W0048–00	.BLEED SCREW KIT	1					
10	50C–F5914–00	.PIN, SLIDE	1					
11	1PA–F5806–00	.BRAKE PAD KIT 2	1					
12	50C–F5827–00	.SHIM, CALIPER	1					
13	50C–F5828–00	.SHIM, CALIPER	1					
14	50C–F5937–00	.BOOT 2	1					
15	50C–F5917–00	.BOOT, CALIPER	1					
16	1PA–F5921–01	.BRACKET, SUPPORT	1					
17	50C–F5961–00	.NUT	1					
18	50C–2536G–00	.PIN	1					
19	50C–F5933–00	.PIN HANGER	1					
20	50C–F5916–00	.PLUG	1					

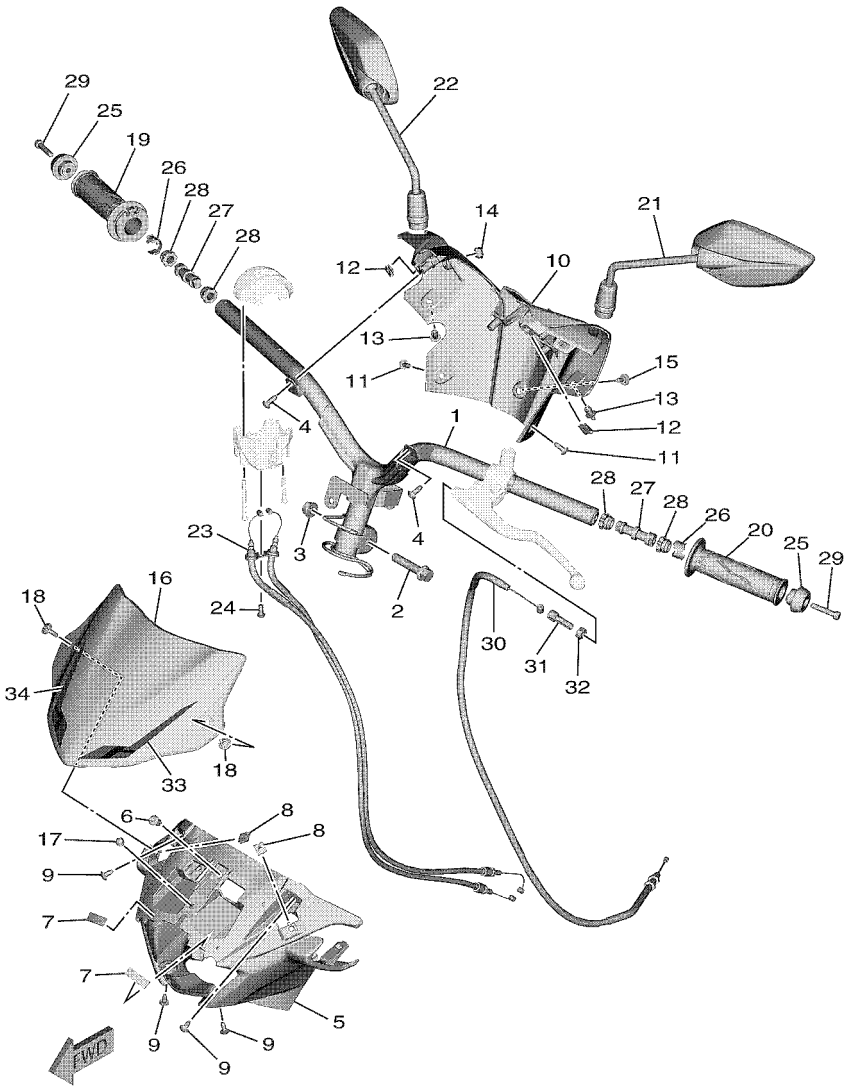

FIG. 29 STEERING HANDLE & CABLE

REF. NO.	PART NO.	DESCRIPTION	BAX1					REMARKS
1	BAX–F6110–00	HANDLE COMP.	1					
2	90105–10896	BOLT, FLANGE	1					
3	90185–10011	NUT, SELF-LOCKING	1					
4	90160–05012	SCREW, ROUND TAPPING	2					
5	BAX–F6143–00	COVER, HANDLE UPPER 1	1					
6	90269–06816	RIVET	1					
7	90520–02014	DAMPER, PLATE	2					
8	90183–05061	NUT, SPRING	2					
9	97707–50012	SCREW, TRUSS HEAD TAPPING	4					
10	BAX–F6145–00	COVER, HANDLE UPPER 2	1					
11	90160–05009	SCREW, ROUND TAPPING	2					
12	90183–05807	NUT, SPRING	2					
13	90269–06816	RIVET	2					
14	1S8–F6199–00	PLUG, BLIND	1					
15	90111–05049	BOLT,HEX. SOCKET BUTTON	1					
16	BAX–F61AA–00–P0	VISOR	1					UR FOR VPBC5
	BAX–F61AA–00–P1	VISOR	1					UR FOR RYC1
	BAX–F61AA–00–P2	VISOR	1					UR FOR MS1
17	BAX–F1717–00	DAMPER	1					
18	90111–05817	BOLT,HEX. SOCKET BUTTON	2					
19	B17–F6240–02	GRIP ASSY	1					
20	1VP–F6241–00	GRIP	1					
21	B17–F6280–10	REAR VIEW MIRROR ASSY (LEFT)	1					
22	B17–F6290–10	REAR VIEW MIRROR ASSY (RIGHT)	1					
23	BAX–F6301–00	THROTTLE CABLE ASSY	1					
24	92012–05012	BOLT, BUTTON HEAD	1					
25	BAX–F6246–00	END, GRIP	2					

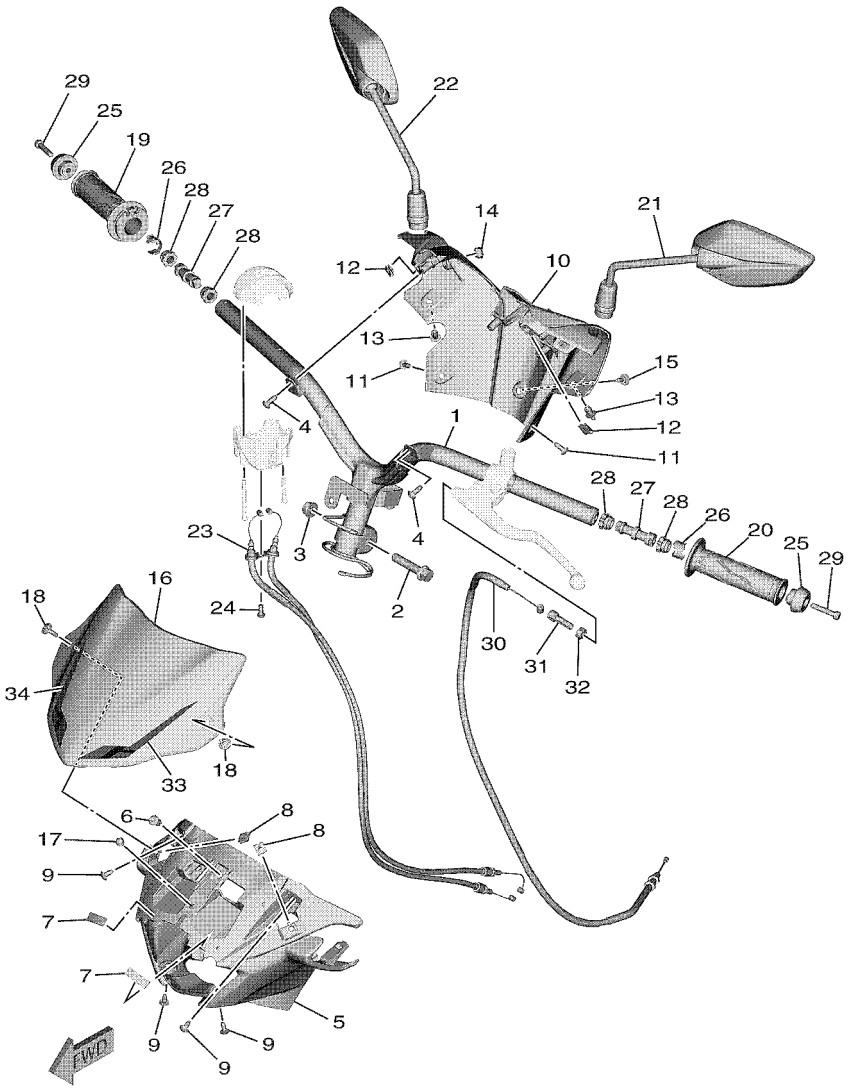

FIG. 29 STEERING HANDLE & CABLE

REF. NO.	PART NO.	DESCRIPTION	BAX1					REMARKS
26	16S–F6257–00	STOPPER	2					
27	BAX–F622H–00	WEIGHT	2					
28	1S8–F622F–00	DAMPER, LOCATING 1	4					
29	91317–06030	BOLT,HEX.SOCKET HEAD	2					
30	BAX–F6335–00	WIRE, CLUTCH	1					
31	90123–08046	BOLT	1					
32	90170–08401	NUT	1					
33	BAX–F60C1–00	EMBLEM 1	1					UR FOR VPBC5
	BAX–F60C1–10	EMBLEM 1	1					UR FOR RYC1
	BAX–F60C1–20	EMBLEM 1	1					UR FOR MS1
34	BAX–F60C2–00	EMBLEM 2	1					UR FOR VPBC5
	BAX–F60C2–10	EMBLEM 2	1					UR FOR RYC1
	BAX–F60C2–20	EMBLEM 2	1					UR FOR MS1

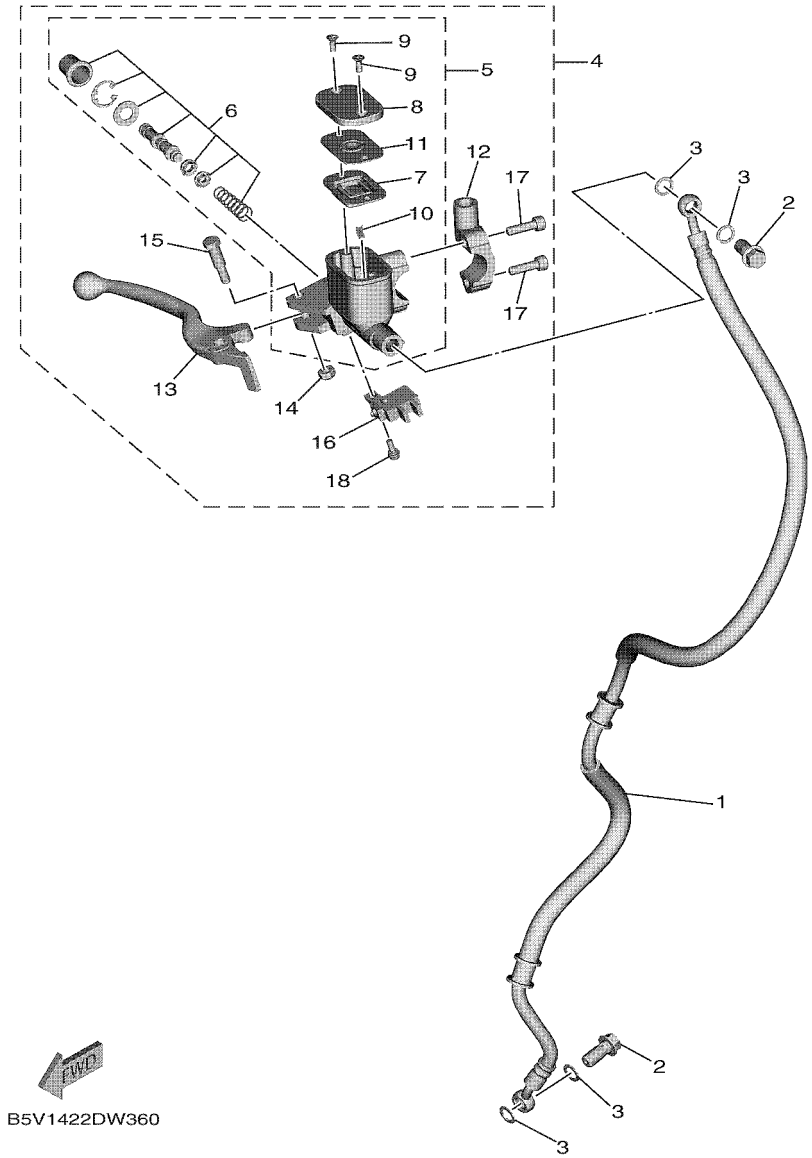

FIG. 30 FRONT MASTER CYLINDER

REF. NO.	PART NO.	DESCRIPTION	BAX1					REMARKS
1	B5V–F5872–00	HOSE, BRAKE 1	1					
2	90401–10812	BOLT, UNION	2					
3	90201–10118	WASHER, PLATE	4					
4	B5V–F583T–00	MASTER CYLINDER ASSY	1					
5	2ND–F5870–00	.MASTER CYLINDER SUB ASSY	1					
6	5P0–F580A–00	..CYLINDER KIT, MASTER	1					
7	2ND–F5854–00	..DIAPHRAGM, RESERVOIR	1					
8	2ND–F5852–00	..CAP, RESERVOIR	1					
9	36Y–2589H–00	..SCREW	2					
10	3RW–F5889–00	..SEPARATOR	1					
11	2ND–F5855–00	..BUSH,DIAPHRAGM	1					
12	5TL–F5867–11	.BRACKET,MASTER CYLINDER(BLACK)	1					
13	2ND–H3922–00	.LEVER 2	1					
14	95602–06100	.NUT, SELF-LOCKING	1					
15	90109–06577	.BOLT	1					
16	B6H–H3980–00	.FRONT STOP SWITCH ASSY	1					
17	91317–06025	.BOLT,HEX.SOCKET HEAD	2					
18	97602–04312	.SCREW, PAN HEAD WITH WASHER	1					

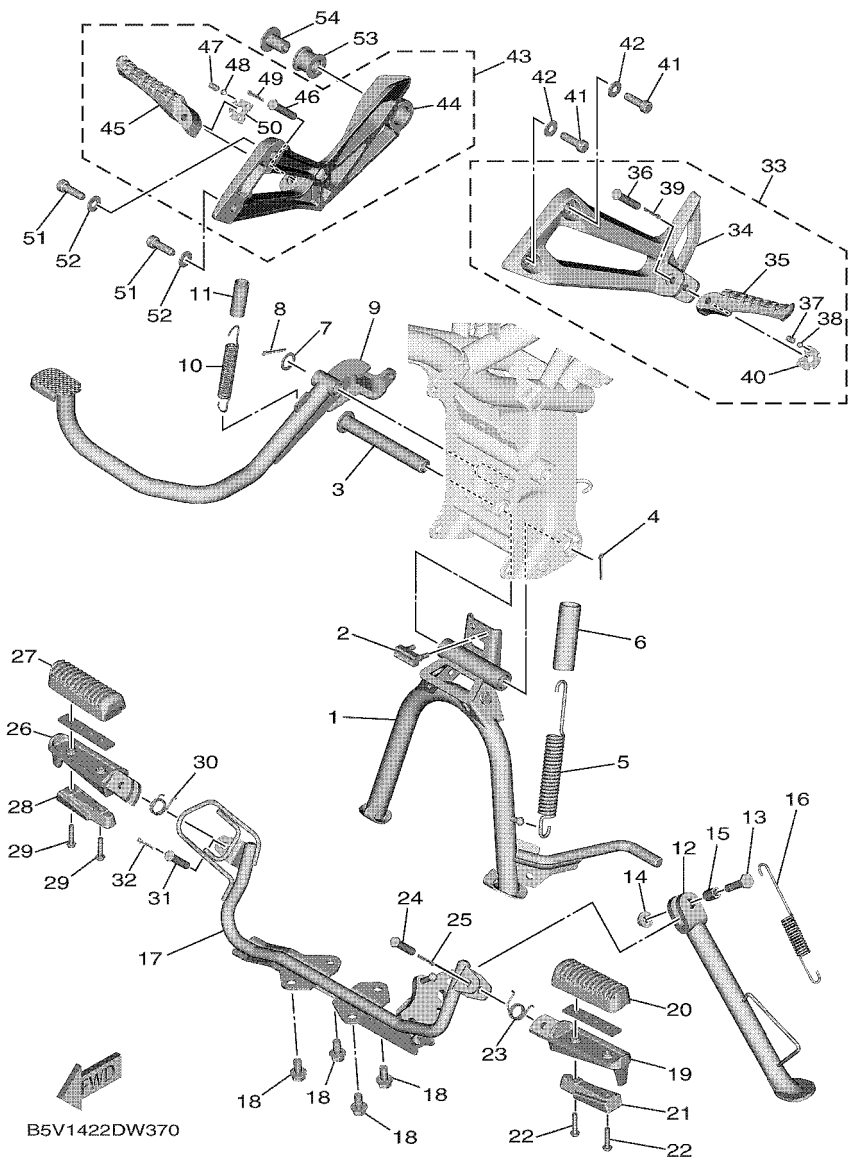

FIG. 31 STAND & FOOTREST

REF. NO.	PART NO.	DESCRIPTION	BAX1					REMARKS
1	B17–F7111–10	STAND, MAIN	1					
2	31D–F7114–00	STOPPER, MAIN STAND	1					
3	5YP–F7112–00	SHAFT, MAIN STAND	1					
4	91401–30030	PIN, COTTER	1					
5	90506–35806	SPRING, TENSION	1					
6	90445–22800	HOSE	1					
7	90201–14811	WASHER, PLATE	1					
8	91401–30030	PIN, COTTER	1					
9	BAX–F7211–00	PEDAL, BRAKE	1					
10	90506–20041	SPRING, TENSION	1					
11	90446–15386	HOSE	1					
12	BAX–F7311–00	STAND, SIDE	1					
13	90101–08829	BOLT	1					
14	95602–08200	NUT, U FLANGE	1					
15	90387–08820	COLLAR	1					
16	90506–26814	SPRING, TENSION	1					
17	BAX–F7411–00	FOOTREST 1	1					
18	95D32–08016	BOLT, FLANGE DEEP RECESS	4					
19	BAX–F7451–00	FOOTREST 3	1					
20	B17–F7413–00	COVER, FOOTREST	1					
21	B5V–F741E–00	ARM 2	1					
22	97602–05225	SCREW, PAN HEAD WITH WASHER	2					
23	90508–183B9	SPRING, TORSION	1					
24	91701–08035	PIN	1					
25	91401–25015	PIN, COTTER	1					
26	BAX–F7461–00	FOOTREST 4	1					
27	B17–F7413–00	COVER, FOOTREST	1					

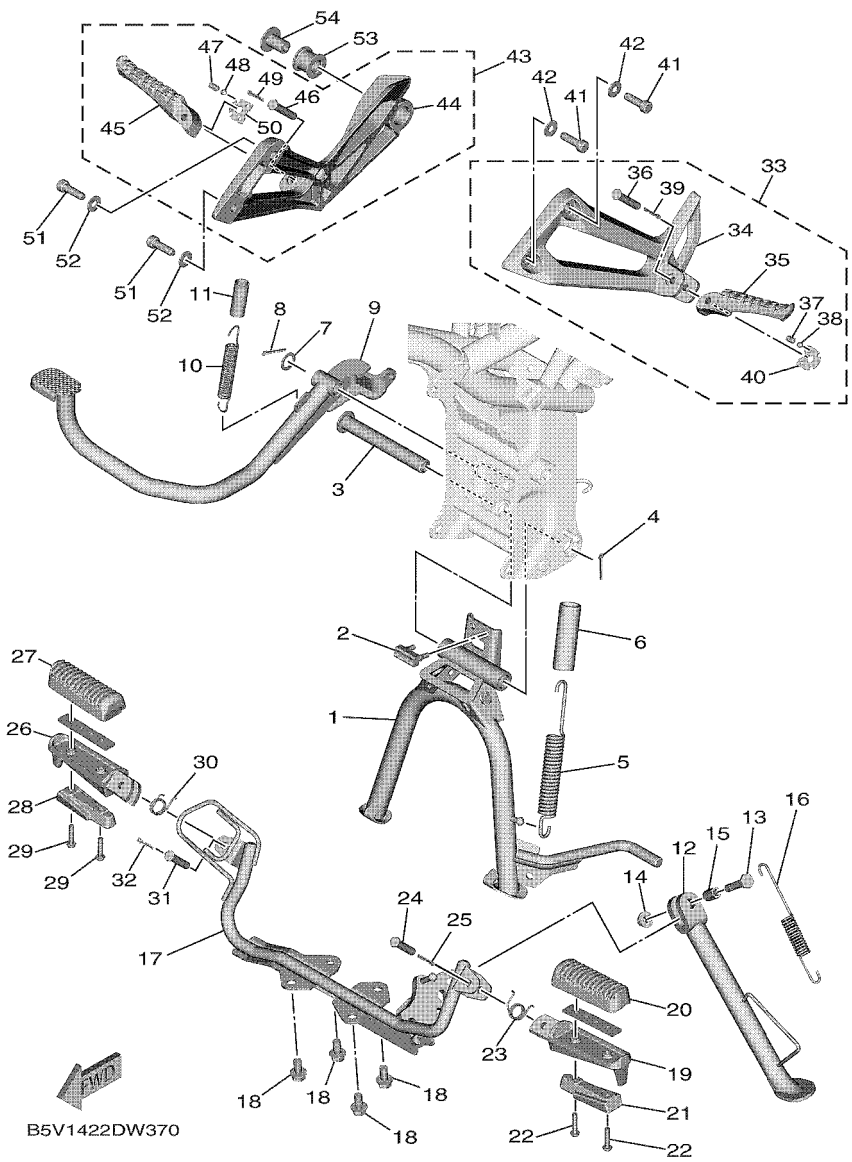

FIG. 31 STAND & FOOTREST

REF. NO.	PART NO.	DESCRIPTION	BAX1					REMARKS
28	B5V–F741E–00	ARM 2	1					
29	97602–05225	SCREW, PAN HEAD WITH WASHER	2					
30	90508–183B9	SPRING, TORSION	1					
31	91701–08035	PIN	1					
32	91401–25015	PIN, COTTER	1					
33	B17–F7430–00–P0	REAR FOOTREST ASSY 1	1					MBL2
34	B17–F7452–00–P0	.BRACKET, FOOTREST 1	1					MBL2
35	3C1–F7431–01	.FOOTREST, REAR 1	1					
36	91702–08042	.PIN, CLEVIS	1					
37	90501–12743	.SPRING, COMPRESSION	1					
38	93501–04823	.BALL	1					
39	91401–25015	.PIN, COTTER	1					
40	B17–F7437–00	.WASHER, SPECIAL	1					
41	91312–08025	BOLT, HEXAGON SOCKET HEAD	2					
42	90201–08043	WASHER, PLATE	2					
43	B17–F7440–00–P0	REAR FOOTREST ASSY 2	1					MBL2
44	B17–F7462–00–P0	.BRACKET, FOOTREST 2	1					MBL2
45	3C1–F7441–01	.FOOTREST, REAR 2	1					
46	91702–08042	.PIN, CLEVIS	1					
47	90501–12743	.SPRING, COMPRESSION	1					
48	93501–04823	.BALL	1					
49	91401–25015	.PIN, COTTER	1					
50	B17–F7437–00	.WASHER, SPECIAL	1					
51	91312–08025	BOLT, HEXAGON SOCKET HEAD	2					
52	90201–08043	WASHER, PLATE	2					
53	B17–E4747–00	DAMPER, MUFFLER	1					
54	90387–08812	COLLAR	1					

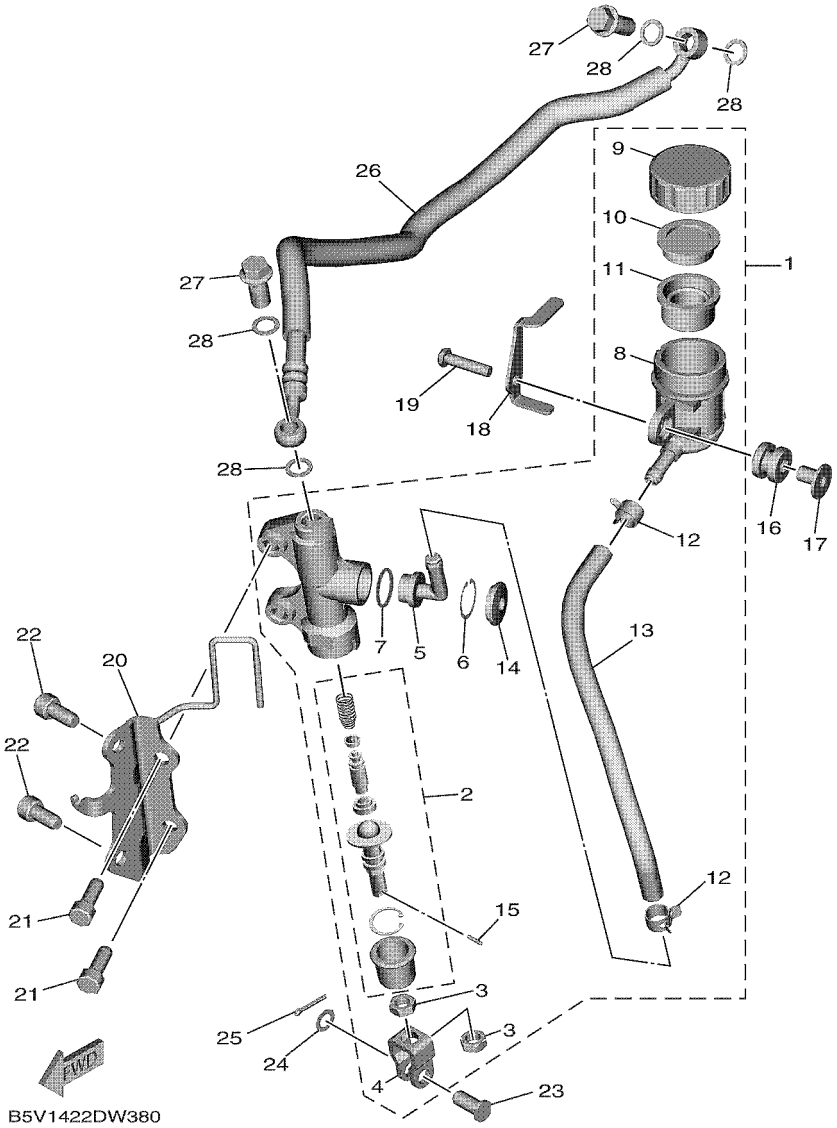

FIG. 32 REAR MASTER CYLINDER

REF. NO.	PART NO.	DESCRIPTION	BAX1					REMARKS
1	2ND–F580E–00	REAR MASTER CYLINDER ASSY	1					
2	2ND–F5808–00	.CYLINDER KIT, MASTER	1					
3	95301–08700	.NUT	2					
4	50C–F7222–00	.JOINT	1					
5	50C–F582A–50	.JOINT	1					
6	50C–F5866–00	.CIRCLIP	1					
7	93210–15620	.O-RING	1					
8	50C–F5894–11	.TANK, RESERVOIR	1					
9	50C–F5852–00	.CAP, RESERVOIR	1					
10	50C–F5855–00	.BUSH,DIAPHRAGM	1					
11	2VN–F5854–00	.DIAPHRAGM, RESERVOIR	1					
12	90467–12085	.CLIP	2					
13	4S3–F5895–00	.HOSE, RESERVOIR	1					
14	50C–F589A–00	.COVER, DUST	1					
15	5BU–27234–00	.PIN, BRAKE ROD	1					
16	55C–F4742–00	GROMMET	1					
17	55C–F6259–00	COLLAR	1					
18	BAX–F5888–00	COVER, RESERVOIR TANK	1					
19	98507–06025	SCREW, PAN HEAD	1					
20	BAX–F133F–00	BRACKET, MASTER CYLINDER	1					
21	91317–08020	BOLT,HEX.SOCKET HEAD	2					
22	91317–08016	BOLT,HEX.SOCKET HEAD	2					
23	90240–08005	PIN, CLEVIS	1					
24	90201–08066	WASHER, PLATE	1					
25	91401–20012	PIN, COTTER	1					
26	B5V–F5873–00	HOSE, BRAKE 2	1					
27	90401–10812	BOLT, UNION	2					

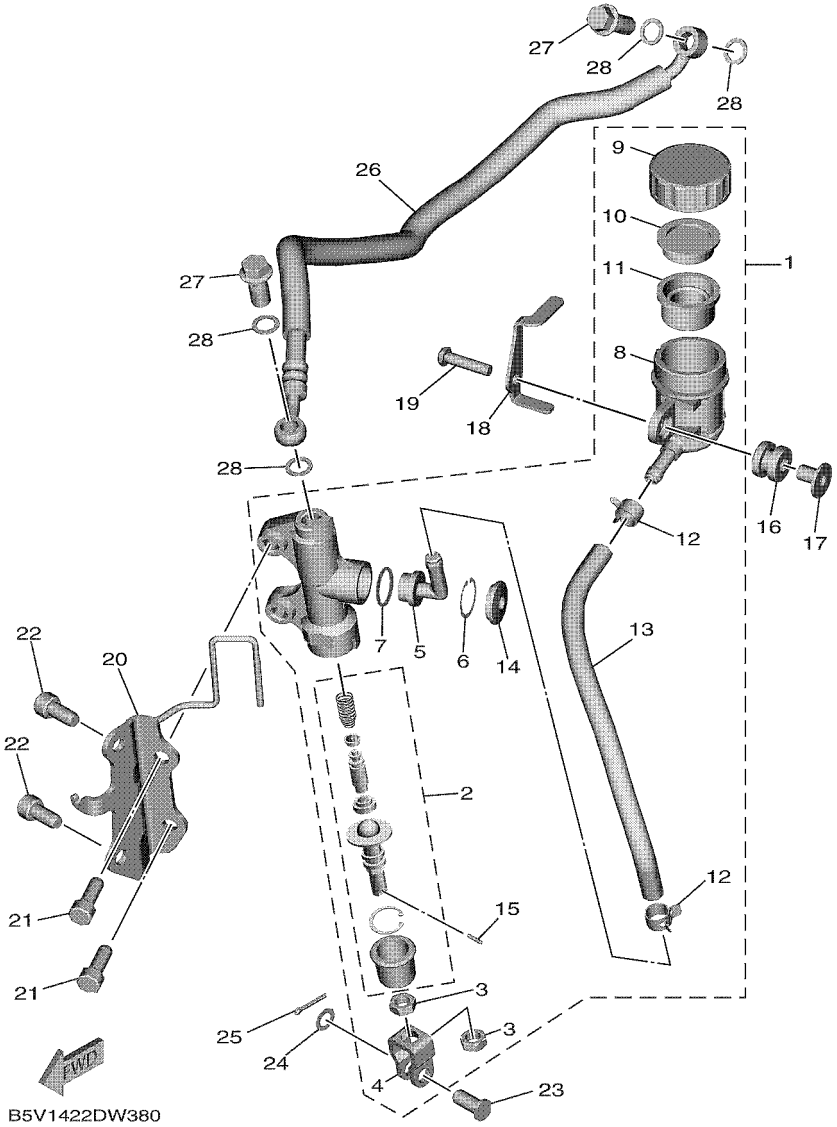

FIG. 32 REAR MASTER CYLINDER

REF. NO.	PART NO.	DESCRIPTION	BAX1					REMARKS
28	90201–10118	WASHER, PLATE	4					

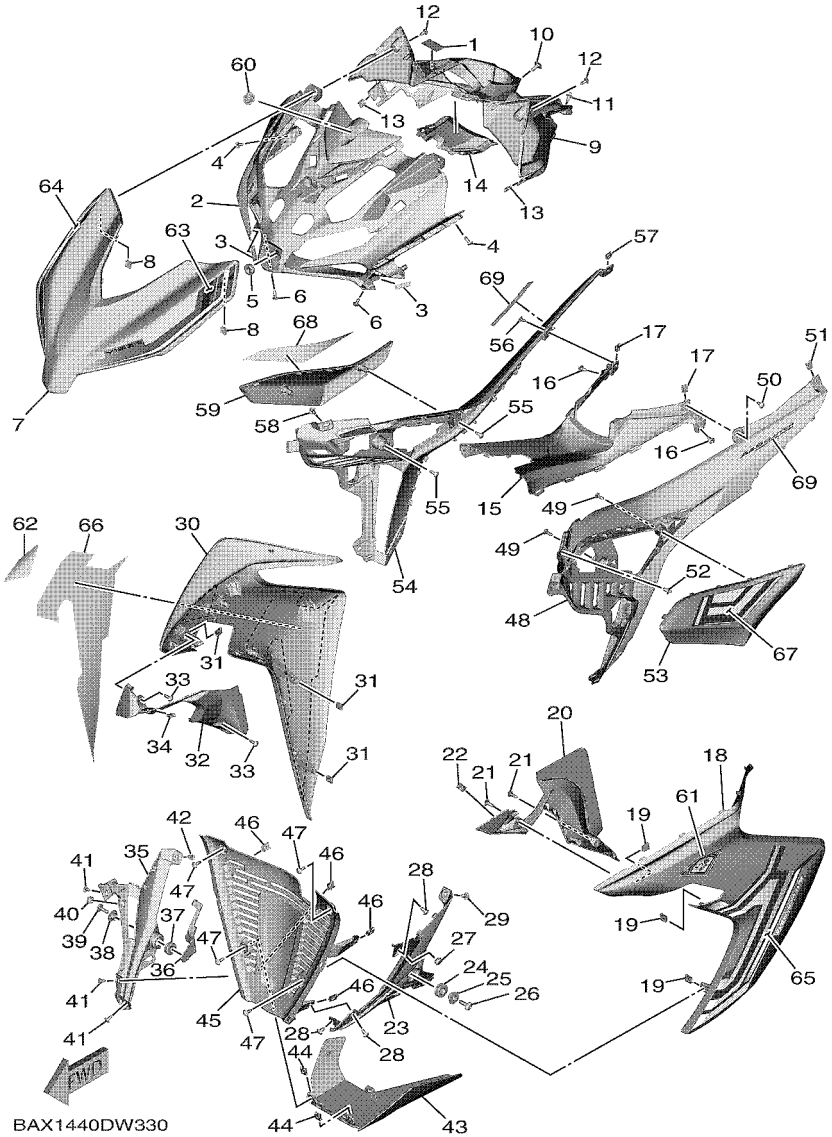

FIG. 33 LEG SHIELD

REF. NO.	PART NO.	DESCRIPTION	BAX1					REMARKS
1	B17–F1568–00	LABEL, WARNING	1					
2	BAX–F836K–00	PANEL, INNER 1	1					
3	B5V–F8344–00	TAPE	2					
4	97707–50016	SCREW, TRUSS HEAD TAPPING	2					
5	90480–13398	GROMMET	1					
6	90160–05009	SCREW, ROUND TAPPING	2					
7	BAX–F3391–00–P0	PANEL, FRONT	1					UR FOR VPBC5
	BAX–F3391–00–P1	PANEL, FRONT	1					UR FOR RYC1
	BAX–F3391–00–P2	PANEL, FRONT	1					UR FOR MS1
8	90183–05807	NUT, SPRING	2					
9	BAX–F836L–00	PANEL, INNER 2	1					
10	90111–06848	BOLT,HEX. SOCKET BUTTON	1					
11	90269–06816	RIVET	1					
12	90160–05009	SCREW, ROUND TAPPING	2					
13	90183–05807	NUT, SPRING	2					
14	BAX–F843J–00	COVER 3	1					
15	BAX–F8365–00	COVER	1					
16	90269–06816	RIVET	2					
17	90183–05807	NUT, SPRING	2					
18	BAX–F835U–00–P0	PANEL 1	1					UR SMX FOR VPBC5
	BAX–F835U–00–P1	PANEL 1	1					UR MNM3 FOR RYC1
	BAX–F835U–00–P2	PANEL 1	1					UR DBNM8 FOR MS1
19	90183–05807	NUT, SPRING	3					
20	BAX–F137U–01	GUIDE, AIR 1	1					
21	97707–50016	SCREW, TRUSS HEAD TAPPING	2					
22	90183–05807	NUT, SPRING	1					
23	BAX–F8385–00	COVER, LOWER	1					

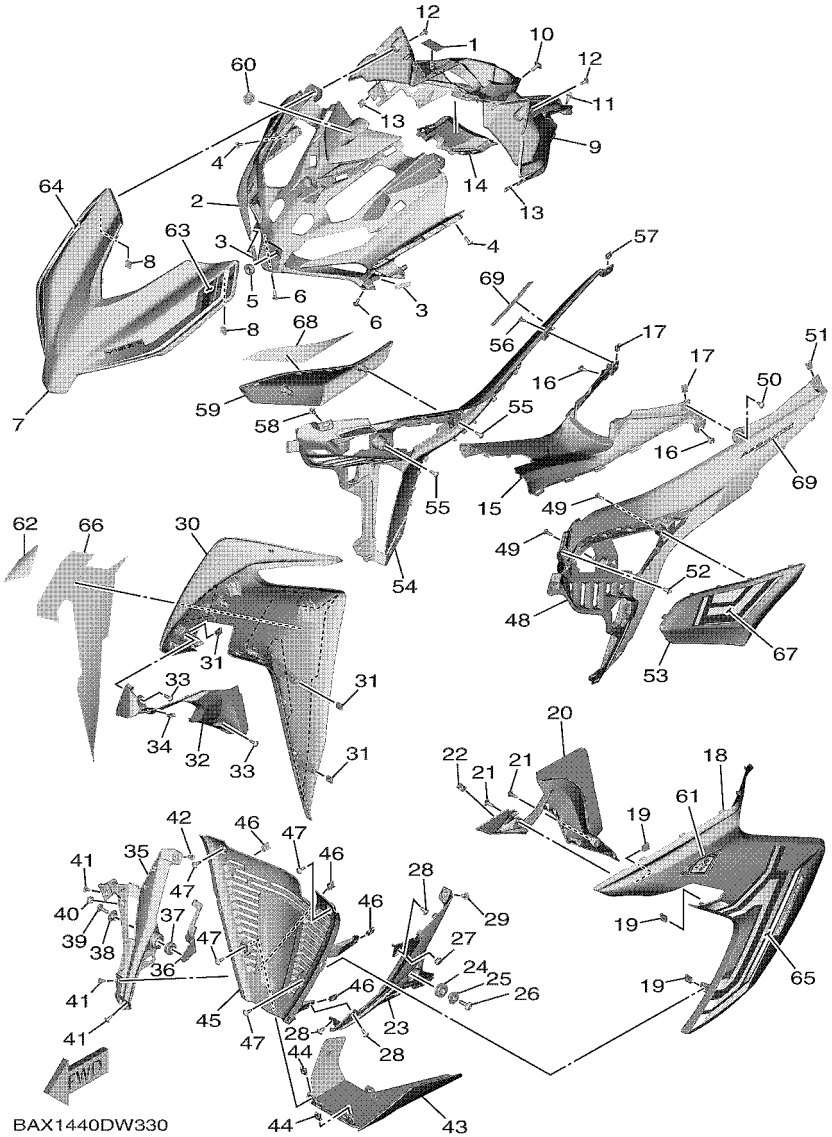

FIG. 33 LEG SHIELD

REF. NO.	PART NO.	DESCRIPTION	BAX1					REMARKS
24	90480–18418	GROMMET	1					
25	90387–09801	COLLAR	1					
26	90111–06815	BOLT,HEX. SOCKET BUTTON	1					
27	1S8–F6199–00	PLUG, BLIND	1					
28	97707–50012	SCREW, TRUSS HEAD TAPPING	3					
29	90269–06816	RIVET	1					
30	BAX–F835V–00–P0	PANEL 2	1					UR SMX FOR VPBC5
	BAX–F835V–00–P1	PANEL 2	1					UR MNM3 FOR RYC1
	BAX–F835V–00–P2	PANEL 2	1					UR DBNM8 FOR MS1
31	90183–05807	NUT, SPRING	3					
32	BAX–F137V–01	GUIDE, AIR 2	1					
33	97707–50016	SCREW, TRUSS HEAD TAPPING	2					
34	90183–05807	NUT, SPRING	1					
35	BAX–F8395–00	COVER, UNDER 2	1					
36	BAX–F8322–00	STAY 2	1					
37	90480–18418	GROMMET	1					
38	90387–09801	COLLAR	1					
39	90111–06815	BOLT,HEX. SOCKET BUTTON	1					
40	1S8–F6199–00	PLUG, BLIND	1					
41	97707–50012	SCREW, TRUSS HEAD TAPPING	3					
42	90269–06816	RIVET	1					
43	BAX–F837D–00–P0	COVER, UNDER 3	1					UR SMX FOR VPBC5
	BAX–F837D–00–P1	COVER, UNDER 3	1					UR MNM3 FOR RYC1
	BAX–F837D–00–P2	COVER, UNDER 3	1					UR DBNM8 FOR MS1
44	90183–05807	NUT, SPRING	2					
45	BAX–F1552–01	FENDER, INNER	1					
46	90183–05807	NUT, SPRING	4					

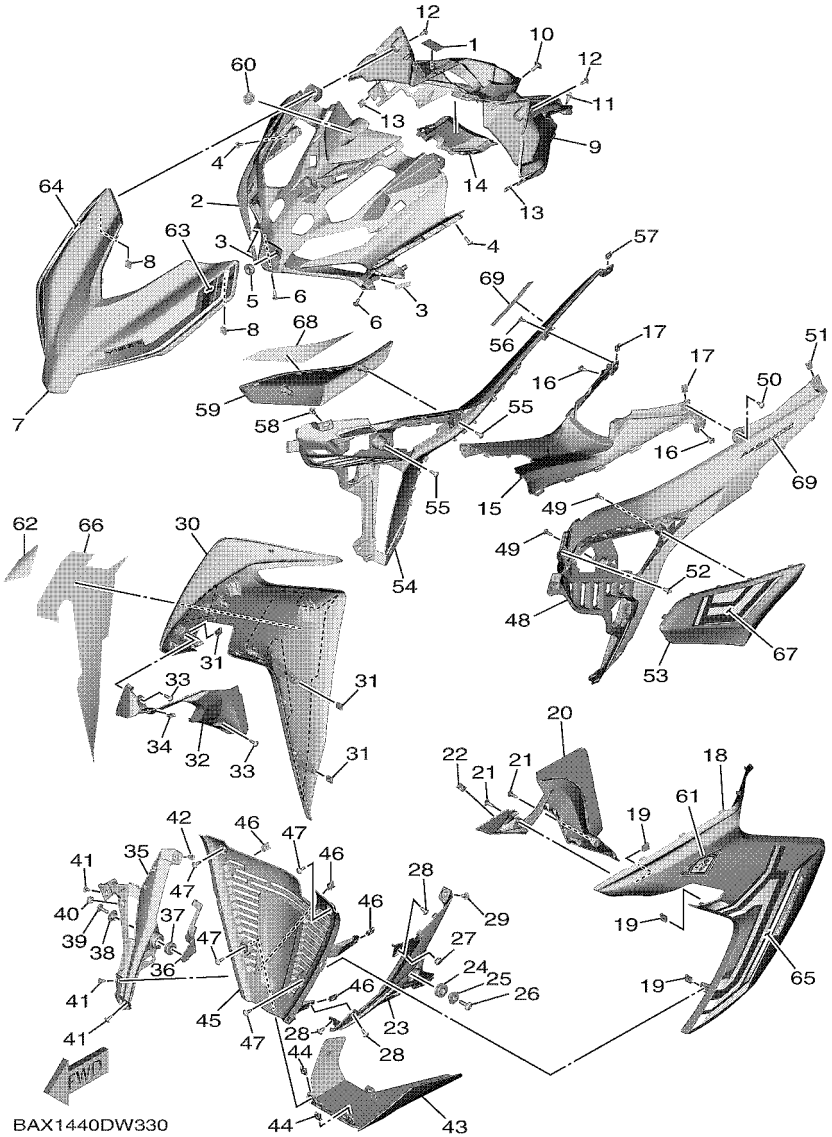

FIG. 33 LEG SHIELD

REF. NO.	PART NO.	DESCRIPTION	BAX1					REMARKS
47	90160–05009	SCREW, ROUND TAPPING	4					
48	BAX–F842M–00–P0	COVER 1	1					UR FOR VPBC5
	BAX–F842M–00–P1	COVER 1	1					UR FOR RYC1
	BAX–F842M–00–P2	COVER 1	1					UR FOR MS1
49	97707–50016	SCREW, TRUSS HEAD TAPPING	2					
50	90160–05009	SCREW, ROUND TAPPING	1					
51	90183–05807	NUT, SPRING	1					
52	90269–06816	RIVET	1					
53	BAX–F172G–00–P0	PANEL 3	1					UR SMX FOR VPBC5
	BAX–F172G–00–P1	PANEL 3	1					UR MNM3 FOR RYC1
	BAX–F172G–00–P2	PANEL 3	1					UR DBNM8 FOR MS1
54	BAX–F842N–00–P0	COVER 2	1					UR FOR VPBC5
	BAX–F842N–00–P1	COVER 2	1					UR FOR RYC1
	BAX–F842N–00–P2	COVER 2	1					UR FOR MS1
55	97707–50016	SCREW, TRUSS HEAD TAPPING	2					
56	90160–05009	SCREW, ROUND TAPPING	1					
57	90183–05807	NUT, SPRING	1					
58	90269–06816	RIVET	1					
59	BAX–F172H–00–P0	PANEL 4	1					UR SMX FOR VPBC5
	BAX–F172H–00–P1	PANEL 4	1					UR MNM3 FOR RYC1
	BAX–F172H–00–P2	PANEL 4	1					UR DBNM8 FOR MS1
60	B17–F836B–30	TUNING FORK MARK	1					
61	BAX–F8328–00	EMBLEM	1					
62	BAX–F8338–00	EMBLEM	1					
63	BAX–F8398–00	GRAPHIC 5	1					UR FOR VPBC5
	BAX–F8398–10	GRAPHIC 5	1					UR FOR RYC1
	BAX–F8398–20	GRAPHIC 5	1					UR FOR MS1

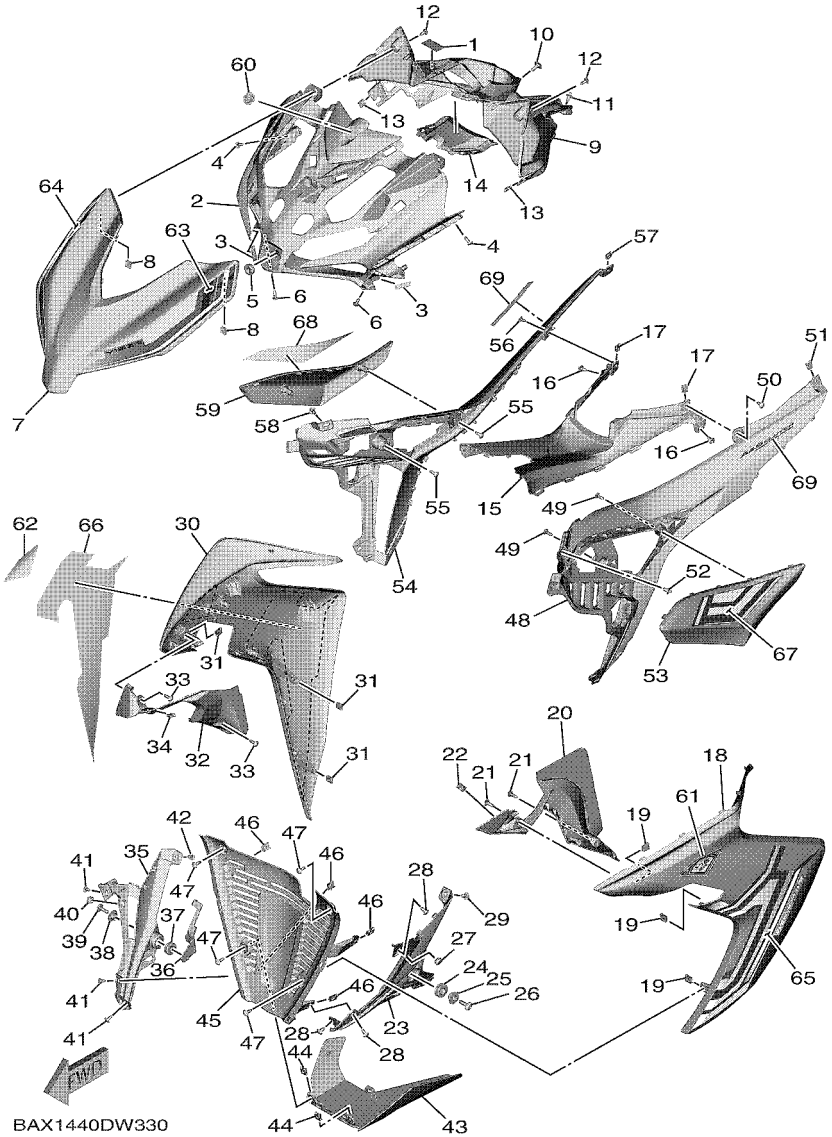

FIG. 33 LEG SHIELD

REF. NO.	PART NO.	DESCRIPTION	BAX1					REMARKS
64	BAX–F8399–00	GRAPHIC 6	1					UR FOR VPBC5
	BAX–F8399–10	GRAPHIC 6	1					UR FOR RYC1
	BAX–F8399–20	GRAPHIC 6	1					UR FOR MS1
65	BAX–F839A–00	GRAPHIC 7	1					UR FOR VPBC5
	BAX–F839A–10	GRAPHIC 7	1					UR FOR RYC1
	BAX–F839A–20	GRAPHIC 7	1					UR FOR MS1
66	BAX–F839E–00	GRAPHIC 8	1					UR FOR VPBC5
	BAX–F839E–10	GRAPHIC 8	1					UR FOR RYC1
	BAX–F839E–20	GRAPHIC 8	1					UR FOR MS1
67	BAX–F83GE–00	GRAPHIC, 11	1					UR FOR VPBC5
	BAX–F83GE–10	GRAPHIC, 11	1					UR FOR RYC1
	BAX–F83GE–20	GRAPHIC, 11	1					UR FOR MS1
68	BAX–F83GF–00	GRAPHIC, 12	1					UR FOR VPBC5
	BAX–F83GF–10	GRAPHIC, 12	1					UR FOR RYC1
	BAX–F83GF–20	GRAPHIC, 12	1					UR FOR MS1
69	BAX–F834C–00	EMBLEM, 1	2					UR FOR VPBC5
	BAX–F834C–10	EMBLEM, 1	2					UR FOR RYC1
	BAX–F834C–20	EMBLEM, 1	2					UR FOR MS1

FIG. 34 GENERATOR

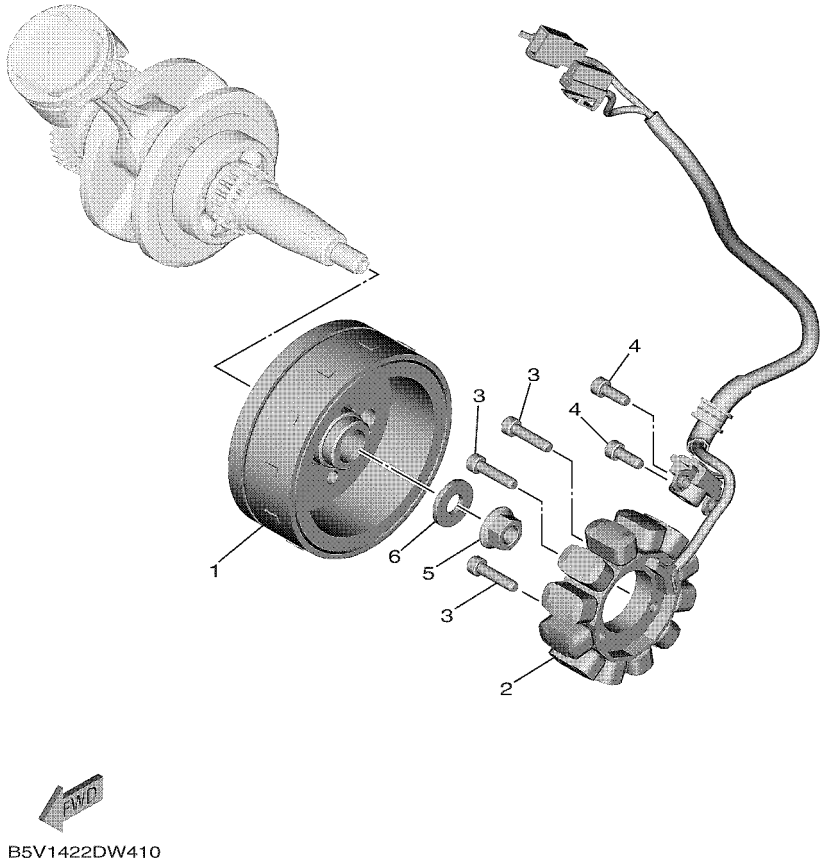

REF. NO.	PART NO.	DESCRIPTION	BAX1					REMARKS
1	2ND–H1450–02	ROTOR ASSY	1					
2	B5V–H1410–00	STATOR ASSY	1					
3	91332–06025	BOLT	3					
4	91332–06016	BOLT	2					
5	95702–12500	NUT, FLANGE	1					
6	90201–12019	WASHER, PLATE	1					

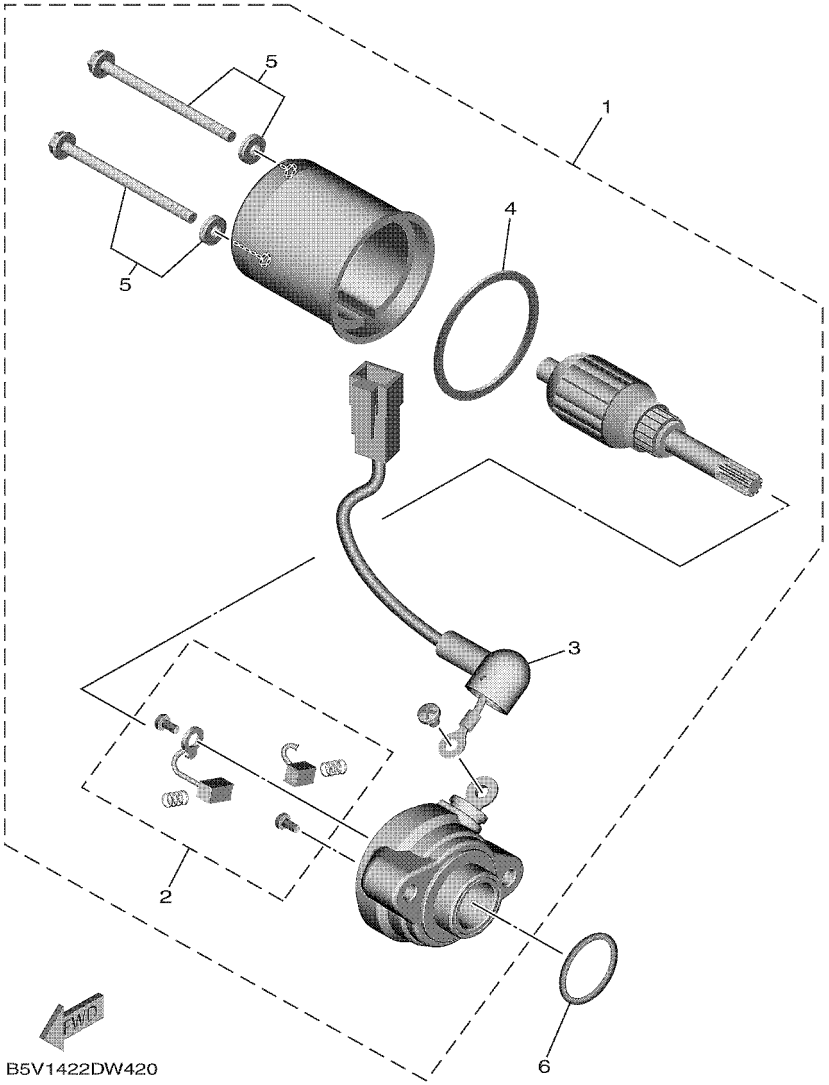

FIG. 35 STARTING MOTOR

REF. NO.	PART NO.	DESCRIPTION	BAX1					REMARKS
1	2ND–H1890–02	MOTOR ASSY	1					
2	2BM–H1801–00	.BRUSH SET	1					
3	1FC–H183G–00	.CORD COMP.	1					
4	5D9–H1861–00	.GASKET	1					
5	5D9–H1828–00	.SCREW SET	1					
6	93210–26806	O-RING	1					

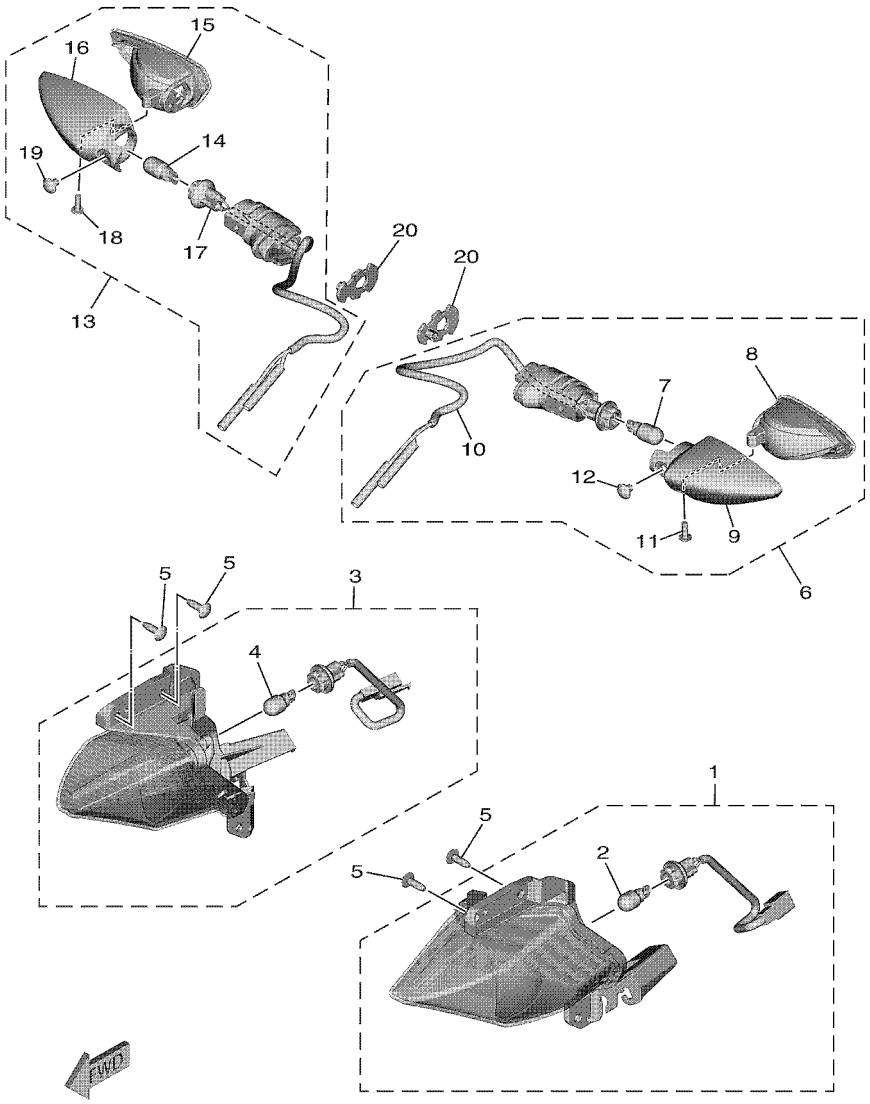

BAX1440DW360

FIG. 36 FLASHER LIGHT

REF. NO.	PART NO.	DESCRIPTION	BAX1					REMARKS
1	B5V–H3310–00	FRONT FLASHER LIGHT ASSY 1	1					
2	2CB–H3311–00	.BULB, FLASHER (12V-10W)	1					
3	B5V–H3320–00	FRONT FLASHER LIGHT ASSY 2	1					
4	2CB–H3311–00	.BULB, FLASHER (12V-10W)	1					
5	97707–50016	SCREW, TRUSS HEAD TAPPING	4					
6	BAX–H3330–00	REAR FLASHER LIGHT ASSY 1	1					
7	55D–H3311–00	.BULB, FLASHER (12V-10W)	1					
8	55D–H333A–00	.LENS COMP 1	1					
9	55D–H3323–00	.BODY	1					
10	BAX–H333E–00	.CORD ASSY	1					
11	55D–H3333–00	.SCREW, LENS FITTING	1					
12	55D–H3358–00	.SCREW, SPECIAL	1					
13	BAX–H3340–00	REAR FLASHER LIGHT ASSY 2	1					
14	55D–H3311–00	.BULB, FLASHER (12V-10W)	1					
15	55D–H334A–00	.LENS COMP 2	1					
16	55D–H332M–00	.BODY 2	1					
17	BAX–H334E–00	.CORD ASSY	1					
18	55D–H3333–00	.SCREW, LENS FITTING	1					
19	55D–H3358–00	.SCREW, SPECIAL	1					
20	1VP–H3318–00	STAY, FLASHER 1	2					

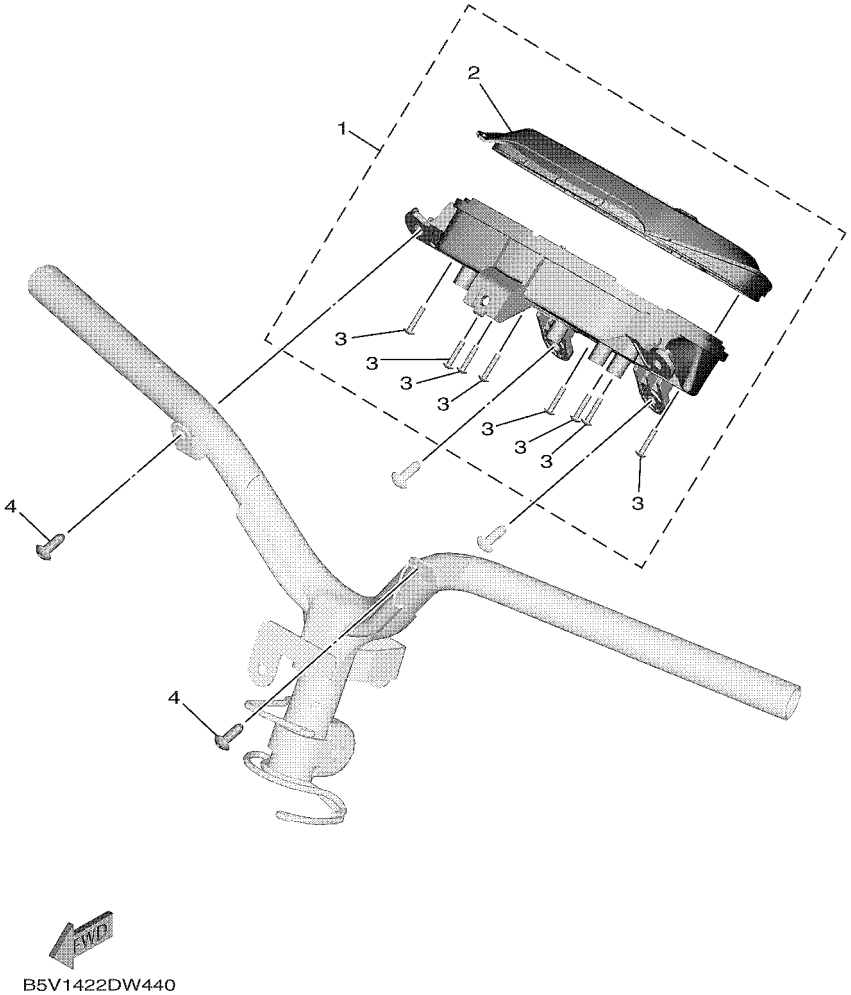

FIG. 37 METER

REF. NO.	PART NO.	DESCRIPTION	BAX1					REMARKS
1	B5V–H3500–00	METER ASSY	1					
2	B5V–H3571–00	.CASE, SPEEDOMETER UPPER	1					
3	97702–30016	.SCREW,TAPPING	8					
4	90160–05012	SCREW, ROUND TAPPING	2					

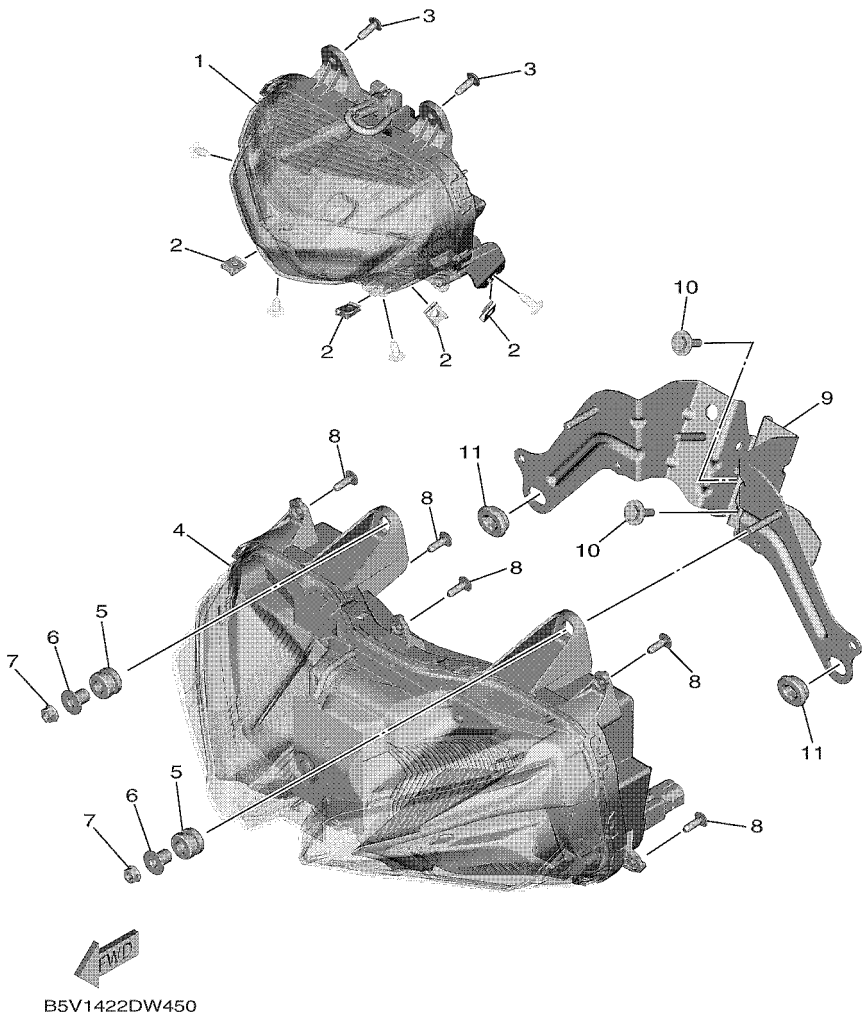

FIG. 38 HEADLIGHT

REF. NO.	PART NO.	DESCRIPTION	BAX1					REMARKS
1	B5V–H4310–00	HEADLIGHT UNIT ASSY	1					
2	90183–05807	NUT, SPRING	4					
3	90160–05012	SCREW, ROUND TAPPING	2					
4	B5V–H431A–00	HEADLIGHT UNIT ASSY 2	1					
5	90480–14023	GROMMET	2					
6	90387–06158	COLLAR	2					
7	95702–06500	NUT, FLANGE	2					
8	90160–05012	SCREW, ROUND TAPPING	5					
9	BAX–H4118–00	STAY, HEADLIGHT 1	1					
10	90119–06810	BOLT, WITH WASHER	2					
11	90480–01870	GROMMET	2					

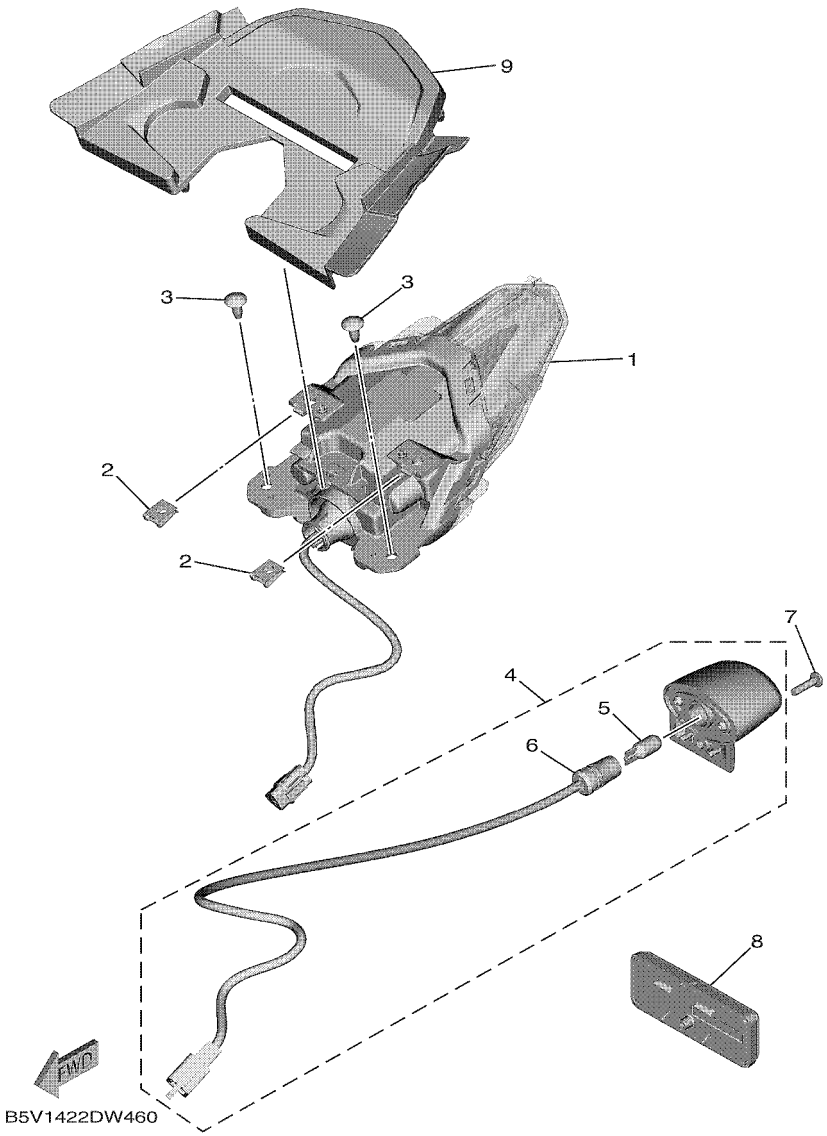

FIG. 39 TAILLIGHT

REF. NO.	PART NO.	DESCRIPTION	BAX1					REMARKS
1	B5V–H4710–00	TAILLIGHT UNIT ASSY	1					
2	90183–05807	NUT, SPRING	2					
3	97707–50012	SCREW, TRUSS HEAD TAPPING	2					
4	BAX–H4740–00	LICENCE LIGHT ASSY	1					
5	B17–H4744–00	.BULB (12V-5W)	1					
6	BXA–H4547–00	.CORD, LICENCE LIGHT	1					
7	98907–04016	SCREW, BIND	1					
8	55D–H5130–00	REAR REFLECTOR ASSY	1					
9	BAX–H4516–00	COVER, TAILLIGHT	1					

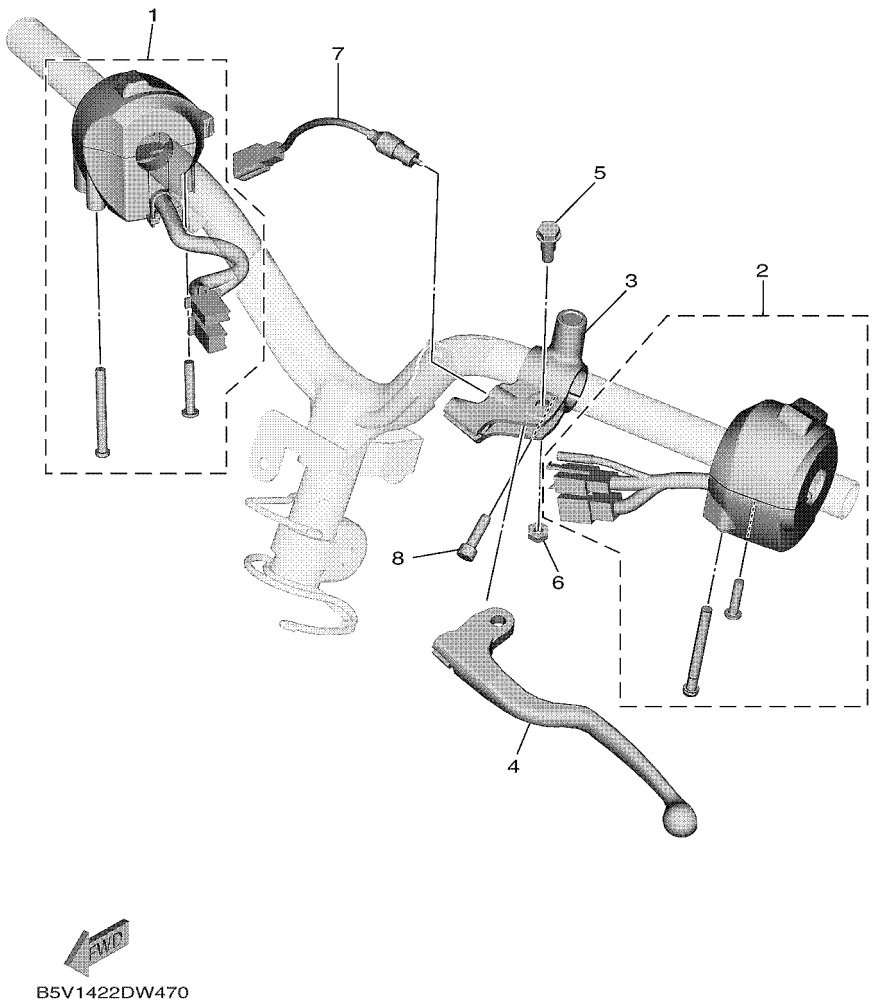

FIG. 40 HANDLE SWITCH & LEVER

REF. NO.	PART NO.	DESCRIPTION	BAX1					REMARKS
1	BAW–H3963–00	SWITCH, HANDLE 3	1					
2	B5V–H3973–00	SWITCH, HANDLE 3	1					
3	55P–H2911–00	HOLDER, LEVER 1	1					
4	B5V–H3912–00	LEVER 1	1					
5	90109–06827	BOLT	1					
6	95607–06100	NUT, SELF-LOCKING	1					
7	55P–H2917–00	SWITCH	1					
8	91337–06020	BOLT	1					

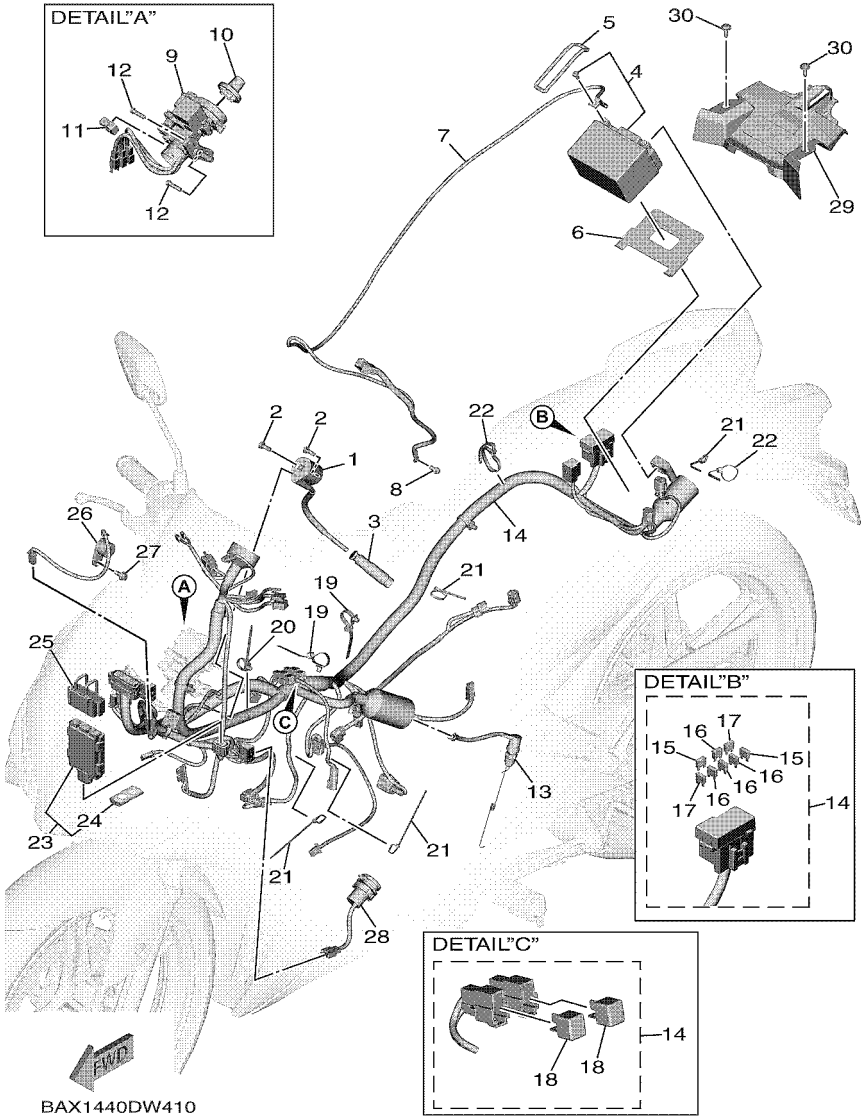

FIG. 41 ELECTRICAL 1

REF. NO.	PART NO.	DESCRIPTION	BAX1					REMARKS
1	B5V–H2310–00	IGNITION COIL ASSY	1					
2	97002–06016	BOLT, HEXAGON	2					
3	B0T–H2370–00	PLUG CAP ASSY	1					
4	55D–H2100–00	BATTERY ASSY (PINACO PTZ5S)	1					
5	5VW–H2131–00	BAND, BATTERY	1					
6	BAX–H2121–00	PAD, BATTERY	1					
7	BAX–H2116–00	WIRE, MINUS LEAD	1					
8	95022–06012	BOLT, FLANGE	1					
9	BAX–H2501–00	MAIN SWITCH STEERING LOCK	1					
10	B63–H276E–01	KNOB COMP.	1					
11	90464–09806	CLAMP	1					
12	90111–06162	BOLT,HEX. SOCKET BUTTON	2					
13	B5V–H2530–00	STOP SWITCH ASSY	1					
14	BAX–H2590–00	WIRE HARNESS ASSY	1					
15	BAX–H2151–20	.FUSE (20A)	2					
16	2BR–H2151–00	.FUSE (10A)	4					
17	BAX–H2151–90	.FUSE (5A)	2					
18	3WP–81980–00	.DIODE ASSY	2					
19	90464–34002	CLAMP	2					
20	90464–36007	CLAMP	1					
21	90464–36800	CLAMP	4					
22	90464–70800	CLAMP	2					
23	BX9–H6260–01	REMOTE CONTROL UNIT ASSY	1					
24	B2T–H6261–00	.XMTR. COMP.	1					
25	B63–H5546–00	BAND	1					
26	B8A–H3383–00	BUZZER	1					
27	95D32–06014	BOLT, FLANGE DEEP RECESS	1					

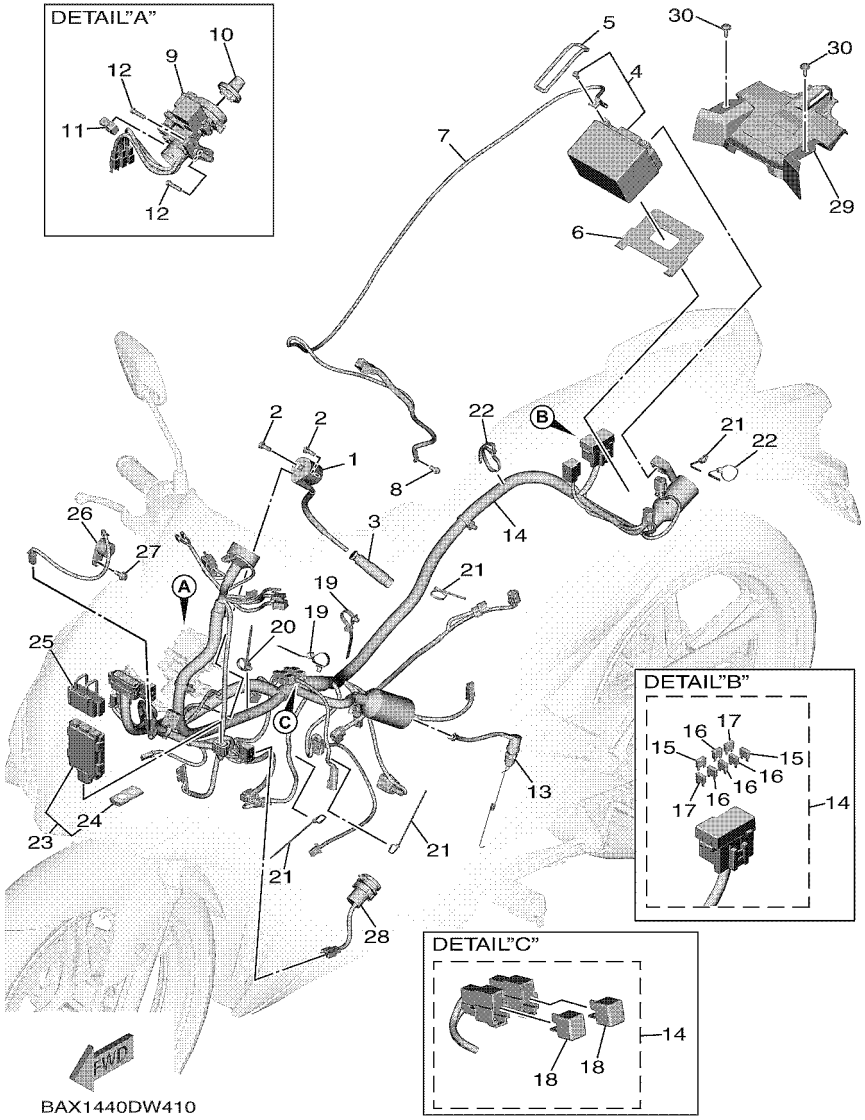

FIG. 41 ELECTRICAL 1

REF. NO.	PART NO.	DESCRIPTION	BAX1					REMARKS
28	BB8–H254B–00	TERMINAL COMP.	1					
29	BAX–F255V–00	PLATE, BATTERY COVER	1					
30	90159–06810	SCREW, WITH WASHER	2					

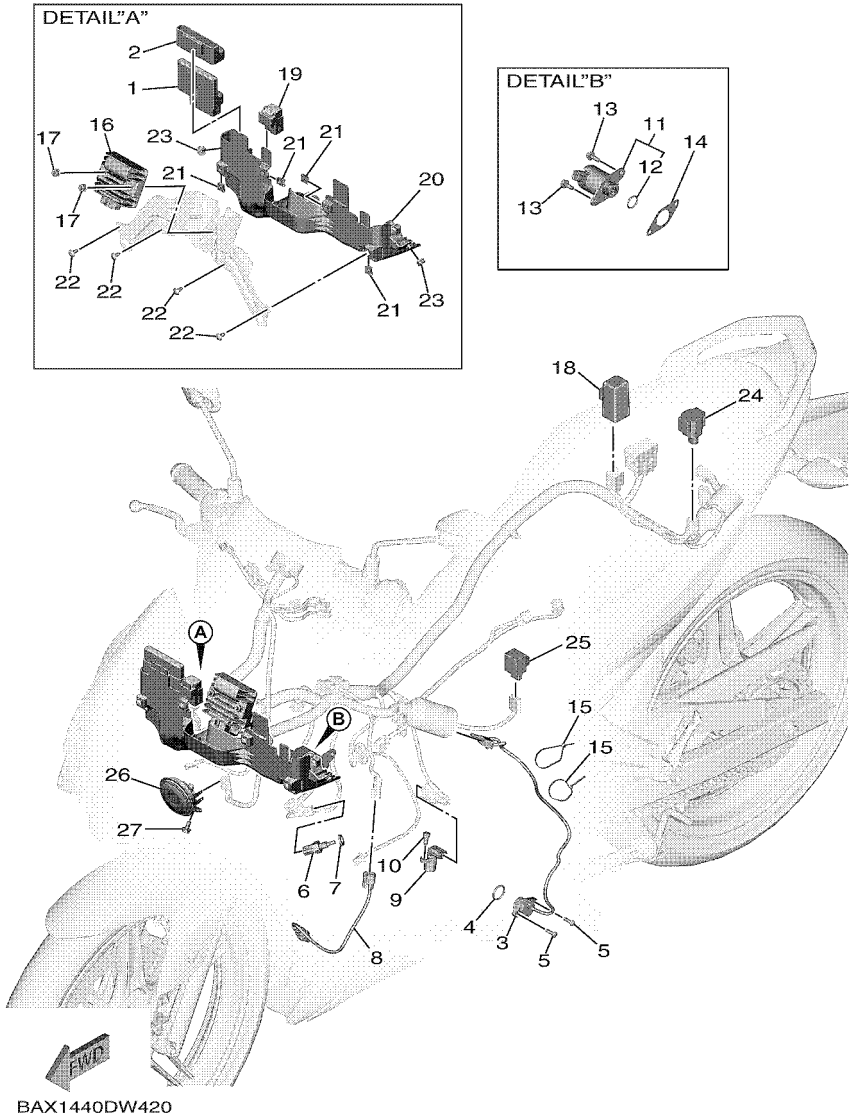

FIG. 42 ELECTRICAL 2

REF. NO.	PART NO.	DESCRIPTION	BAX1					REMARKS
1	BAX–H591A–00	ENGINE CONTROL UNIT ASSY	1					
2	B5V–H5546–00	BAND	1					
3	B5V–H2540–00	NEUTRAL SWITCH ASSY	1					
4	93210–21802	O-RING	1					
5	98502–05016	SCREW,PAN HEAD	2					
6	52B–H3591–00	THERMO UNIT	1					
7	90430–10807	GASKET	1					
8	B5V–H592A–00	SENSOR, OXYGEN	1					
9	2ND–H3755–10	SENSOR, SPEED	1					
10	91312–06014	BOLT, HEXAGON SOCKET HEAD	1					
11	BK6–H6110–00	SOLENOID	1					
12	BK6–H1847–00	.O-RING	1					
13	95D32–06016	BOLT, FLANGE DEEP RECESS	2					
14	BAX–H1861–00	GASKET	1					
15	90464–50800	CLAMP	2					
16	2ND–H1960–10	RECTIFIER & REGULATOR ASSY	1					
17	95702–06500	NUT, FLANGE	2					
18	5TN–H1940–00	STARTER RELAY ASSY	1					
19	BK6–H1950–00	RELAY ASSY	1					
20	BAX–H2154–00	CASE	1					
21	90183–05807	NUT, SPRING	4					
22	97707–50012	SCREW, TRUSS HEAD TAPPING	4					
23	55C–H4759–00	GROMMET	2					
24	1PA–H2576–00	SENSOR, LEAN ANGLE	1					
25	3XV–83350–22	FLASHER RELAY ASSY	1					
26	BAX–H3371–00	HORN	1					
27	95D02–06012	BOLT, FLANGE DEEP RECESS	1					

PART NO.	REF. NO.
52S–12439–00	6 – 2
50C–2536G–00	28 – 18
3GD–25803–00	28 – 7
47X–25824–01	26 – 8
36Y–2589H–00	30 – 9
5BU–27234–00	32 – 15
3WP–81980–00	41 – 18
3XV–83350–22	42 – 25
BAX–E1102–00	1 – 1
BAX–E111F–00	4 – 10
B63–E1133–10	1 – 2
B5V–E1165–00	1 – 8
B5V–E1166–00	8 – 27
B5V–E1169–00	1 – 9
2DP–E1181–00	1 – 20
B63–E1185–01	5 – 4
B5V–E1191–00	1 – 7
B3F–E1193–00	1 – 15
B5V–E1311–00	1 – 24
B5V–E132G–00	1 – 13
BAX–E132G–00	1 – 13
B0T–E1351–00	1 – 25
B5V–E1422–00	2 – 4
BAX–E1454–00	2 – 18
2ND–E1496–00	2 – 13
2ND–E1531–10	2 – 19
2ND–E1536–00	2 – 12
B5V–E1557–00	3 – 10
B5V–E1603–00	2 – 11
B5V–E1631–00	2 – 8
5YP–E1633–00	2 – 9
B5V–E1651–00	2 – 3
BK6–E1681–00	2 – 5
B5V–E2111–01	3 – 1
B63–E2113–00	3 – 4
B63–E2117–01	3 – 6
5TL–E2118–00	3 – 5
B63–E2119–00	3 – 3
B5V–E2121–00	3 – 2
55P–E2126–00	3 – 7
B5V–E2150–00	3 – 8
B5V–E2156–00	3 – 14
BAX–E2156–00	3 – 14
B63–E2157–00	4 – 9
B5V–E2160–01	3 – 13
BAX–E2166–00	3 – 9
B5V–E2166–10	3 – 9
BAX–E2170–00	4 – 1

PART NO.	REF. NO.
2ND–E2210–20	4 – 17
BAX–E2213–00	4 – 19
5MX–E2222–00	4 – 18
BK6–E2226–00	3 – 11
1DR–E2228–00	4 – 15
B63–E2231–00	4 – 13
B5V–E2241–00	4 – 14
BAX–E2256–00	4 – 16
BAX–E2279–00	3 – 12
B3M–E2280–00	4 – 7
B6H–E2288–00	4 – 8
B63–E22A2–00	6 – 11
B5V–E2405–00	6 – 12
BK6–E2410–00	6 – 1
BT3–E2422–00	5 – 1
2DP–E2428–00	5 – 3
B65–E2439–00	6 – 9
B5V–E2443–10	5 – 12
BAX–E244E–00	6 – 17
2DP–E2450–00	5 – 5
B5V–E2461–00	6 – 7
B65–E2462–02	6 – 8
BAX–E2481–00	6 – 20
BAX–E2482–00	6 – 21
B5V–E2483–00	6 – 4
5YP–E2675–00	6 – 13
B65–E2843–00	6 – 10
2ND–E3300–01	7 – 1
2ND–E3324–10	7 – 8
3C1–E3327–00	7 – 13
38B–E3411–00	7 – 4
38B–E3440–01	7 – 7
55C–E3447–00	7 – 9
2FB–E3556–00	8 – 10
BAX–E3557–00	8 – 11
BK6–E3585–00	8 – 1
B5V–E3750–00	8 – 14
BK6–E3761–00	8 – 5
2ND–E3767–10	8 – 13
BK6–E3770–00	8 – 4
B5V–E3907–00	23 – 10
54P–E3915–00	23 – 11
54P–E3938–00	8 – 8
B5V–E3971–00	23 – 16
54P–E4137–00	8 – 9
54P–E4147–00	8 – 6
5CA–E4147–00	8 – 7
BAX–E4199–00	8 – 2

PART NO.	REF. NO.
B5V–E4411–00	8 – 16
B5V–E4412–00	8 – 17
B5V–E4417–00	8 – 31
5WP–E443E–00	8 – 22
B5V–E4450–00	8 – 18
2ND–E4452–00	8 – 20
B5V–E4453–00	8 – 19
BK7–E4613–00	9 – 6
BAX–E4703–00	9 – 1
BAX–E4718–00	9 – 2
B17–E4747–00	31 – 53
BAX–E4799–00	9 – 4
B5V–E4877–00	8 – 24
2ND–E5113–00	11 – 7
BAX–E5150–00	10 – 1
1S8–E5351–00	7 – 3
BAX–E5362–00	11 – 15
BAX–E5411–00	11 – 1
BAX–E5418–10	11 – 8
BAX–E5421–00	11 – 10
B5V–E5441–00	4 – 20
BAX–E5451–00	11 – 2
BAX–E5461–00	11 – 11
B17–E5514–00	12 – 1
1S8–E5521–00	12 – 2
2ND–E5524–01	12 – 3
2PV–E5572–00	12 – 9
2PV–E5580–00	12 – 6
2PH–E5583–10	12 – 7
1ST–E5614–00	12 – 8
2ND–E6111–00	13 – 1
2ND–E6111–10	13 – 1
2ND–E6144–00	13 – 20
B5V–E6150–00	13 – 5
2ND–E6154–00	13 – 6
55P–E6193–00	13 – 2
2ND–E6321–00	13 – 8
B5V–E6321–00	13 – 10
B5V–E6324–00	13 – 12
B5V–E6325–00	13 – 11
B5V–E6331–00	13 – 9
BK6–E6333–00	13 – 14
B5V–E6337–00	13 – 17
2ND–E6344–00	13 – 21
B5V–E6345–00	13 – 25
B5V–E6351–00	13 – 13
B5V–E6352–00	13 – 16
B5V–E6356–00	13 – 19

PART NO.	REF. NO.
2ND–E6357–00	13 – 26
B5V–E6358–00	13 – 18
B5V–E6371–00	13 – 7
B5V–E6380–00	13 – 24
B5V–E6647–00	13 – 4
BK6–E6774–00	13 – 15
55P–E7211–00	14 – 7
B5V–E7221–00	14 – 15
B5V–E7231–00	14 – 13
B5V–E7241–00	14 – 12
B5V–E7251–00	14 – 9
B5V–E7261–00	14 – 14
B5V–E7410–00	14 – 1
B5V–E7421–00	14 – 6
1S8–E7456–00	14 – 23
16S–E7471–00	14 – 4
B5V–E8101–00	16 – 4
BAX–E8110–00	16 – 9
5HU–E8113–00	16 – 10
B5V–E8140–00	16 – 1
BK7–E8185–00	15 – 2
B5V–E8337–00	16 – 3
2ND–E8511–00	15 – 7
2ND–E8512–00	15 – 8
2ND–E8513–00	15 – 9
2ND–E8531–00	15 – 10
B5V–E8540–00	15 – 1
3S4–E8542–00	15 – 5
BAX–F1110–00	17 – 1
B17–F113J–00	21 – 12
B17–F113K–00	21 – 16
BAX–F117K–00	18 – 12
B5V–F1315–00	17 – 8
BAX–F133F–00	32 – 20
BAX–F137U–01	33 – 20
BAX–F137V–01	33 – 32
B17–F1511–10–P1	18 – 1
B17–F1511–10–P4	18 – 1
B17–F1511–10–P5	18 – 1
B17–F1513–00	18 – 2
B17–F1514–00	18 – 3
BAX–F1552–01	33 – 45
B17–F1568–00	33 – 1
BAX–F1611–00	18 – 6
BAX–F1629–00	18 – 15
BAX–F164F–00	18 – 20
B17–F1650–00	20 – 6
B17–F1668–10	20 – 12

PART NO.	REF. NO.
BAX–F1711–00	19 – 1
BAX–F1717–00	29 – 17
BAX–F171E–00	19 – 19
BAX–F1721–00	19 – 6
BAX–F172G–00–P0	33 – 53
BAX–F172G–00–P1	33 – 53
BAX–F172G–00–P2	33 – 53
BAX–F172H–00–P0	33 – 59
BAX–F172H–00–P1	33 – 59
BAX–F172H–00–P2	33 – 59
BAX–F172L–00	19 – 27
BAX–F1731–00–P0	19 – 11
BAX–F1731–00–P1	19 – 11
BAX–F1731–00–P2	19 – 11
BAX–F173E–00	19 – 30
BAX–F173E–10	19 – 30
BAX–F173E–20	19 – 30
BAX–F173F–00	19 – 31
BAX–F173F–10	19 – 31
BAX–F173F–20	19 – 31
BAX–F1741–00–P0	19 – 15
BAX–F1741–00–P1	19 – 15
BAX–F1741–00–P2	19 – 15
BAX–F174G–00	19 – 32
BAX–F174G–10	19 – 32
BAX–F174G–20	19 – 32
BAX–F1816–00	19 – 28
BAX–F1817–00	19 – 29
B5V–F1871–00	19 – 24
1S9–F1875–00	19 – 26
BAX–F2100–00	20 – 1
5B9–F2123–00	20 – 2
B17–F2151–10	20 – 3
BAX–F2167–00	28 – 3
BAX–F2174–00	27 – 21
B17–F2210–30	20 – 9
BAX–F2328–00	18 – 19
BAX–F255V–00	41 – 29
BAX–F3102–00	22 – 1
BAX–F3103–00	22 – 16
BAX–F3110–00	22 – 5
	22 – 20
BAX–F3111–00	22 – 13
	22 – 28
B17–F3126–00	22 – 2
BAX–F3136–00	22 – 17
BAX–F3141–00	22 – 12
	22 – 27

PART NO.	REF. NO.
5LL–F3144–00	22 – 11
	22 – 26
4UV–F3145–00	22 – 3
	22 – 18
2JG–F3147–00	22 – 14
	22 – 29
5TF–F3152–00	22 – 8
	22 – 23
31D–F3153–00	22 – 15
	22 – 30
5P0–F3156–00	22 – 4
	22 – 19
BAX–F3157–00	22 – 7
	22 – 22
509–F3158–L0	22 – 9
	22 – 24
BAX–F3170–00	22 – 6
	22 – 21
31D–F3181–50	22 – 10
	22 – 25
BAX–F3340–00	22 – 31
31D–F3346–00	22 – 33
BAX–F3391–00–P0	33 – 7
BAX–F3391–00–P1	33 – 7
BAX–F3391–00–P2	33 – 7
4FP–F3411–10	22 – 32
4RT–F3411–10	21 – 4
1KL–F3412–10	21 – 1
4RT–F3412–10	21 – 3
5P1–F3416–00	21 – 6
1P6–F341E–10	21 – 5
5VL–F341E–10	21 – 2
BAX–F4110–00	23 – 1
1FC–F412G–00	23 – 3
1DB–F414G–01	23 – 13
BAX–F41B1–00	23 – 20
1FC–F4339–00	23 – 5
BAX–F4491–00	23 – 14
4YY–F4610–00	23 – 18
4YY–F4612–00	23 – 19
B5V–F465E–00	18 – 11
BAX–F470F–10	24 – 2
BAX–F470F–20	24 – 2
BAX–F471A–00	24 – 7
2WB–F4727–00	24 – 8
BAX–F4730–10	24 – 1
BAX–F4730–20	24 – 1
BAX–F4741–00	24 – 4

PART NO.	REF. NO.
1VP–F4741–10	24 – 3
BAX–F4741–10	24 – 5
55C–F4742–00	32 – 16
BAX–F4747–00	24 – 6
BAX–F4773–00–P0	24 – 13
BAX–F4773–00–P2	24 – 13
BAX–F4773–00–P4	24 – 13
B5V–F4780–00	24 – 9
BAX–F478E–00	24 – 11
BAX–F478X–00	17 – 2
B5V–F479D–00	24 – 12
BAX–F482H–00	18 – 23
B17–F5168–10–33	25 – 1
B6A–F5181–00	25 – 8
BAX–F51G1–00	25 – 10
	27 – 25
BAX–F51G1–10	25 – 10
	27 – 25
BAX–F51G1–20	25 – 10
	27 – 25
BAX–F51G2–00	25 – 11
	27 – 26
BAX–F51G2–10	25 – 11
	27 – 26
BAX–F51G2–20	25 – 11
	27 – 26
B17–F5317–00	27 – 2
B17–F5338–10–33	27 – 1
B17–F5364–00	27 – 4
B17–F5366–00	27 – 6
B17–F5377–00	27 – 7
4NP–F5381–00	20 – 4
B5V–F5381–00	27 – 16
B17–F5383–00	27 – 23
BAX–F5388–00	27 – 20
BAX–F5446–00	27 – 10
BAX–F5689–00	27 – 13
3C1–F5802–00	26 – 4
50C–F5802–00	28 – 6
3C1–F5803–50	26 – 5
B5V–F5805–00	26 – 15
1PA–F5806–00	28 – 11
2ND–F5808–00	32 – 2
5P0–F580A–00	30 – 6
2ND–F580E–00	32 – 1
B5V–F580U–00	26 – 3
1PA–F580W–01	28 – 5
2NL–F5825–00	26 – 9

PART NO.	REF. NO.
50C–F5827–00	28 – 12
50C–F5828–00	28 – 13
50C–F582A–50	32 – 5
B5V–F582U–01	26 – 1
B17–F582W–00	28 – 1
B5V–F583T–00	30 – 4
2ND–F5852–00	30 – 8
50C–F5852–00	32 – 9
2ND–F5854–00	30 – 7
2VN–F5854–00	32 – 11
2ND–F5855–00	30 – 11
50C–F5855–00	32 – 10
50C–F5866–00	32 – 6
5TL–F5867–11	30 – 12
2ND–F5870–00	30 – 5
B5V–F5872–00	30 – 1
B5V–F5873–00	32 – 26
B17–F5876–00	21 – 10
B5V–F587A–00	21 – 8
BAX–F5888–00	32 – 18
3RW–F5889–00	30 – 10
50C–F5894–11	32 – 8
4S3–F5895–00	32 – 13
50C–F589A–00	32 – 14
50C–F5914–00	28 – 10
50C–F5916–00	28 – 20
50C–F5917–00	28 – 15
5YP–F5917–00	26 – 6
50C–F5919–00	28 – 8
5P0–F5919–01	26 – 10
1DB–F5921–01	26 – 13
1PA–F5921–01	28 – 16
5YP–F5924–00	26 – 11
5YP–F5925–01	26 – 12
50C–F5933–00	28 – 19
50C–F5937–00	28 – 14
5YP–F5937–00	26 – 7
5YP–F5939–00	26 – 14
50C–F5961–00	28 – 17
BAX–F60C1–00	29 – 33
BAX–F60C1–10	29 – 33
BAX–F60C1–20	29 – 33
BAX–F60C2–00	29 – 34
BAX–F60C2–10	29 – 34
BAX–F60C2–20	29 – 34
BAX–F6110–00	29 – 1
BAX–F6143–00	29 – 5
BAX–F6145–00	29 – 10

PART NO.	REF. NO.
1S8–F6199–00	29 – 14
	33 – 27
	33 – 40
BAX–F61AA–00–P0	29 – 16
BAX–F61AA–00–P1	29 – 16
BAX–F61AA–00–P2	29 – 16
1S8–F622F–00	29 – 28
BAX–F622H–00	29 – 27
B17–F6240–02	29 – 19
1VP–F6241–00	29 – 20
BAX–F6246–00	29 – 25
16S–F6257–00	29 – 26
55C–F6259–00	32 – 17
B17–F6280–10	29 – 21
B17–F6290–10	29 – 22
BAX–F6301–00	29 – 23
BAX–F6335–00	29 – 30
B17–F7111–10	31 – 1
5YP–F7112–00	31 – 3
31D–F7114–00	31 – 2
BAX–F7211–00	31 – 9
50C–F7222–00	32 – 4
BAX–F7311–00	31 – 12
BAX–F7411–00	31 – 17
B17–F7413–00	31 – 20
	31 – 27
B5V–F741E–00	31 – 21
	31 – 28
B17–F7430–00–P0	31 – 33
3C1–F7431–01	31 – 35
B17–F7437–00	31 – 40
	31 – 50
B17–F7440–00–P0	31 – 43
3C1–F7441–01	31 – 45
BAX–F7451–00	31 – 19
B17–F7452–00–P0	31 – 34
BAX–F7461–00	31 – 26
B17–F7462–00–P0	31 – 44
B17–F814F–00	24 – 17
B17–F8152–00	24 – 16
55C–F815P–00	8 – 33
B17–F816B–00	24 – 15
BAX–F8322–00	33 – 36
BAX–F8328–00	33 – 61
BAX–F8338–00	33 – 62
B5V–F8344–00	33 – 3
BAX–F834C–00	33 – 69
BAX–F834C–10	33 – 69

PART NO.	REF. NO.
BAX–F834C–20	33 – 69
BAX–F835U–00–P0	33 – 18
BAX–F835U–00–P1	33 – 18
BAX–F835U–00–P2	33 – 18
BAX–F835V–00–P0	33 – 30
BAX–F835V–00–P1	33 – 30
BAX–F835V–00–P2	33 – 30
BAX–F8365–00	33 – 15
B17–F836B–30	33 – 60
BAX–F836K–00	33 – 2
BAX–F836L–00	33 – 9
1S8–F8372–00	23 – 8
BAX–F837D–00–P0	33 – 43
BAX–F837D–00–P1	33 – 43
BAX–F837D–00–P2	33 – 43
BAX–F8385–00	33 – 23
BAX–F8395–00	33 – 35
BAX–F8398–00	33 – 63
BAX–F8398–10	33 – 63
BAX–F8398–20	33 – 63
BAX–F8399–00	33 – 64
BAX–F8399–10	33 – 64
BAX–F8399–20	33 – 64
BAX–F839A–00	33 – 65
BAX–F839A–10	33 – 65
BAX–F839A–20	33 – 65
BAX–F839E–00	33 – 66
BAX–F839E–10	33 – 66
BAX–F839E–20	33 – 66
BAX–F83GE–00	33 – 67
BAX–F83GE–10	33 – 67
BAX–F83GE–20	33 – 67
BAX–F83GF–00	33 – 68
BAX–F83GF–10	33 – 68
BAX–F83GF–20	33 – 68
BAX–F842M–00–P0	33 – 48
BAX–F842M–00–P1	33 – 48
BAX–F842M–00–P2	33 – 48
BAX–F842N–00–P0	33 – 54
BAX–F842N–00–P1	33 – 54
BAX–F842N–00–P2	33 – 54
BAX–F843J–00	33 – 14
B5V–H1410–00	34 – 2
2ND–H1450–02	34 – 1
2BM–H1801–00	35 – 2
5D9–H1828–00	35 – 5
1FC–H183G–00	35 – 3
BK6–H1847–00	42 – 12

PART NO.	REF. NO.
5D9–H1861–00	35 – 4
BAX–H1861–00	42 – 14
2ND–H1890–02	35 – 1
5TN–H1940–00	42 – 18
BK6–H1950–00	42 – 19
2ND–H1960–10	42 – 16
55D–H2100–00	41 – 4
BAX–H2116–00	41 – 7
BAX–H2121–00	41 – 6
5VW–H2131–00	41 – 5
2BR–H2151–00	41 – 16
BAX–H2151–20	41 – 15
BAX–H2151–90	41 – 17
BAX–H2154–00	42 – 20
B5V–H2310–00	41 – 1
B0T–H2370–00	41 – 3
BAX–H2501–00	41 – 9
B5V–H2530–00	41 – 13
B5V–H2540–00	42 – 3
BB8–H254B–00	41 – 28
1PA–H2576–00	42 – 24
BAX–H2590–00	41 – 14
B63–H276E–01	41 – 10
55P–H2911–00	40 – 3
55P–H2917–00	40 – 7
B5V–H3310–00	36 – 1
2CB–H3311–00	36 – 2
	36 – 4
55D–H3311–00	36 – 7
	36 – 14
1VP–H3318–00	36 – 20
B5V–H3320–00	36 – 3
55D–H3323–00	36 – 9
55D–H332M–00	36 – 16
BAX–H3330–00	36 – 6
55D–H3333–00	36 – 11
	36 – 18
55D–H333A–00	36 – 8
BAX–H333E–00	36 – 10
BAX–H3340–00	36 – 13
55D–H334A–00	36 – 15
BAX–H334E–00	36 – 17
55D–H3358–00	36 – 12
	36 – 19
BAX–H3371–00	42 – 26
B8A–H3383–00	41 – 26
B5V–H3500–00	37 – 1
B5V–H3571–00	37 – 2

PART NO.	REF. NO.
52B–H3591–00	42 – 6
2ND–H3755–10	42 – 9
B5V–H3912–00	40 – 4
2ND–H3922–00	30 – 13
BAW–H3963–00	40 – 1
B5V–H3973–00	40 – 2
B6H–H3980–00	30 – 16
BAX–H4118–00	38 – 9
B5V–H4310–00	38 – 1
B5V–H431A–00	38 – 4
BAX–H4516–00	39 – 9
BXA–H4547–00	39 – 6
B5V–H4710–00	39 – 1
BAX–H4740–00	39 – 4
B17–H4744–00	39 – 5
55C–H4759–00	42 – 23
2FC–H5111–00	21 – 13
	21 – 17
55D–H5130–00	39 – 8
B5V–H5546–00	42 – 2
B63–H5546–00	41 – 25
B5V–H5752–00	23 – 12
BAX–H591A–00	42 – 1
B5V–H592A–00	42 – 8
BK6–H6110–00	42 – 11
BX9–H6260–01	41 – 23
B2T–H6261–00	41 – 24
50C–W0048–00	28 – 9
B5V–WE140–00	2 – 1
90101–08829	31 – 13
90105–088H9	1 – 17
90105–088J0	1 – 16
90105–10896	29 – 2
90105–108A6	26 – 16
90105–108B4	17 – 6
90105–108B8	20 – 10
90109–06202	8 – 26
	18 – 7
	19 – 2
	19 – 7
90109–06279	16 – 2
90109–06577	30 – 15
90109–06827	40 – 5
90109–068A4	18 – 4
90109–068B4	19 – 25
90109–08087	26 – 2
	28 – 2
90110–06846	8 – 15

PART NO.	REF. NO.
90110–06873	12 – 10
90110–06894	1 – 23
90111–05049	29 – 15
90111–05808	7 – 2
90111–05817	29 – 18
90111–06162	41 – 12
90111–06807	9 – 3
	9 – 5
90111–06815	33 – 26
	33 – 39
90111–06848	33 – 10
90116–08826	27 – 11
90119–06155	20 – 7
90119–06810	38 – 10
90123–08046	29 – 31
90149–05801	1 – 10
90151–06818	15 – 4
90159–06810	41 – 30
90160–05009	19 – 3
	19 – 8
	19 – 13
	19 – 17
	19 – 23
	29 – 11
	33 – 6
	33 – 12
	33 – 47
	33 – 50
	33 – 56
90160–05012	8 – 32
	29 – 4
	37 – 4
	38 – 3
	38 – 8
90160–05018	18 – 18
90163–05803	8 – 21
90170–08401	29 – 32
90170–10012	2 – 25
90170–14801	13 – 23
90179–10805	17 – 7
90179–25002	21 – 7
90183–05061	29 – 8
90183–05807	18 – 9
	19 – 12
	19 – 16
	19 – 21
	29 – 12
	33 – 8

PART NO.	REF. NO.
90183–05807	33 – 13
	33 – 17
	33 – 19
	33 – 22
	33 – 31
	33 – 34
	33 – 44
	33 – 46
	33 – 51
	33 – 57
	38 – 2
	39 – 2
	42 – 21
90183–06800	18 – 14
	18 – 16
90185–05803	21 – 14
	21 – 18
90185–10011	29 – 3
90201–06880	6 – 16
90201–08043	31 – 42
	31 – 52
90201–08066	32 – 24
90201–08612	9 – 8
90201–08859	1 – 18
90201–10118	30 – 3
	32 – 28
90201–12019	13 – 3
	34 – 6
90201–14811	31 – 7
90201–15030	27 – 18
90201–15821	2 – 14
90201–173F4	14 – 18
90201–22793	14 – 16
90201–25290	12 – 5
90208–20003	13 – 31
90209–18208	14 – 10
90214–10800	2 – 15
90215–10803	2 – 24
90215–14802	13 – 22
90240–08005	32 – 23
90269–06816	19 – 14
	19 – 18
	29 – 6
	29 – 13
	33 – 11
	33 – 16
	33 – 29
	33 – 42

PART NO.	REF. NO.
90269–06816	33 – 52
	33 – 58
90280–03017	2 – 7
90282–05031	2 – 23
90340–12813	1 – 3
90340–14824	11 – 5
90387–06144	6 – 19
90387–06158	38 – 6
90387–08812	31 – 54
90387–08820	31 – 15
90387–08850	18 – 21
90387–09801	33 – 25
	33 – 38
90387–10277	25 – 7
90387–15810	2 – 20
90387–15830	27 – 19
90387–17804	14 – 8
90401–10812	30 – 2
	32 – 27
90430–06803	1 – 5
	1 – 27
	5 – 9
90430–10807	42 – 7
90445–22800	31 – 6
90446–15386	31 – 11
90450–43805	8 – 30
90464–09806	41 – 11
90464–10008	23 – 17
90464–16012	20 – 8
90464–34002	41 – 19
90464–36007	41 – 20
90464–36800	41 – 21
90464–50800	42 – 15
90464–70800	41 – 22
90467–11019	8 – 23
90467–11825	8 – 28
90467–12052	8 – 29
90467–12085	32 – 12
90467–19803	6 – 5
	6 – 22
90467–20806	6 – 6
90467–22802	8 – 25
90480–01803	6 – 15
90480–01821	19 – 5
	19 – 10
90480–01870	38 – 11
90480–13398	33 – 5
90480–14023	38 – 5

PART NO.	REF. NO.
90480–15808	6 – 14
90480–18418	33 – 24
	33 – 37
90501–06022	15 – 6
90501–06800	15 – 11
90501–12743	31 – 37
	31 – 47
90501–16800	2 – 16
90501–18576	7 – 5
90506–20041	31 – 10
90506–26814	31 – 16
90506–35806	31 – 5
90508–183B9	31 – 23
	31 – 30
90508–32837	16 – 5
90520–02014	29 – 7
90520–02859	23 – 9
90520–05028	23 – 6
90520–08007	23 – 7
90520–15012	19 – 20
90520–15013	18 – 10
90560–07007	23 – 4
90560–10292	25 – 2
91312–05016	3 – 15
91312–06014	42 – 10
91312–06020	8 – 3
91312–08020	16 – 11
91312–08025	31 – 41
	31 – 51
91317–06025	30 – 17
91317–06030	29 – 29
91317–08016	32 – 22
91317–08020	32 – 21
91332–05010	23 – 15
91332–06016	34 – 4
91332–06025	34 – 3
91337–06020	40 – 8
91401–20012	32 – 25
91401–25015	31 – 25
	31 – 32
	31 – 39
	31 – 49
91401–30030	31 – 4
	31 – 8
91701–08035	31 – 24
	31 – 31
91702–08042	31 – 36
	31 – 46

PART NO.	REF. NO.
91810–07804	4 – 4
91810–14808	1 – 21
	1 – 22
	10 – 2
	11 – 3
	11 – 12
92012–05012	29 – 24
93101–10843	11 – 17
93102–08800	1 – 14
93102–12808	16 – 8
93102–12810	13 – 29
93102–22827	14 – 21
93103–10801	5 – 2
93106–20816	25 – 3
93106–22808	27 – 5
93106–26815	27 – 8
93210–09807	4 – 3
93210–14899	11 – 6
93210–15620	32 – 7
93210–19809	5 – 14
	11 – 16
93210–21802	42 – 4
93210–26806	35 – 6
93210–34804	7 – 6
93210–39803	5 – 11
93210–54808	7 – 12
93306–000Y3	5 – 7
93306–001YL	4 – 6
93306–004XV	27 – 9
93306–054XF	14 – 2
93306–203XR	14 – 19
93306–252X7	27 – 3
93306–253YM	2 – 21
	2 – 22
93306–272YC	14 – 20
93306–300YN	25 – 4
93306–355Y8	2 – 6
93306–906X4	4 – 2
93310–325YC	12 – 4
93310–526YT	2 – 2
93315–112Y9	13 – 28
933A6–202X0	14 – 3
93410–22039	14 – 11
	14 – 17
93450–15175	2 – 10
93501–04823	31 – 38
	31 – 48
93505–16844	13 – 27

PART NO.	REF. NO.
93604–06083	4 – 5
93604–08071	2 – 17
93604–10011	15 – 3
93608–30839	16 – 7
93822–14800	14 – 22
93900–00817	25 – 6
	27 – 15
94109–17809	25 – 5
94112–17809	27 – 14
94568–J9096	4 – 12
94568–K8124	27 – 24
94700–00415	1 – 19
95022–06012	24 – 10
	41 – 8
95022–06014	18 – 17
95022–06020	18 – 13
95027–06020	5 – 8
95301–08700	32 – 3
95302–06600	27 – 22
95602–06100	30 – 14
95602–06200	18 – 22
95602–08200	27 – 12
	31 – 14
95602–10200	20 – 11
	25 – 9
95602–14200	27 – 17
95607–06100	40 – 6
95612–08635	1 – 6
95614–12100	20 – 5
95702–06500	38 – 7
	42 – 17
95702–08500	9 – 7
95702–12500	34 – 5
95812–06030	8 – 12
95812–10020	17 – 4
95817–10025	17 – 5
95D02–06012	17 – 3
	21 – 9
	21 – 11
	21 – 15
	42 – 27
95D32–06014	41 – 27
95D32–06016	42 – 13
95D32–06020	24 – 14
95D32–06025	6 – 18
	23 – 2
95D32–08016	31 – 18
95D32–08035	9 – 9

PART NO.	REF. NO.
95D32–10035	28 – 4
95E32–06010	1 – 4
	1 – 26
	14 – 24
95E32–06012	7 – 14
95E32–06014	4 – 11
95E32–06016	11 – 9
95E32–06020	6 – 3
	7 – 10
95E32–06025	4 – 21
	5 – 13
95E32–06030	1 – 11
95E32–06040	10 – 6
	11 – 4
	11 – 13
95E32–06045	10 – 4
95E32–06050	11 – 14
95E32–06055	10 – 3
95E32–06070	10 – 5
95E32–06080	7 – 11
95E32–06090	11 – 18
97002–06016	41 – 2
97022–06012	18 – 5
97602–04312	30 – 18
97602–05225	31 – 22
	31 – 29
97702–30016	37 – 3
97707–50012	18 – 8
	19 – 4
	19 – 9
	19 – 22
	29 – 9
	33 – 28
	33 – 41
	39 – 3
	42 – 22
97707–50016	33 – 4
	33 – 21
	33 – 33
	33 – 49
	33 – 55
	36 – 5
98502–05016	42 – 5
98507–06025	32 – 19
98512–06012	14 – 5
98907–04016	39 – 7
99002–10600	16 – 6
99009–10400	5 – 6
99009–20500	13 – 30
99530–08012	1 – 12
	5 – 10