YAMAHA

PARTS CATALOGUE

PGD

DPBMC

MTN250-A (BDA2) MALAYSIA

YAMAHA GENUINE Parts & Accessories

1WBDA-440E1

( )

MTN250-A
PARTS CATALOGUE
©2021 by Yamaha Motor Co., Ltd.
1st edition, January 2021
All rights reserved.
Any reprinting or unauthorized use
without the written permission of
Yamaha Motor Co., Ltd.
is expressly prohibited.
Printed in Japan.

FOREWORD

This Parts Catalogue is related to the parts for the model(s) on the cover page. When you are ordering replacement parts, please refer to this Parts Catalogue and quote both part numbers and part names correctly.

1. Modifications or additions which have been made after the issue of the Parts Catalogue will be announced in the Parts News.
   It is advisable that you make the necessary corrections to the Parts Catalogue according to the Parts News.

2. Abbreviations
   The following abbreviations are used in this Parts Catalogue.

   "UR" Use specified parts number.

   "UN" Use as many as needed.

   "AP" Alternate Parts

   "LM" Locally Made (Parts need to be ordered locally)

   "F#" Frame No. (Applicable machine No.)

   "O/S" Over Size

3. The number of components for assembly
   - Parts, which are to be supplied in an assembly, are listed with a dot (.) in front of the part name as shown below.
   - The numeral appearing to the right of each component part indicates the quantity of parts for each assembly unit.

PART NO.	DESCRIPTION	Q'TY	REMARKS
2F5–83310–60	FRONT FLASHER LIGHT ASSY	2	
115–83311–60	.BULB (6V–18W)	1	

4. Applicable colours of graphics are represented in the "REMARKS" as shown below.

PART NO.	DESCRIPTION	Q'TY	REMARKS
2N4–24110–00–X5	FUEL TANK COMP.	2	MXR
3J1–24240–10	.GRAPHIC, FUEL TANK	1	FOR MXR

5. Note that the illustrations for reference in finding parts numbers are not to be used for assembling. When assembling, please use the applicable service manual.

6. The asterisk (*) before a reference number indicates modified items after the first edition.

7. Applicable Serial No.

Frame Serial No.

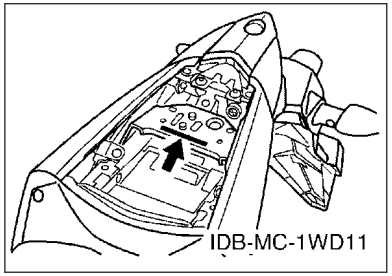

Engine Serial No.

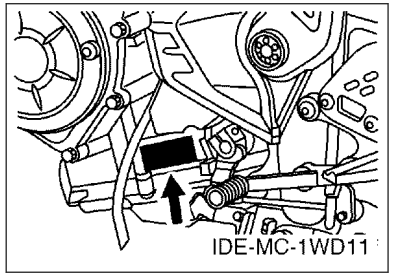

8. Applicable Colour Code (The (*) mark shows Model colour.)

Abbreviation	Colour Name	Colour Code
DPBM15	DEEP PURPLISH BLUE METALLIC 15	1329
DPBMC(*)	DEEP PURPLISH BLUE METALLIC C	0564
MBL2	MAT BLACK 2	0582
MBNM3	MAT BLUISH GRAY METALLIC 3	1758
MDNM8	MAT DARK GRAY METALLIC 8	1654
PGD(*)	PASTEL DARK GRAY	003E
VYRS6	VIVID YELLOWISH RED SOLID 6	1699

9. Applicable Starting Serial No.

Frame Serial No.

Serial No.	Name Of Q'ty Column	Model Code
	BDA2	BDA2

Engine Serial No.

Serial No.	Name Of Q'ty Column	Model Code
	BDA2	BDA2

CONTENTS

ENGINE

CYLINDER HEAD....1
CRANKSHAFT & PISTON....3
VALVE....5
CAMSHAFT & CHAIN....7
WATER PUMP....8
RADIATOR & HOSE....9
OIL PUMP....11
INTAKE....12
EXHAUST....14
CRANKCASE....15
CRANKCASE COVER 1....16
STARTER CLUTCH....17
CLUTCH....18
TRANSMISSION....19
SHIFT CAM & FORK....21
SHIFT SHAFT....22

CHASSIS

FRAME....23
FENDER....25
SIDE COVER....27
REAR ARM & SUSPENSION....30
STEERING....31
FRONT FORK....32
FUEL TANK....34
FUEL TANK 2....36
SEAT....39
FRONT WHEEL....40
FRONT BRAKE CALIPER....41
REAR WHEEL....42
REAR BRAKE CALIPER....44
STEERING HANDLE & CABLE....45
FRONT MASTER CYLINDER....46
STAND & FOOTREST....48
REAR MASTER CYLINDER....50
GENERATOR....52
STARTING MOTOR....53
FLASHER LIGHT....54
METER....55
HEADLIGHT....56
TAILLIGHT....58
HANDLE SWITCH & LEVER....59
ELECTRICAL 1....60
ELECTRICAL 2....62
ELECTRICAL 3....64

INDEX

NUMERICAL INDEX....65

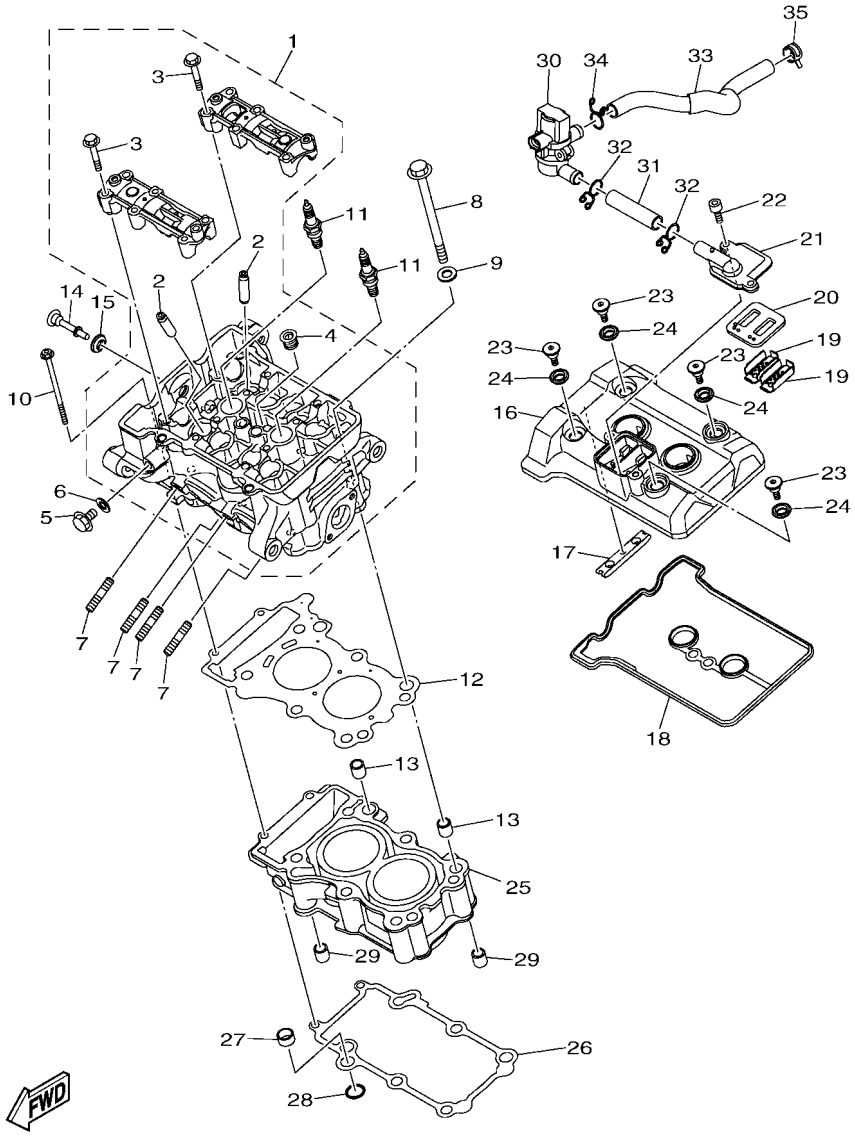

B1E1010-T010

FIG. 1 CYLINDER HEAD

REF. NO.	PART NO.	DESCRIPTION	BDA2					REMARKS
1	BS8–E1102–10	CYLINDER HEAD ASSY	1					
2	1WD–E1133–10	.GUIDE, VALVE 1	8					
3	90105–06027	.BOLT, FLANGE	12					
4	90340–18002	.PLUG, STRAIGHT SCREW	1					
5	95022–08012	BOLT, FLANGE	1					
6	90430–08119	GASKET	1					
7	95612–08625	BOLT, STUD	4					
8	1WD–E1361–00	BOLT, CYLINDER HOLDING 1	6					
9	90201–10845	WASHER, PLATE	6					
10	90110–06870	BOLT, HEXAGON SOCKET HEAD	2					
11	94700–00436	PLUG, SPARK (NGK LMAR8A-9)	2					
12	BS8–E1181–00	GASKET, CYLINDER HEAD 1	1					
13	99530–14016	PIN, DOWEL	2					
14	90109–06898	BOLT	1					
15	1WD–E111G–00	RUBBER, MOUNT 1	1					
16	1WD–E1191–00	COVER, CYLINDER HEAD 1	1					MBL2
17	1WD–E2241–00	GUIDE, STOPPER 2	1					
18	1WD–E1193–00	GASKET, HEAD COVER 1	1					
19	5VY–1482K–00	PLATE	2					
20	1WD–E4890–00	REED VALVE ASSY	1					
21	1WD–E4899–00	CAP, CASE	1					
22	91332–06020	BOLT	2					
23	90109–06899	BOLT	4					
24	1WD–E111G–00	RUBBER, MOUNT 1	4					
25	1WD–E1311–10	CYLINDER 1	1					
26	B1X–E1351–00	GASKET, CYLINDER	1					
27	5NL–12564–00	PIPE, WATER	1					

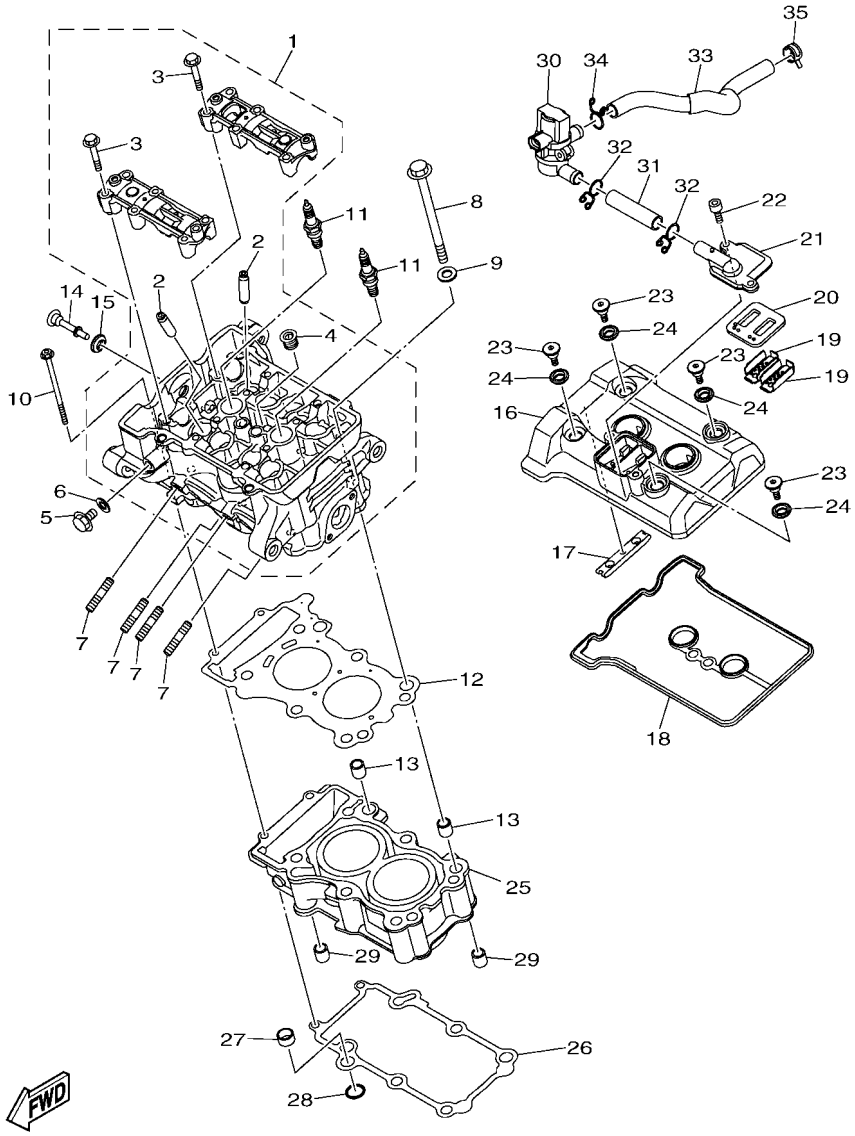

B1E1010-T010

FIG. 1 CYLINDER HEAD

REF. NO.	PART NO.	DESCRIPTION	BDA2					REMARKS
28	93210–16716	O-RING	1					
29	99530–14016	PIN, DOWEL	2					
30	1WD–E4840–00	AIR CUT VALVE ASSY	1					
31	1WD–E4881–00	HOSE, BEND 1	1					
32	90467–16801	CLIP	2					
33	1WD–E4882–01	HOSE, BEND 2	1					
34	90467–16801	CLIP	1					
35	90467–16800	CLIP	1					

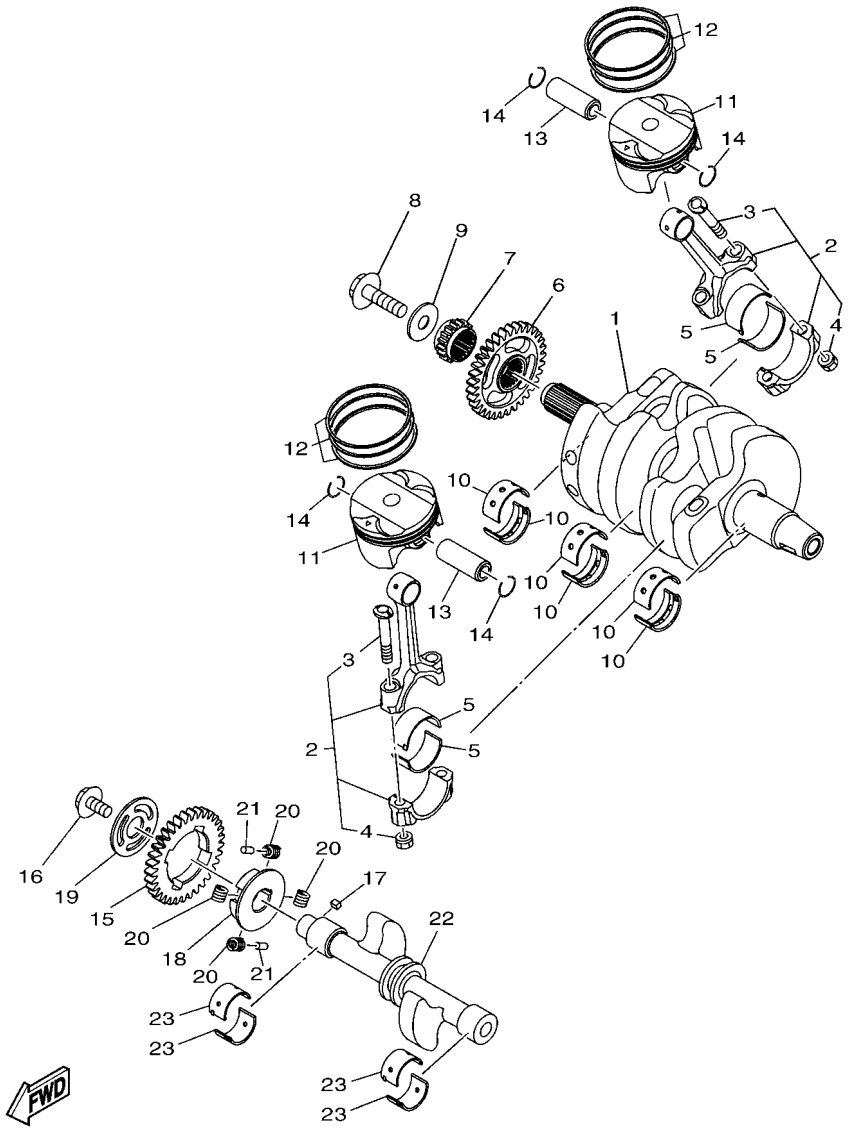

B1E1010-T020

FIG. 2 CRANKSHAFT & PISTON

REF. NO.	PART NO.	DESCRIPTION	BDA2					REMARKS
1	1WD–E1411–00	CRANKSHAFT	1					UR Either can use
	1WD–11411–00	CRANKSHAFT	1					UR Either can use
2	1WD–11650–00	CONNECTING ROD ASSY	2					
3	5SL–11654–00	.BOLT, CONNECTING ROD	2					
4	90179–07652	.NUT	2					
5	1WD–11656–00	PLANE BEARING, CONNECTING ROD	4					UR BLUE
	1WD–11656–10	PLANE BEARING, CONNECTING ROD	4					UR BLACK
	1WD–11656–20	PLANE BEARING, CONNECTING ROD	4					UR BROWN
	1WD–11656–30	PLANE BEARING, CONNECTING ROD	4					UR GREEN
6	1WD–E1536–00	GEAR, DRIVE	1					
7	1WD–E1549–00	SPROCKET, CAM CHAIN	1					
8	90105–10883	BOLT, FLANGE	1					
9	90201–10848	WASHER, PLATE	1					
10	1WD–11416–00	PLANE BEARING, CRANKSHAFT 1	6					UR BLUE
	1WD–11416–10	PLANE BEARING, CRANKSHAFT 1	6					UR BLACK
	1WD–11416–20	PLANE BEARING, CRANKSHAFT 1	6					UR BROWN
	1WD–11416–30	PLANE BEARING, CRANKSHAFT 1	6					UR GREEN
	1WD–11416–40	PLANE BEARING, CRANKSHAFT 1	6					UR YELLOW
11	BS8–E1631–00	PISTON (STD)	2					
12	BS8–E1603–00	PISTON RING SET (STD)	2					
13	1WD–E1633–00	PIN, PISTON	2					
14	93450–16068	CIRCLIP	4					
15	1WD–E1531–00	GEAR, BALANCE WEIGHT	1					
16	90105–088F8	BOLT, FLANGE	1					
17	90282–04036	KEY, STRAIGHT	1					
18	1WD–E1496–00	BOSS, BUFFER	1					
19	90201–16812	WASHER, PLATE	1					

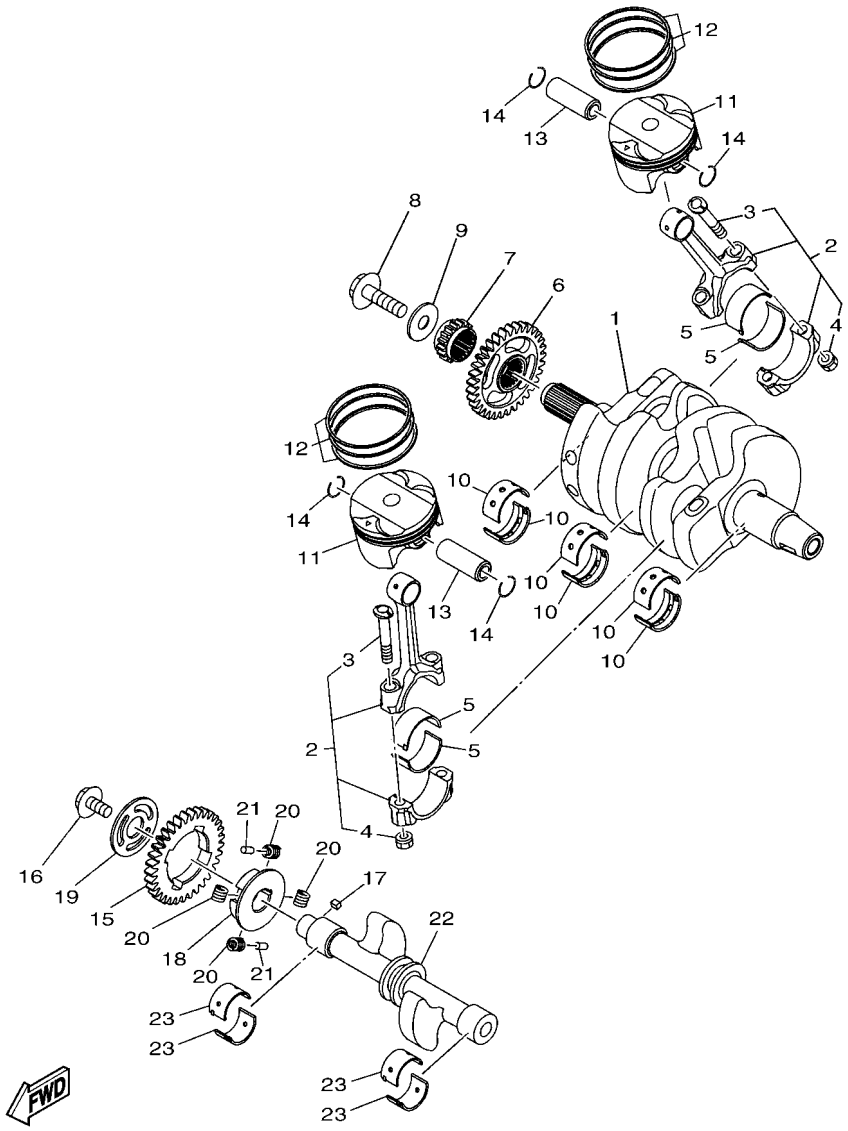

B1E1010-T020

FIG. 2 CRANKSHAFT & PISTON

REF. NO.	PART NO.	DESCRIPTION	BDA2					REMARKS
20	90501–22800	SPRING, COMPRESSION	4					
21	93605–10090	PIN, DOWEL	2					
22	1WD–E1454–00	WEIGHT 1	1					
23	1WD–11413–00	METAL, BALANCE WEIGHT	4					UR BLUE
	1WD–11413–10	METAL, BALANCE WEIGHT	4					UR BLACK
	1WD–11413–20	METAL, BALANCE WEIGHT	4					UR BROWN
	1WD–11413–30	METAL, BALANCE WEIGHT	4					UR GREEN
	1WD–11413–40	METAL, BALANCE WEIGHT	4					UR YELLOW

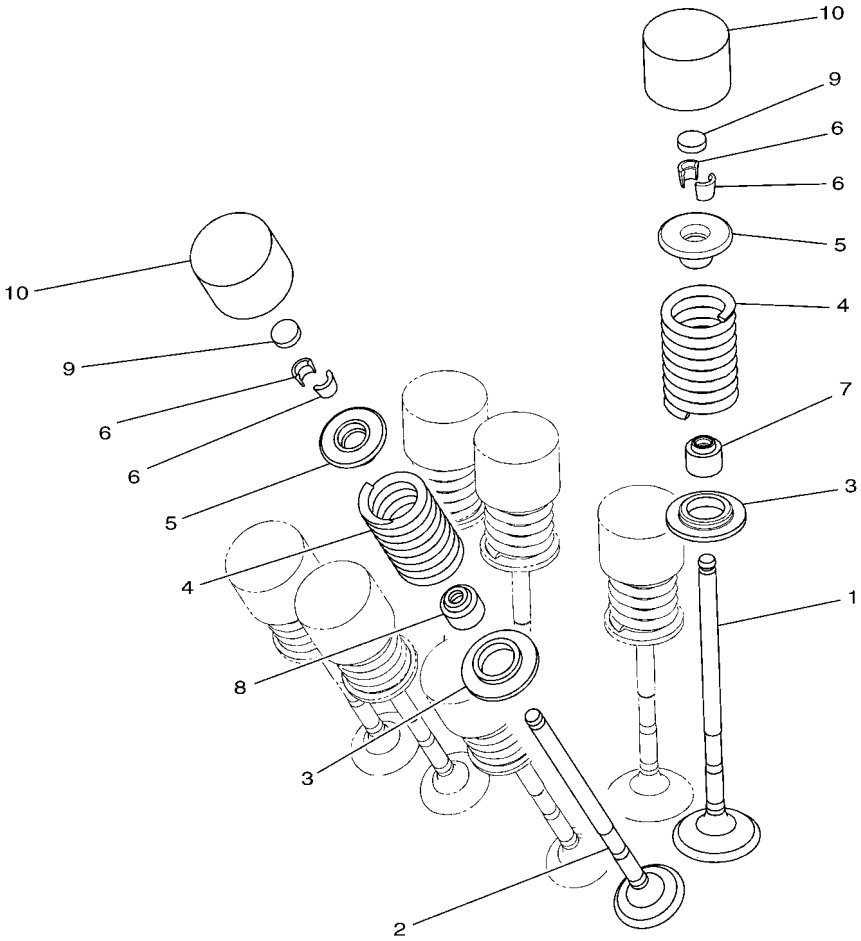

B1E1010-T030

FIG. 3 VALVE

REF. NO.	PART NO.	DESCRIPTION	BDA2					REMARKS
1	1WD–E2111–00	VALVE, INTAKE	4					
2	1WD–E2121–00	VALVE, EXHAUST	4					
3	1WD–E2126–00	SEAT, VALVE SPRING 2	8					
4	1WD–12113–00	SPRING, VALVE INNER	8					
5	1WD–E2117–00	RETAINER, VALVE SPRING	8					
6	3S0–E2118–00	LOCK, VALVE SPRING RETAINER	16					
7	BS8–E2119–00	SEAL, VALVE STEM	4					
8	1PA–E2119–00	SEAL, VALVE STEM	4					
9	1HX–12168–F0	PAD, ADJUSTING 2 (1.50)	8					UR
	1HX–12168–H1	PAD, ADJUSTING 2 (1.55)	8					UR
	1HX–12168–K1	PAD, ADJUSTING 2 (1.60)	8					UR
	1HX–12168–M1	PAD, ADJUSTING 2 (1.65)	8					UR
	1HX–12168–R1	PAD, ADJUSTING 2 (1.70)	8					UR
	1HX–12168–U1	PAD, ADJUSTING 2 (1.75)	8					UR
	1HX–12168–W1	PAD, ADJUSTING 2 (1.80)	8					UR
	1HX–12168–Y1	PAD, ADJUSTING 2 (1.85)	8					UR
	1HX–12169–11	PAD, ADJUSTING 2 (1.90)	8					UR
	1HX–12169–31	PAD, ADJUSTING 2 (1.95)	8					UR
	1HX–12169–50	PAD, ADJUSTING 2 (2.00)	8					UR
	1HX–12169–70	PAD, ADJUSTING 2 (2.05)	8					UR
	1HX–12169–90	PAD, ADJUSTING 2 (2.10)	8					UR
	1HX–12169–E0	PAD, ADJUSTING 2 (2.15)	8					UR
	1HX–12169–G0	PAD, ADJUSTING 2 (2.20)	8					UR
	1HX–12169–J0	PAD, ADJUSTING 2 (2.25)	8					UR
	1HX–12169–L0	PAD, ADJUSTING 2 (2.30)	8					UR
	1HX–12169–N0	PAD, ADJUSTING 2 (2.35)	8					UR
	1HX–12169–T0	PAD, ADJUSTING 2 (2.40)	8					UR

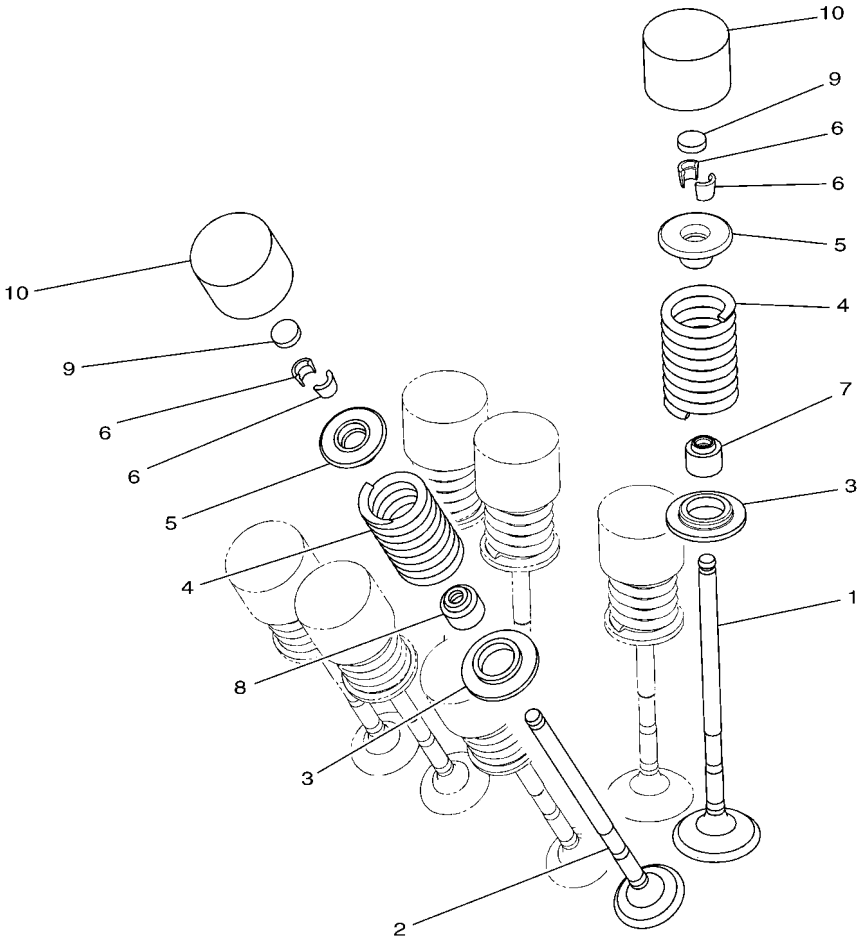

B1E1010-T030

FIG. 3 VALVE

REF. NO.	PART NO.	DESCRIPTION	BDA2					REMARKS
10	1WD–E2153–11	LIFTER, VALVE	8					

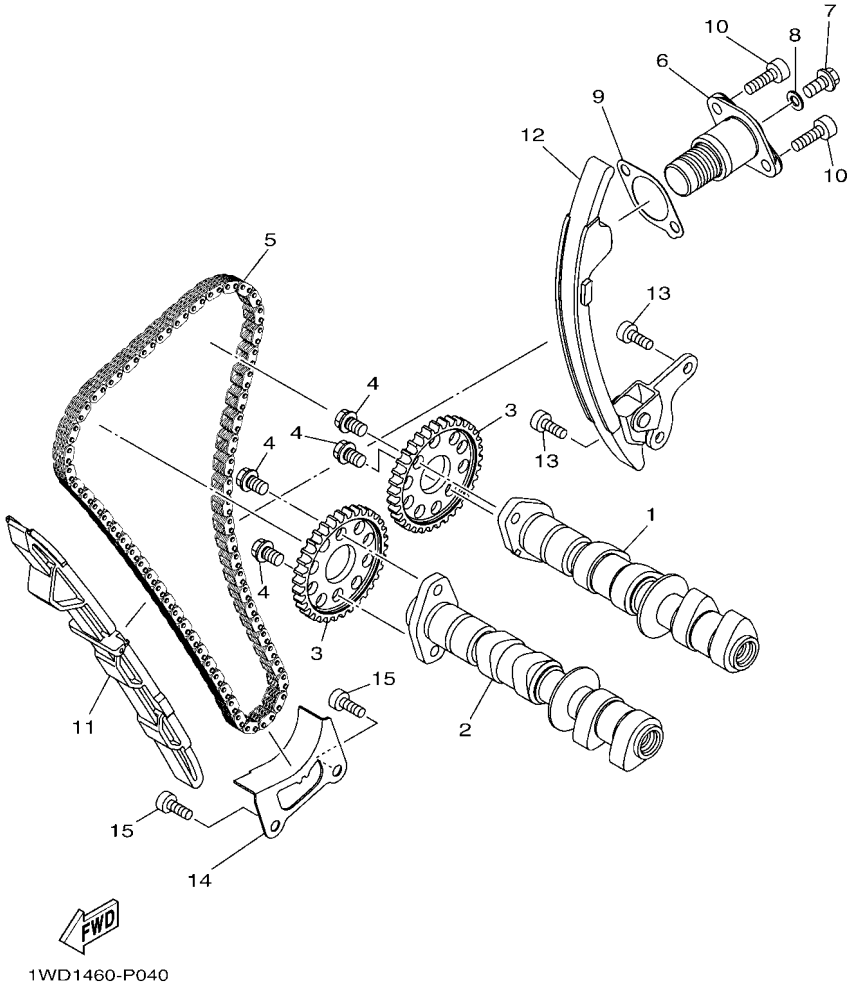

FIG. 4 CAMSHAFT & CHAIN

REF. NO.	PART NO.	DESCRIPTION	BDA2					REMARKS
1	BS8–E2170–00	CAMSHAFT ASSY 1	1					
2	BS8–E2180–00	CAMSHAFT ASSY 2	1					
3	1WD–E2176–00	SPROCKET, CAM CHAIN	2					
4	90105–07800	BOLT, FLANGE	4					
5	94568–K0118	CHAIN (98XRH2015-118P-M)	1					
6	1WD–12210–01	TENSIONER ASSY, CAM CHAIN	1					
7	95022–06008	BOLT, FLANGE	1					
8	90430–06014	GASKET	1					
9	1WD–E2213–00	GASKET, TENSIONER CASE	1					
10	91332–06020	BOLT	2					
11	1WD–E2251–00	DAMPER, CHAIN 1	1					
12	1WD–E2252–00	DAMPER, CHAIN 2	1					
13	90110–06161	BOLT, HEXAGON SOCKET HEAD	2					
14	1WD–E2256–00	COVER, CHAIN	1					
15	90110–06161	BOLT, HEXAGON SOCKET HEAD	2					

FIG. 5 WATER PUMP

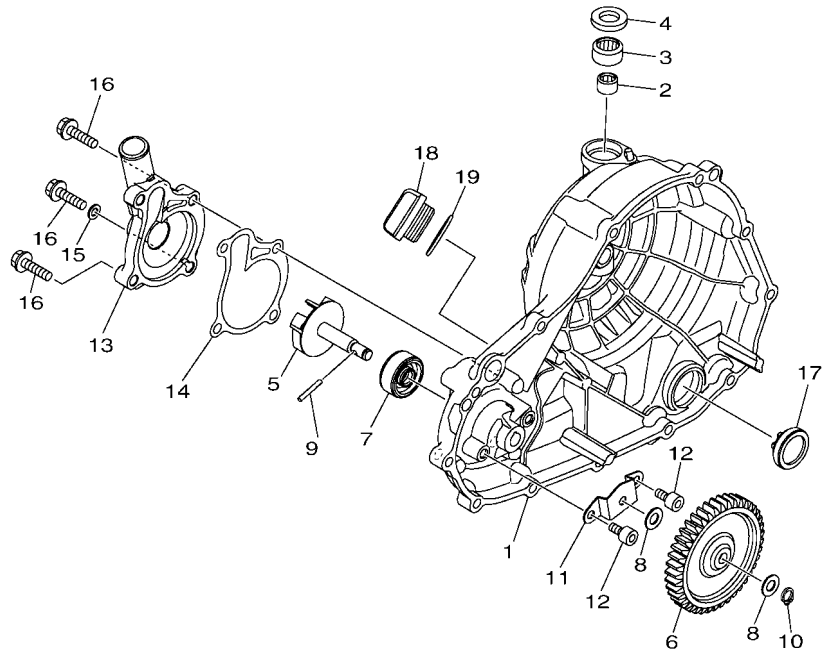

B9T2460-W050

REF. NO.	PART NO.	DESCRIPTION	BDA2					REMARKS
1	1WD–E5421–00	COVER, CRANKCASE 2	1					MBL2
2	93317–11096	BEARING	1					
3	93315–21570	BEARING	1					
4	93102–15801	OIL SEAL	1					
5	1WD–E2450–00	IMPELLER SHAFT ASSY	1					
6	1WD–E2453–00	GEAR	1					
7	33S–E2223–00	SEAL	1					
8	33S–E2456–00	WASHER	2					
9	1WD–E319L–00	PIN, STRAIGHT	1					
10	99009–08400	CIRCLIP	1					
11	1WD–E2681–00	PLATE	1					
12	91312–06010	BOLT, HEXAGON SOCKET HEAD	2					
13	1WD–E2422–00	COVER, HOUSING	1					
14	1WD–E2428–00	GASKET, HOUSING COVER 2	1					
15	90430–06014	GASKET	1					
16	95022–06025	BOLT, FLANGE	3					
17	2H7–15361–00	GAUGE, LEVEL	1					
18	1WD–E5362–00	PLUG, OIL LEVEL	1					
19	93210–27807	O-RING	1					

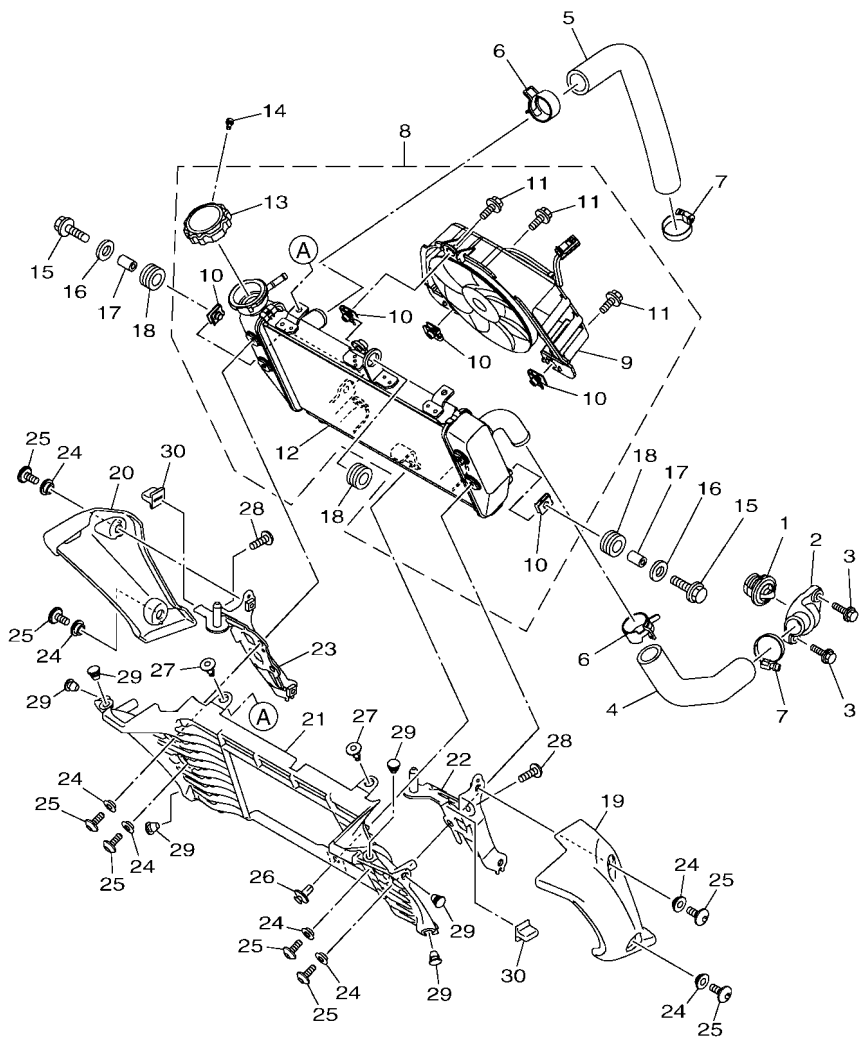

B9T2460-W060

FIG. 6 RADIATOR & HOSE

REF. NO.	PART NO.	DESCRIPTION	BDA2					REMARKS
1	5P0–12411–00	THERMOSTAT	1					
2	1WD–E2413–00	COVER, THERMOSTAT	1					
3	95022–06020	BOLT, FLANGE	2					
4	1WD–E2577–00	HOSE 2	1					
5	1WD–E2578–00	HOSE 3	1					
6	90467–250A1	CLIP	2					
7	90450–28001	HOSE CLAMP ASSY	2					
8	B04–E2460–11	RADIATOR ASSY	1					
9	1WD–E2405–00	.BLOWER ASSY	1					
10	1WD–E2671–00	.NUT 1	5					
11	5YP–E2675–00	.BOLT, BLOWER HOLDING	3					
12	B04–E2461–00	.RADIATOR COMP	1					
13	B04–E2462–10	.CAP, RADIATOR	1					
14	97707–30505	SCREW, TAPPING	1					
15	95827–06025	BOLT, FLANGE	2					
16	90201–06072	WASHER, PLATE	2					
17	90387–064W3	COLLAR	2					
18	90480–15808	GROMMET	3					
19	B9T–F137U–00	GUIDE, AIR 1	1					
20	B9T–F137V–00	GUIDE, AIR 2	1					
21	B9T–F1557–00	DUCT, AIR	1					
22	B9T–F175T–00	BRACKET 1	1					
23	B9T–F175U–00	BRACKET 2	1					
24	90387–06130	COLLAR	8					
25	90111–06151	BOLT,HEX. SOCKET BUTTON	8					
26	90269–07012	RIVET	1					
27	90269–06816	RIVET	2					

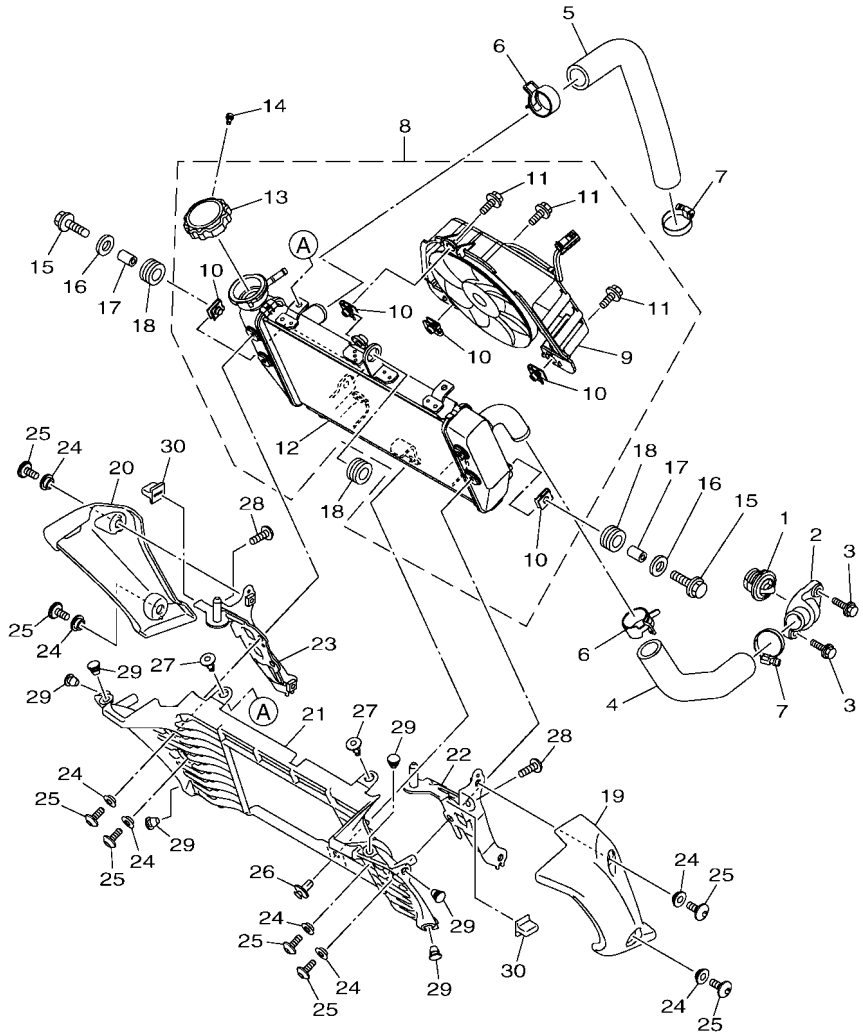

FWD

B9T2460-W060

FIG. 6 RADIATOR & HOSE

REF. NO.	PART NO.	DESCRIPTION	BDA2					REMARKS
28	90160–05012	SCREW, ROUND TAPPING	2					
29	90338–06018	PLUG	6					
30	45P–F1778–00	DAMPER, LOCATING 1	2					

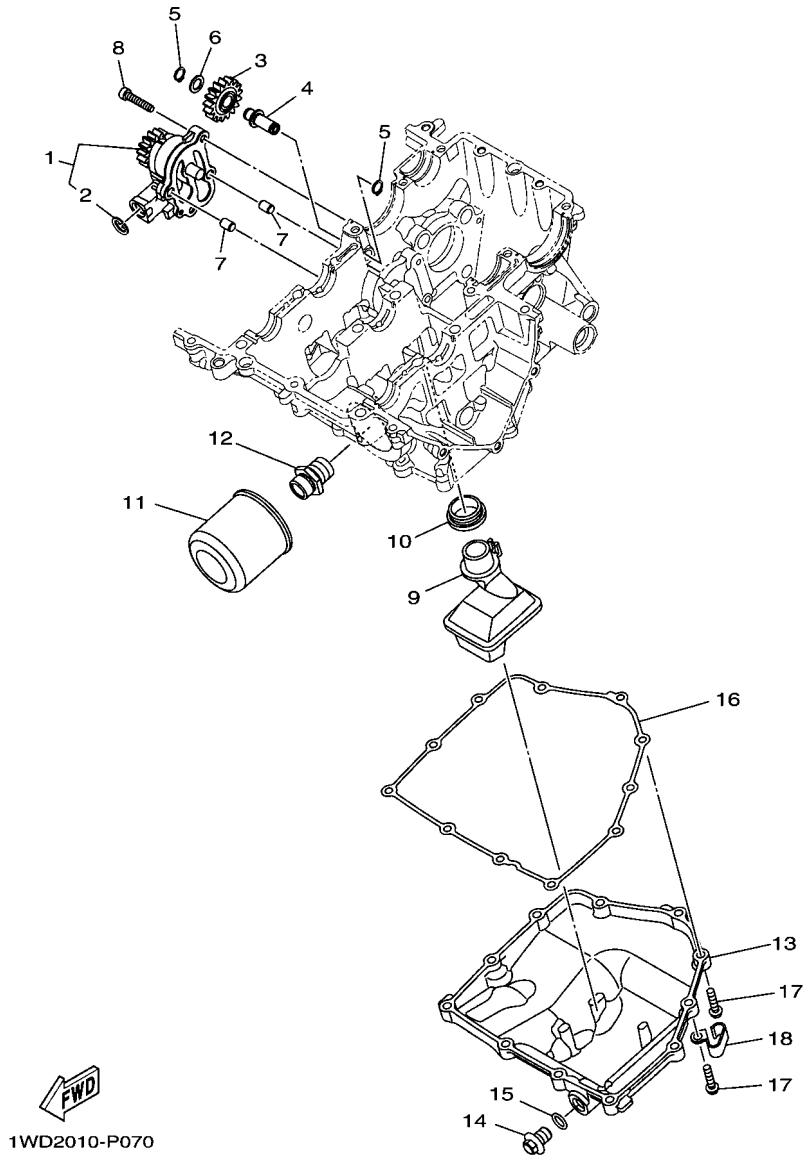

FIG. 7 OIL PUMP

REF. NO.	PART NO.	DESCRIPTION	BDA2					REMARKS
1	1WD–E3300–01	OIL PUMP ASSY	1					
2	99009–15500	.CIRCLIP	1					
3	1WD–E3341–00	GEAR, OIL PUMP IDLE	1					
4	1WD–E3342–00	SHAFT, IDLE GEAR	1					
5	99009–10400	CIRCLIP	2					
6	90201–10119	WASHER, PLATE	1					
7	99530–08012	PIN, DOWEL	2					
8	91332–06030	BOLT	4					
9	1WD–E3410–00	STRAINER HOUSING ASSY	1					
10	1WD–E3415–00	SEAL, OIL STRAINER	1					
11	1WD–E3440–10	ELEMENT ASSY, OIL CLEANER	1					
12	90401–20011	BOLT, UNION	1					
13	1WD–E3417–00	COVER, STRAINER	1					
14	90340–12808	PLUG, STRAIGHT SCREW	1					
15	4YS–E1198–00	GASKET	1					
16	1WD–E3414–00	GASKET, STRAINER COVER	1					
17	95022–06025	BOLT, FLANGE	11					
18	90462–08810	CLAMP	1					

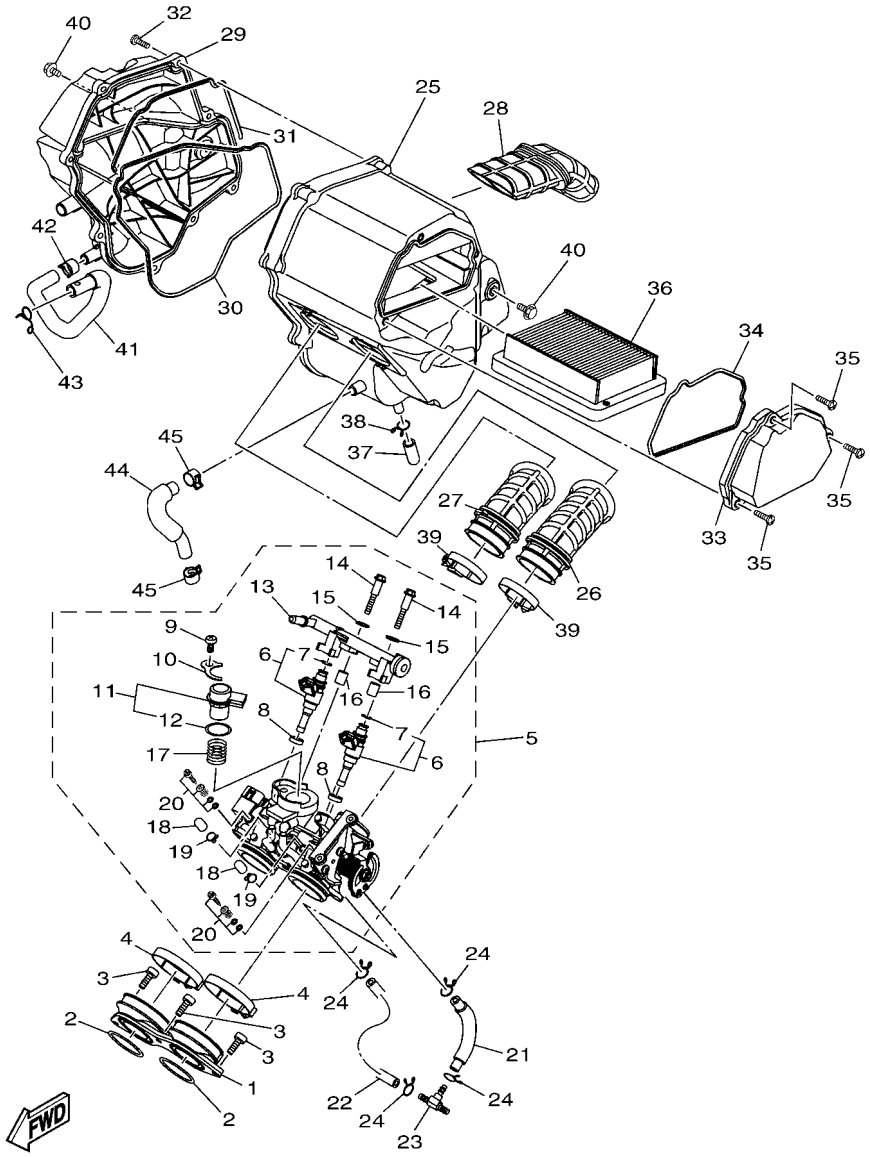

B9AA700-U080

FIG. 8 INTAKE

REF. NO.	PART NO.	DESCRIPTION	BDA2					REMARKS
1	1WD–E3586–00	JOINT, CARBURETOR 1	1					
2	93210–39802	O-RING	2					
3	91332–06016	BOLT	3					
4	90450–55804	HOSE CLAMP ASSY	2					
5	BS8–E3750–02	THROTTLE BODY ASSY	1					
6	1WD–E3761–00	.INJECTOR	2					
7	5PS–14147–00	..O-RING	1					
8	1WD–E3556–00	.GASKET, MANIFOLD	2					
9	98502–06012	.SCREW, PAN HEAD	1					
10	1WD–E4243–00	.PLATE	1					
11	1WS–85801–00	.STEPPING MOTOR	1					
12	54P–E416A–00	..O-RING	1					
13	1WD–E3938–00	.PIPE	1					
14	1WD–E3573–00	.BOLT 1	2					
15	8GL–13571–00	.WASHER	2					
16	8HG–14534–00	.COLLAR	2					
17	1WS–14335–00	.SPRING, PLUNGER	1					
18	895–14169–00	.CAP	2					
19	8A7–14139–00	.CLIP, PIPE	2					
20	5JW–14104–00	.AIR SCREW SET	2					
21	2MS–E4465–00	PIPE	1					
22	2MS–E4466–00	PIPE	1					
23	90413–06031	WAY 3	1					
24	90467–090A2	CLIP	4					
25	BR5–E4411–00	CASE, AIR CLEANER 1	1					
26	1WD–E4469–00	FUNNEL, AIR	1					
27	1WD–E446C–00	FUNNEL 2	1					

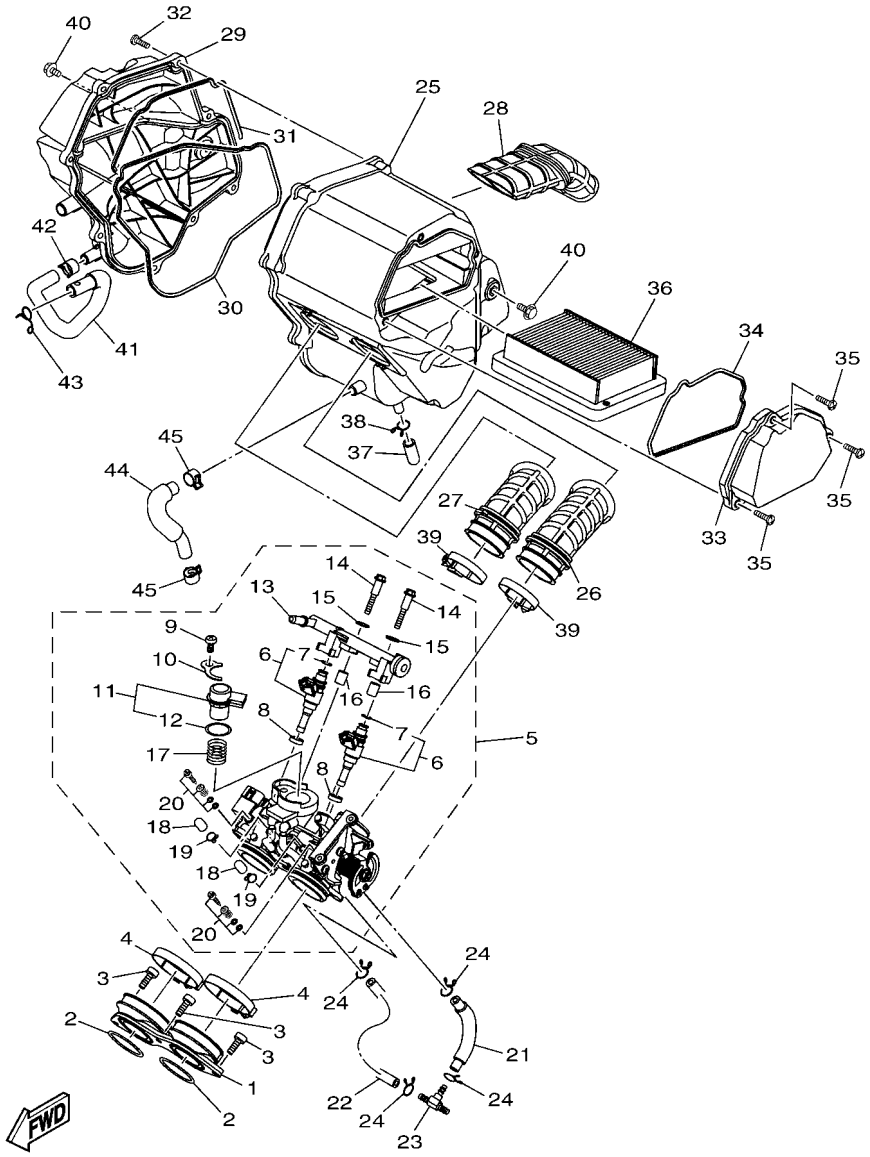

B9AA700-U080

FIG. 8 INTAKE

REF. NO.	PART NO.	DESCRIPTION	BDA2					REMARKS
28	BR5–E4437–00	DUCT	1					
29	BS8–E4412–00	CAP, CLEANER CASE 1	1					
30	1WD–E4452–00	SEAL	1					
31	1WD–E4457–00	SEAL	1					
32	97702–50025	SCREW, TAPPING	8					
33	1WD–E4422–00	CAP, CLEANER CASE 2	1					
34	1WD–E4462–00	SEAL	1					
35	98902–05020	SCREW, BIND	3					
36	1WD–E4451–00	ELEMENT, AIR CLEANER	1					
37	52B–E443E–00	PIPE, DRAIN	1					
38	90467–110A3	CLIP	1					
39	54P–E3474–00	BAND	2					
40	95D32–06010	BOLT, FLANGE DEEP RECESS	2					
41	BR5–E3543–00	HOSE, AIR	1					
42	90467–13802	CLIP	1					
43	90467–12052	CLIP	1					
44	2MS–E5373–01	PIPE, BREATHER	1					
45	90467–13802	CLIP	2					

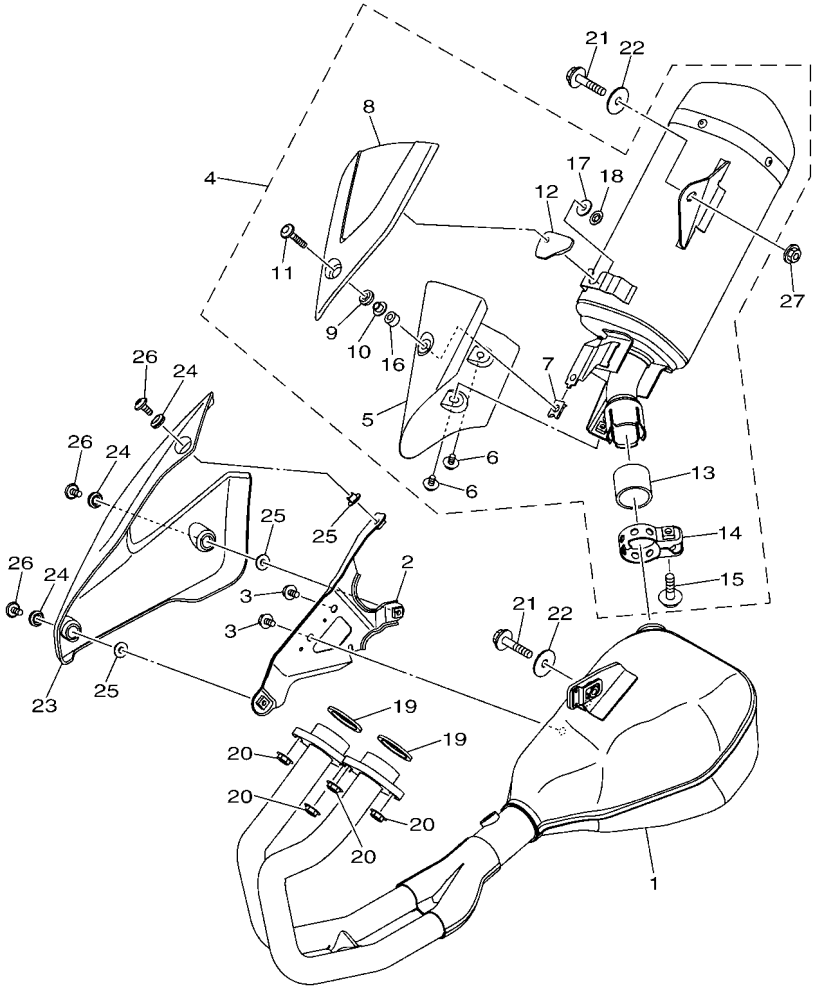

1WD1460-P090

FIG. 9 EXHAUST

REF. NO.	PART NO.	DESCRIPTION	BDA2					REMARKS
1	BS8–E4602–00	EXHAUST PIPE COMP.	1					
2	1WD–E473L–00	BRACKET 3	1					
3	95027–06010	BOLT, FLANGE	2					
4	BR5–E4710–00	MUFFLER ASSY 1	1					
5	1WD–E4758–00	.PROTECTOR, SILENCER	1					
6	90111–06802	.BOLT,HEX. SOCKET BUTTON	2					
7	90183–06818	.NUT, SPRING	1					
8	1WD–E4728–00	.PROTECTOR, MUFFLER 2	1					
9	90480–12581	.GROMMET	1					
10	90387–06273	.COLLAR	1					
11	90111–06847	.BOLT,HEX. SOCKET BUTTON	1					
12	1WD–E4763–00	.SPACER	1					
13	54D–E4714–00	.GASKET, MUFFLER	1					
14	1WD–E4715–00	.BAND, MUFFLER	1					
15	95027–08035	.BOLT, FLANGE	1					
16	90387–068N4	.COLLAR	1					
17	90201–06088	.WASHER, PLATE	1					
18	90183–06011	.NUT, SPRING	1					
19	1WD–E4613–00	GASKET, EXHAUST PIPE	2					
20	95707–08500	NUT, FLANGE	4					
21	90105–088G7	BOLT, FLANGE	2					
22	90201–08612	WASHER, PLATE	2					
23	1WD–E4628–00	PROTECTOR, EXHAUST PIPE	1					
24	90480–12581	GROMMET	3					
25	90387–087L0	COLLAR	3					
26	90111–06152	BOLT,HEX. SOCKET BUTTON	3					
27	95607–08200	NUT, SELF-LOCKING	1					

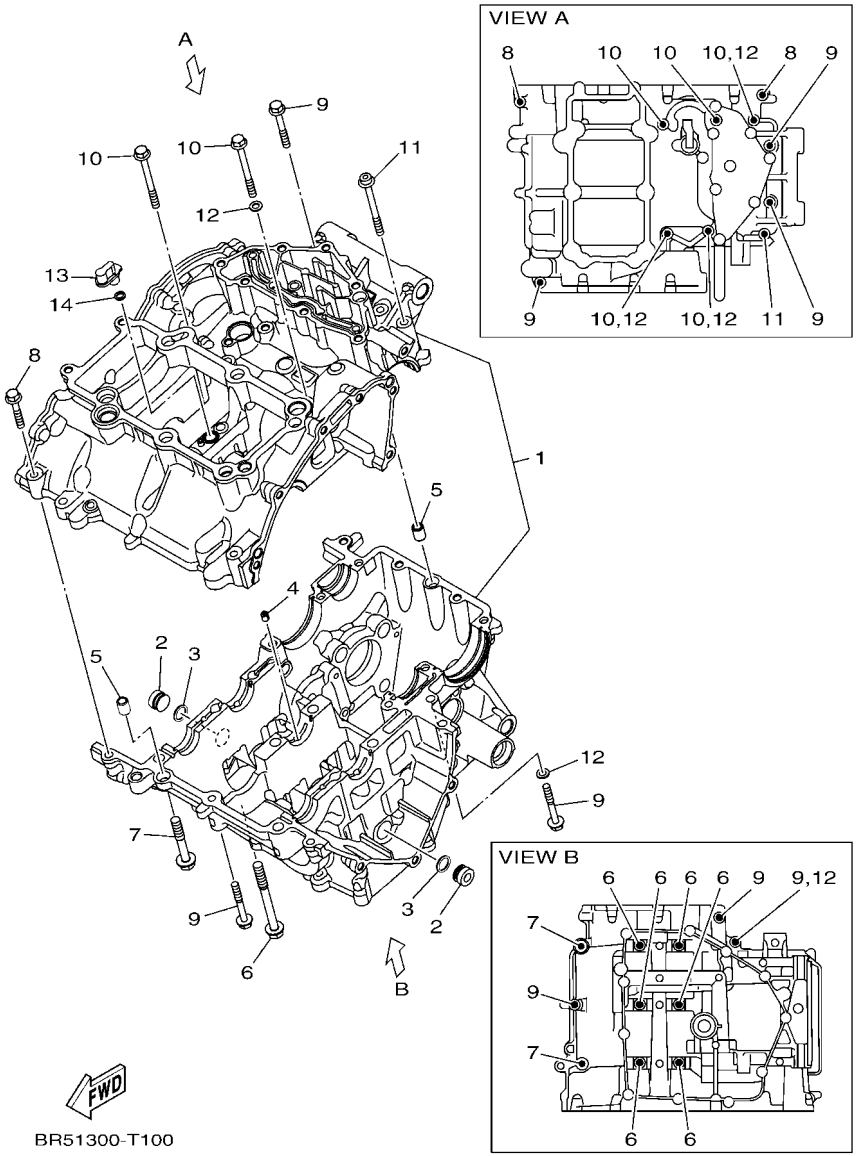

FIG. 10 CRANKCASE

REF. NO.	PART NO.	DESCRIPTION	BDA2					REMARKS
1	1WD–E5150–20	CRANKCASE ASSY	1					MBL2
2	90338–16262	PLUG	2					
3	93210–12803	O-RING	2					
4	1WD–E5148–00	NOZZLE 2	1					
5	99530–10014	PIN, DOWEL	2					
6	90105–088F7	BOLT, FLANGE	6					
7	90105–088G0	BOLT, FLANGE	2					
8	95812–06035	BOLT, FLANGE	2					
9	95812–06045	BOLT, FLANGE	6					
10	95812–06065	BOLT, FLANGE	5					
11	90110–06882	BOLT, HEXAGON SOCKET HEAD	1					
12	90430–06014	GASKET	4					
13	1WD–E5155–00	NOZZLE 3	1					
14	93210–068F7	O-RING	1					

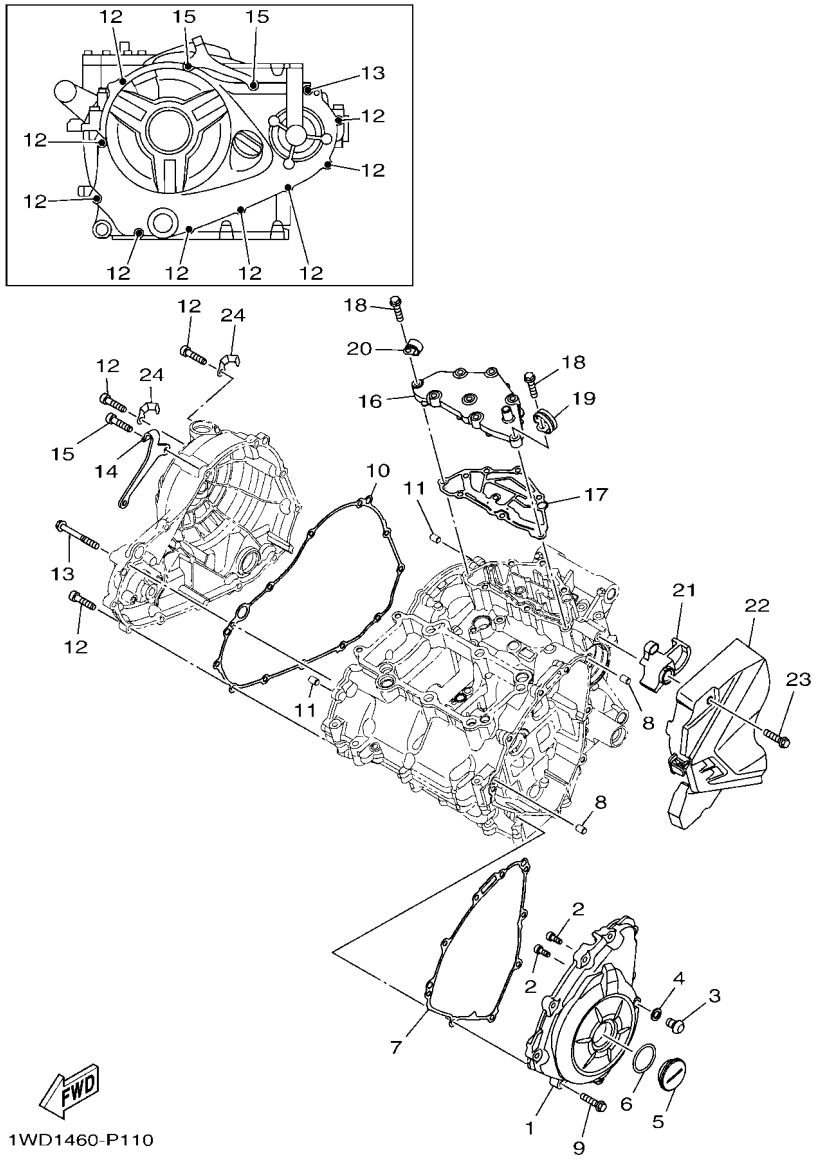

FIG. 11 CRANKCASE COVER 1

REF. NO.	PART NO.	DESCRIPTION	BDA2					REMARKS
1	1WD–E5411–00	COVER, CRANKCASE 1	1					MBL2
2	91312–05012	BOLT, HEXAGON SOCKET HEAD	2					
3	92014–08012	BOLT, BUTTON HEAD	1					
4	90430–08143	GASKET	1					
5	90340–32819	PLUG, STRAIGHT SCREW	1					
6	93210–32816	O-RING	1					
7	1WD–E5451–00	GASKET, CRANKCASE COVER 1	1					
8	99530–08012	PIN, DOWEL	2					
9	95022–06025	BOLT, FLANGE	9					
10	1WD–E5461–00	GASKET, CRANKCASE COVER 2	1					
11	99530–08012	PIN, DOWEL	2					
12	95022–06025	BOLT, FLANGE	9					
13	95022–06050	BOLT, FLANGE	1					
14	1WD–E5441–00	HOLDER, CLUTCH CABLE	1					
15	90110–06178	BOLT, HEXAGON SOCKET HEAD	2					
16	1WD–E5413–10	COVER	1					
17	1WD–E5462–00	GASKET, CRANKCASE COVER 3	1					
18	95022–06025	BOLT, FLANGE	8					
19	90462–08819	CLAMP	1					
20	90462–08806	CLAMP	1					
21	BS7–E5377–00	GUIDE, INLET	1					
22	1WD–E5418–00	COVER, CHAIN CASE	1					
23	95022–06025	BOLT, FLANGE	2					
24	90462–08225	CLAMP	2					

FIG. 12 STARTER CLUTCH

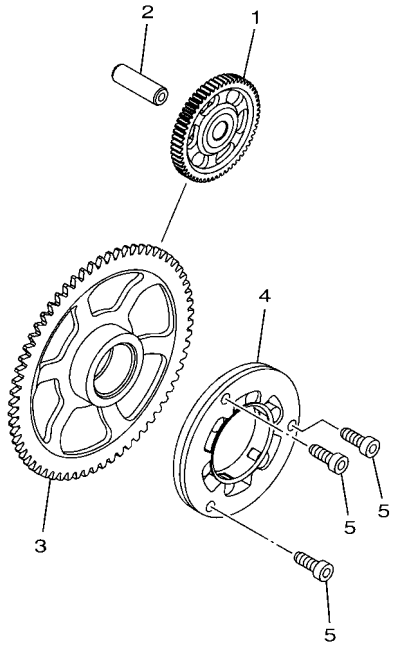

1WD1460-P120

REF. NO.	PART NO.	DESCRIPTION	BDA2					REMARKS
1	1WD–E5514–00	GEAR 2	1					
2	44D–E5521–00	SHAFT 1	1					
3	1WD–E5515–10	GEAR 3	1					
4	1WD–E5580–00	STARTER CLUTCH OUTER ASSY	1					
5	90110–06161	BOLT, HEXAGON SOCKET HEAD	3					

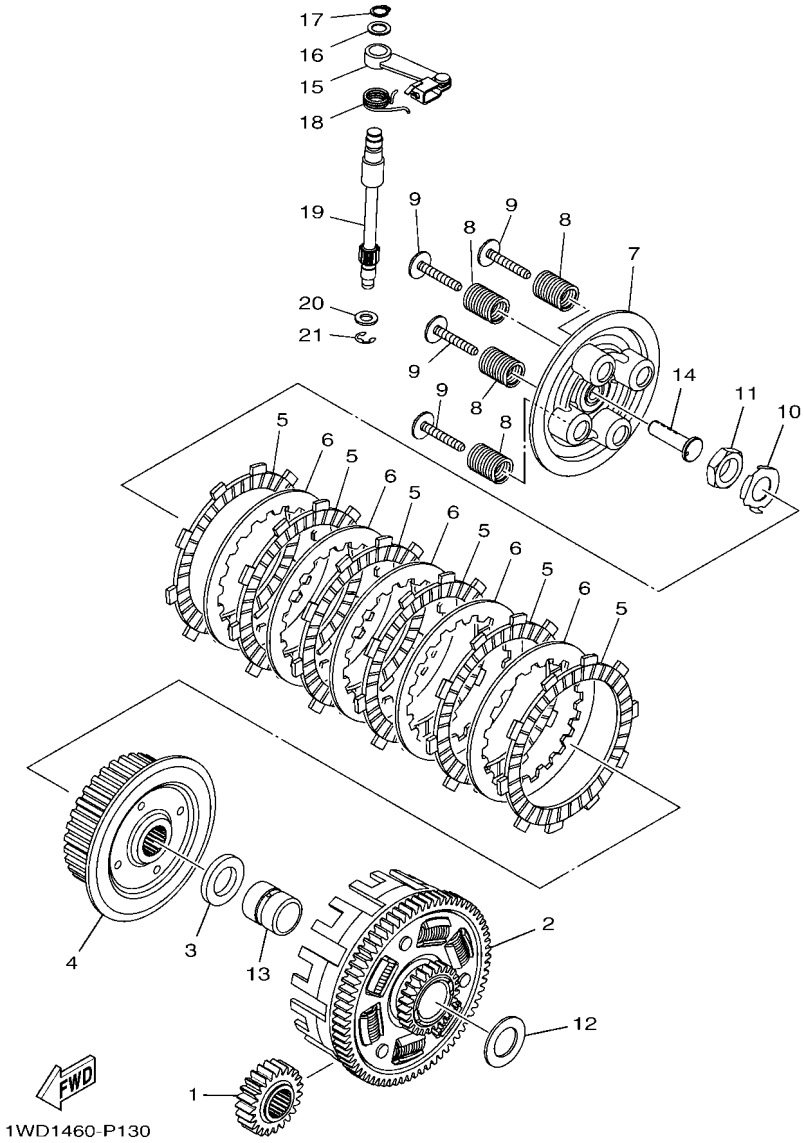

FIG. 13 CLUTCH

REF. NO.	PART NO.	DESCRIPTION	BDA2					REMARKS
1	1WD–E6111–00	GEAR, PRIMARY DRIVE	1					
2	1WD–E6150–00	PRIMARY DRIVEN GEAR COMP.	1					
3	1WD–E6154–00	PLATE, THRUST 1	1					
4	1WD–E6371–00	BOSS, CLUTCH	1					
5	1WD–E6331–00	PLATE, FRICTION 2	6					
6	1WD–E6324–00	PLATE, CLUTCH 1	5					
7	1WD–E6350–01	PRESSURE PLATE ASSY	1					
8	1WD–E6333–10	SPRING, CLUTCH 1	4					
9	1WD–E6337–00	SCREW, SPRING	4					
10	90215–18800	WASHER, LOCK	1					
11	90170–18221	NUT	1					
12	90201–22013	WASHER, PLATE	1					
13	1WD–E6181–00	SPACER 1	1					
14	1WD–E6356–00	ROD, PUSH 1	1					
15	1WD–E6340–00	PUSH LEVER ASSY	1					
16	90201–10843	WASHER, PLATE	1					
17	99009–10400	CIRCLIP	1					
18	90508–18136	SPRING, TORSION	1					
19	1WD–16382–00	AXLE, PUSH LEVER	1					
20	92902–08600	WASHER, PLATE	1					
21	99002–07600	CIRCLIP(E)	1					

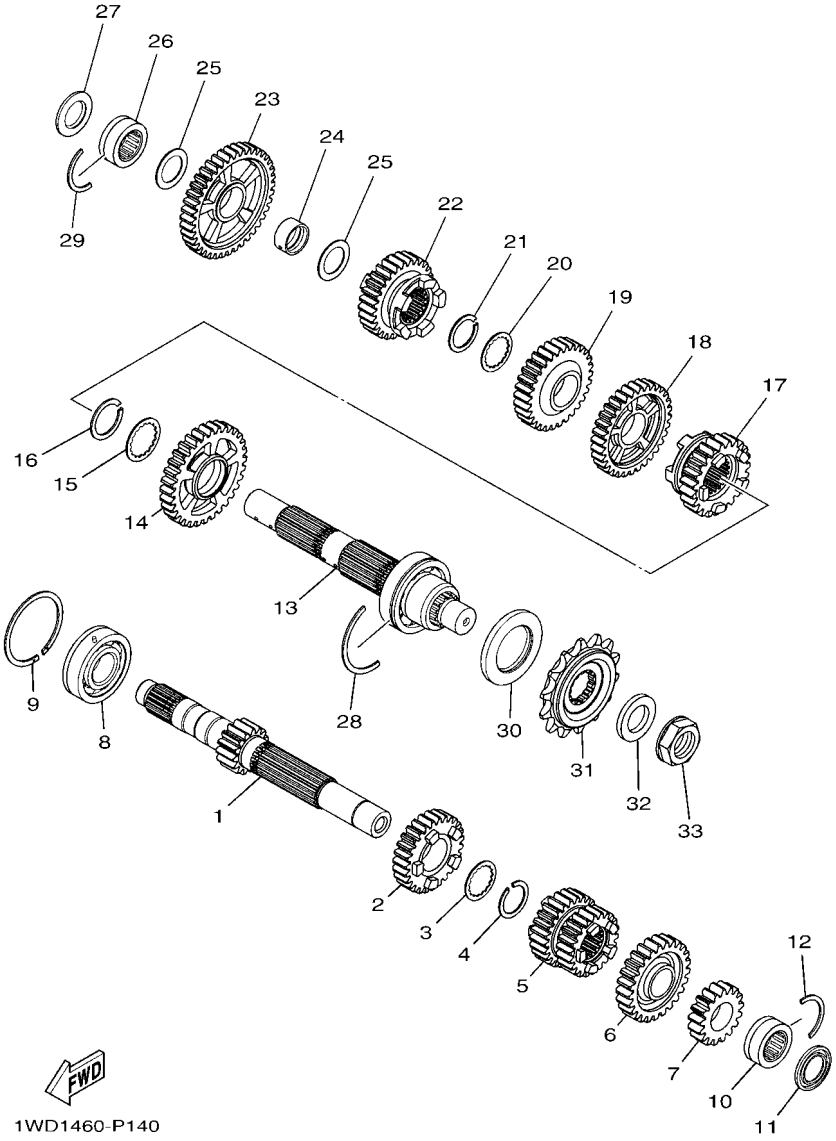

FIG. 14 TRANSMISSION

REF. NO.	PART NO.	DESCRIPTION	BDA2					REMARKS
1	1WD–E7411–00	AXLE, MAIN (15T)	1					
2	1WD–E7151–00	GEAR, 5TH PINION (27T)	1					
3	90214–22008	WASHER, CLAW	1					
4	93440–24200	CIRCLIP	1					
5	1WD–E7131–00	GEAR, 3RD PINION (22T/25T)	1					
6	1WD–E7161–00	GEAR, 6TH PINION (25T)	1					
7	1WD–E7121–00	GEAR, 2ND PINION (17T)	1					
8	93306–255Y9	BEARING	1					
9	93440–52009	CIRCLIP	1					
10	93311–420Y3	BEARING	1					
11	93101–20802	OIL SEAL	1					
12	278–17425–00	CIRCLIP 2	1					
13	1WD–E7402–00	DRIVE AXLE ASSY	1					
14	1WD–E7221–00	GEAR, 2ND WHEEL (32T)	1					
15	90209–25011	WASHER	1					
16	93440–28184	CIRCLIP	1					
17	1WD–E7261–00	GEAR, 6TH WHEEL (23T)	1					
18	1WD–E7231–00	GEAR, 3RD WHEEL (32T)	1					
19	1WD–E7241–00	GEAR, 4TH WHEEL (30T)	1					
20	90214–22008	WASHER, CLAW	1					
21	93440–24200	CIRCLIP	1					
22	1WD–E7251–00	GEAR, 5TH WHEEL (28T)	1					
23	1WD–E7211–00	GEAR, 1ST WHEEL (40T)	1					
24	90387–20814	COLLAR	1					
25	90201–20276	WASHER, PLATE (T=1.0)	2					
26	93311–420Y3	BEARING	1					
27	93101–20802	OIL SEAL	1					

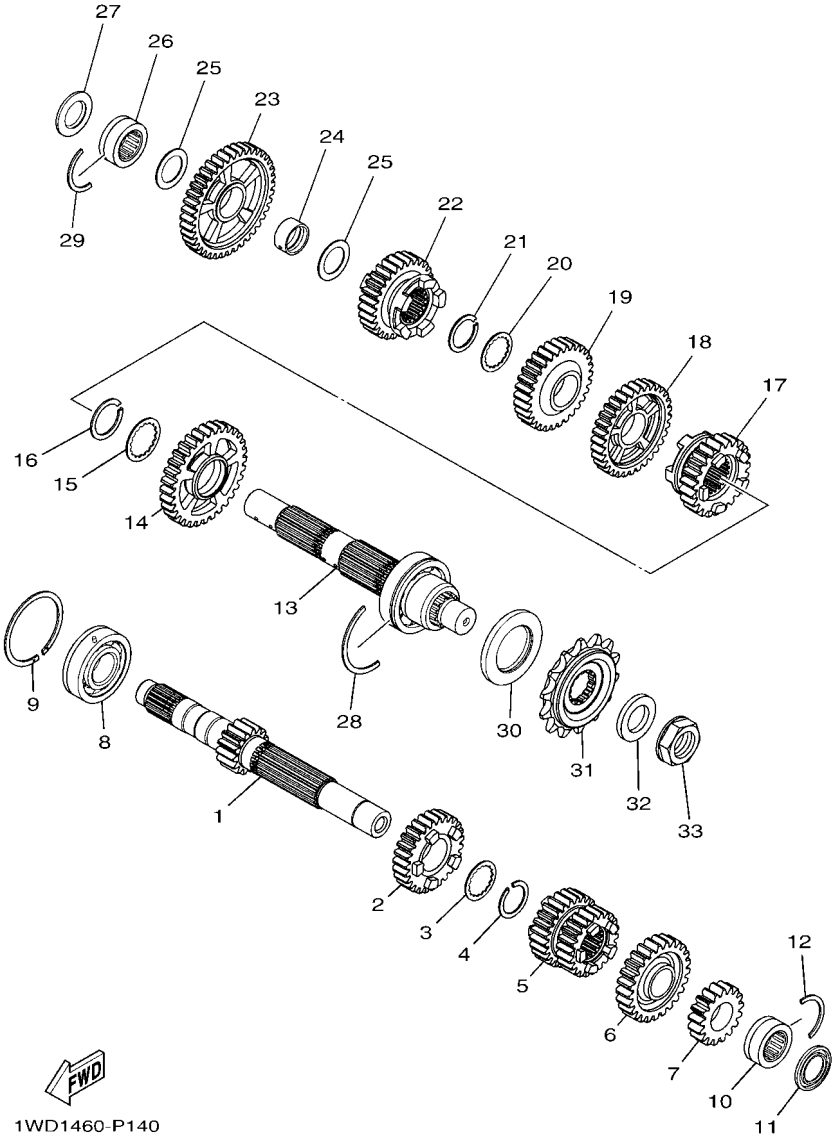

FIG. 14 TRANSMISSION

REF. NO.	PART NO.	DESCRIPTION	BDA2					REMARKS
28	1WD–17424–00	CIRCLIP 1	1					
29	278–17425–00	CIRCLIP 2	1					
30	93102–35808	OIL SEAL	1					
31	1WD–E7460–00	SPROCKET, DRIVE (14T)	1					
32	90201–20023	WASHER, PLATE	1					
33	90179–20013	NUT	1					

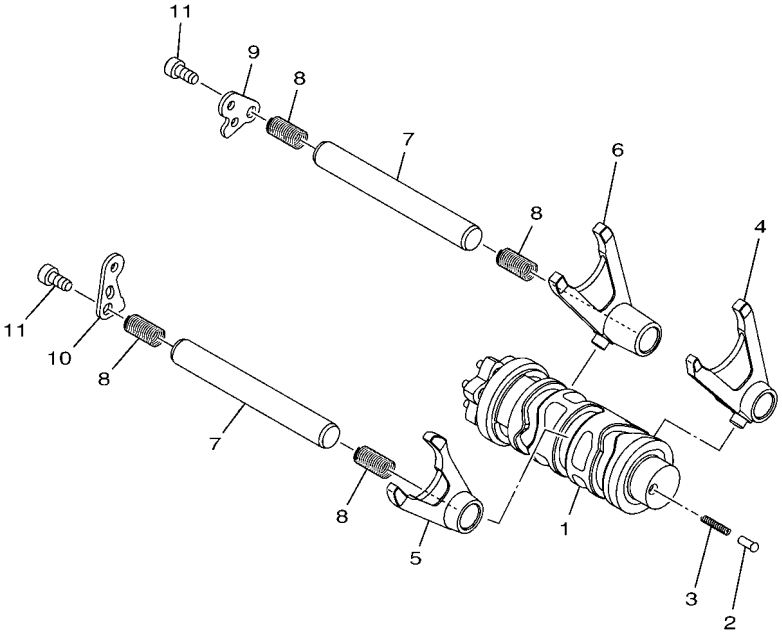

1WD1460-P150

FIG. 15 SHIFT CAM & FORK

REF. NO.	PART NO.	DESCRIPTION	BDA2					REMARKS
1	1WD–E8540–10	SHIFT CAM ASSY	1					
2	5TP–E8542–00	POINT, NEUTRAL	1					
3	90501–06022	SPRING, COMPRESSION	1					
4	1WD–E8511–00	FORK, SHIFT 1	1					
5	1WD–E8512–00	FORK, SHIFT 2	1					
6	1WD–E8513–00	FORK, SHIFT 3	1					
7	1WD–E8531–00	BAR, SHIFT FORK GUIDE 1	2					
8	90501–080A2	SPRING, COMPRESSION	4					
9	1WD–E8536–00	STOPPER, SHIFT BAR	1					
10	1WD–E8562–00	PLATE, STOPPER 2	1					
11	90110–06182	BOLT, HEXAGON SOCKET HEAD	2					

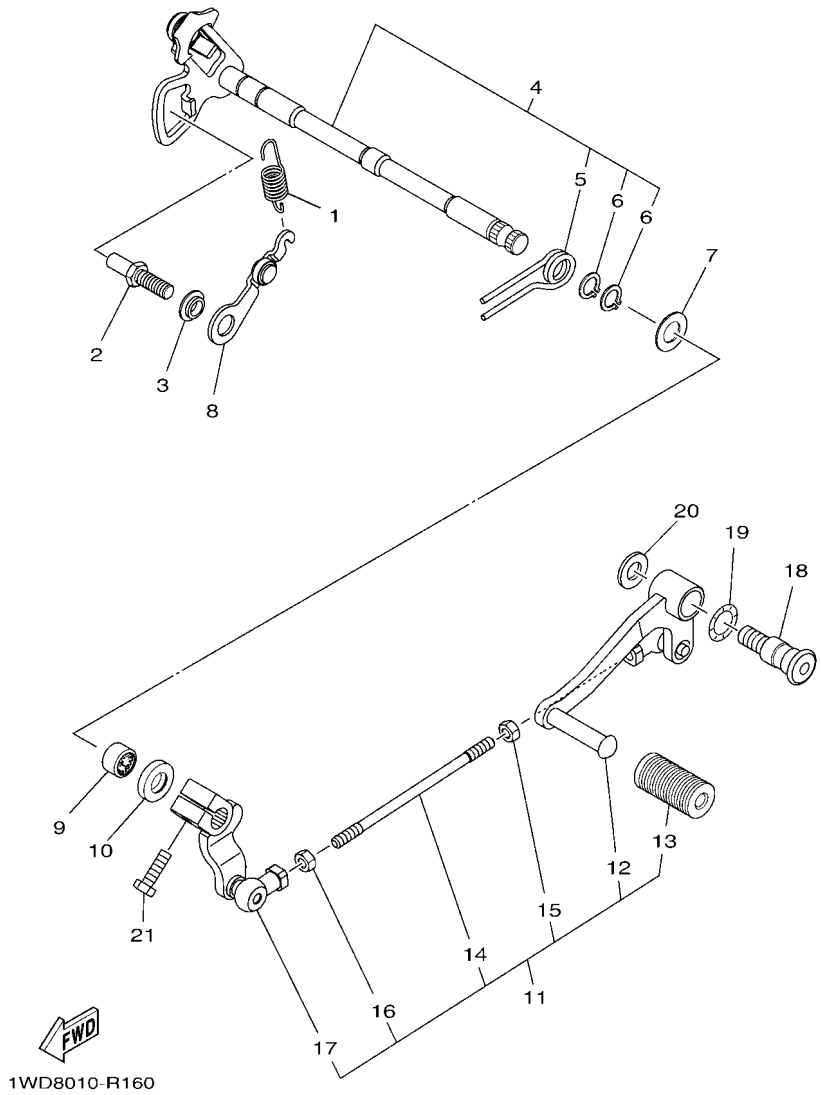

FIG. 16 SHIFT SHAFT

REF. NO.	PART NO.	DESCRIPTION	BDA2					REMARKS
1	1WD–E8337–00	SPRING	1					
2	1WD–E8127–10	STOPPER, SCREW	1					
3	1WD–E8175–00	SPACER	1					
4	1WD–E8101–00	SHIFT SHAFT ASSY	1					
5	90508–29806	.SPRING, TORSION	1					
6	99009–12400	.CIRCLIP	2					
7	90201–127E1	WASHER, PLATE	1					
8	1WD–E8140–00	STOPPER LEVER ASSY	1					
9	93317–11295	BEARING	1					
10	93102–12891	OIL SEAL	1					
11	1WD–E8110–00	SHIFT PEDAL ASSY	1					
12	1WD–E8111–00	.PEDAL, SHIFT	1					
13	1EG–E8113–01	.COVER, SHIFT PEDAL	1					
14	1WD–E8115–00	.ROD, SHIFT	1					
15	90170–06023	.NUT	1					
16	95302–06600	.NUT, HEXAGON	1					
17	1WD–E8112–00	.ARM, SHIFT	1					
18	BS8–F7261–00	SHAFT	1					
19	90206–14001	WASHER, WAVE	1					
20	90201–10021	WASHER, PLATE	1					
21	97012–06020	BOLT	1					

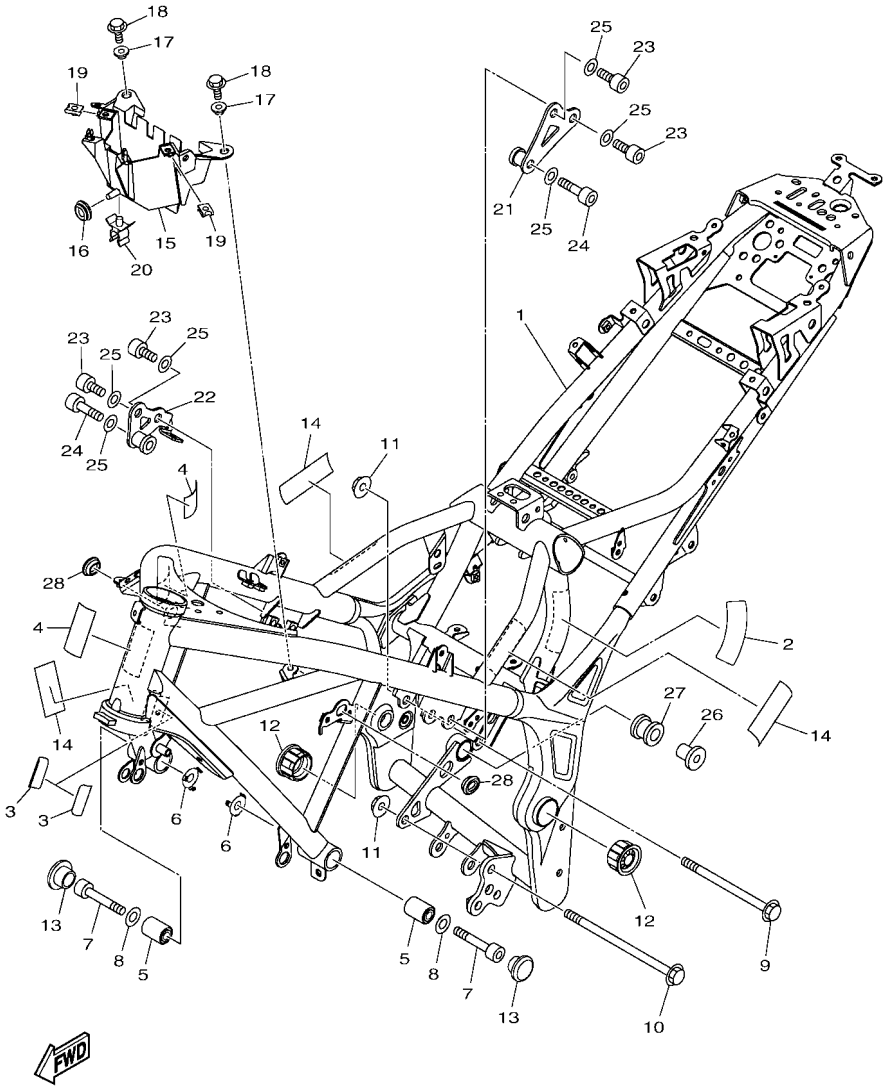

BDA1440-V170

FIG. 17 FRAME

REF. NO.	PART NO.	DESCRIPTION	BDA2					REMARKS
1	B04–F1110–00–P1	FRAME COMP.	1					MBL2
2	1WD–F1652–00	PROTECTOR	1					
3	1WD–F193A–00	PROTECTOR	2					
4	5D9–F414G–00	SEAL	2					
5	90388–10816	DAMPER	2					
6	1WD–F191B–00	PLATE 1	2					
7	91317–10060	BOLT,HEX.SOCKET HEAD	2					
8	90201–10854	WASHER, PLATE	2					
9	90105–10889	BOLT, FLANGE	1					
10	90105–10891	BOLT, FLANGE	1					
11	90179–10805	NUT	2					
12	1WD–F135F–00	COVER	2					
13	90338–23801	PLUG	2					
14	B04–F414G–00	SEAL	3					
15	1WD–F1171–00	BOX	1					
16	90480–13398	GROMMET	1					
17	90387–07819	COLLAR	2					
18	95022–06014	BOLT, FLANGE	2					
19	90183–06818	NUT, SPRING	2					
20	90464–12015	CLAMP	1					
21	1WD–F122A–00	STAY 1	1					
22	B04–F122B–00	STAY 2	1					
23	91317–10020	BOLT,HEX.SOCKET HEAD	4					
24	91317–10045	BOLT,HEX.SOCKET HEAD	2					
25	92907–10600	WASHER, PLATE	6					
26	90387–08813	COLLAR	1					
27	5TP–E4747–00	DAMPER, MUFFLER	1					

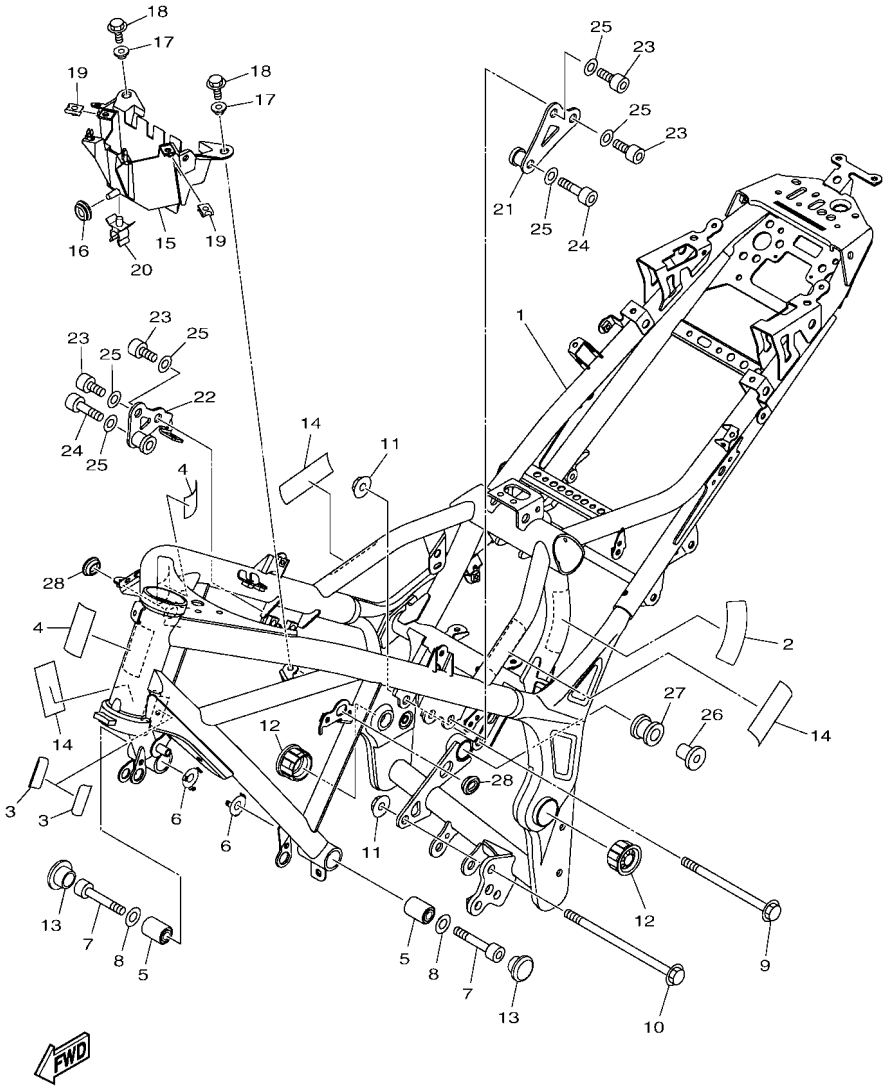

BDA1440-V170

FIG. 17 FRAME

REF. NO.	PART NO.	DESCRIPTION	BDA2					REMARKS
28	90480–01558	GROMMET	2					

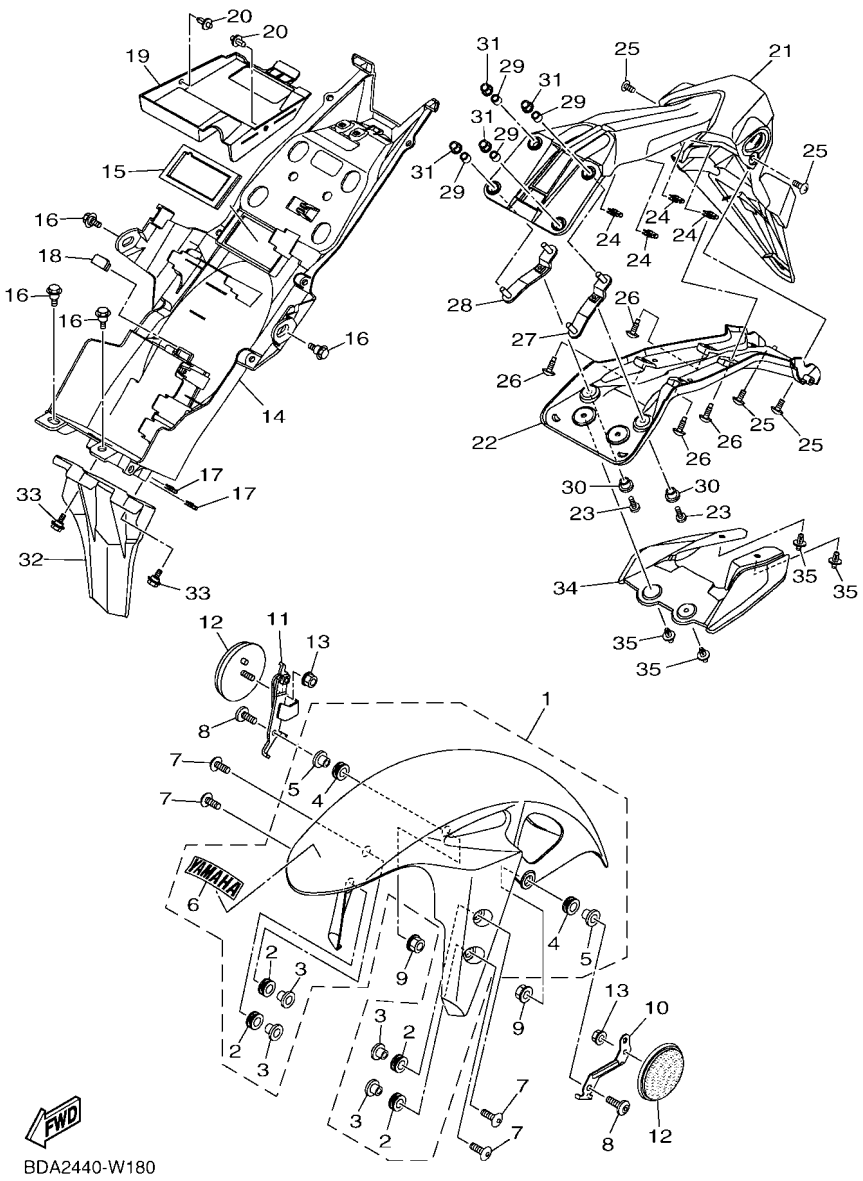

BDA2440-W180

FIG. 18 FENDER

REF. NO.	PART NO.	DESCRIPTION	BDA2					REMARKS
1	BS7–XF151–40–P6	FENDER, FRONT	1					UR FOR DPBMC
	BS7–XF151–20–P9	FENDER, FRONT	1					UR FOR PGD
2	90480–12808	.GROMMET	4					
3	90387–06899	.COLLAR	4					
4	90480–12808	.GROMMET	2					
5	90387–06899	.COLLAR	2					
6	5BP–F153E–D0	.EMBLEM, YAMAHA	1					UR FOR DPBMC
	5BP–F153E–E0	.EMBLEM, YAMAHA	1					UR FOR PGD
7	90111–06137	BOLT,HEX. SOCKET BUTTON	4					
8	90111–06847	BOLT,HEX. SOCKET BUTTON	2					
9	95702–06500	NUT, FLANGE	2					
10	B5L–F113J–00	BRACKET, REFLECTOR 1	1					
11	B5L–F113K–01	BRACKET, REFLECTOR 2	1					
12	2FC–H5111–00	REFLECTOR, 1	2					
13	95702–05500	NUT, FLANGE	2					
14	BR5–F1611–01	FENDER, REAR	1					
15	1WD–F1669–00	SEAL	1					
16	90109–063F1	BOLT	4					
17	90183–05076	NUT, SPRING	2					
18	1WD–F16A2–00	SEAL, 2	1					
19	BR5–F163E–00	COVER, REAR FENDER 2	1					
20	90269–06816	RIVET	2					
21	1WD–F1629–01	GUARD, MUD	1					
22	1WD–F1617–00	BRACKET, FENDER	1					
23	90111–05021	BOLT,HEX. SOCKET BUTTON	2					
24	90183–050A7	NUT, SPRING	4					
25	97707–50016	SCREW, TRUSS HEAD TAPPING	4					

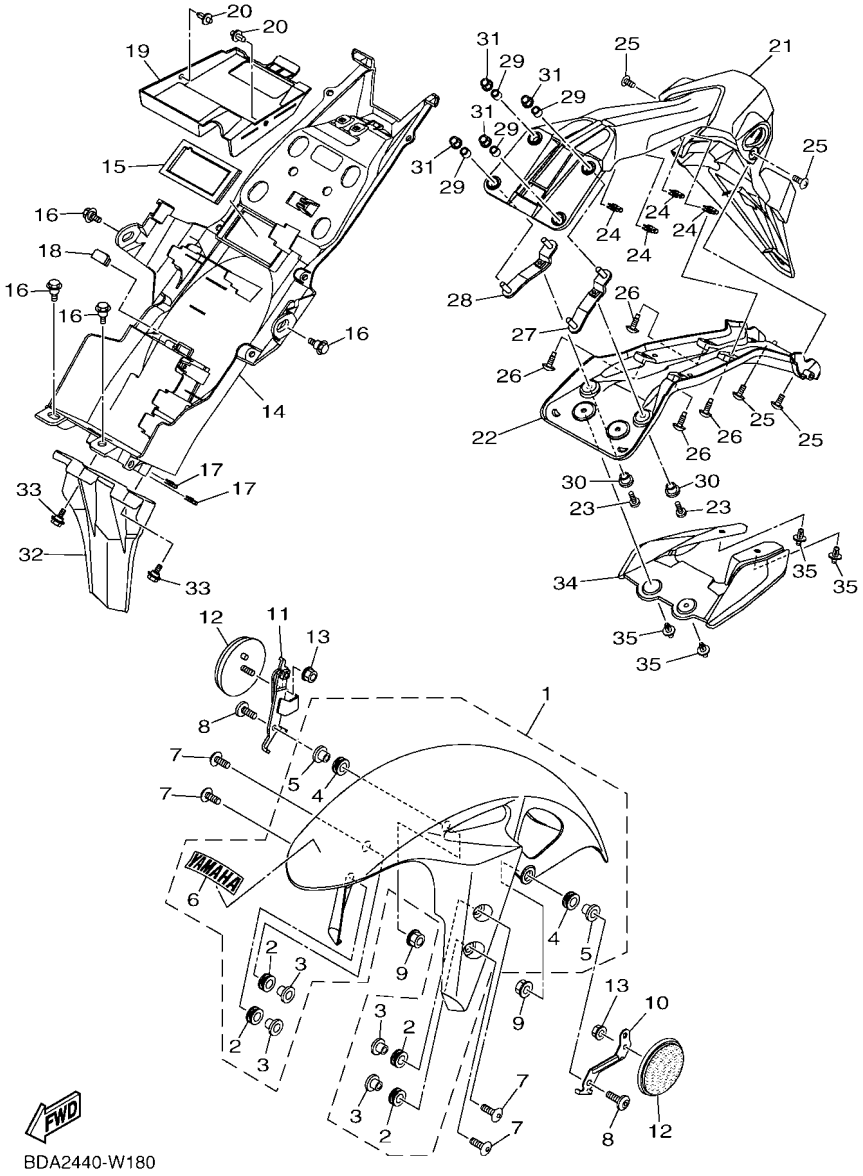

BDA2440-W180

FIG. 18 FENDER

REF. NO.	PART NO.	DESCRIPTION	BDA2					REMARKS
26	90111–05018	BOLT,HEX. SOCKET BUTTON	4					
27	1WD–F1688–00	BRACKET, REAR STAY	1					
28	1WD–F1689–00	BRACKET, REAR STAY 2	1					
29	90387–066J9	COLLAR	4					
30	90387–068L9	COLLAR	2					
31	95602–06200	NUT, SELF-LOCKING	4					
32	1WD–F1621–00	FLAP	1					
33	90109–05003	BOLT	2					
34	1WD–F163A–00	COVER, REAR FENDER 1	1					
35	90269–06816	RIVET	4					

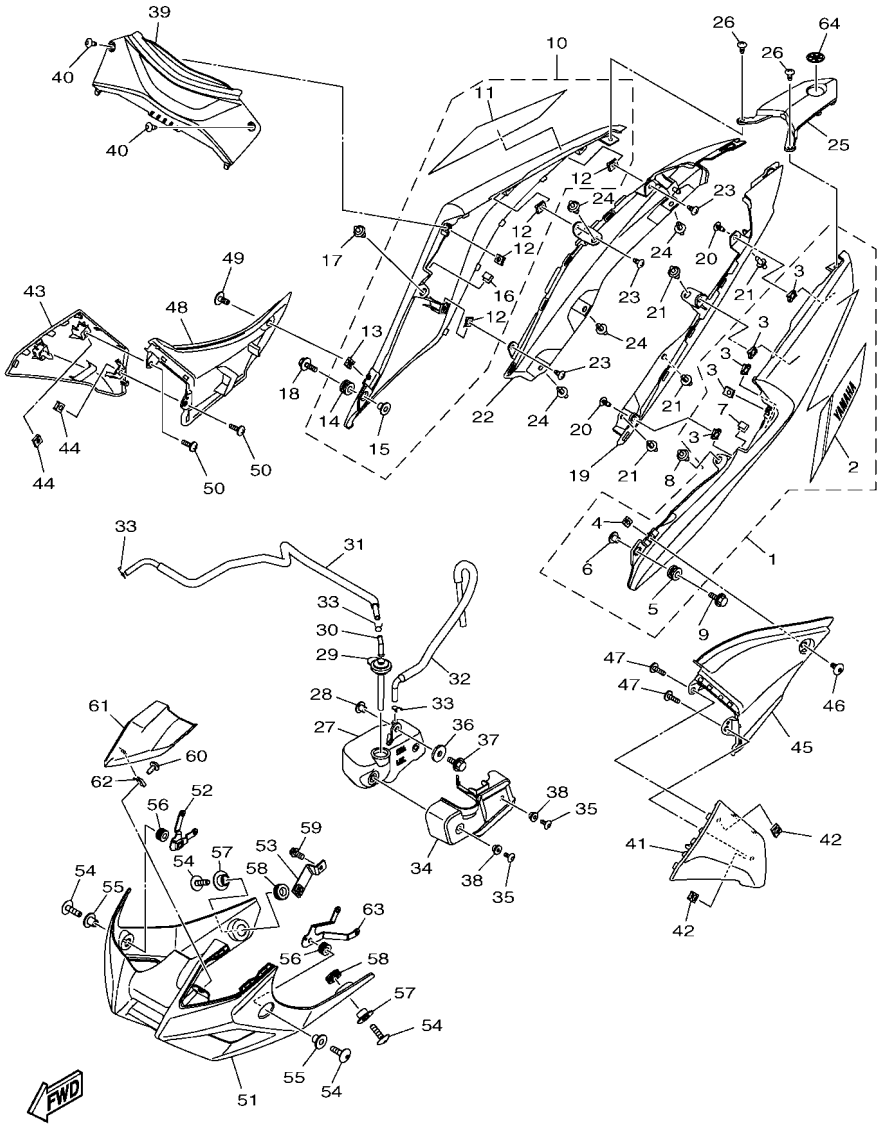

B5W8110-W190

FIG. 19 SIDE COVER

REF. NO.	PART NO.	DESCRIPTION	BDA2					REMARKS
1	1WD–XF171–00–PC	COVER, SIDE 1	1					UR FOR DPBMC
	1WD–XF171–20–PC	COVER, SIDE 1	1					UR FOR PGD
2	B9T–F173E–30	.GRAPHIC 1	1					UR FOR DPBMC
	B9T–F173E–40	.GRAPHIC 1	1					UR FOR PGD
3	90183–05807	.NUT, SPRING	5					
4	90183–050A7	.NUT, SPRING	1					
5	90480–12808	.GROMMET	1					
6	90387–06899	.COLLAR	1					
7	31B–F8307–00	.SEAL	1					
8	90269–06816	RIVET	1					
9	90119–06810	BOLT, WITH WASHER	1					
10	1WD–XF172–00–PC	COVER, SIDE 2	1					UR FOR DPBMC
	1WD–XF172–20–PC	COVER, SIDE 2	1					UR FOR PGD
11	B9T–F173F–30	.GRAPHIC 2	1					UR FOR DPBMC
	B9T–F173F–40	.GRAPHIC 2	1					UR FOR PGD
12	90183–05807	.NUT, SPRING	4					
13	90183–050A7	.NUT, SPRING	1					
14	90480–12808	.GROMMET	1					
15	90387–06899	.COLLAR	1					
16	31B–F8307–00	.SEAL	1					
17	90269–06816	RIVET	1					
18	90119–06810	BOLT, WITH WASHER	1					
19	1WD–F171L–00	MOLE, SIDE COVER 1	1					
20	97707–50016	SCREW, TRUSS HEAD TAPPING	2					
21	90269–06816	RIVET	4					
22	1WD–F171M–00	MOLE, SIDE COVER 2	1					
23	97707–50016	SCREW, TRUSS HEAD TAPPING	3					

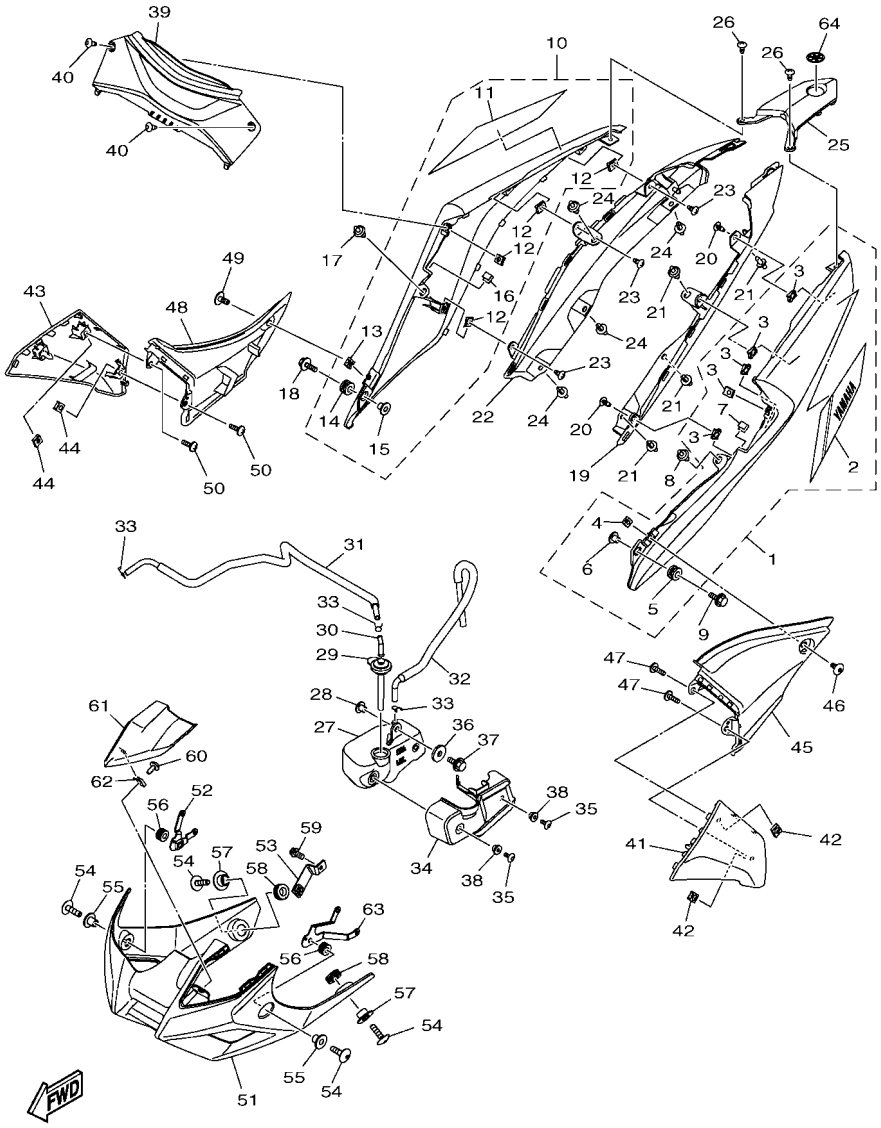

B5W8110-W190

FIG. 19 SIDE COVER

REF. NO.	PART NO.	DESCRIPTION	BDA2					REMARKS
24	90269–06816	RIVET	4					
25	1WD–F171N–00	MOLE, SIDE COVER 3	1					
26	97707–50016	SCREW, TRUSS HEAD TAPPING	2					
27	1WD–F1871–01	TANK, RECOVERY	1					
28	90387–06857	COLLAR	1					
29	1WD–F1875–00	CAP	1					
30	3C1–F1828–00	ELBOW	1					
31	1WD–F1816–01	PIPE 1	1					
32	1WD–F1817–00	PIPE 2	1					
33	90467–08003	CLIP	3					
34	BS7–F172W–00	COVER	1					
35	90111–05003	BOLT,HEX. SOCKET BUTTON	2					
36	90201–06380	WASHER PLAIN	1					
37	95807–06014	BOLT, FLANGE	1					
38	90560–06244	SPACER	2					
39	1WD–F1731–00–PA	COVER, SIDE 3	1					MDNM8
40	90160–05810	SCREW, ROUND TAPPING	2					
41	B9T–F171E–00–P0	COVER, SIDE 5	1					UR FOR DPBMC
	B9T–F171E–00–3E	COVER, SIDE 5	1					UR FOR PGD
42	90183–05807	NUT, SPRING	2					
43	B9T–F171X–00–P0	COVER, SIDE 6	1					UR FOR DPBMC
	B9T–F171X–00–3E	COVER, SIDE 6	1					UR FOR PGD
44	90183–05807	NUT, SPRING	2					
45	B9T–F1716–00	LID, SIDE COVER	1					
46	90111–05003	BOLT,HEX. SOCKET BUTTON	1					
47	97702–50016	SCREW,TAPPING	2					
48	B9T–F1726–00	LID, SIDE COVER 2	1					

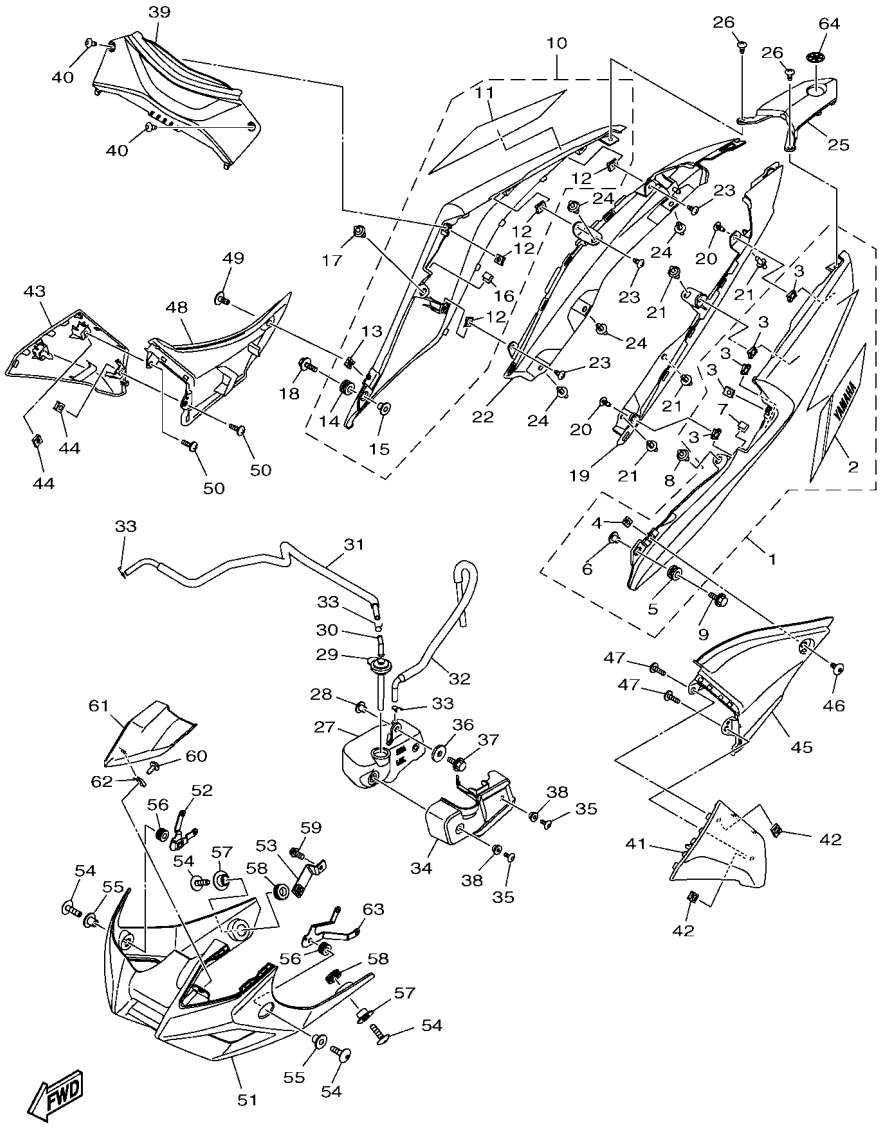

B5W8110-W190

FIG. 19 SIDE COVER

REF. NO.	PART NO.	DESCRIPTION	BDA2					REMARKS
49	90111–05003	BOLT,HEX. SOCKET BUTTON	1					
50	97702–50016	SCREW,TAPPING	2					
51	B6W–F8385–00–P1	COVER, UNDER	1					MDNM8
52	B04–F833F–00	BRACKET 9	1					
53	B04–F833G–00	BRACKET 10	1					
54	90111–06117	BOLT,HEX. SOCKET BUTTON	4					
55	90387–06899	COLLAR	2					
56	90480–12808	GROMMET	2					
57	90387–09801	COLLAR	2					
58	90480–18418	GROMMET	2					
59	95022–06012	BOLT, FLANGE	1					
60	97702–50012	SCREW, TAPPING	1					
61	B08–F842M–00	COVER 1	1					
62	90183–05807	NUT, SPRING	1					
63	B04–F833E–00	BRACKET 8	1					
64	1PA–F836B–01	TUNING FORK MARK	1					

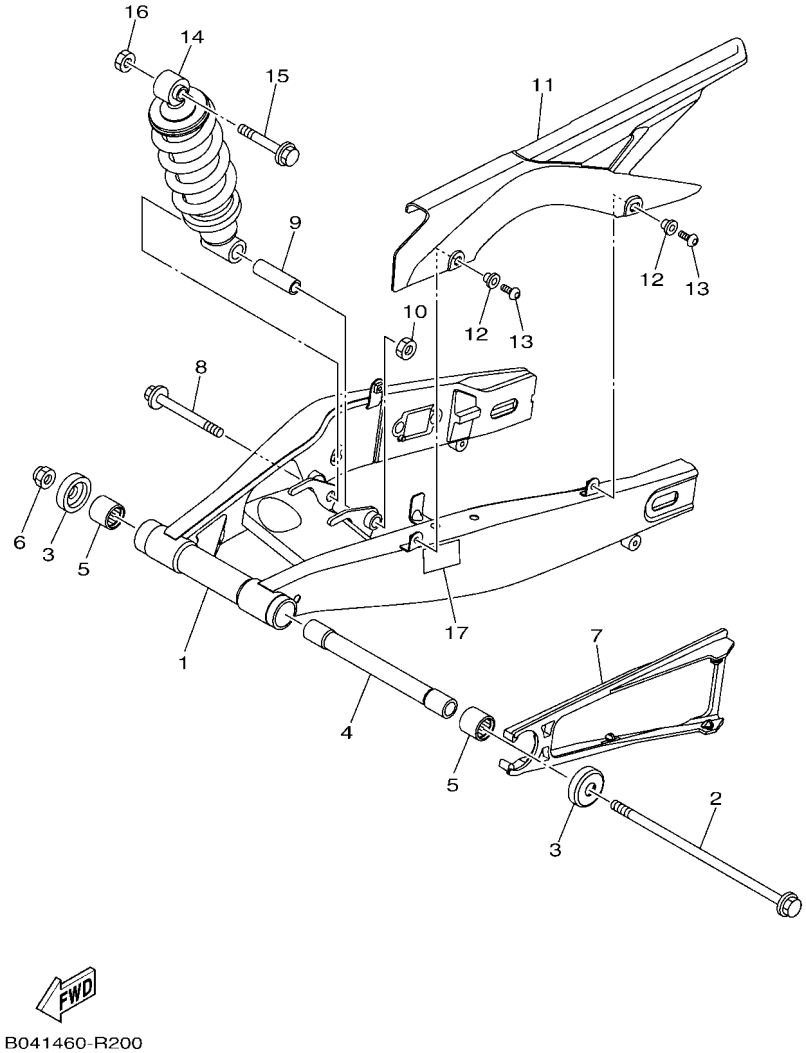

FIG. 20 REAR ARM & SUSPENSION

REF. NO.	PART NO.	DESCRIPTION	BDA2					REMARKS
1	1WD–F2110–00	REAR ARM COMP.	1					MBL2
2	1WD–22141–00	SHAFT, PIVOT	1					
3	1WD–F2129–01	COVER, THRUST 2	2					
4	1WD–F2184–00	BUSH	1					
5	93320–32403	BEARING	2					
6	95602–14200	NUT, SELF-LOCKING	1					
7	1WD–F2151–00	SEAL, GUARD	1					
8	90105–12309	BOLT, FLANGE	1					
9	1WD–F248B–00	COLLAR, ROD 1	1					
10	95602–12100	NUT, U	1					
11	1WD–F2311–01	CASE, CHAIN	1					
12	90387–06242	COLLAR	2					
13	90111–06119	BOLT,HEX. SOCKET BUTTON	2					
14	BS7–F2210–20	SHOCK ABSORBER ASSY, REAR	1					
15	90105–12093	BOLT, FLANGE	1					
16	95602–12100	NUT, U	1					
17	B17–F1668–00	LABEL, TIRE	1					

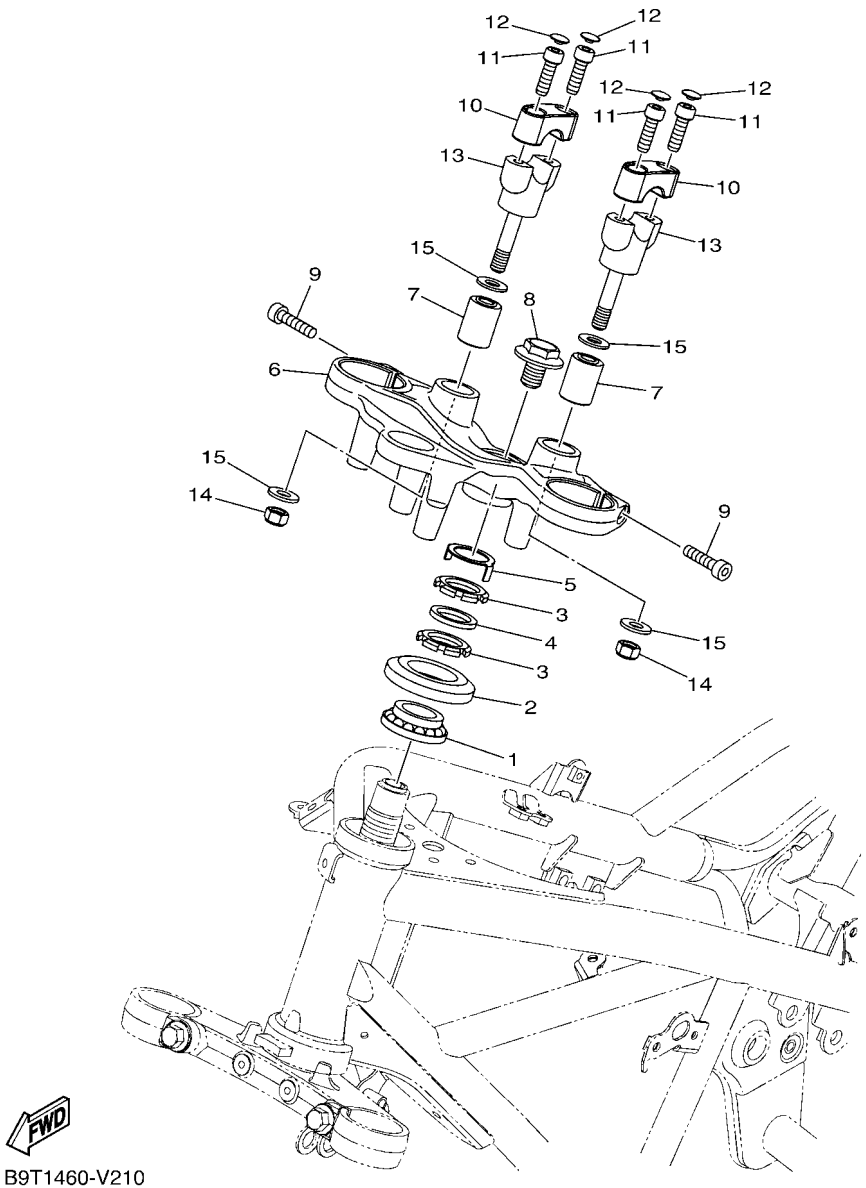

B9T1460-V210

FIG. 21 STEERING

REF. NO.	PART NO.	DESCRIPTION	BDA2					REMARKS
1	93399–999Y3	BEARING	1					
2	5BP–F3416–10	COVER, BALL RACE 2	1					
3	90179–25615	NUT	2					
4	90202–26142	WASHER, PLATE	1					
5	5BP–F3418–00	WASHER, SPECIAL	1					
6	B9T–F3435–00	CROWN, HANDLE	1					
7	90388–10816	DAMPER	2					
8	90105–14102	BOLT, FLANGE	1					
9	91317–08030	BOLT,HEX.SOCKET HEAD	2					
10	B04–F3441–00–P2	HOLDER, HANDLE UPPER	2					MBL2
11	91317–08025	BOLT,HEX.SOCKET HEAD	4					
12	90338–06810	PLUG	4					
13	B9T–F3442–00	HOLDER, HANDLE LOWER	2					
14	95607–10100	NUT, U	2					
15	90201–10074	WASHER, PLATE	4					

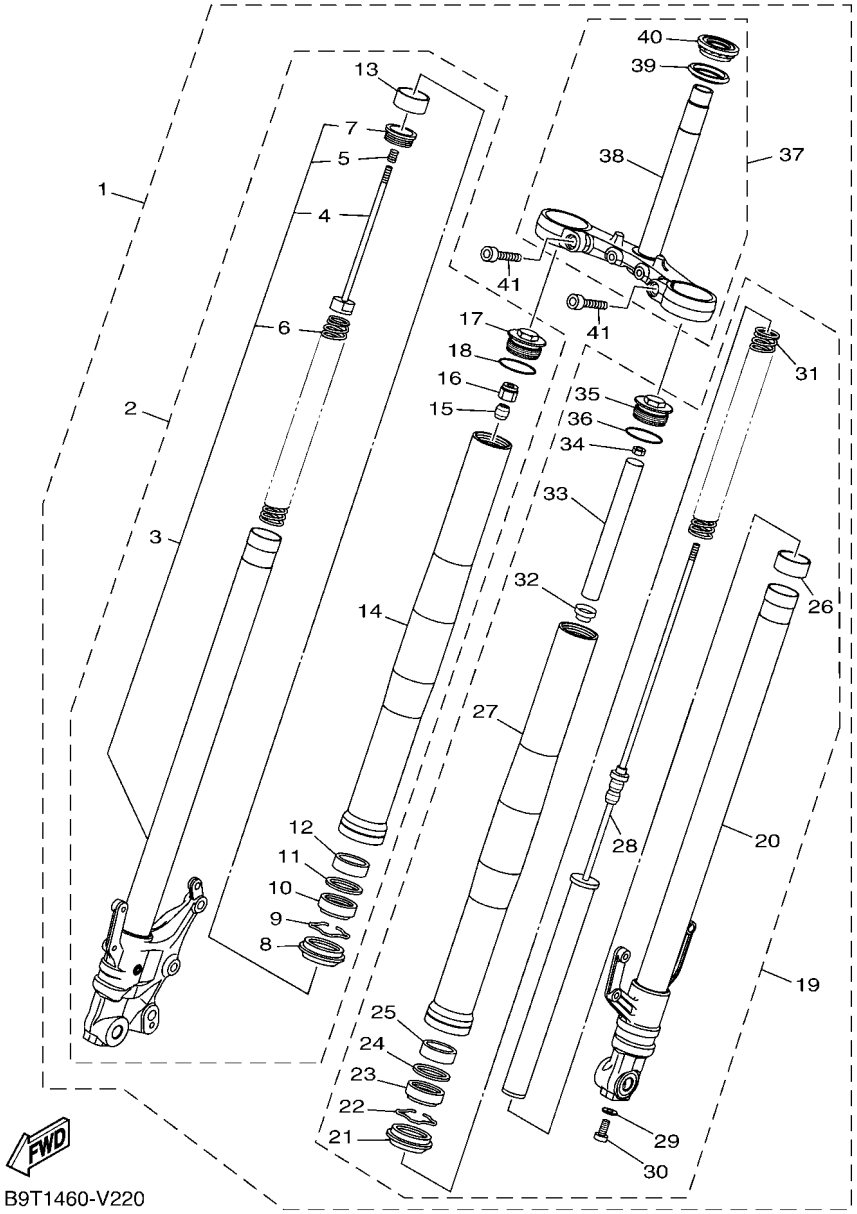

B9T1460-V220

FIG. 22 FRONT FORK

REF. NO.	PART NO.	DESCRIPTION	BDA2					REMARKS
1	B9T–F3100–10	FRONT FORK ASSY	1					
2	B9T–F3103–10	.FRONT FORK ASSY (R.H)	1					
3	B9T–F3120–10	..INNER TUBE COMP.2	1					
4	BK6–F330G–00	...ROD COMP.	1					
5	3AH–22222–00	...SPRING 2	1					
6	B9T–F3141–00	...SPRING, FRONT FORK	1					
7	BK6–F319U–00	...CAP	1					
8	B48–F3144–00	..SEAL, DUST	1					
9	3R4–23153–00	..RING, SNAP	1					
10	BK6–F3145–00	..OIL SEAL	1					
11	31A–23149–31	..WASHER, SPRING UPPER	1					
12	31A–23125–31	..METAL, SLIDE 1	1					
13	BK6–F3171–00	..PISTON, FRONT FORK	1					
14	B9T–F3126–00	..TUBE, OUTER	1					
15	BK6–F332K–00	..BUMP, STOP	1					
16	BK6–F3393–00	..NUT, SPECIAL	1					
17	BS7–F3111–00	..BOLT, CAP	1					
18	4V4–23188–L0	..O-RING	1					
19	B9T–F3102–00	.FRONT FORK ASSY (L.H)	1					
20	BS7–F3110–00	..INNER TUBE COMP.1	1					
21	B48–F3144–00	..SEAL, DUST	1					
22	3R4–23153–00	..RING, SNAP	1					
23	BK6–F3145–00	..OIL SEAL	1					
24	31A–23149–31	..WASHER, SPRING UPPER	1					
25	31A–23125–31	..METAL, SLIDE 1	1					
26	BK6–F3171–00	..PISTON, FRONT FORK	1					
27	B9T–F3126–00	..TUBE, OUTER	1					

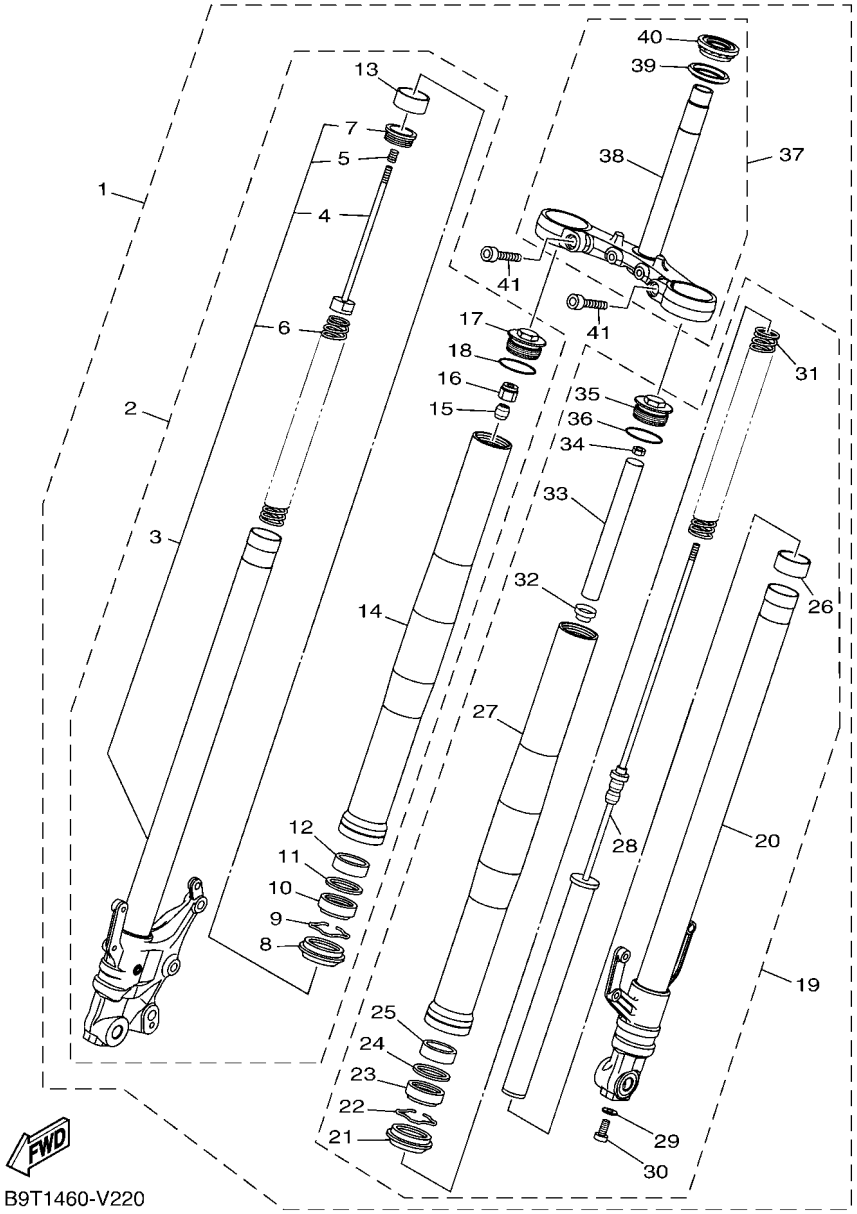

FIG. 22 FRONT FORK

REF. NO.	PART NO.	DESCRIPTION	BDA2					REMARKS
28	B9T–F3170–00	..CYLINDER COMP., FRONT FORK	1					
29	2BU–F3158–00	..GASKET	1					
30	31B–F3181–00	..BOLT, HEXAGON SOCKET HEAD	1					
31	B9T–F3141–00	..SPRING, FRONT FORK	1					
32	BK6–F3117–00	..GUIDE, SPRING	1					
33	BS7–F3118–00	..SPACER	1					
34	BK6–F3357–00	..NUT	1					
35	BS7–F3111–00	..BOLT, CAP	1					
36	4V4–23188–L0	..O-RING	1					
37	BS7–F334M–00	.UNDER BRACKET ASSY.	1					
38	BS7–F3340–00	..UNDER BRACKET COMP.	1					
39	3FV–23462–00	..SEAL, STEERING	1					
40	93399–99932	..BEARING	1					
41	91317–10040	.BOLT,HEX.SOCKET HEAD	2					

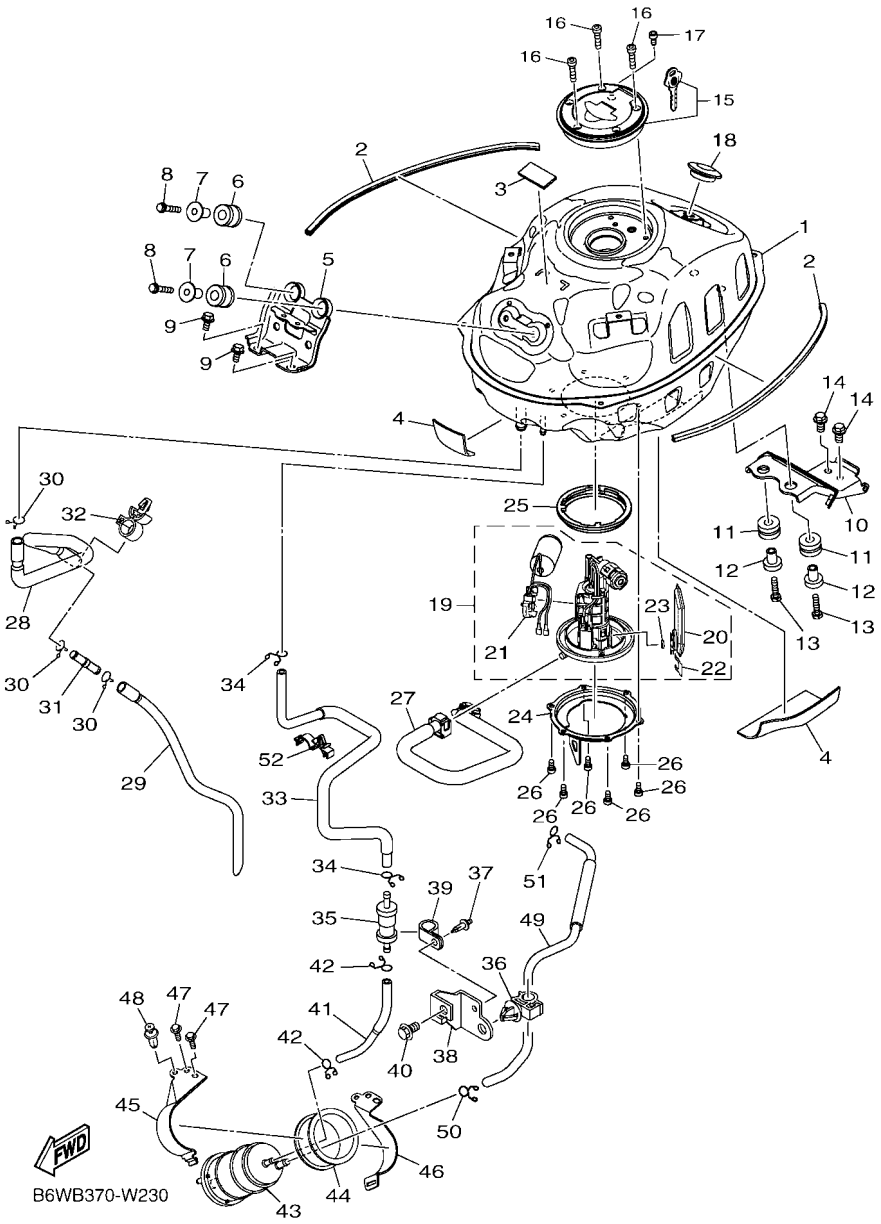

FIG. 23 FUEL TANK

REF. NO.	PART NO.	DESCRIPTION	BDA2					REMARKS
1	BS7–F4110–00	FUEL TANK COMP.	1					
2	BS7–F4188–00	MOLD, FUEL TANK	2					
3	5D9–H2126–00	PAD, BATTERY	1					
4	90520–02843	DAMPER, PLATE	2					
5	B9T–F412Y–00	BRACKET, TANK FITTING	1					
6	90480–18813	GROMMET	2					
7	90387–068M3	COLLAR	2					
8	97022–06030	BOLT, HEXAGON	2					
9	95817–06012	BOLT, FLANGE	2					
10	BS7–F4191–01	BRACKET, FUEL TANK 1	1					
11	90480–15807	GROMMET	2					
12	90387–068S8	COLLAR	2					
13	97022–06030	BOLT, HEXAGON	2					
14	95022–08014	BOLT, FLANGE	2					
15	1WD–WF461–00	CAP ASSY	1					
16	90110–05806	BOLT, HEXAGON SOCKET HEAD	3					
17	91312–05010	BOLT, HEXAGON SOCKET HEAD	1					
18	90480–01806	GROMMET	1					
19	BS7–E3907–01	FUEL PUMP COMP.	1					
20	3C1–E3915–00	.FILTER	1					
21	BS7–H5752–00	.SENDER UNIT ASSY, FUEL METER	1					
22	3C1–F4519–00	.CLIP	1					
23	3C1–24512–00	.GASKET	1					
24	BS7–F4491–00	BRACKET, FUEL PUMP	1					
25	3C1–F4486–00	O-RING	1					
26	91312–05010	BOLT, HEXAGON SOCKET HEAD	6					
27	1WD–E3971–02	PIPE, FUEL 1	1					

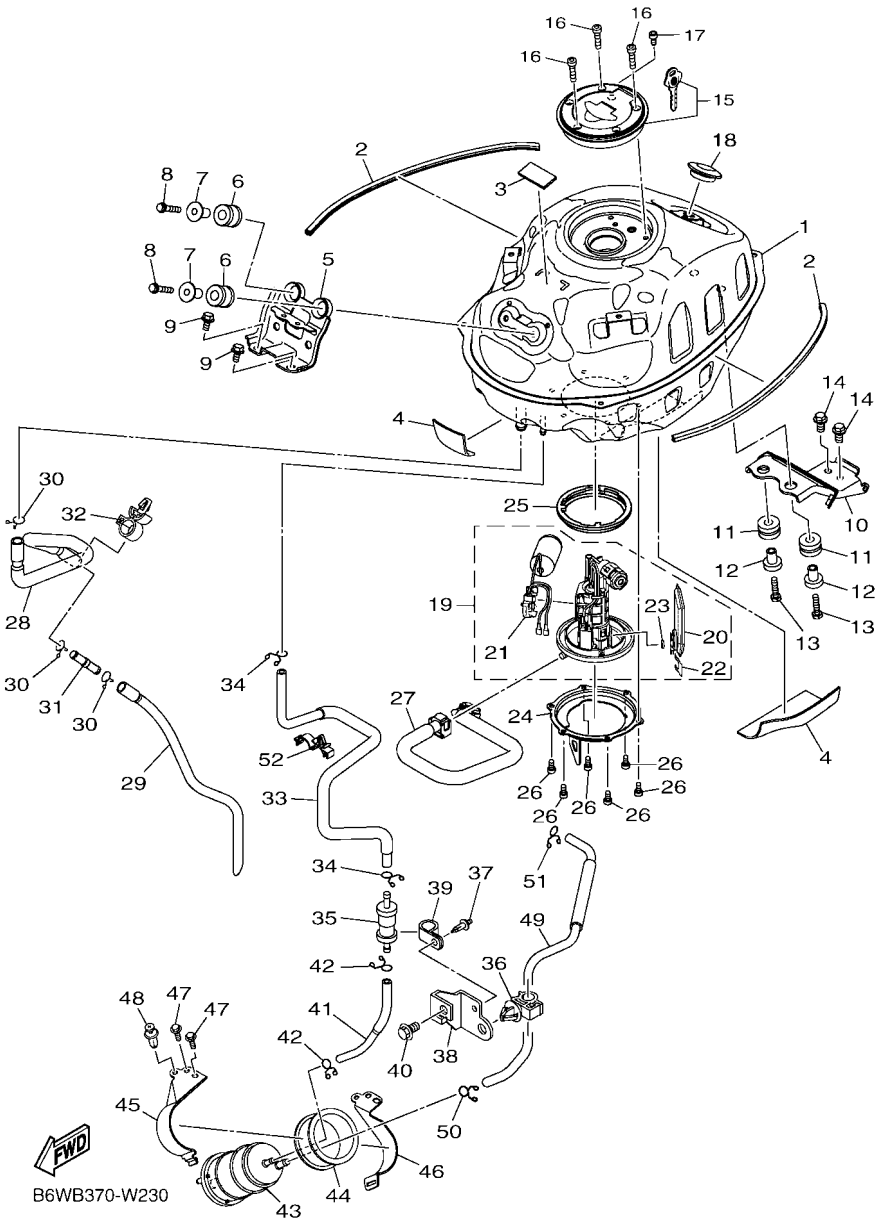

FIG. 23 FUEL TANK

REF. NO.	PART NO.	DESCRIPTION	BDA2					REMARKS
28	1WD–F4312–00	PIPE 2	1					
29	B9T–F4314–00	PIPE 4	1					
30	90467–15012	CLIP	3					
31	1WD–F4376–00	PIPE, JOINT 1	1					
32	90464–16012	CLAMP	1					
33	2MS–F4314–01	PIPE 4	1					
34	90467–09006	CLIP	2					
35	1DW–F4180–02	ROLL OVER VALVE ASSY	1					
36	90464–10008	CLAMP	1					
37	90269–05008	RIVET	1					
38	2MS–F419F–00	BRACKET, CANISTOR	1					
39	90464–15014	CLAMP	1					
40	95027–08012	BOLT, FLANGE	1					
41	2MS–F4315–00	PIPE 5	1					
42	90467–09006	CLIP	2					
43	2MS–F4170–00	CANISTER ASSY	1					
44	2MS–F483H–00	BAND	1					
45	2MS–F115R–00	BRACKET, CANISTER	1					
46	2MS–F134X–00	BRACKET, CANISTER	1					
47	95027–06016	BOLT, FLANGE	2					
48	90269–06816	RIVET	1					
49	2MS–F4316–00	PIPE 6	1					
50	90467–11009	CLIP	1					
51	90467–09006	CLIP	1					
52	90464–16006	CLAMP	1					

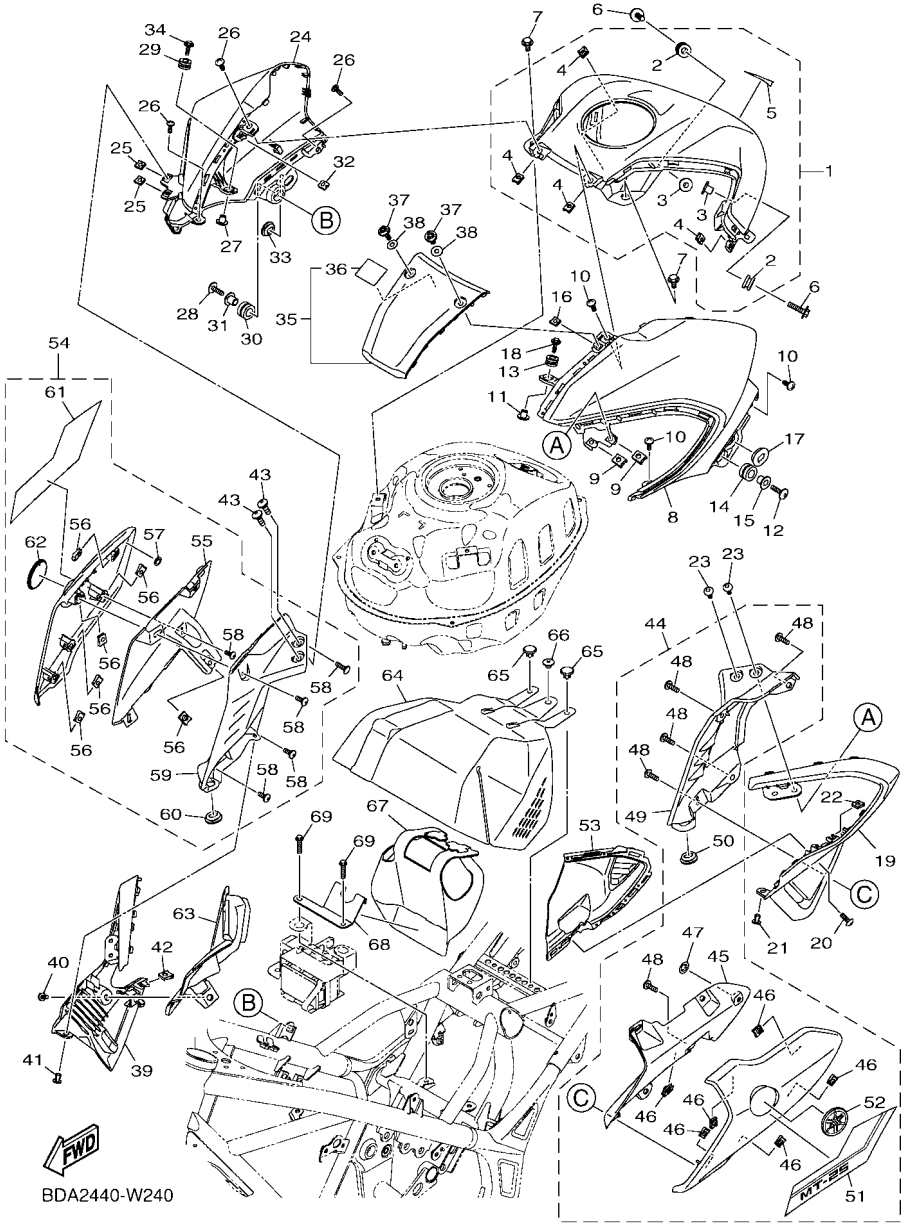

FIG. 24 FUEL TANK 2

REF. NO.	PART NO.	DESCRIPTION	BDA2					REMARKS
1	B9T–XF41D–00–P2	TANK SIDE COVER 1	1					UR FOR DPBMC
	B9T–XF41D–00–3E	TANK SIDE COVER 1	1					UR FOR PGD
2	90480–12808	.GROMMET	2					
3	90387–06899	.COLLAR	2					
4	90183–05807	.NUT, SPRING	4					
5	B04–F4254–A0	.GRAPHIC, FUEL TANK 7	1					UR FOR DPBMC
	B04–F4254–B0	.GRAPHIC, FUEL TANK 7	1					UR FOR PGD
6	90119–06309	BOLT, WITH WASHER	1					
7	90109–068B2	BOLT	2					
8	B9T–F4129–00–P0	COVER, TANK SIDE 1	1					UR FOR DPBMC
	B9T–F4129–00–3E	COVER, SIDE 1	1					UR FOR PGD
9	90183–05807	NUT, SPRING	2					
10	97702–50016	SCREW,TAPPING	3					
11	90387–06899	COLLAR	1					
12	90110–06087	BOLT, HEXAGON SOCKET HEAD	1					
13	90480–12808	GROMMET	1					
14	90480–17007	GROMMET	1					
15	90387–10107	COLLAR	1					
16	90183–05076	NUT, SPRING	1					
17	90480–01559	GROMMET	1					
18	90119–05020	BOLT, WITH WASHER	1					
19	B9T–F838N–00	DUCT 1	1					
20	90160–05009	SCREW, ROUND TAPPING	1					
21	90269–06816	RIVET	1					
22	90183–05807	NUT, SPRING	1					
23	90160–05009	SCREW, ROUND TAPPING	2					
24	B9T–F4139–00–P0	COVER, TANK SIDE 2	1					UR FOR DPBMC

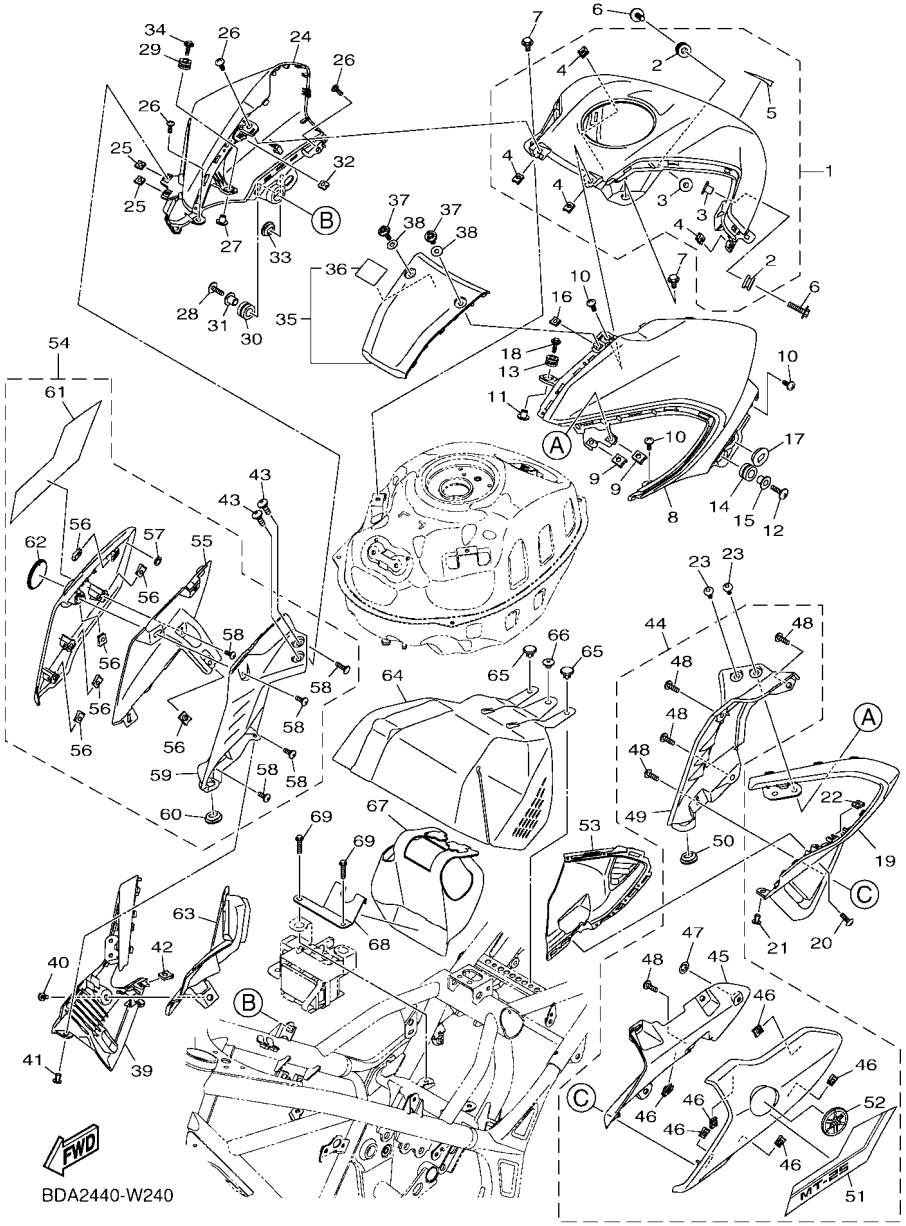

FIG. 24 FUEL TANK 2

REF. NO.	PART NO.	DESCRIPTION	BDA2					REMARKS
24	B9T–F4139–00–3E	COVER, SIDE 2	1					UR FOR PGD
25	90183–05807	NUT, SPRING	2					
26	97702–50016	SCREW,TAPPING	3					
27	90387–06899	COLLAR	1					
28	90110–06087	BOLT, HEXAGON SOCKET HEAD	1					
29	90480–12808	GROMMET	1					
30	90480–17007	GROMMET	1					
31	90387–10107	COLLAR	1					
32	90183–05076	NUT, SPRING	1					
33	90480–01559	GROMMET	1					
34	90119–05020	BOLT, WITH WASHER	1					
35	B9T–XF17D–A1–P0	COVER, TOP	1					UR FOR DPBMC
	B9T–XF17D–90–P4	COVER, TOP	1					UR FOR PGD
36	26P–21568–11	.LABEL, WARNING	1					
37	90111–05056	BOLT,HEX. SOCKET BUTTON	2					
38	90202–05180	WASHER, PLATE	2					
39	B9T–F838R–00	DUCT 2	1					
40	90160–05009	SCREW, ROUND TAPPING	1					
41	90269–06816	RIVET	1					
42	90183–05807	NUT, SPRING	1					
43	90160–05009	SCREW, ROUND TAPPING	2					
44	B9T–XF137–00–P4	SCOOP & GUIDE AIR 1	1					UR FOR DPBMC
	B9T–XF137–00–3E	SCOOP & GUIDE AIR 1	1					UR FOR PGD
45	B9T–F836K–00	.PANEL, INNER 1	1					
46	90183–05807	.NUT, SPRING	6					
47	90183–05M02	.NUT, SPRING	1					
48	97707–50016	.SCREW, TRUSS HEAD TAPPING	5					

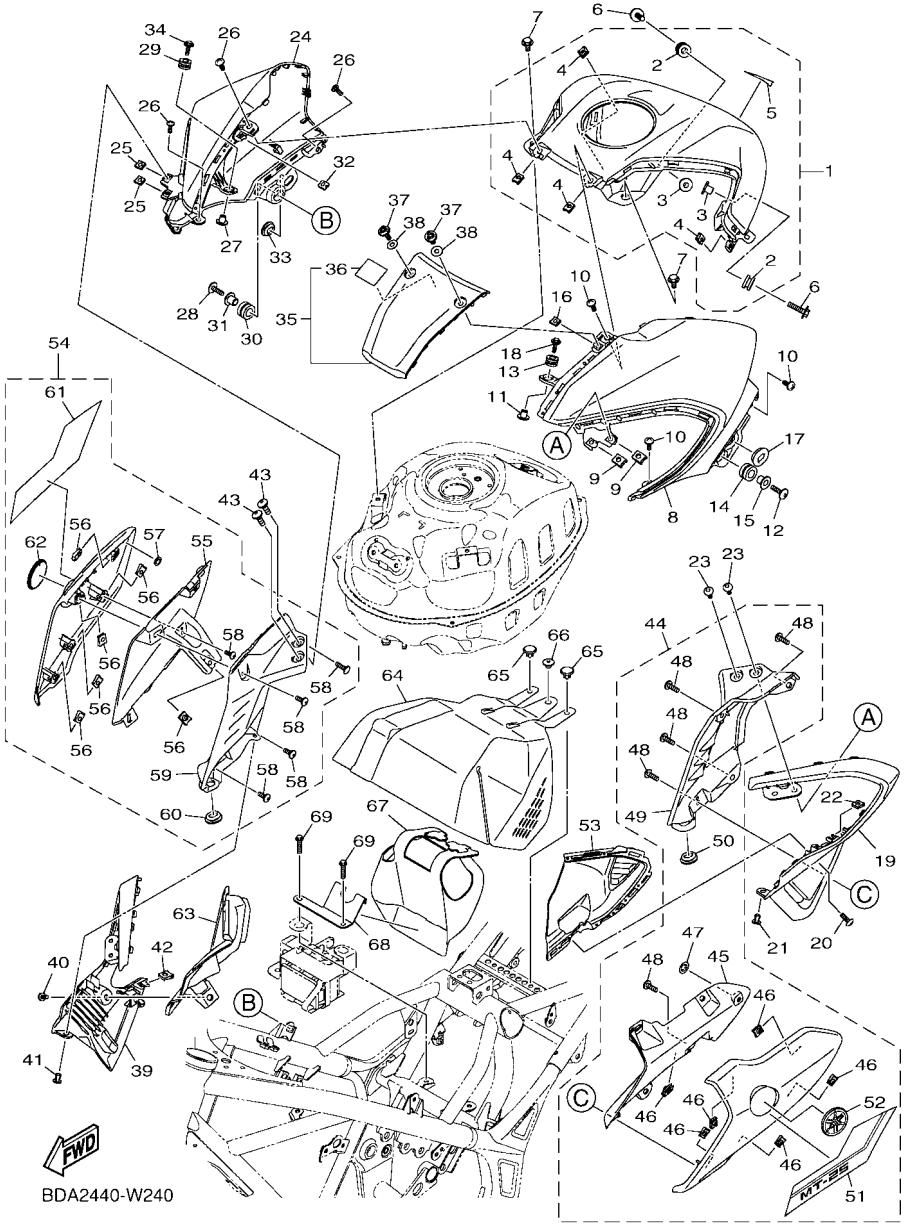

FIG. 24 FUEL TANK 2

REF. NO.	PART NO.	DESCRIPTION	BDA2					REMARKS
49	B9T–F137K–00	.GUIDE, AIR 3	1					
50	90480–01559	.GROMMET	1					
51	B9T–F8391–30	.GRAPHIC 1	1					UR FOR DPBMC
	B9T–F8391–40	.GRAPHIC 1	1					UR FOR PGD
52	1WD–F413B–00	.EMBLEM	1					
53	B9T–F837N–00	GRILL, AIR INTAKE 1	1					
54	B9T–XF13A–00–P4	SCOOP & GUIDE AIR 2	1					UR FOR DPBMC
	B9T–XF13A–00–3E	SCOOP & GUIDE AIR 2	1					UR FOR PGD
55	B9T–F836L–00	.PANEL, INNER 2	1					
56	90183–05807	.NUT, SPRING	6					
57	90183–05M02	.NUT, SPRING	1					
58	97707–50016	.SCREW, TRUSS HEAD TAPPING	5					
59	B9T–F137L–00	.GUIDE, AIR 4	1					
60	90480–01559	.GROMMET	1					
61	B9T–F8392–30	.GRAPHIC 2	1					UR FOR DPBMC
	B9T–F8392–40	.GRAPHIC 2	1					UR FOR PGD
62	1WD–F413B–00	.EMBLEM	1					
63	B9T–F837R–00	GRILL, AIR INTAKE 2	1					
64	B04–E449E–00	COVER, AIR CLEANER	1					
65	90269–07076	RIVET	2					
66	90269–09001	RIVET	1					
67	B04–F1642–00	GUARD, FLAP	1					
68	B04–F1533–00	STAY, FLAP	1					
69	95022–06025	BOLT, FLANGE	2					

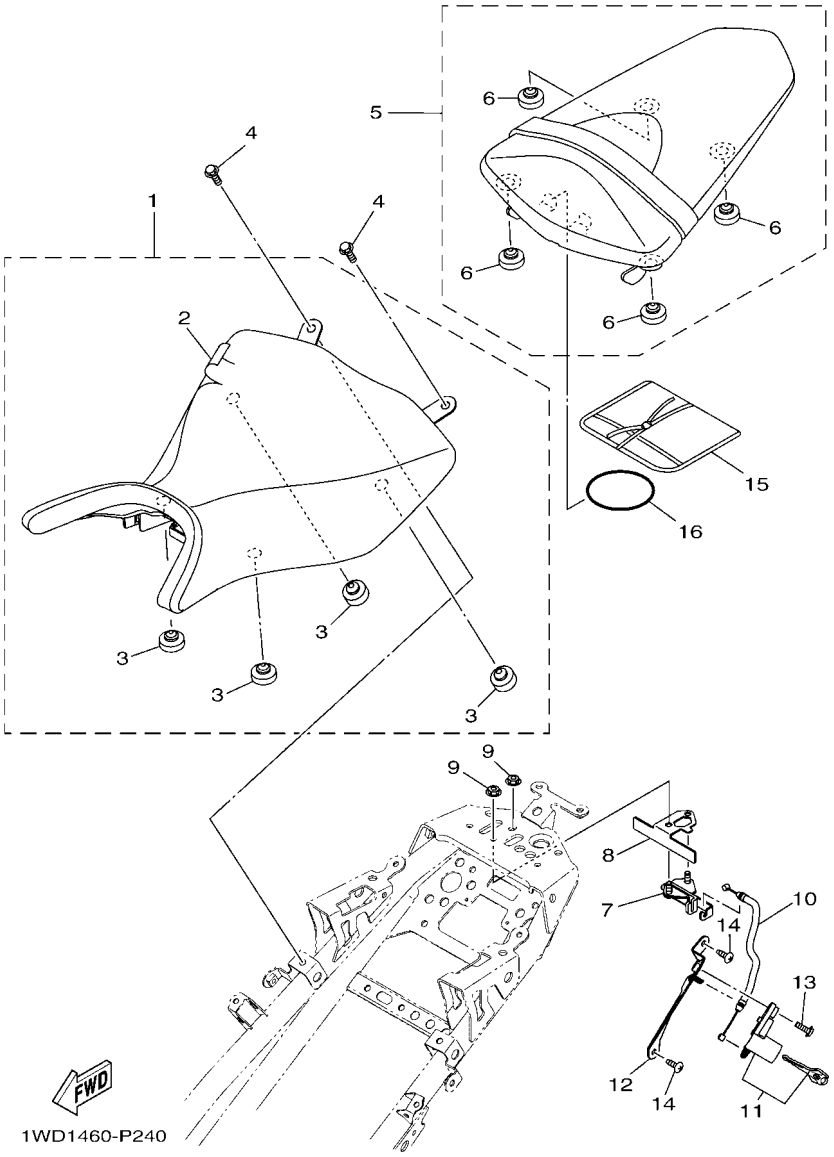

FIG. 25 SEAT

REF. NO.	PART NO.	DESCRIPTION	BDA2					REMARKS
1	1WD–F4710–02	SINGLE SEAT ASSY	1					
2	1WD–F4711–01	.COVER, SINGLE SEAT	1					
3	5BP–F4741–00	.PAD, SEAT	4					
4	95022–06012	BOLT, FLANGE	2					
5	1WD–F4750–01	TANDEM SEAT ASSY	1					
6	3C1–F4741–00	.PAD, SEAT	4					
7	1WD–F4780–00	SEAT LOCK ASSY	1					
8	1WD–F4792–00	PLATE	1					
9	95707–06500	NUT, FLANGE	2					
10	1WD–F478E–00	CABLE, SEAT LOCK	1					
11	1WD–WF479–00	ROTOR SUB ASSY WITH KEY	1					
12	1WD–F117K–00	STAY, LOCK	1					
13	90159–06054	SCREW, WITH WASHER	1					
14	97702–50016	SCREW,TAPPING	2					
15	B9T–F8100–00	TOOL KIT	1					
16	5TL–H2131–00	BAND, BATTERY	1					

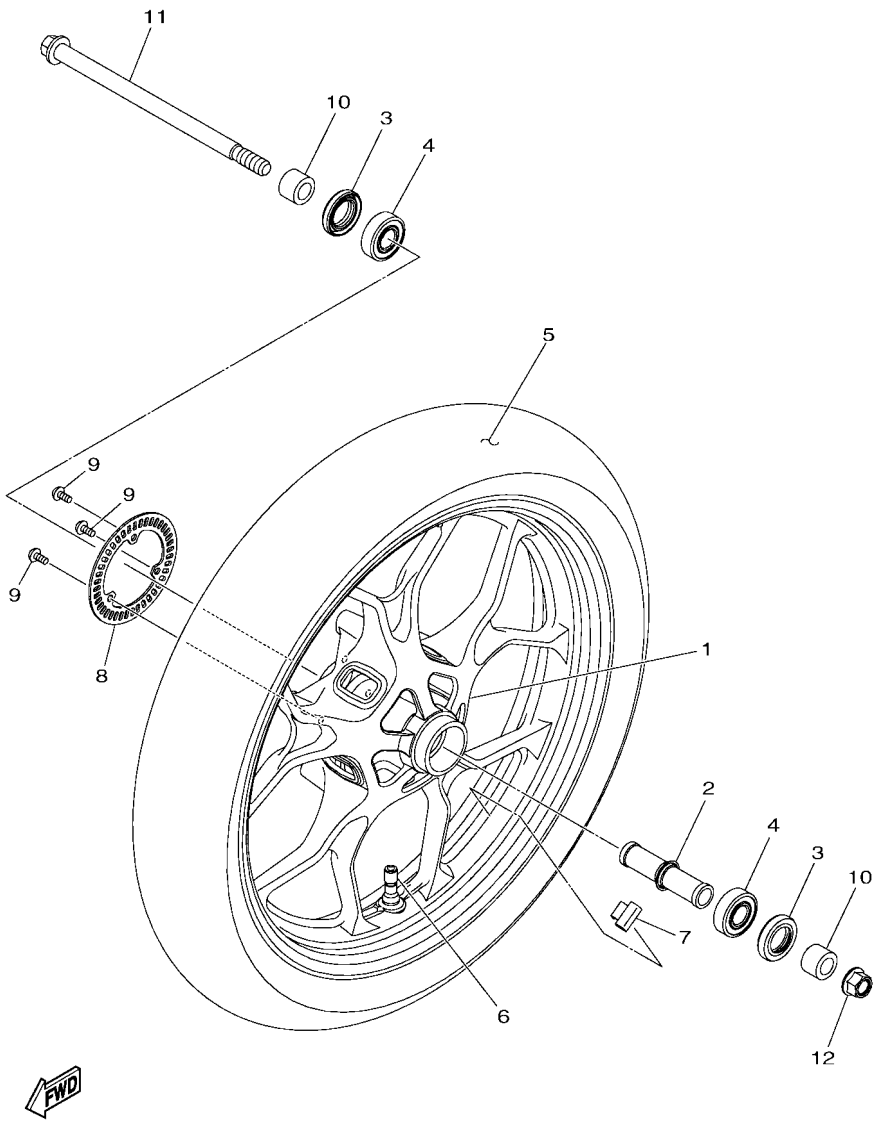

B4W2010-V260

FIG. 26 FRONT WHEEL

REF. NO.	PART NO.	DESCRIPTION	BDA2					REMARKS
1	2WD–F5168–03–P0	CAST WHEEL, FRONT	1					UR FOR DPBMC
	2WD–F5168–03–P1	CAST WHEEL, FRONT	1					UR FOR PGD
2	1WD–F510C–01	COLLAR ASSY.	1					
3	93106–26815	OIL SEAL	2					
4	93306–302X4	BEARING	2					
5	94111–17801	TIRE (110/70-17M/C 54S RX-01F)	1					INOUE
6	93900–00828	VALVE, RIM	1					
7	5MT–25398–00	BALANCER, WHEEL (10G)	1					UN
	5MT–25398–10	BALANCER, WHEEL (20G)	1					UN
	5MT–25398–20	BALANCER, WHEEL (30G)	1					UN
8	2DP–F517G–00	ROTOR, SENSOR	1					
9	90149–05029	SCREW	3					
10	1PA–F5386–00	COLLAR, SPROCKET AXLE	2					
11	1WD–25181–00	AXLE, WHEEL	1					
12	95602–14200	NUT, SELF-LOCKING	1					

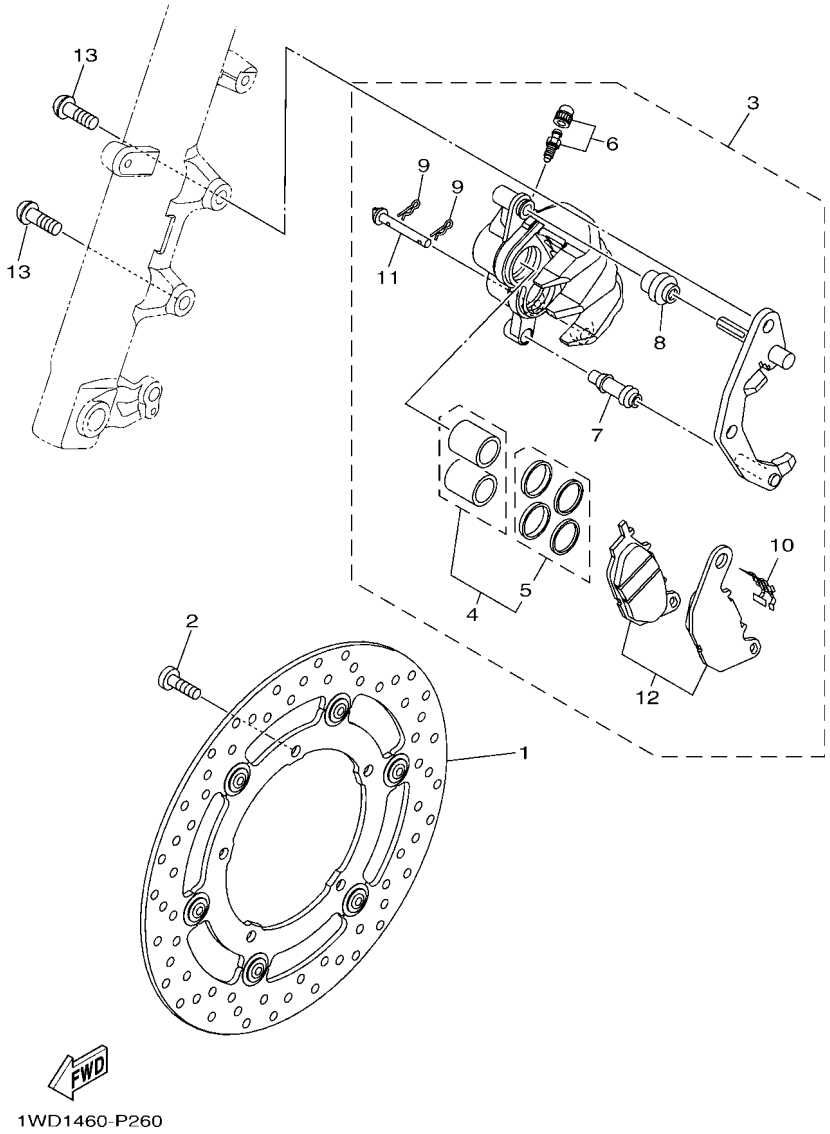

FIG. 27 FRONT BRAKE CALIPER

REF. NO.	PART NO.	DESCRIPTION	BDA2					REMARKS
1	1WD–F581U–01	DISK BRAKE ASSY (RIGHT)	1					
2	90111–08087	BOLT,HEX. SOCKET BUTTON	5					
3	1WD–F580U–01	CALIPER ASSY (RIGHT)	1					
4	1WD–25802–00	.PISTON ASSY, CALIPER	1					
5	1WD–25803–00	..CALIPER SEAL KIT	1					
6	4C9–W0048–00	.BLEED SCREW KIT	1					
7	5YP–F5937–00	.BOOT 2	1					
8	5YP–F5917–00	.BOOT, CALIPER	1					
9	5YP–F5925–01	.CLIP	2					
10	1WD–F5919–00	.SUPPORT, PAD	1					
11	5YP–F5924–00	.PIN, PAD	1					
12	1WD–25805–00	.BRAKE PAD KIT	1					
13	90149–10044	SCREW	2					

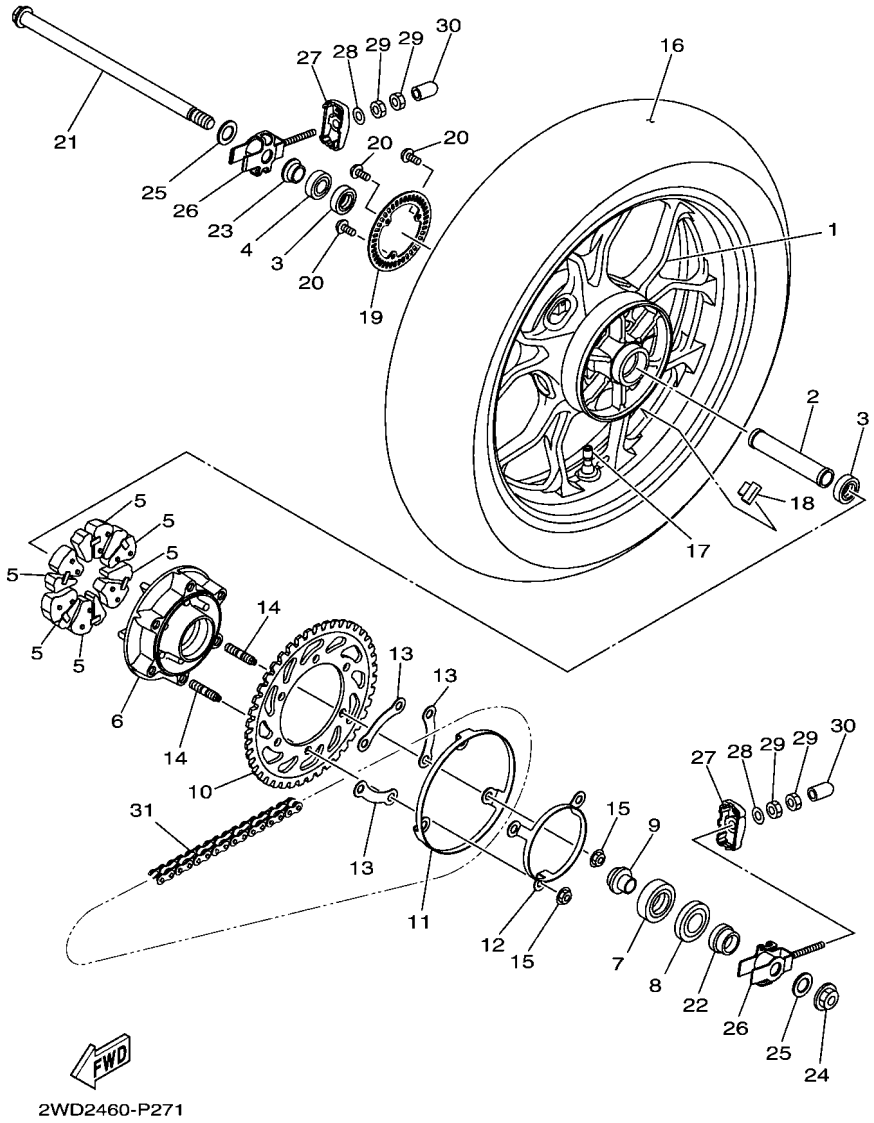

FIG. 28 REAR WHEEL

REF. NO.	PART NO.	DESCRIPTION	BDA2					REMARKS
1	2WD–F5338–03–P0	CAST WHEEL, REAR	1					UR FOR DPBMC
	2WD–F5338–03–P1	CAST WHEEL, REAR	1					UR FOR PGD
2	90387–17810	COLLAR	1					
3	93306–20314	BEARING	2					
4	93106–23002	OIL SEAL	1					
5	1WD–F5364–00	DAMPER	6					
6	1WD–F5366–00–P1	CLUTCH, HUB	1					UR FOR DPBMC
	1WD–F5366–00–P3	CLUTCH, HUB	1					UR FOR PGD
7	93306–30450	BEARING	1					
8	93106–38046	OIL SEAL	1					
9	1WD–F5377–00	COLLAR, WHEEL	1					
10	1WD–F5443–00	SPROCKET, DRIVEN (43T)	1					
11	1WD–F537W–00	BRACKET 1	1					
12	1WD–F537X–00	BRKT 2	1					
13	1WD–F539F–00	PLATE 1	3					
14	90116–10065	BOLT, STUD	6					
15	95602–10200	NUT, S/L FLANGE	6					
16	94114–17802	TIRE (140/70-17M/C 66S RX-01R)	1					INOUE
17	93900–00828	VALVE, RIM	1					
18	5MT–25398–00	BALANCER, WHEEL (10G)	1					UN
	5MT–25398–10	BALANCER, WHEEL (20G)	1					UN
	5MT–25398–20	BALANCER, WHEEL (30G)	1					UN
19	2DP–F517G–00	ROTOR, SENSOR	1					
20	90149–05029	SCREW	3					
21	1WD–25381–00	AXLE, WHEEL	1					
22	1WD–F5386–00	COLLAR, SPROCKET AXLE	1					
23	1WD–F5383–00	COLLAR, WHEEL	1					

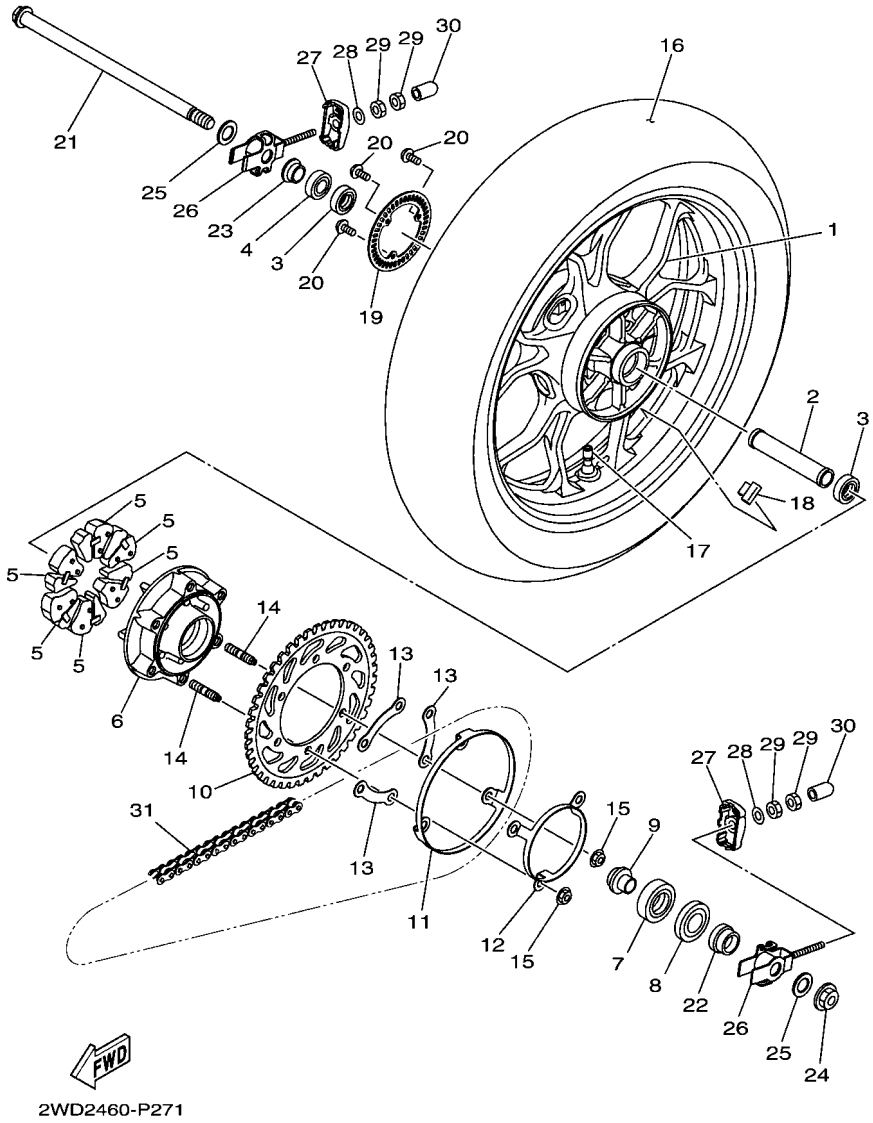

FIG. 28 REAR WHEEL

REF. NO.	PART NO.	DESCRIPTION	BDA2					REMARKS
24	95602–16200	NUT, SELF-LOCKING	1					
25	90201–17809	WASHER, PLATE	2					
26	1WD–F5388–00	PULLER, CHAIN 1	2					
27	1WD–F2174–00	END 1	2					
28	92902–08600	WASHER, PLATE	2					
29	95302–08600	NUT, HEXAGON	4					
30	40D–E443G–00	PIPE, DRAIN 2	2					
31	94568–H3112	CHAIN (DID520VF 112LE)	1					

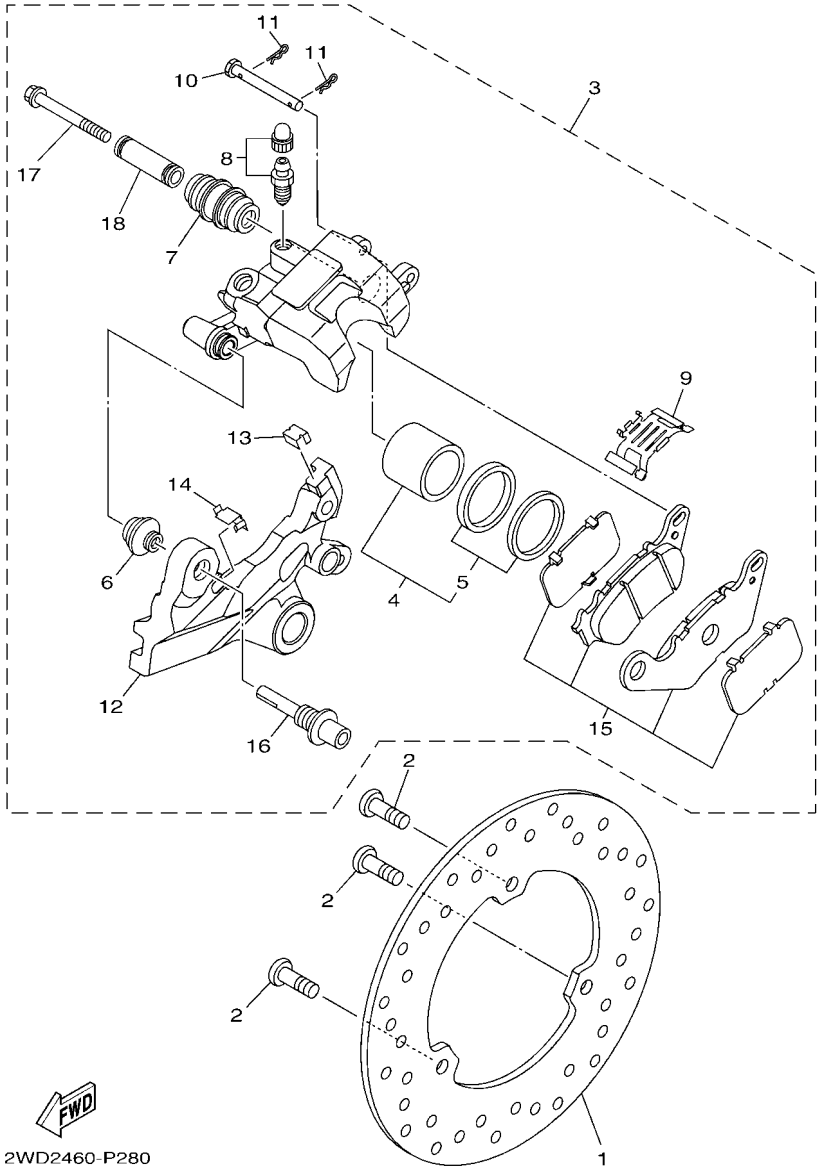

FIG. 29 REAR BRAKE CALIPER

REF. NO.	PART NO.	DESCRIPTION	BDA2					REMARKS
1	1WD–F582W–00	DISK, REAR BRAKE 2	1					
2	90111–08087	BOLT,HEX. SOCKET BUTTON	3					
3	2WD–F580W–00	CALIPER ASSY, REAR 2	1					
4	1WD–25802–50	.PISTON ASSY, CALIPER	1					
5	1WD–25803–50	..CALIPER SEAL KIT	1					
6	5YP–F5917–00	.BOOT, CALIPER	1					
7	34X–25937–00	.BOOT 2	1					
8	5YP–W0048–50	.BLEED SCREW KIT	1					
9	1WD–F5919–50	.SUPPORT, PAD	1					
10	1WD–F5924–50	.PIN, PAD	1					
11	5YP–F5925–01	.CLIP	2					
12	2WD–F5921–50	.BRACKET, SUPPORT	1					
13	1WD–F5939–51	.CLIP, PAD	1					
14	1WD–F5939–61	.CLIP, PAD	1					
15	1WD–25806–00	.BRAKE PAD KIT 2	1					
16	1WD–F5914–50	.PIN, SLIDE	1					
17	5KN–25926–01	.BOLT	1					
18	5TL–F5838–00	.SLEEVE, CALIPER	1					

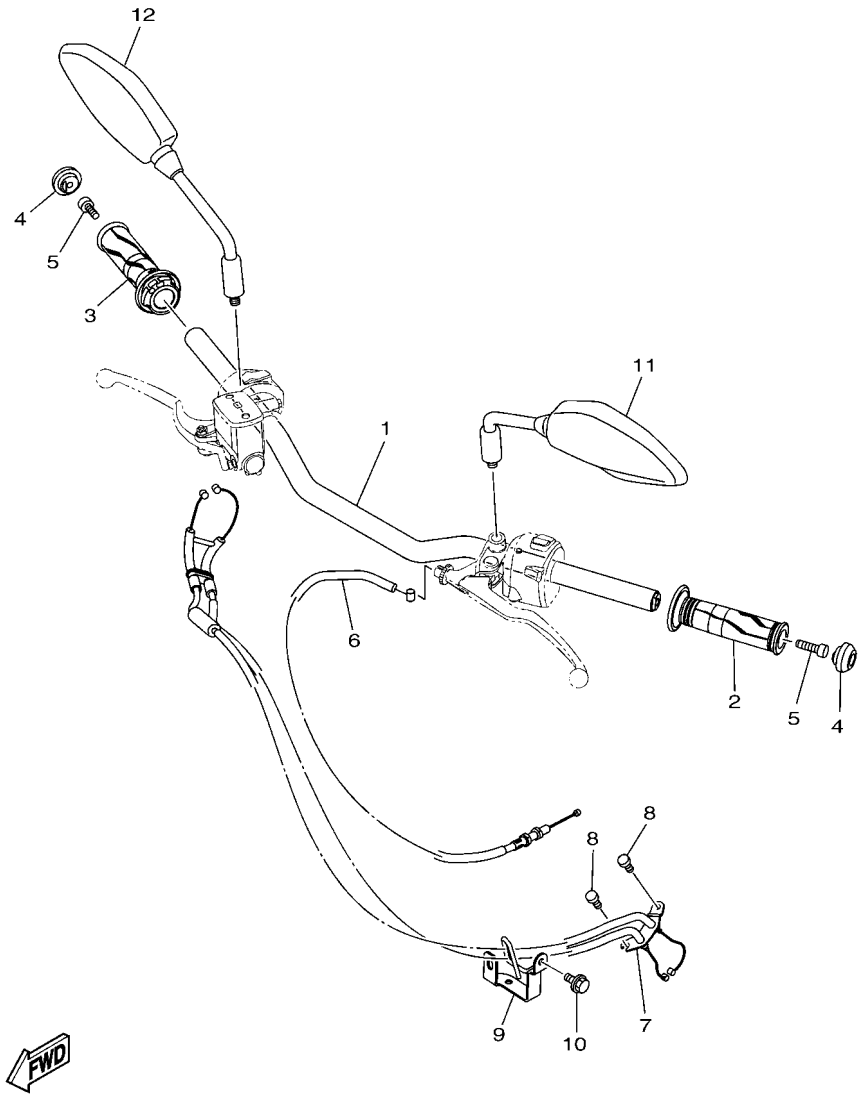

B9T1460-V300

FIG. 30 STEERING HANDLE & CABLE

REF. NO.	PART NO.	DESCRIPTION	BDA2					REMARKS
1	B9T–F6111–00	HANDLEBAR	1					
2	2DP–F6241–00	GRIP	1					
3	2DP–F6240–00	GRIP ASSY	1					
4	1WD–F6246–00	END, GRIP	2					
5	91317–06020	BOLT,HEX.SOCKET HEAD	2					
6	B9T–F6335–00	WIRE, CLUTCH	1					
7	B6W–F6301–00	THROTTLE CABLE ASSY	1					
8	91312–05010	BOLT, HEXAGON SOCKET HEAD	2					
9	B9T–F6315–00	GUIDE, WIRE	1					
10	95802–06010	BOLT, FLANGE	1					
11	B9T–F6280–00	REAR VIEW MIRROR ASSY (LEFT)	1					
12	B9T–F6290–00	REAR VIEW MIRROR ASSY (RIGHT)	1					

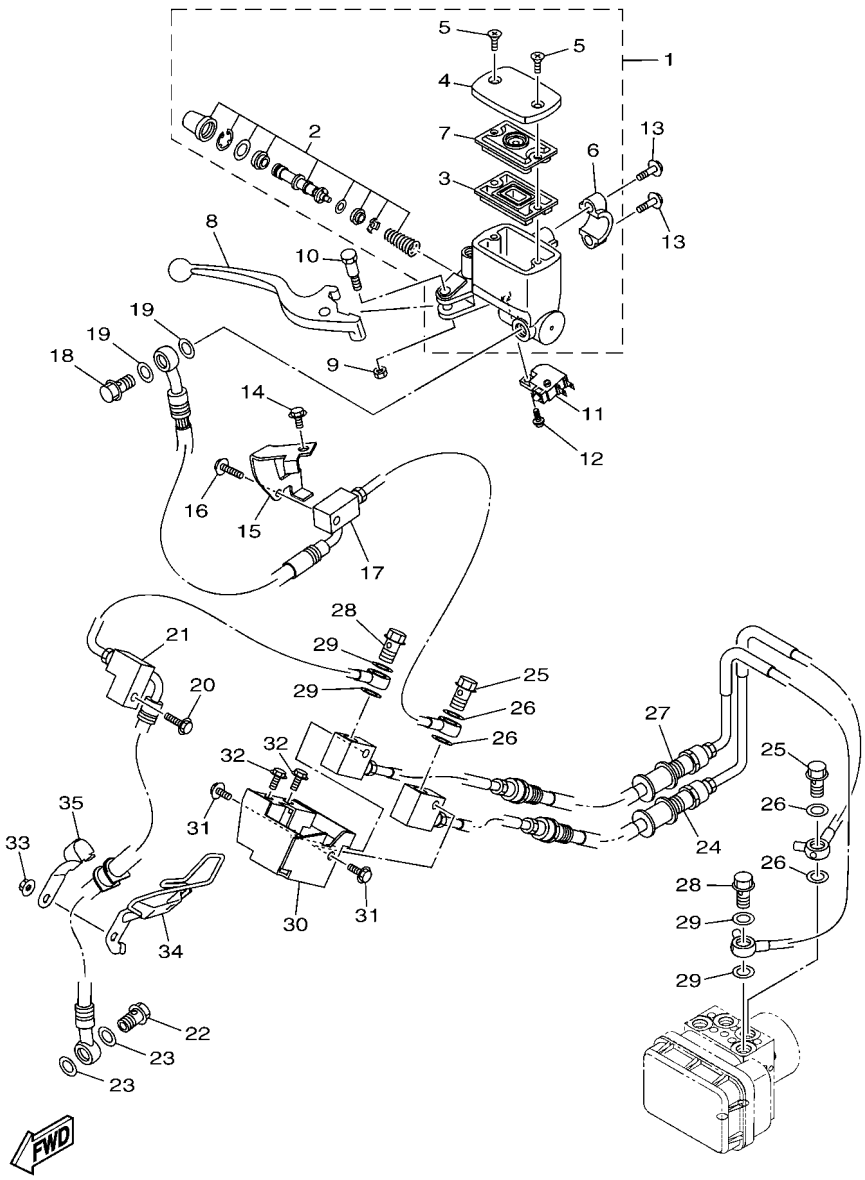

B6W1431-V310

FIG. 31 FRONT MASTER CYLINDER

REF. NO.	PART NO.	DESCRIPTION	BDA2					REMARKS
1	1WD–F5870–00	MASTER CYLINDER SUB ASSY	1					
2	1WD–F5807–00	.CYLINDER KIT, MASTER	1					
3	5RB–25854–00	.DIAPHRAGM, RESERVOIR	1					
4	1WD–F5852–00	.CAP, RESERVOIR	1					
5	36Y–2589H–00	.SCREW	2					
6	3RW–F5867–00	.BRACKET, MASTER CYLINDER	1					
7	3C1–F5855–00	.BUSH,DIAPHRAGM	1					
8	1WD–H3922–00	LEVER 2	1					
9	95602–06100	NUT, SELF-LOCKING	1					
10	90109–06577	BOLT	1					
11	2DP–H3980–01	FRONT STOP SWITCH ASSY	1					
12	97602–04212	SCREW, PAN HEAD WITH WASHER	1					
13	95027–06025	BOLT, FLANGE	2					
14	95D02–06012	BOLT, FLANGE DEEP RECESS	1					
15	2WD–F588F–00	HOLDER, BRAKE HOSE 5	1					
16	95022–06020	BOLT, FLANGE	1					
17	B6W–F5872–00	HOSE, BRAKE 1	1					
18	90401–10812	BOLT, UNION	1					
19	90201–10118	WASHER, PLATE	2					
20	95022–06020	BOLT, FLANGE	1					
21	B6W–F581J–00	HOSE, BRAKE 4	1					
22	90401–10812	BOLT, UNION	1					
23	90201–10118	WASHER, PLATE	2					
24	2WD–F5873–00	HOSE, BRAKE 2	1					
25	90401–10812	BOLT, UNION	2					
26	90201–10118	WASHER, PLATE	4					
27	B5L–F5874–00	HOSE, BRAKE 3	1					

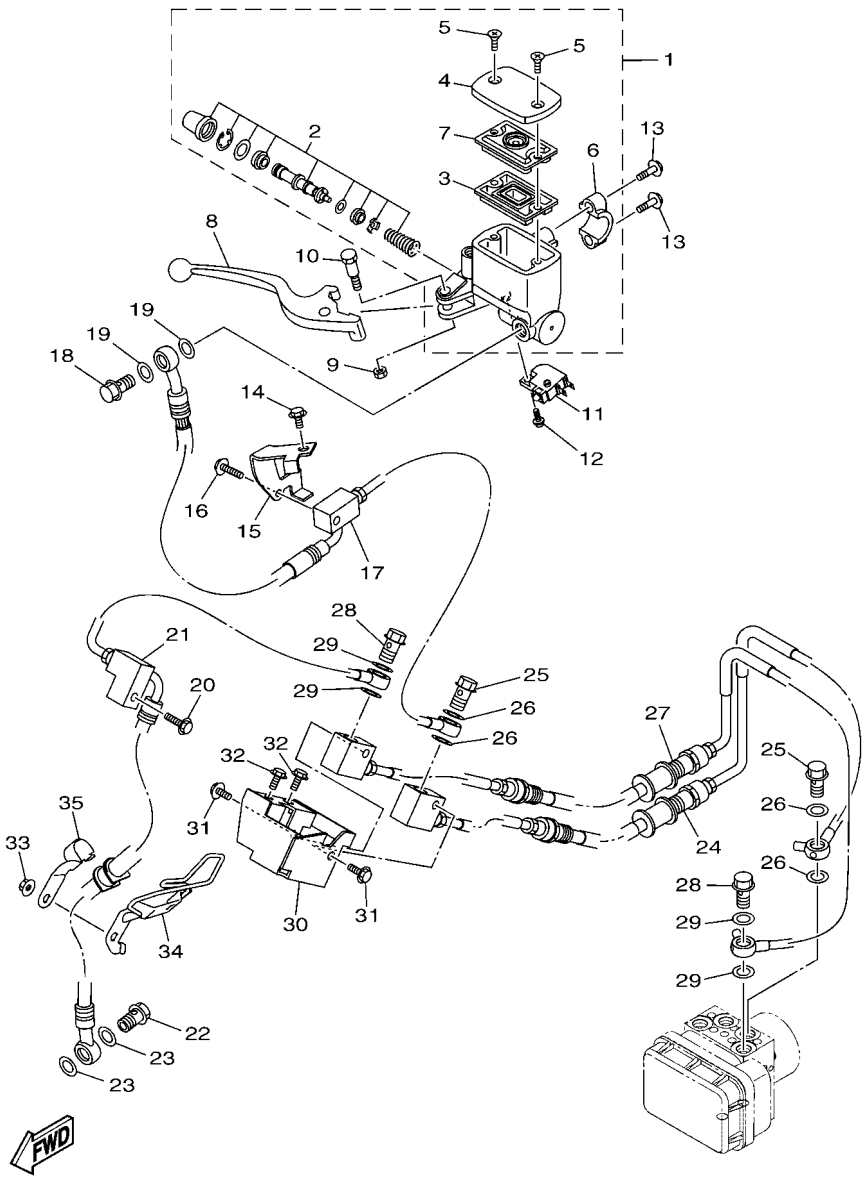

B6W1431-V310

FIG. 31 FRONT MASTER CYLINDER

REF. NO.	PART NO.	DESCRIPTION	BDA2					REMARKS
28	90401–10812	BOLT, UNION	2					
29	90201–10118	WASHER, PLATE	4					
30	2WD–F588G–00	HOLDER, BRAKE HOSE 6	1					
31	95027–06012	BOLT, FLANGE	2					
32	95027–06012	BOLT, FLANGE	2					
33	90176–06065	NUT, CROWN	1					
34	B6W–F5887–00	HOLDER, BRAKE HOSE 3	1					
35	B5L–F587A–00	HOLDER, BRAKE HOSE 4	1					

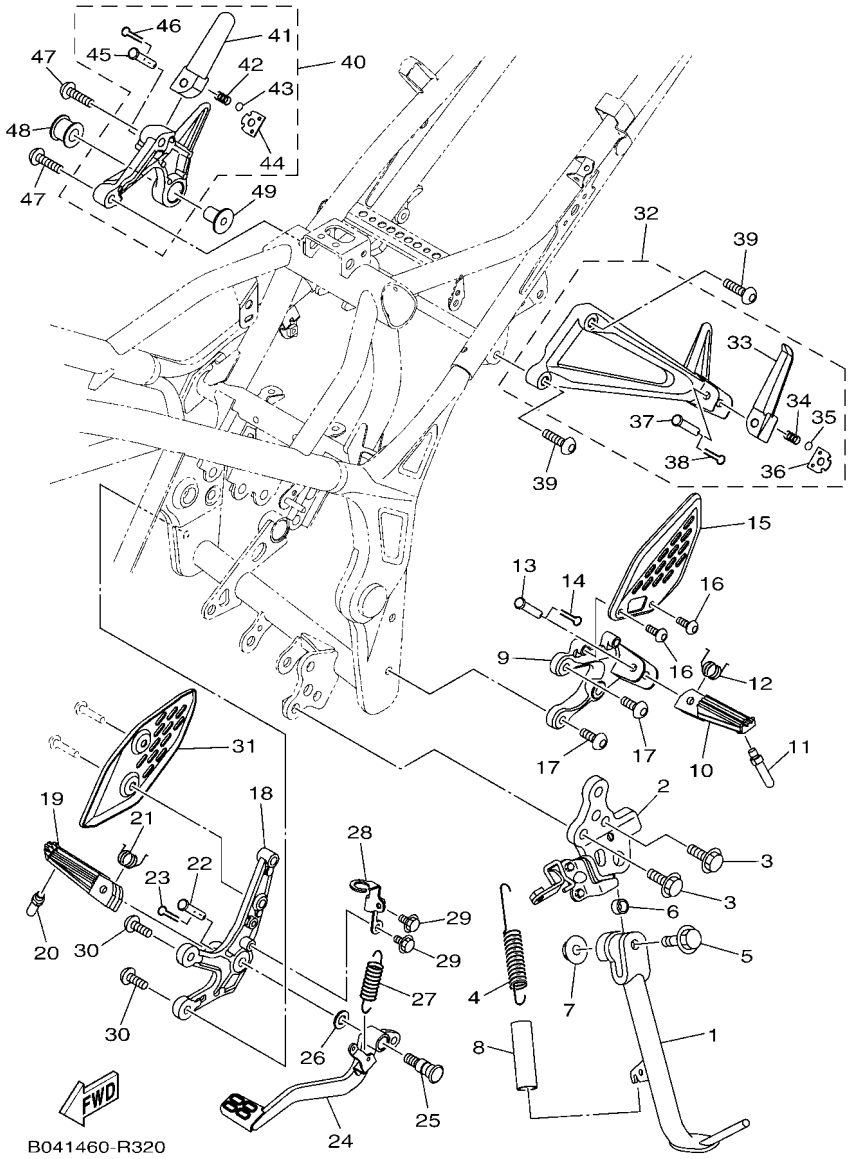

FIG. 32 STAND & FOOTREST

REF. NO.	PART NO.	DESCRIPTION	BDA2					REMARKS
1	1WD–F7311–00	STAND, SIDE	1					
2	B04–F7321–00	BRACKET, SIDE STAND	1					
3	95817–10025	BOLT, FLANGE	2					
4	90506–23812	SPRING, TENSION	1					
5	90105–106A7	BOLT, FLANGE	1					
6	90387–10010	COLLAR	1					
7	95602–10200	NUT, S/L FLANGE	1					
8	90445–217G3	HOSE (L70)	1					
9	1WD–F7442–01	BRACKET 2	1					
10	1WD–F7451–00	FOOTREST	1					
11	1WD–F7435–00	BOLT	1					
12	90508–183B9	SPRING, TORSION	1					
13	90240–08145	PIN, CLEVIS	1					
14	91401–25015	PIN, COTTER	1					
15	1WD–F7445–00	PLATE 1	1					
16	90111–06013	BOLT,HEX. SOCKET BUTTON	2					
17	90109–085G6	BOLT	2					
18	1WD–F7443–00	BRACKET 3	1					
19	1WD–F7461–00	FOOTREST	1					
20	1WD–F7435–00	BOLT	1					
21	90508–183B9	SPRING, TORSION	1					
22	90240–08145	PIN, CLEVIS	1					
23	91401–25015	PIN, COTTER	1					
24	1WD–F7211–00	PEDAL, BRAKE	1					
25	4BP–27261–00	SHAFT	1					
26	90201–10021	WASHER, PLATE	1					
27	90506–26807	SPRING, TENSION	1					

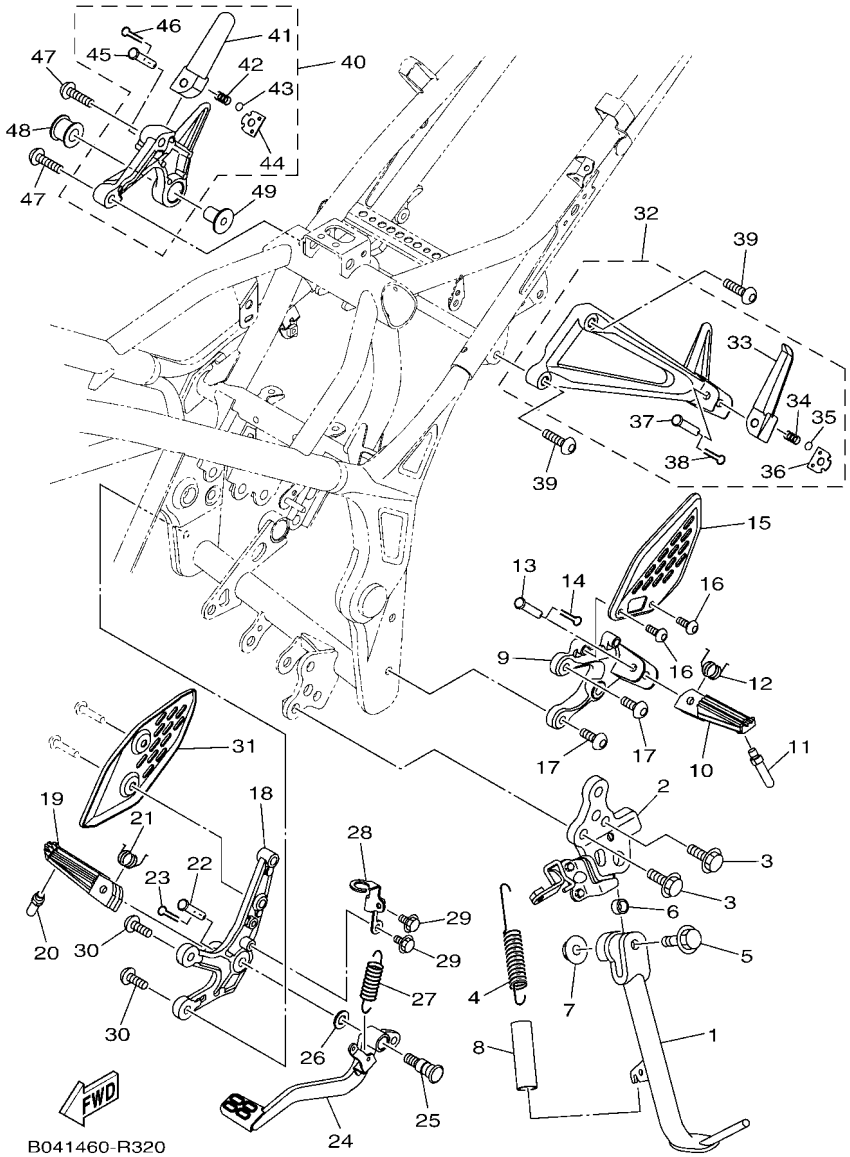

FIG. 32 STAND & FOOTREST

REF. NO.	PART NO.	DESCRIPTION	BDA2					REMARKS
28	1WD–F144G–00	STAY, STOP SWITCH	1					
29	95802–06010	BOLT, FLANGE	2					
30	90109–085G6	BOLT	2					
31	1WD–F7446–00	PLATE 2	1					
32	1WD–F7430–01	REAR FOOTREST ASSY 1	1					
33	1WD–F7431–01	.FOOTREST, REAR 1	1					
34	90501–12743	.SPRING, COMPRESSION	1					
35	93501–04830	.BALL	1					
36	1WD–F7437–00	.WASHER, SPECIAL	1					
37	90240–08145	.PIN, CLEVIS	1					
38	91401–25015	.PIN, COTTER	1					
39	90110–08071	BOLT, HEXAGON SOCKET HEAD	2					
40	1WD–F7440–01	REAR FOOTREST ASSY 2	1					
41	1WD–F7441–01	.FOOTREST, REAR 2	1					
42	90501–12743	.SPRING, COMPRESSION	1					
43	93501–04830	.BALL	1					
44	1WD–F7437–00	.WASHER, SPECIAL	1					
45	90240–08145	.PIN, CLEVIS	1					
46	91401–25015	.PIN, COTTER	1					
47	90110–08071	BOLT, HEXAGON SOCKET HEAD	2					
48	5TP–E4747–00	DAMPER, MUFFLER	1					
49	90387–08813	COLLAR	1					

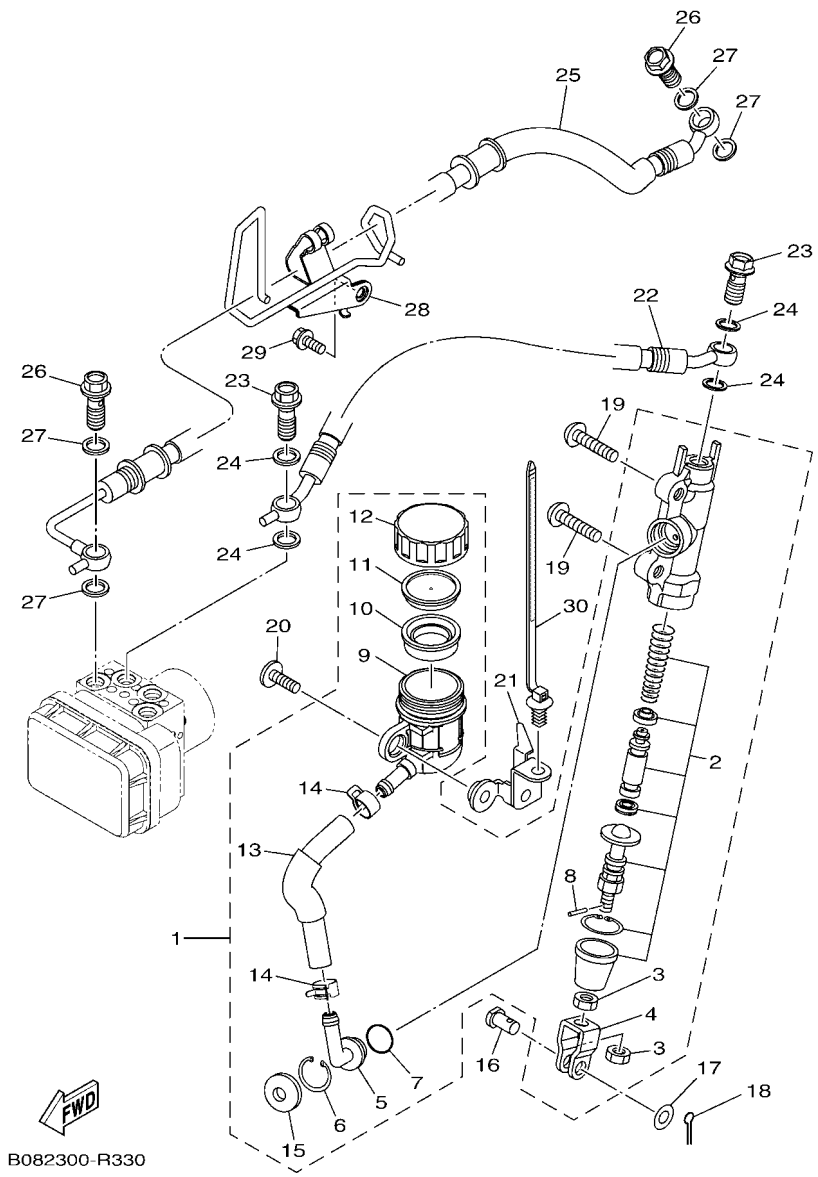

FIG. 33 REAR MASTER CYLINDER

REF. NO.	PART NO.	DESCRIPTION	BDA2					REMARKS
1	1WD–F580E–00	REAR MASTER CYLINDER ASSY	1					
2	1WD–F5808–00	.CYLINDER KIT, MASTER	1					
3	4SS–27218–00	.NUT	2					
4	50C–F7222–00	.JOINT	1					
5	50C–F582A–50	.JOINT	1					
6	50C–F5866–00	.CIRCLIP	1					
7	93210–15620	.O-RING	1					
8	3KW–27234–00	.PIN, BRAKE ROD	1					
9	50C–F5894–10	.TANK, RESERVOIR	1					
10	2VN–F5854–00	.DIAPHRAGM, RESERVOIR	1					
11	50C–F5855–00	.BUSH,DIAPHRAGM	1					
12	1WD–F5852–50	.CAP, RESERVOIR	1					
13	1WD–F5895–50	.HOSE, RESERVOIR	1					
14	90467–12085	.CLIP	2					
15	50C–F589A–00	.COVER, DUST	1					
16	90240–08124	PIN, CLEVIS	1					
17	90201–08083	WASHER, PLATE	1					
18	91401–20012	PIN, COTTER	1					
19	92012–08030	BOLT, BUTTON HEAD	2					
20	90111–06121	BOLT,HEX. SOCKET BUTTON	1					
21	B04–F582E–00	HOLDER, RESERVE TANK	1					
22	2WD–F581K–00	HOSE, BRAKE 5	1					
23	90401–10812	BOLT, UNION	2					
24	90201–10118	WASHER, PLATE	4					
25	2WD–F582J–00	HOSE, BRAKE 6	1					
26	90401–10812	BOLT, UNION	2					
27	90201–10118	WASHER, PLATE	4					

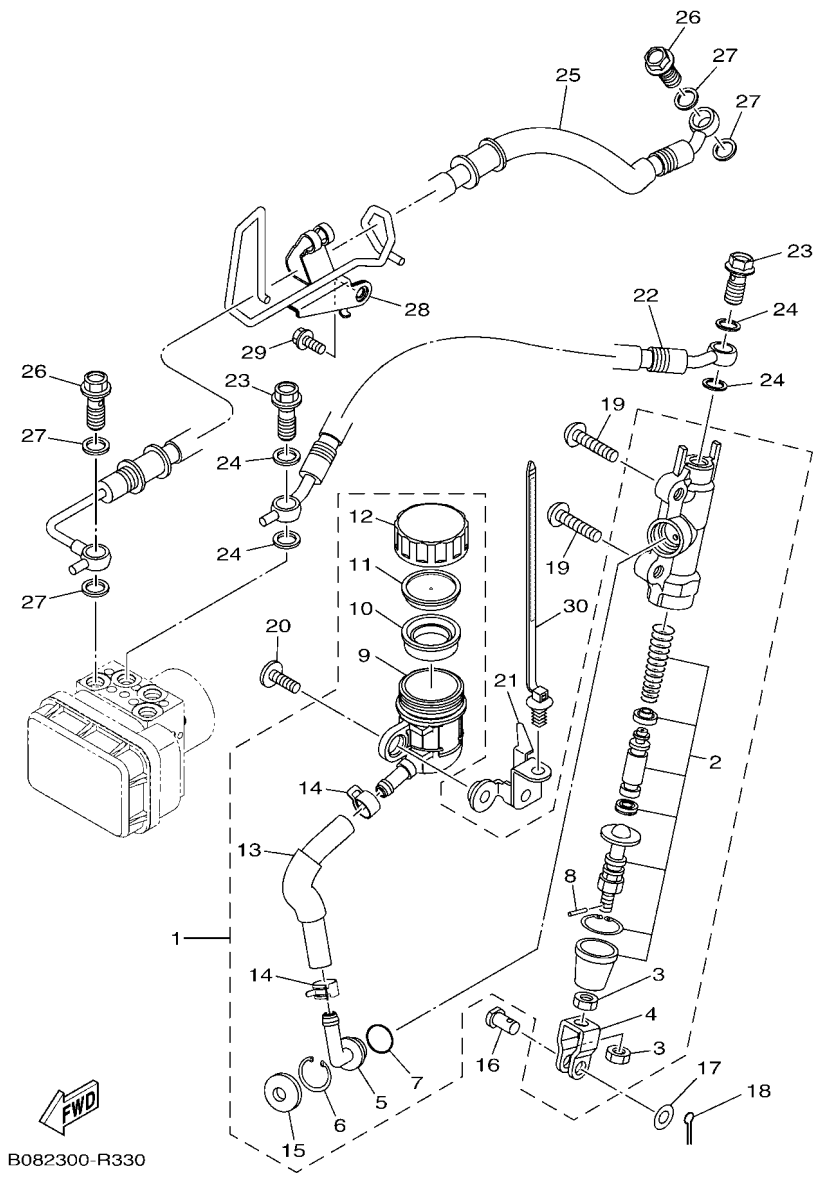

FIG. 33 REAR MASTER CYLINDER

REF. NO.	PART NO.	DESCRIPTION	BDA2					REMARKS
28	2WD–F5887–00	HOLDER, BRAKE HOSE	1					
29	95D37–06014	BOLT, FLANGE DEEP RECESS	1					
30	90464–30009	CLAMP	1					

FIG. 34 GENERATOR

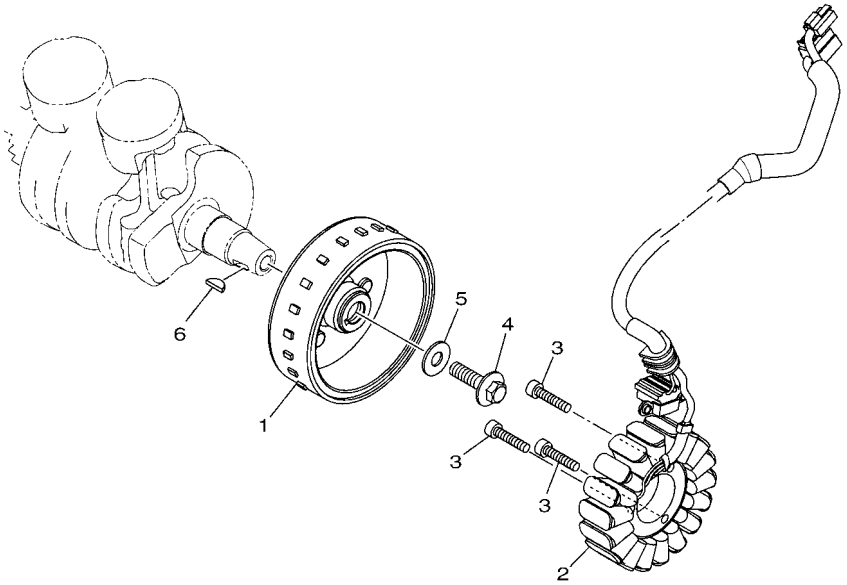

B6P2516-U350

REF. NO.	PART NO.	DESCRIPTION	BDA2					REMARKS
1	BR5–H1450–00	ROTOR ASSY	1					
2	BS7–H1410–00	STATOR ASSY	1					
3	90110–06177	BOLT, HEXAGON SOCKET HEAD	3					
4	90105–10883	BOLT, FLANGE	1					
5	90201–10848	WASHER, PLATE	1					
6	90280–05013	KEY, WOODRUFF	1					

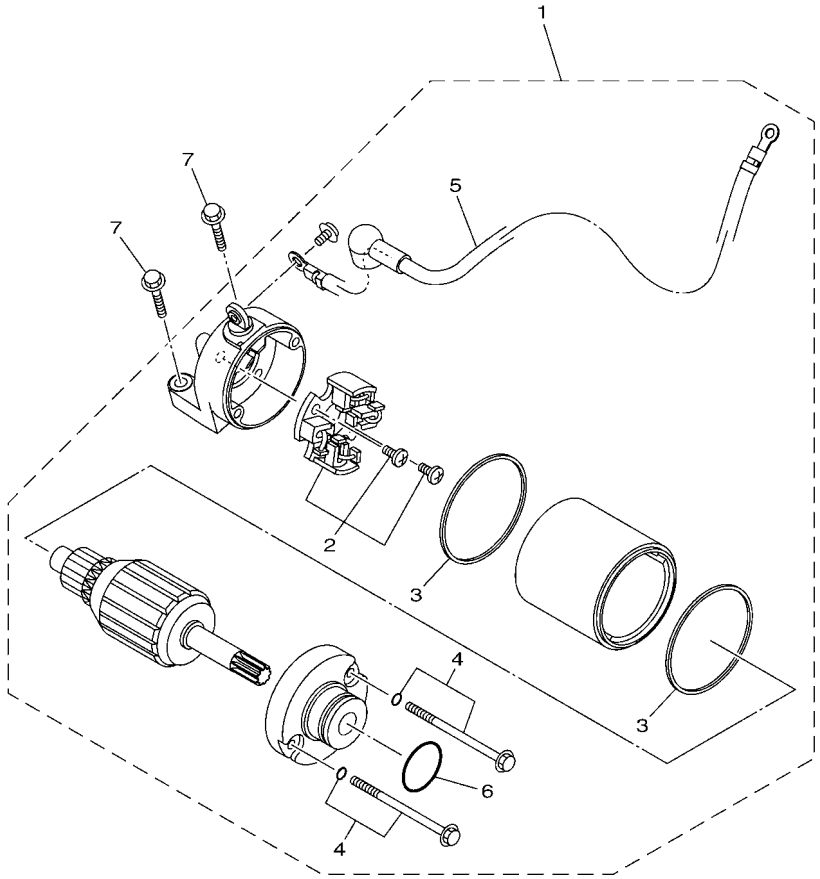

1WD1460-P360

FIG. 35 STARTING MOTOR

REF. NO.	PART NO.	DESCRIPTION	BDA2					REMARKS
1	1WD–H1800–00	STARTING MOTOR ASSY	1					
2	1WD–H1801–00	.BRUSH SET	1					
3	1WD–H1861–00	.GASKET	2					
4	1WD–H1828–00	.BOLT 2	2					
5	1WD–H183G–00	.CORD COMP.	1					
6	4FP–H182L–00	.O-RING 1	1					
7	95022–06025	BOLT, FLANGE	2					

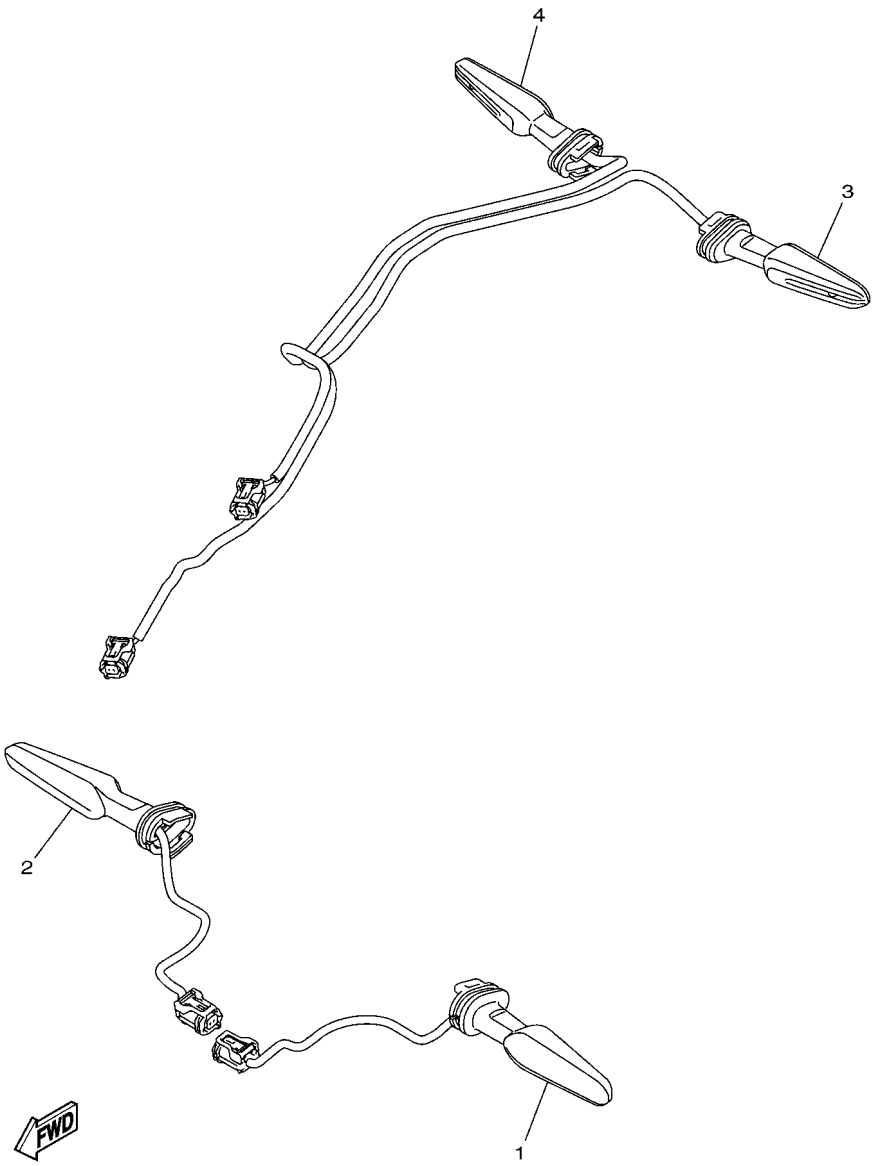

B9T1460-V360

FIG. 36 FLASHER LIGHT

REF. NO.	PART NO.	DESCRIPTION	BDA2					REMARKS
1	B9T–H3310–00	FRONT FLASHER LIGHT ASSY 1	1					
2	B9T–H3320–00	FRONT FLASHER LIGHT ASSY 2	1					
3	B9T–H3330–00	REAR FLASHER LIGHT ASSY 1	1					
4	B9T–H3340–00	REAR FLASHER LIGHT ASSY 2	1					

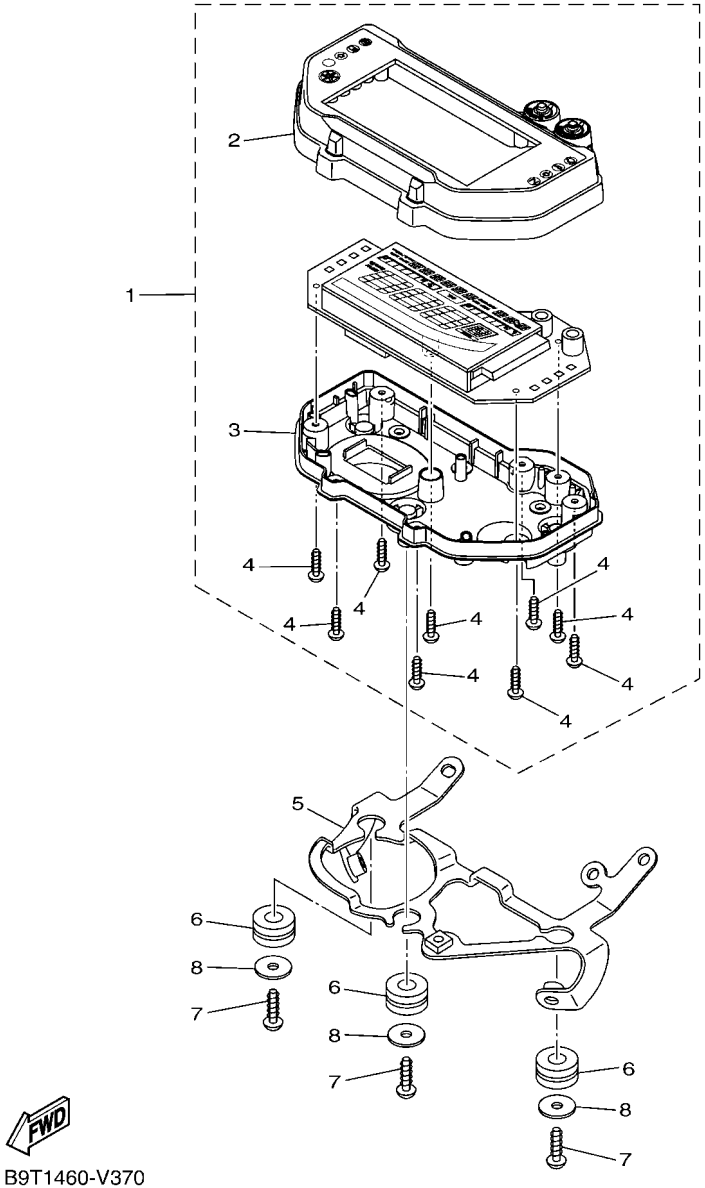

B9T1460-V370

FIG. 37 METER

REF. NO.	PART NO.	DESCRIPTION	BDA2					REMARKS
1	B4W–H3500–01	METER ASSY	1					
2	B5P–H3571–00	.CASE, SPEEDOMETER UPPER	1					
3	BS7–H3572–01	.CASE, SPEEDOMETER LOWER	1					
4	97707–30020	.SCREW, TAPPING	9					
5	B9T–H3519–00	BRACKET, METER	1					
6	90480–14229	GROMMET	3					
7	97702–50016	SCREW,TAPPING	3					
8	90201–05827	WASHER, PLATE	3					

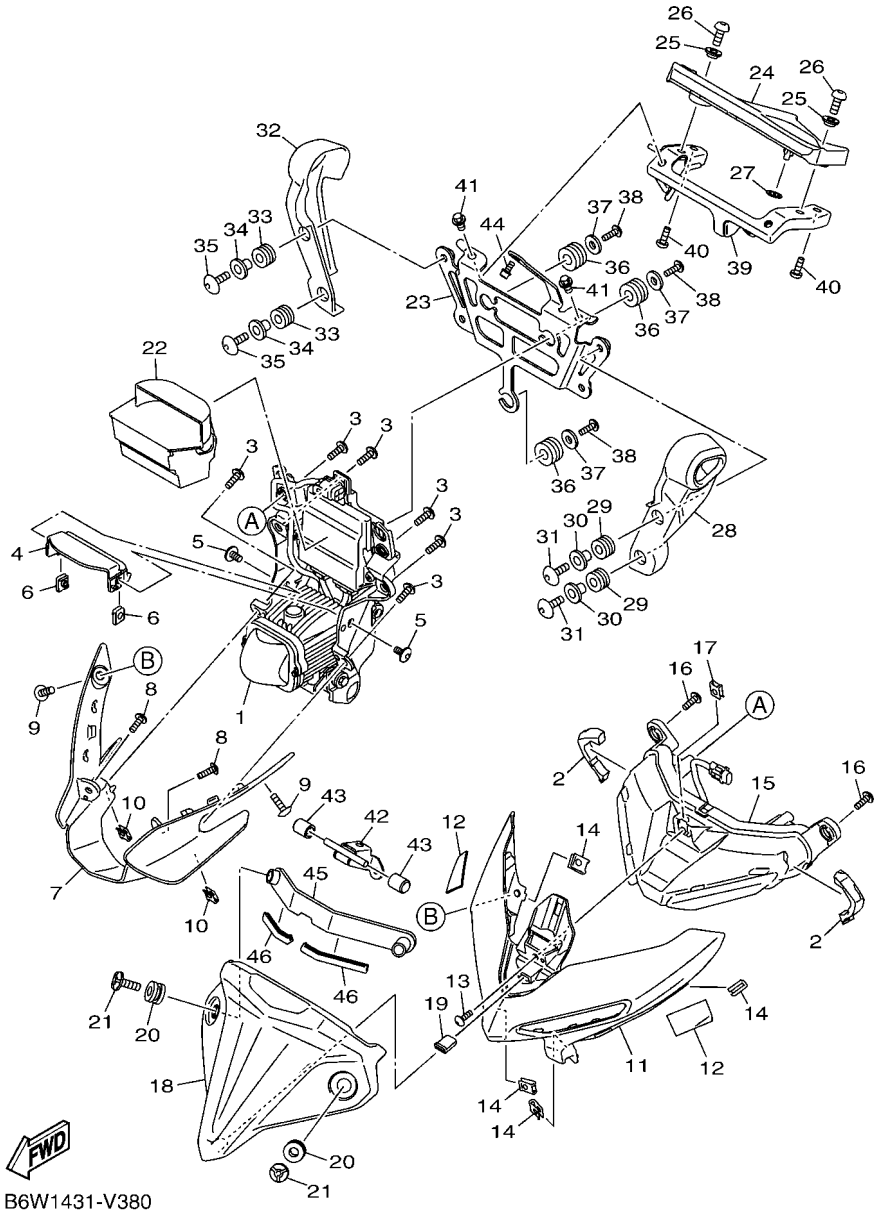

FIG. 38 HEADLIGHT

REF. NO.	PART NO.	DESCRIPTION	BDA2					REMARKS
1	B9T–H4300–00	HEADLIGHT ASSY	1					
2	90520–10834	DAMPER, PLATE	2					
3	97707–50016	SCREW, TRUSS HEAD TAPPING	6					
4	B9T–H411E–00	STAY,HEAD LIGHT INNER	1					
5	90111–05003	BOLT,HEX. SOCKET BUTTON	2					
6	90183–05076	NUT, SPRING	2					
7	B9T–H4144–00	COVER, HEADLIGHT	1					
8	97707–50016	SCREW, TRUSS HEAD TAPPING	2					
9	90160–05009	SCREW, ROUND TAPPING	2					
10	90183–05807	NUT, SPRING	2					
11	B9T–F831V–00–P2	STAY, HEAD LIGHT 1	1					UR FOR DPBMC
	B9T–F831V–00–3E	STAY, HEAD LIGHT 1	1					UR FOR PGD
12	90520–20819	DAMPER, PLATE	2					
13	90160–05009	SCREW, ROUND TAPPING	1					
14	90183–05807	NUT, SPRING	4					
15	B9T–H4410–00	POSITION LIGHT ASSY 1	1					
16	97707–50016	SCREW, TRUSS HEAD TAPPING	2					
17	90183–05807	NUT, SPRING	1					
18	B9T–H4369–00–P4	COVER 1	1					MDNM8
19	1PA–F411J–00	DAMPER, SIDE COVER	1					
20	90480–12808	GROMMET	2					
21	90111–06870	BOLT,HEX. SOCKET BUTTON	2					
22	B9T–H4196–00	COVER, SOCKET	1					
23	B9T–F8357–00	STAY 2	1					
24	B9T–F8345–00	MOLE 1	1					
25	90387–06242	COLLAR	2					
26	90111–06029	BOLT,HEX. SOCKET BUTTON	2					

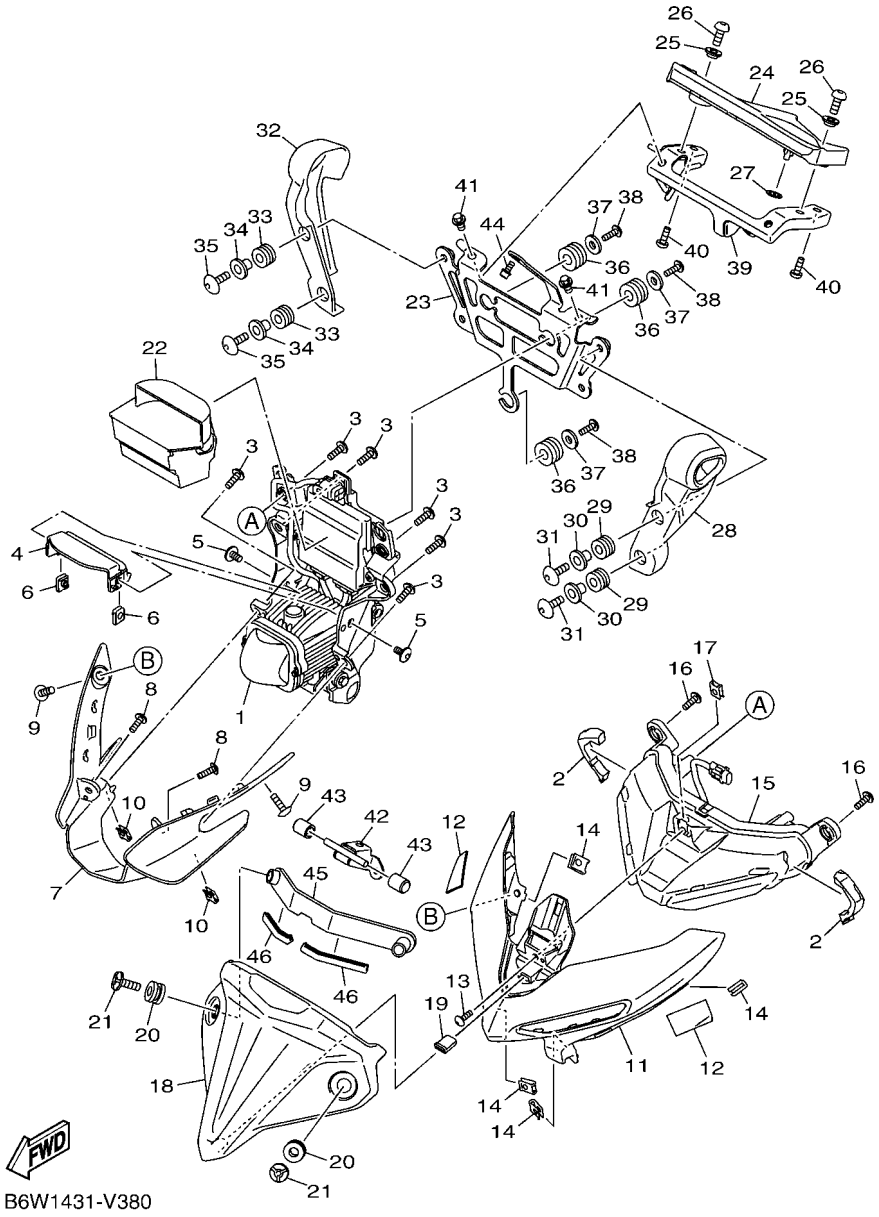

FIG. 38 HEADLIGHT

REF. NO.	PART NO.	DESCRIPTION	BDA2					REMARKS
27	90183–05M02	NUT, SPRING	1					
28	B9T–F83D3–00	COVER, FLASHER 1	1					
29	90480–12808	GROMMET	2					
30	90387–06899	COLLAR	2					
31	90111–06086	BOLT,HEX. SOCKET BUTTON	2					
32	B9T–F83D4–00	COVER, FLASHER 2	1					
33	90480–12808	GROMMET	2					
34	90387–06899	COLLAR	2					
35	90111–06086	BOLT,HEX. SOCKET BUTTON	2					
36	90480–14004	GROMMET	3					
37	90201–05036	WASHER, PLATE	3					
38	97707–50016	SCREW, TRUSS HEAD TAPPING	3					
39	B9T–F8356–00	STAY 1	1					
40	92012–06014	BOLT, BUTTON HEAD	2					
41	95022–06012	BOLT, FLANGE	2					
42	B08–F334G–00	BRACKET 1	1					
43	2SN–H4527–00	DAMPER	2					
44	90110–06865	BOLT, HEXAGON SOCKET HEAD	1					
45	B9T–H454L–00	BRACKET	1					
46	B3M–F4188–00	MOLD, FUEL TANK	2					

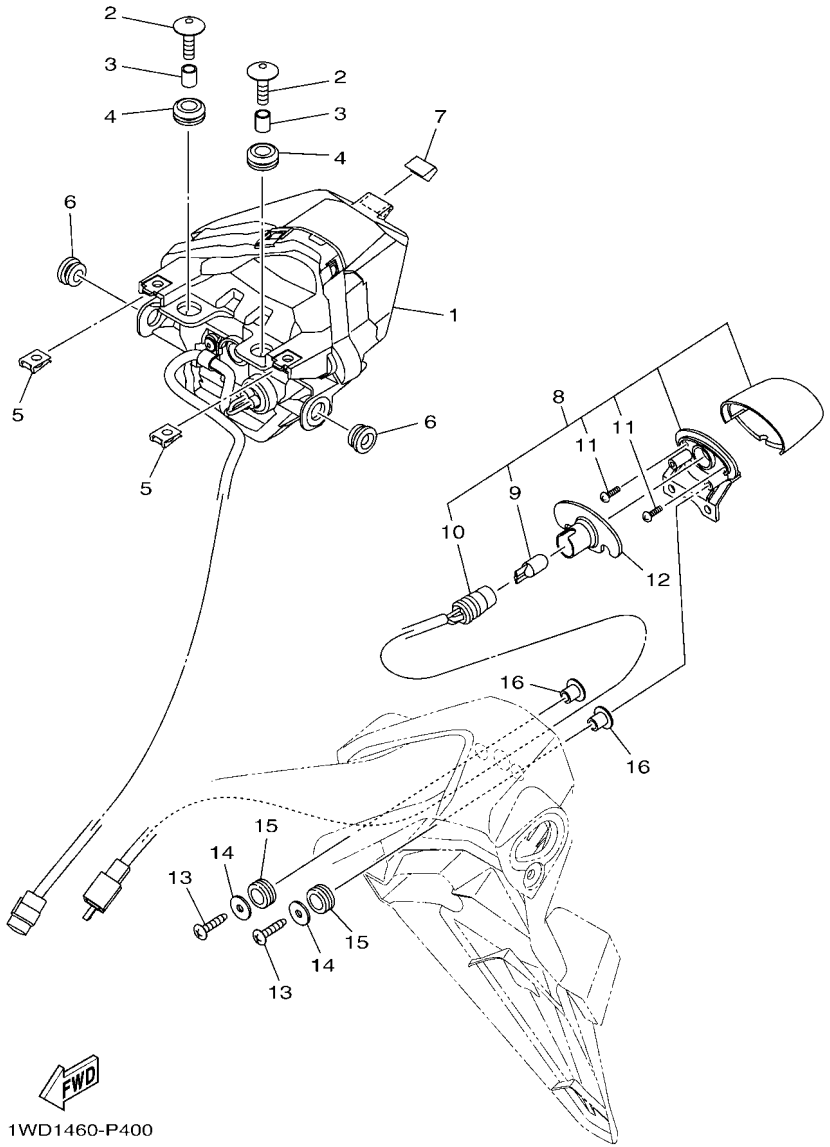

FIG. 39 TAILLIGHT

REF. NO.	PART NO.	DESCRIPTION	BDA2					REMARKS
1	1WD–H4710–02	TAILLIGHT UNIT ASSY	1					
2	90111–06117	BOLT,HEX. SOCKET BUTTON	2					
3	90387–067V1	COLLAR	2					
4	90480–13001	GROMMET	2					
5	90183–05807	NUT, SPRING	2					
6	90480–10003	GROMMET	2					
7	1WD–F1732–00	SEAL 1	1					
8	BS7–H4740–00	LICENCE LIGHT ASSY	1					
9	1WD–H4744–00	.BULB (12V-5W)	1					
10	1WD–H4547–00	.CORD, LICENCE LIGHT	1					
11	1WD–H4726–00	.SCREW	2					
12	1WD–H4753–00	DAMPER	1					
13	97707–40020	SCREW, TAPPING	2					
14	90201–04804	WASHER, PLATE	2					
15	90480–11009	GROMMET	2					
16	90387–05042	COLLAR	2					

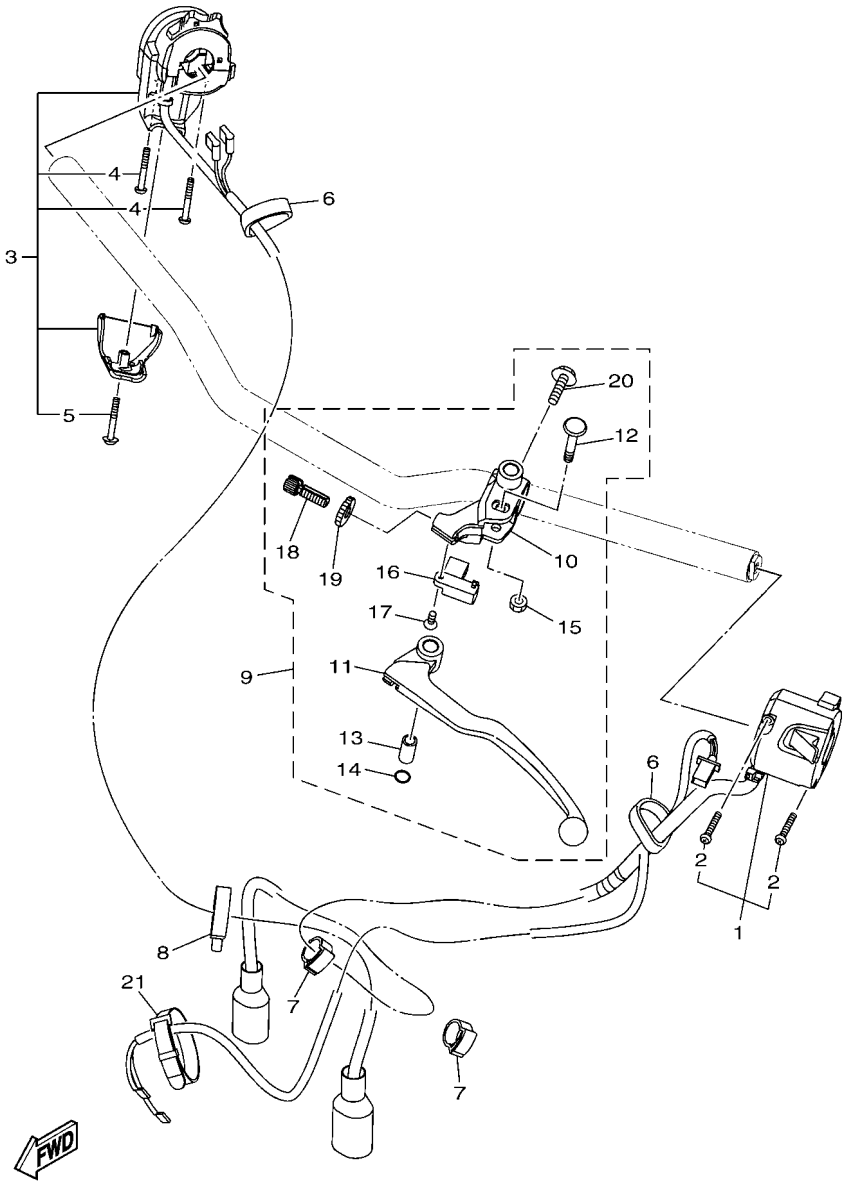

B6W1431-V400

FIG. 40 HANDLE SWITCH & LEVER

REF. NO.	PART NO.	DESCRIPTION	BDA2					REMARKS
1	B9T–H3972–00	SWITCH, HANDLE 4	1					
2	98507–04025	.SCREW, PAN HEAD	2					
3	B9T–H3975–00	SWITCH, HANDLE 2	1					
4	98507–04030	.SCREW, PAN HEAD	2					
5	97607–04230	.SCREW, WITH WASHER	1					
6	3RS–H3936–00	BAND, SWITCH CORD	2					
7	90464–16003	CLAMP	3					
8	90464–30001	CLAMP	1					
9	1WD–H2910–00	LEVER HOLDER ASSY (LEFT)	1					
10	1WD–H2911–00	.HOLDER, LEVER 1	1					
11	1WD–H3912–00	.LEVER 1	1					
12	31A–83945–00	.BOLT, LEVER	1					
13	31A–83913–00	.COLLAR, LEVER 1	1					
14	93210–108H5	.O-RING	1					
15	95602–06100	.NUT, SELF-LOCKING	1					
16	5BP–H2917–00	.SWITCH	1					
17	90151–03005	.SCREW, COUNTERSUNK	1					
18	90123–08083	.BOLT	1					
19	90179–08316	.NUT	1					
20	97507–06525	.BOLT, WITH WASHER	1					
21	3AY–H3936–00	BAND, SWITCH CORD	2					

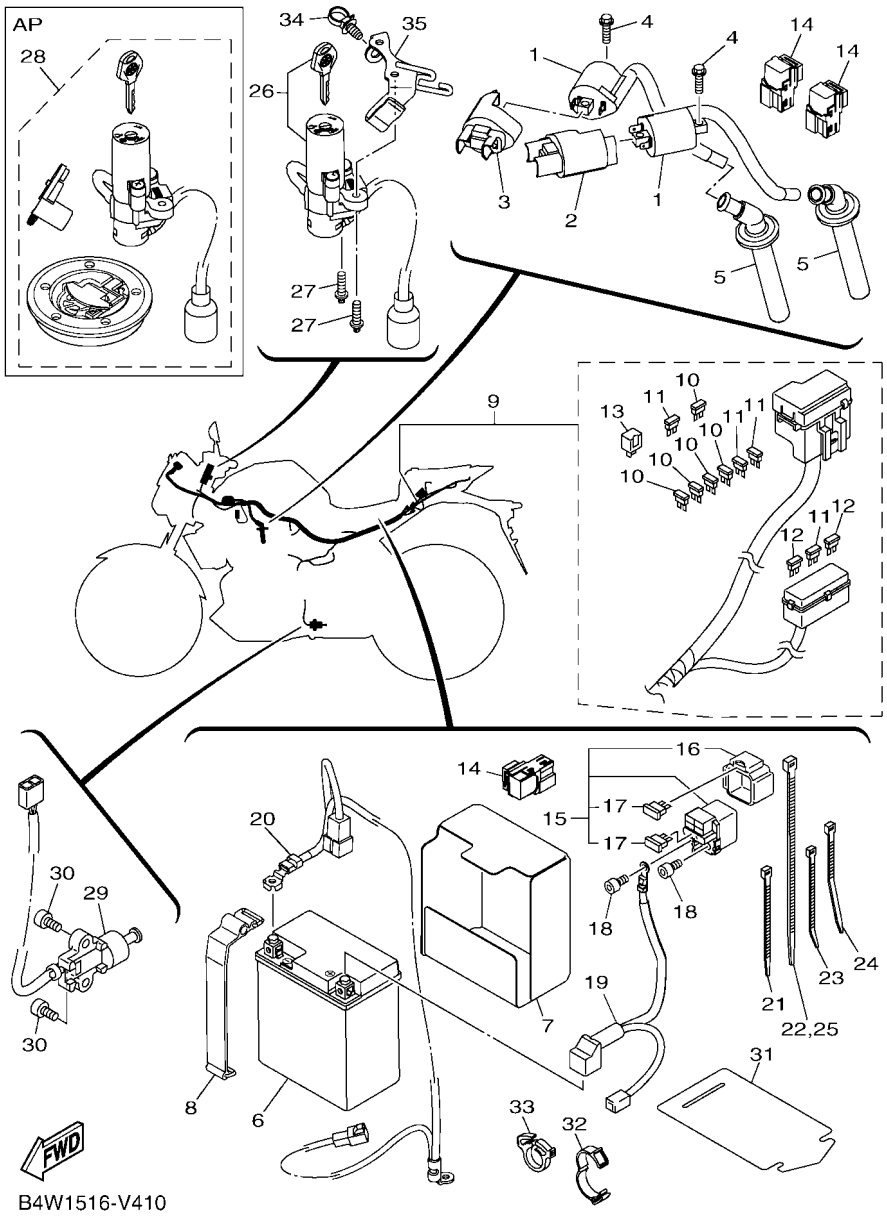

FIG. 41 ELECTRICAL 1

REF. NO.	PART NO.	DESCRIPTION	BDA2					REMARKS
1	1WD–H2310–00	IGNITION COIL ASSY	2					
2	B9T–H2314–00	COVER, IGNITION COIL	1					
3	B9T–H2314–10	COVER, IGNITION COIL	1					
4	95022–06020	BOLT, FLANGE	2					
5	BR5–H2370–00	PLUG CAP ASSY	2					
6	2YD–H2100–00	BATTERY ASSY (GS GTZ8V)	1					
7	1WD–H2121–00	PAD, BATTERY	1					
8	1WD–H2131–00	BAND, BATTERY	1					
9	B6W–H2590–00	WIRE HARNESS ASSY	1					
10	1WD–H2151–20	.FUSE (7.5A BL)	5					
11	1WD–H2151–10	.FUSE (15A-BL)	4					
12	1WD–H2151–30	.FUSE (30A)	2					
13	4B4–H1980–00	.DIODE ASSY	1					
14	1WD–H1950–00	RELAY ASSY	3					
15	1WD–H1940–00	STARTER RELAY ASSY	1					
16	1WD–H2155–00	.BAND	1					
17	1WD–H2151–01	.FUSE (30A)	2					
18	91312–05008	BOLT, HEXAGON SOCKET HEAD	2					
19	2WD–H2115–00	WIRE, PLUS LEAD	1					
20	B6W–H2116–00	WIRE, MINUS LEAD	1					
21	90464–36800	CLAMP	2					
22	90464–70800	CLAMP	7					
23	90464–22800	CLAMP	1					
24	90464–36005	CLAMP	4					
25	90464–70800	CLAMP	1					
26	B9T–H2501–00	MAIN SWITCH STEERING LOCK	1					
27	90109–060G4	BOLT	2					

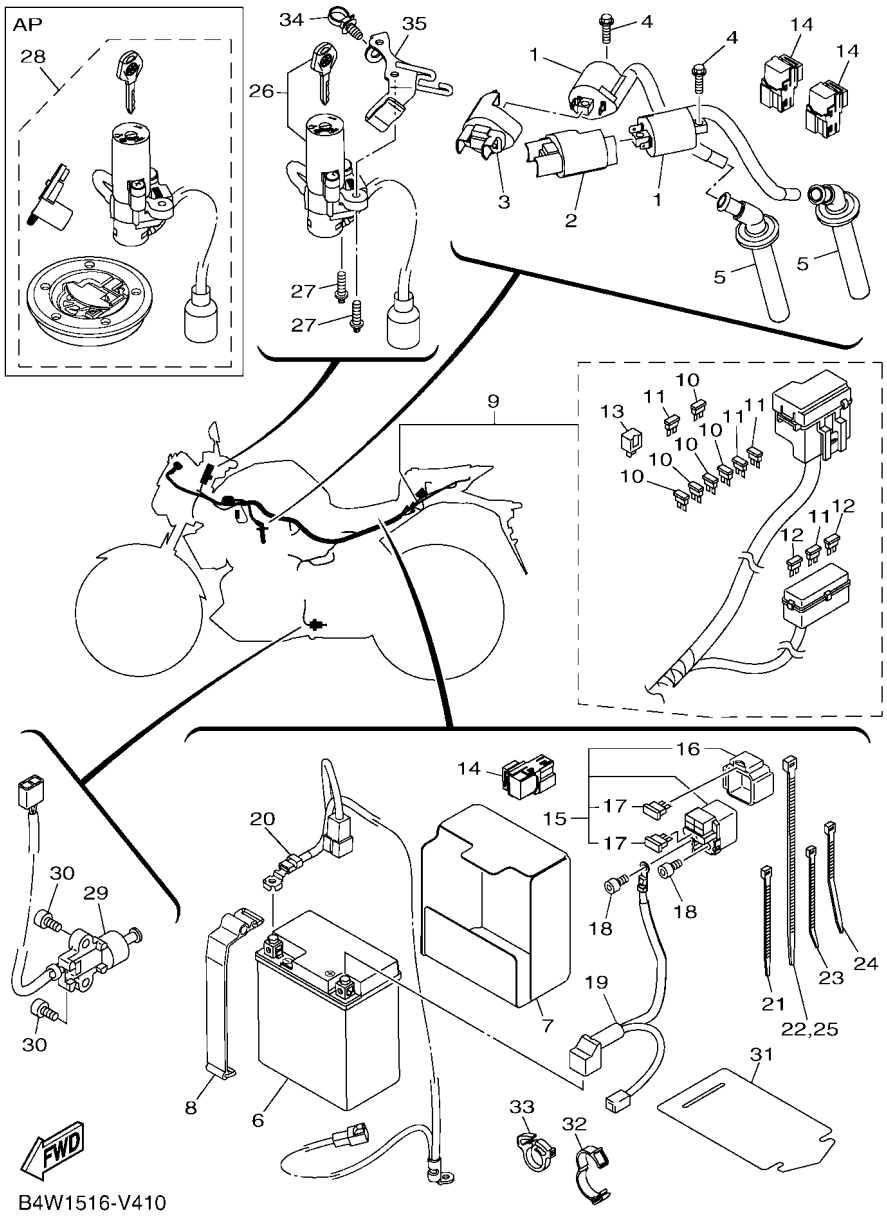

FIG. 41 ELECTRICAL 1

REF. NO.	PART NO.	DESCRIPTION	BDA2					REMARKS
28	B9T–XH250–00	MAIN SW. STRG. LOCK SUB ASSY	1					AP
29	1WD–H2566–01	SWITCH, SIDE STAND	1					
30	90110–05809	BOLT, HEXAGON SOCKET HEAD	2					
31	1WD–H2591–00	BAND	1					
32	90464–26001	CLAMP	1					
33	90464–08009	CLAMP	1					
34	90464–30009	CLAMP	1					
35	B9T–F8358–00	STAY 3	1					

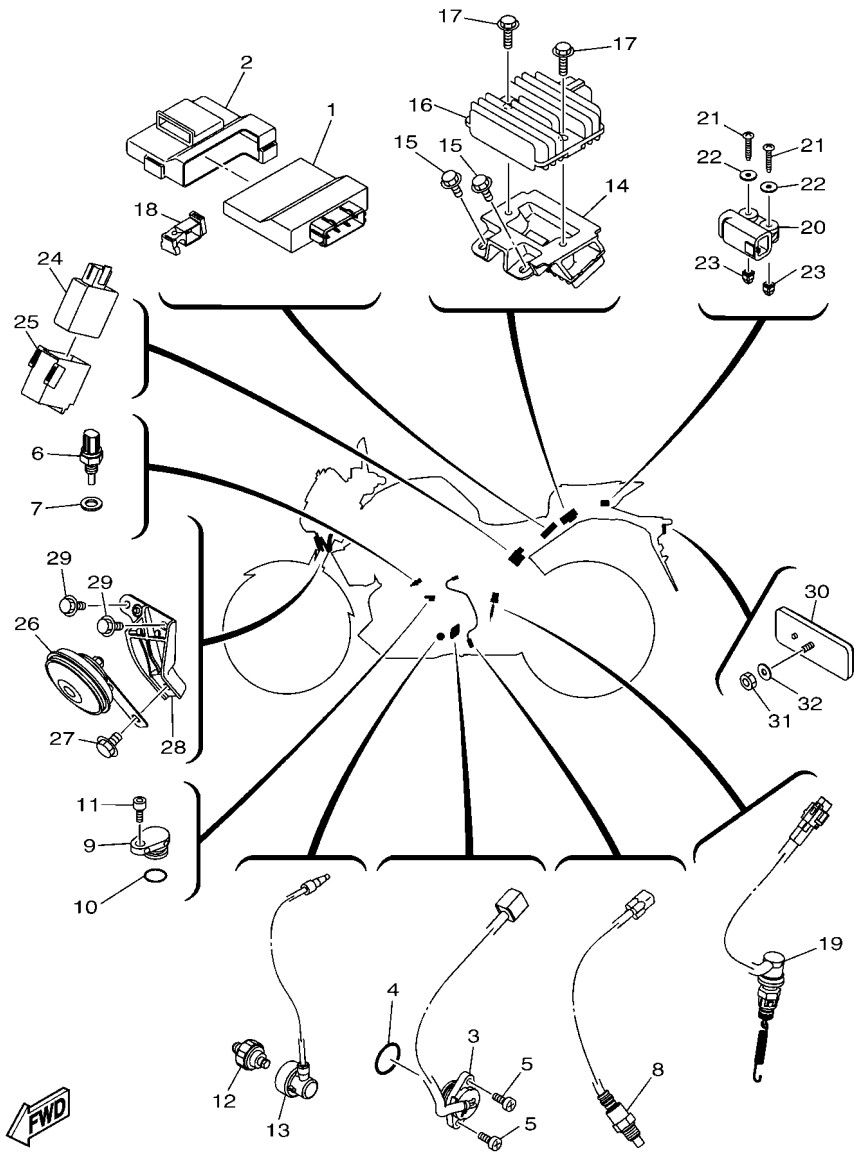

B6W1431-V420

FIG. 42 ELECTRICAL 2

REF. NO.	PART NO.	DESCRIPTION	BDA2					REMARKS
1	BS8–H591A–00	ENGINE CONTROL UNIT ASSY	1					
2	B6W–H5546–00	BAND	1					
3	1WD–H2540–00	NEUTRAL SWITCH ASSY	1					
4	93210–21801	O-RING	1					
5	98502–05016	SCREW,PAN HEAD	2					
6	54P–H3591–00	THERMO UNIT	1					
7	90430–10804	GASKET	1					
8	1WD–H592A–00	SENSOR, OXYGEN	1					
9	2WD–E5189–00	PLUG	1					
10	93210–15566	O-RING	1					
11	91332–06016	BOLT	1					
12	1WS–82504–00	OIL PRESSURE SWITCH ASSY	1					
13	1WD–H1315–01	LEAD WIRE ASSY	1					
14	BR5–H1961–00	COVER	1					
15	95D02–06016	BOLT, FLANGE DEEP RECESS	2					
16	1WD–H1960–00	RECTIFIER & REGULATOR ASSY	1					
17	95D02–06025	BOLT, FLANGE DEEP RECESS	2					
18	BR5–H2592–00	BAND	1					
19	1WD–H2530–10	STOP SWITCH ASSY	1					
20	1WD–H2576–00	SENSOR, LEAN ANGLE	1					
21	90160–04009	SCREW, ROUND TAPPING	2					
22	90201–04028	WASHER, PLATE	2					
23	4B4–84334–00	NUT, ADJUSTING	2					
24	B9T–83400–00	FLASHER CONT. UNIT ASSY	1					
25	B9T–H3836–00	BAND	1					
26	B9T–H3371–00	HORN	1					
27	95D07–08012	BOLT, FLANGE DEEP RECESS	1					

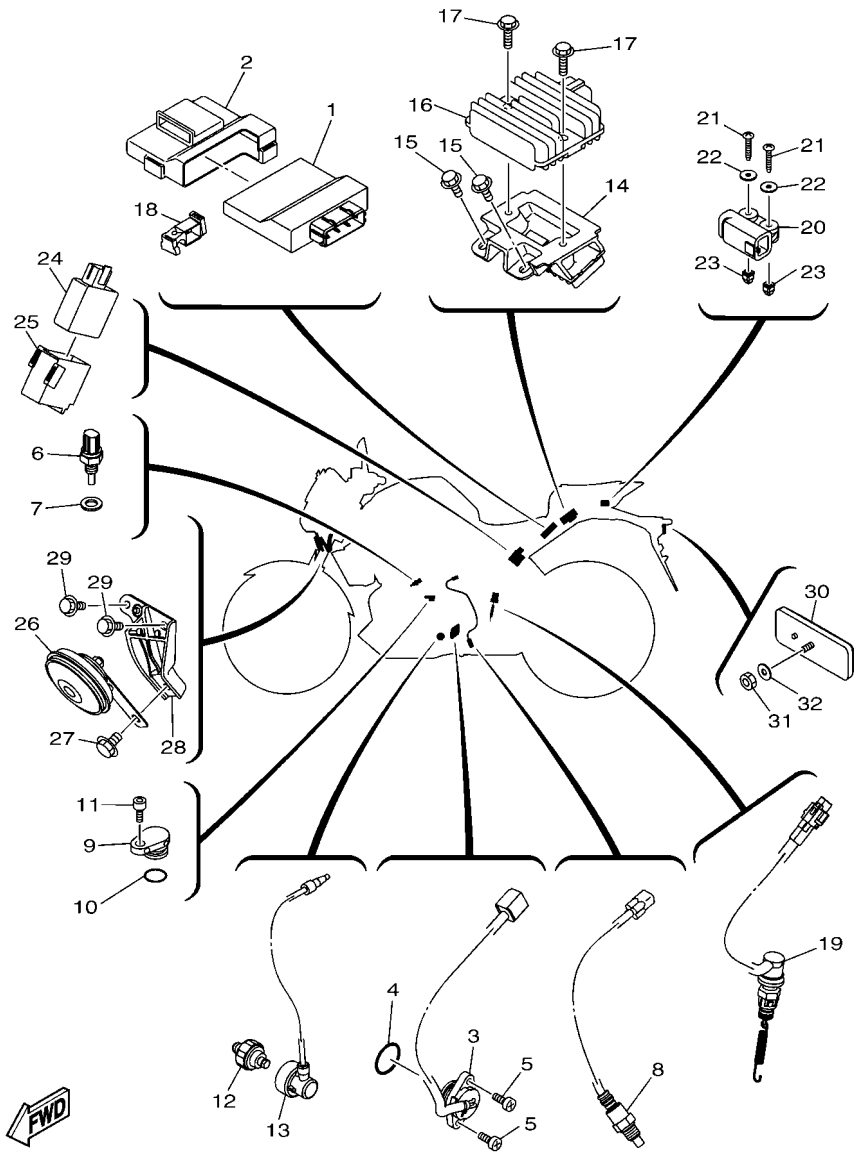

B6W1431-V420

FIG. 42 ELECTRICAL 2

REF. NO.	PART NO.	DESCRIPTION	BDA2					REMARKS
28	1WD–H3378–00	STAY, HORN	1					
29	95D07–06016	BOLT, FLANGE DEEP RECESS	2					
30	3C1–H5130–00	REAR REFLECTOR ASSY	1					
31	95602–05100	NUT, U	1					
32	90201–05043	WASHER, PLATE	1					

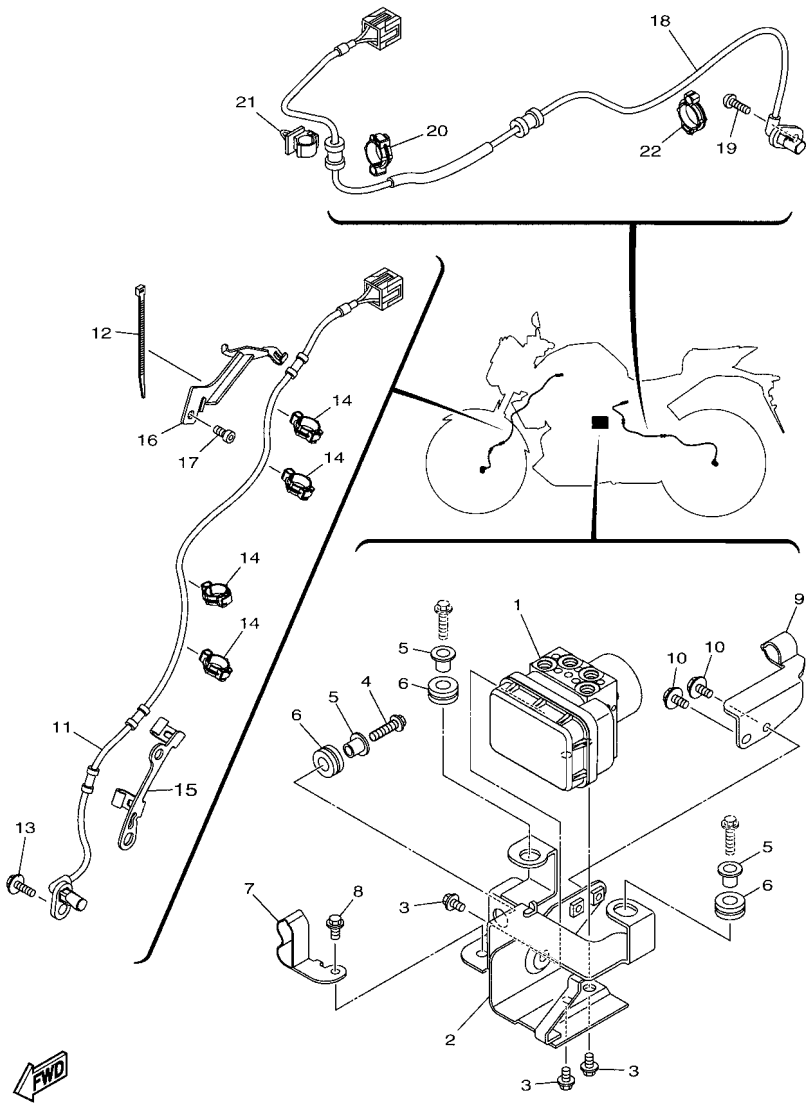

B5W2110-V430

FIG. 43 ELECTRICAL 3

REF. NO.	PART NO.	DESCRIPTION	BDA2					REMARKS
1	2WD–H5930–07	HYDRAULIC UNIT ASSY	1					UR Either can use
	2WD–85930–07	HYDRAULIC UNIT ASSY	1					UR Either can use
2	2WD–F175T–00	BRACKET 1	1					
3	95022–06010	BOLT, FLANGE	3					
4	95022–06025	BOLT, FLANGE	1					
5	90387–06M60	COLLAR	3					
6	90480–14229	GROMMET	3					
7	2WD–F5886–00	HOLDER, BRAKE HOSE	1					
8	95027–06012	BOLT, FLANGE	1					
9	2WD–F5875–00	HOLDER, BRAKE HOSE 1	1					
10	95027–06012	BOLT, FLANGE	2					
11	2WD–85970–01	WHEEL SENSOR ASSY, FRONT	1					
12	90464–22800	CLAMP	1					
13	95027–06016	BOLT, FLANGE	1					
14	90464–12013	CLAMP	4					
15	B5L–F3318–00	WIRE, HOLDER 1	1					
16	B6W–F3319–00	WIRE, HOLDER 2	1					
17	91317–06012	BOLT,HEX.SOCKET HEAD	1					
18	2WD–85980–01	WHEEL SENSOR ASSY, REAR	1					
19	92012–06016	BOLT, BUTTON HEAD	1					
20	90464–14803	CLAMP	1					
21	90464–10800	CLAMP	1					
22	90464–14803	CLAMP	1					

PART NO.	REF. NO.
1WD–11411–00	2 – 1
1WD–11413–00	2 – 23
1WD–11413–10	2 – 23
1WD–11413–20	2 – 23
1WD–11413–30	2 – 23
1WD–11413–40	2 – 23
1WD–11416–00	2 – 10
1WD–11416–10	2 – 10
1WD–11416–20	2 – 10
1WD–11416–30	2 – 10
1WD–11416–40	2 – 10
1WD–11650–00	2 – 2
5SL–11654–00	2 – 3
1WD–11656–00	2 – 5
1WD–11656–10	2 – 5
1WD–11656–20	2 – 5
1WD–11656–30	2 – 5
1WD–12113–00	3 – 4
1HX–12168–F0	3 – 9
1HX–12168–H1	3 – 9
1HX–12168–K1	3 – 9
1HX–12168–M1	3 – 9
1HX–12168–R1	3 – 9
1HX–12168–U1	3 – 9
1HX–12168–W1	3 – 9
1HX–12168–Y1	3 – 9
1HX–12169–11	3 – 9
1HX–12169–31	3 – 9
1HX–12169–50	3 – 9
1HX–12169–70	3 – 9
1HX–12169–90	3 – 9
1HX–12169–E0	3 – 9
1HX–12169–G0	3 – 9
1HX–12169–J0	3 – 9
1HX–12169–L0	3 – 9
1HX–12169–N0	3 – 9
1HX–12169–T0	3 – 9
1WD–12210–01	4 – 6
5P0–12411–00	6 – 1
5NL–12564–00	1 – 27
8GL–13571–00	8 – 15
5JW–14104–00	8 – 20
8A7–14139–00	8 – 19
5PS–14147–00	8 – 7
895–14169–00	8 – 18
1WS–14335–00	8 – 17
8HG–14534–00	8 – 16
5VY–1482K–00	1 – 19

PART NO.	REF. NO.
2H7–15361–00	5 – 17
1WD–16382–00	13 – 19
1WD–17424–00	14 – 28
278–17425–00	14 – 12
	14 – 29
26P–21568–11	24 – 36
1WD–22141–00	20 – 2
3AH–22222–00	22 – 5
31A–23125–31	22 – 12
	22 – 25
31A–23149–31	22 – 11
	22 – 24
3R4–23153–00	22 – 9
	22 – 22
4V4–23188–L0	22 – 18
	22 – 36
3FV–23462–00	22 – 39
3C1–24512–00	23 – 23
1WD–25181–00	26 – 11
1WD–25381–00	28 – 21
5MT–25398–00	26 – 7
	28 – 18
5MT–25398–10	26 – 7
	28 – 18
5MT–25398–20	26 – 7
	28 – 18
1WD–25802–00	27 – 4
1WD–25802–50	29 – 4
1WD–25803–00	27 – 5
1WD–25803–50	29 – 5
1WD–25805–00	27 – 12
1WD–25806–00	29 – 15
5RB–25854–00	31 – 3
36Y–2589H–00	31 – 5
5KN–25926–01	29 – 17
34X–25937–00	29 – 7
4SS–27218–00	33 – 3
3KW–27234–00	33 – 8
4BP–27261–00	32 – 25
1WS–82504–00	42 – 12
B9T–83400–00	42 – 24
31A–83913–00	40 – 13
31A–83945–00	40 – 12
4B4–84334–00	42 – 23
1WS–85801–00	8 – 11
2WD–85930–07	43 – 1
2WD–85970–01	43 – 11
2WD–85980–01	43 – 18

PART NO.	REF. NO.
BS8–E1102–10	1 – 1
1WD–E111G–00	1 – 15
	1 – 24
1WD–E1133–10	1 – 2
BS8–E1181–00	1 – 12
1WD–E1191–00	1 – 16
1WD–E1193–00	1 – 18
4YS–E1198–00	7 – 15
1WD–E1311–10	1 – 25
B1X–E1351–00	1 – 26
1WD–E1361–00	1 – 8
1WD–E1411–00	2 – 1
1WD–E1454–00	2 – 22
1WD–E1496–00	2 – 18
1WD–E1531–00	2 – 15
1WD–E1536–00	2 – 6
1WD–E1549–00	2 – 7
BS8–E1603–00	2 – 12
BS8–E1631–00	2 – 11
1WD–E1633–00	2 – 13
1WD–E2111–00	3 – 1
1WD–E2117–00	3 – 5
3S0–E2118–00	3 – 6
1PA–E2119–00	3 – 8
BS8–E2119–00	3 – 7
1WD–E2121–00	3 – 2
1WD–E2126–00	3 – 3
1WD–E2153–11	3 – 10
BS8–E2170–00	4 – 1
1WD–E2176–00	4 – 3
BS8–E2180–00	4 – 2
1WD–E2213–00	4 – 9
33S–E2223–00	5 – 7
1WD–E2241–00	1 – 17
1WD–E2251–00	4 – 11
1WD–E2252–00	4 – 12
1WD–E2256–00	4 – 14
1WD–E2405–00	6 – 9
1WD–E2413–00	6 – 2
1WD–E2422–00	5 – 13
1WD–E2428–00	5 – 14
1WD–E2450–00	5 – 5
1WD–E2453–00	5 – 6
33S–E2456–00	5 – 8
B04–E2460–11	6 – 8
B04–E2461–00	6 – 12
B04–E2462–10	6 – 13
1WD–E2577–00	6 – 4

PART NO.	REF. NO.
1WD–E2578–00	6 – 5
1WD–E2671–00	6 – 10
5YP–E2675–00	6 – 11
1WD–E2681–00	5 – 11
1WD–E319L–00	5 – 9
1WD–E3300–01	7 – 1
1WD–E3341–00	7 – 3
1WD–E3342–00	7 – 4
1WD–E3410–00	7 – 9
1WD–E3414–00	7 – 16
1WD–E3415–00	7 – 10
1WD–E3417–00	7 – 13
1WD–E3440–10	7 – 11
54P–E3474–00	8 – 39
BR5–E3543–00	8 – 41
1WD–E3556–00	8 – 8
1WD–E3573–00	8 – 14
1WD–E3586–00	8 – 1
BS8–E3750–02	8 – 5
1WD–E3761–00	8 – 6
BS7–E3907–01	23 – 19
3C1–E3915–00	23 – 20
1WD–E3938–00	8 – 13
1WD–E3971–02	23 – 27
54P–E416A–00	8 – 12
1WD–E4243–00	8 – 10
BR5–E4411–00	8 – 25
BS8–E4412–00	8 – 29
1WD–E4422–00	8 – 33
BR5–E4437–00	8 – 28
52B–E443E–00	8 – 37
40D–E443G–00	28 – 30
1WD–E4451–00	8 – 36
1WD–E4452–00	8 – 30
1WD–E4457–00	8 – 31
1WD–E4462–00	8 – 34
2MS–E4465–00	8 – 21
2MS–E4466–00	8 – 22
1WD–E4469–00	8 – 26
1WD–E446C–00	8 – 27
B04–E449E–00	24 – 64
BS8–E4602–00	9 – 1
1WD–E4613–00	9 – 19
1WD–E4628–00	9 – 23
BR5–E4710–00	9 – 4
54D–E4714–00	9 – 13
1WD–E4715–00	9 – 14
1WD–E4728–00	9 – 8

PART NO.	REF. NO.
1WD–E473L–00	9 – 2
5TP–E4747–00	17 – 27
	32 – 48
1WD–E4758–00	9 – 5
1WD–E4763–00	9 – 12
1WD–E4840–00	1 – 30
1WD–E4881–00	1 – 31
1WD–E4882–01	1 – 33
1WD–E4890–00	1 – 20
1WD–E4899–00	1 – 21
1WD–E5148–00	10 – 4
1WD–E5150–20	10 – 1
1WD–E5155–00	10 – 13
2WD–E5189–00	42 – 9
1WD–E5362–00	5 – 18
2MS–E5373–01	8 – 44
BS7–E5377–00	11 – 21
1WD–E5411–00	11 – 1
1WD–E5413–10	11 – 16
1WD–E5418–00	11 – 22
1WD–E5421–00	5 – 1
1WD–E5441–00	11 – 14
1WD–E5451–00	11 – 7
1WD–E5461–00	11 – 10
1WD–E5462–00	11 – 17
1WD–E5514–00	12 – 1
1WD–E5515–10	12 – 3
44D–E5521–00	12 – 2
1WD–E5580–00	12 – 4
1WD–E6111–00	13 – 1
1WD–E6150–00	13 – 2
1WD–E6154–00	13 – 3
1WD–E6181–00	13 – 13
1WD–E6324–00	13 – 6
1WD–E6331–00	13 – 5
1WD–E6333–10	13 – 8
1WD–E6337–00	13 – 9
1WD–E6340–00	13 – 15
1WD–E6350–01	13 – 7
1WD–E6356–00	13 – 14
1WD–E6371–00	13 – 4
1WD–E7121–00	14 – 7
1WD–E7131–00	14 – 5
1WD–E7151–00	14 – 2
1WD–E7161–00	14 – 6
1WD–E7211–00	14 – 23
1WD–E7221–00	14 – 14
1WD–E7231–00	14 – 18

PART NO.	REF. NO.
1WD–E7241–00	14 – 19
1WD–E7251–00	14 – 22
1WD–E7261–00	14 – 17
1WD–E7402–00	14 – 13
1WD–E7411–00	14 – 1
1WD–E7460–00	14 – 31
1WD–E8101–00	16 – 4
1WD–E8110–00	16 – 11
1WD–E8111–00	16 – 12
1WD–E8112–00	16 – 17
1EG–E8113–01	16 – 13
1WD–E8115–00	16 – 14
1WD–E8127–10	16 – 2
1WD–E8140–00	16 – 8
1WD–E8175–00	16 – 3
1WD–E8337–00	16 – 1
1WD–E8511–00	15 – 4
1WD–E8512–00	15 – 5
1WD–E8513–00	15 – 6
1WD–E8531–00	15 – 7
1WD–E8536–00	15 – 9
1WD–E8540–10	15 – 1
5TP–E8542–00	15 – 2
1WD–E8562–00	15 – 10
B04–F1110–00–P1	17 – 1
B5L–F113J–00	18 – 10
B5L–F113K–01	18 – 11
2MS–F115R–00	23 – 45
1WD–F1171–00	17 – 15
1WD–F117K–00	25 – 12
1WD–F122A–00	17 – 21
B04–F122B–00	17 – 22
2MS–F134X–00	23 – 46
1WD–F135F–00	17 – 12
B9T–F137K–00	24 – 49
B9T–F137L–00	24 – 59
B9T–F137U–00	6 – 19
B9T–F137V–00	6 – 20
1WD–F144G–00	32 – 28
B04–F1533–00	24 – 68
5BP–F153E–D0	18 – 6
5BP–F153E–E0	18 – 6
B9T–F1557–00	6 – 21
BR5–F1611–01	18 – 14
1WD–F1617–00	18 – 22
1WD–F1621–00	18 – 32
1WD–F1629–01	18 – 21
1WD–F163A–00	18 – 34

PART NO.	REF. NO.
BR5–F163E–00	18 – 19
B04–F1642–00	24 – 67
1WD–F1652–00	17 – 2
B17–F1668–00	20 – 17
1WD–F1669–00	18 – 15
1WD–F1688–00	18 – 27
1WD–F1689–00	18 – 28
1WD–F16A2–00	18 – 18
B9T–F1716–00	19 – 45
B9T–F171E–00–3E	19 – 41
B9T–F171E–00–P0	19 – 41
1WD–F171L–00	19 – 19
1WD–F171M–00	19 – 22
1WD–F171N–00	19 – 25
B9T–F171X–00–3E	19 – 43
B9T–F171X–00–P0	19 – 43
B9T–F1726–00	19 – 48
BS7–F172W–00	19 – 34
1WD–F1731–00–PA	19 – 39
1WD–F1732–00	39 – 7
B9T–F173E–30	19 – 2
B9T–F173E–40	19 – 2
B9T–F173F–30	19 – 11
B9T–F173F–40	19 – 11
2WD–F175T–00	43 – 2
B9T–F175T–00	6 – 22
B9T–F175U–00	6 – 23
45P–F1778–00	6 – 30
1WD–F1816–01	19 – 31
1WD–F1817–00	19 – 32
3C1–F1828–00	19 – 30
1WD–F1871–01	19 – 27
1WD–F1875–00	19 – 29
1WD–F191B–00	17 – 6
1WD–F193A–00	17 – 3
1WD–F2110–00	20 – 1
1WD–F2129–01	20 – 3
1WD–F2151–00	20 – 7
1WD–F2174–00	28 – 27
1WD–F2184–00	20 – 4
BS7–F2210–20	20 – 14
1WD–F2311–01	20 – 11
1WD–F248B–00	20 – 9
B9T–F3100–10	22 – 1
B9T–F3102–00	22 – 19
B9T–F3103–10	22 – 2
BS7–F3110–00	22 – 20
BS7–F3111–00	22 – 17

PART NO.	REF. NO.
BS7–F3111–00	22 – 35
BK6–F3117–00	22 – 32
BS7–F3118–00	22 – 33
B9T–F3120–10	22 – 3
B9T–F3126–00	22 – 14
	22 – 27
B9T–F3141–00	22 – 6
	22 – 31
B48–F3144–00	22 – 8
	22 – 21
BK6–F3145–00	22 – 10
	22 – 23
2BU–F3158–00	22 – 29
B9T–F3170–00	22 – 28
BK6–F3171–00	22 – 13
	22 – 26
31B–F3181–00	22 – 30
BK6–F319U–00	22 – 7
BK6–F330G–00	22 – 4
B5L–F3318–00	43 – 15
B6W–F3319–00	43 – 16
BK6–F332K–00	22 – 15
BS7–F3340–00	22 – 38
B08–F334G–00	38 – 42
BS7–F334M–00	22 – 37
BK6–F3357–00	22 – 34
BK6–F3393–00	22 – 16
5BP–F3416–10	21 – 2
5BP–F3418–00	21 – 5
B9T–F3435–00	21 – 6
B04–F3441–00–P2	21 – 10
B9T–F3442–00	21 – 13
BS7–F4110–00	23 – 1
1PA–F411J–00	38 – 19
B9T–F4129–00–3E	24 – 8
B9T–F4129–00–P0	24 – 8
B9T–F412Y–00	23 – 5
B9T–F4139–00–3E	24 – 24
B9T–F4139–00–P0	24 – 24
1WD–F413B–00	24 – 52
	24 – 62
5D9–F414G–00	17 – 4
B04–F414G–00	17 – 14
2MS–F4170–00	23 – 43
1DW–F4180–02	23 – 35
B3M–F4188–00	38 – 46
BS7–F4188–00	23 – 2
BS7–F4191–01	23 – 10

PART NO.	REF. NO.
2MS–F419F–00	23 – 38
B04–F4254–A0	24 – 5
B04–F4254–B0	24 – 5
1WD–F4312–00	23 – 28
B9T–F4314–00	23 – 29
2MS–F4314–01	23 – 33
2MS–F4315–00	23 – 41
2MS–F4316–00	23 – 49
1WD–F4376–00	23 – 31
3C1–F4486–00	23 – 25
BS7–F4491–00	23 – 24
3C1–F4519–00	23 – 22
1WD–F4710–02	25 – 1
1WD–F4711–01	25 – 2
3C1–F4741–00	25 – 6
5BP–F4741–00	25 – 3
1WD–F4750–01	25 – 5
1WD–F4780–00	25 – 7
1WD–F478E–00	25 – 10
1WD–F4792–00	25 – 8
2MS–F483H–00	23 – 44
1WD–F510C–01	26 – 2
2WD–F5168–03–P0	26 – 1
2WD–F5168–03–P1	26 – 1
2DP–F517G–00	26 – 8
	28 – 19
2WD–F5338–03–P0	28 – 1
2WD–F5338–03–P1	28 – 1
1WD–F5364–00	28 – 5
1WD–F5366–00–P1	28 – 6
1WD–F5366–00–P3	28 – 6
1WD–F5377–00	28 – 9
1WD–F537W–00	28 – 11
1WD–F537X–00	28 – 12
1WD–F5383–00	28 – 23
1PA–F5386–00	26 – 10
1WD–F5386–00	28 – 22
1WD–F5388–00	28 – 26
1WD–F539F–00	28 – 13
1WD–F5443–00	28 – 10
1WD–F5807–00	31 – 2
1WD–F5808–00	33 – 2
1WD–F580E–00	33 – 1
1WD–F580U–01	27 – 3
2WD–F580W–00	29 – 3
B6W–F581J–00	31 – 21
2WD–F581K–00	33 – 22
1WD–F581U–01	27 – 1

PART NO.	REF. NO.
50C–F582A–50	33 – 5
B04–F582E–00	33 – 21
2WD–F582J–00	33 – 25
1WD–F582W–00	29 – 1
5TL–F5838–00	29 – 18
1WD–F5852–00	31 – 4
1WD–F5852–50	33 – 12
2VN–F5854–00	33 – 10
3C1–F5855–00	31 – 7
50C–F5855–00	33 – 11
50C–F5866–00	33 – 6
3RW–F5867–00	31 – 6
1WD–F5870–00	31 – 1
B6W–F5872–00	31 – 17
2WD–F5873–00	31 – 24
B5L–F5874–00	31 – 27
2WD–F5875–00	43 – 9
B5L–F587A–00	31 – 35
2WD–F5886–00	43 – 7
2WD–F5887–00	33 – 28
B6W–F5887–00	31 – 34
2WD–F588F–00	31 – 15
2WD–F588G–00	31 – 30
50C–F5894–10	33 – 9
1WD–F5895–50	33 – 13
50C–F589A–00	33 – 15
1WD–F5914–50	29 – 16
5YP–F5917–00	27 – 8
	29 – 6
1WD–F5919–00	27 – 10
1WD–F5919–50	29 – 9
2WD–F5921–50	29 – 12
5YP–F5924–00	27 – 11
1WD–F5924–50	29 – 10
5YP–F5925–01	27 – 9
	29 – 11
5YP–F5937–00	27 – 7
1WD–F5939–51	29 – 13
1WD–F5939–61	29 – 14
B9T–F6111–00	30 – 1
2DP–F6240–00	30 – 3
2DP–F6241–00	30 – 2
1WD–F6246–00	30 – 4
B9T–F6280–00	30 – 11
B9T–F6290–00	30 – 12
B6W–F6301–00	30 – 7
B9T–F6315–00	30 – 9
B9T–F6335–00	30 – 6

PART NO.	REF. NO.
1WD–F7211–00	32 – 24
50C–F7222–00	33 – 4
BS8–F7261–00	16 – 18
1WD–F7311–00	32 – 1
B04–F7321–00	32 – 2
1WD–F7430–01	32 – 32
1WD–F7431–01	32 – 33
1WD–F7435–00	32 – 11
	32 – 20
1WD–F7437–00	32 – 36
	32 – 44
1WD–F7440–01	32 – 40
1WD–F7441–01	32 – 41
1WD–F7442–01	32 – 9
1WD–F7443–00	32 – 18
1WD–F7445–00	32 – 15
1WD–F7446–00	32 – 31
1WD–F7451–00	32 – 10
1WD–F7461–00	32 – 19
B9T–F8100–00	25 – 15
31B–F8307–00	19 – 7
	19 – 16
B9T–F831V–00–3E	38 – 11
B9T–F831V–00–P2	38 – 11
B04–F833E–00	19 – 63
B04–F833F–00	19 – 52
B04–F833G–00	19 – 53
B9T–F8345–00	38 – 24
B9T–F8356–00	38 – 39
B9T–F8357–00	38 – 23
B9T–F8358–00	41 – 35
1PA–F836B–01	19 – 64
B9T–F836K–00	24 – 45
B9T–F836L–00	24 – 55
B9T–F837N–00	24 – 53
B9T–F837R–00	24 – 63
B6W–F8385–00–P1	19 – 51
B9T–F838N–00	24 – 19
B9T–F838R–00	24 – 39
B9T–F8391–30	24 – 51
B9T–F8391–40	24 – 51
B9T–F8392–30	24 – 61
B9T–F8392–40	24 – 61
B9T–F83D3–00	38 – 28
B9T–F83D4–00	38 – 32
B08–F842M–00	19 – 61
1WD–H1315–01	42 – 13
BS7–H1410–00	34 – 2

PART NO.	REF. NO.
BR5–H1450–00	34 – 1
1WD–H1800–00	35 – 1
1WD–H1801–00	35 – 2
1WD–H1828–00	35 – 4
4FP–H182L–00	35 – 6
1WD–H183G–00	35 – 5
1WD–H1861–00	35 – 3
1WD–H1940–00	41 – 15
1WD–H1950–00	41 – 14
1WD–H1960–00	42 – 16
BR5–H1961–00	42 – 14
4B4–H1980–00	41 – 13
2YD–H2100–00	41 – 6
2WD–H2115–00	41 – 19
B6W–H2116–00	41 – 20
1WD–H2121–00	41 – 7
5D9–H2126–00	23 – 3
1WD–H2131–00	41 – 8
5TL–H2131–00	25 – 16
1WD–H2151–01	41 – 17
1WD–H2151–10	41 – 11
1WD–H2151–20	41 – 10
1WD–H2151–30	41 – 12
1WD–H2155–00	41 – 16
1WD–H2310–00	41 – 1
B9T–H2314–00	41 – 2
B9T–H2314–10	41 – 3
BR5–H2370–00	41 – 5
B9T–H2501–00	41 – 26
1WD–H2530–10	42 – 19
1WD–H2540–00	42 – 3
1WD–H2566–01	41 – 29
1WD–H2576–00	42 – 20
B6W–H2590–00	41 – 9
1WD–H2591–00	41 – 31
BR5–H2592–00	42 – 18
1WD–H2910–00	40 – 9
1WD–H2911–00	40 – 10
5BP–H2917–00	40 – 16
B9T–H3310–00	36 – 1
B9T–H3320–00	36 – 2
B9T–H3330–00	36 – 3
B9T–H3340–00	36 – 4
B9T–H3371–00	42 – 26
1WD–H3378–00	42 – 28
B4W–H3500–01	37 – 1
B9T–H3519–00	37 – 5
B5P–H3571–00	37 – 2

PART NO.	REF. NO.
BS7–H3572–01	37 – 3
54P–H3591–00	42 – 6
B9T–H3836–00	42 – 25
1WD–H3912–00	40 – 11
1WD–H3922–00	31 – 8
3AY–H3936–00	40 – 21
3RS–H3936–00	40 – 6
B9T–H3972–00	40 – 1
B9T–H3975–00	40 – 3
2DP–H3980–01	31 – 11
B9T–H411E–00	38 – 4
B9T–H4144–00	38 – 7
B9T–H4196–00	38 – 22
B9T–H4300–00	38 – 1
B9T–H4369–00–P4	38 – 18
B9T–H4410–00	38 – 15
2SN–H4527–00	38 – 43
1WD–H4547–00	39 – 10
B9T–H454L–00	38 – 45
1WD–H4710–02	39 – 1
1WD–H4726–00	39 – 11
BS7–H4740–00	39 – 8
1WD–H4744–00	39 – 9
1WD–H4753–00	39 – 12
2FC–H5111–00	18 – 12
3C1–H5130–00	42 – 30
B6W–H5546–00	42 – 2
BS7–H5752–00	23 – 21
BS8–H591A–00	42 – 1
1WD–H592A–00	42 – 8
2WD–H5930–07	43 – 1
4C9–W0048–00	27 – 6
5YP–W0048–50	29 – 8
1WD–WF461–00	23 – 15
1WD–WF479–00	25 – 11
B9T–XF137–00–3E	24 – 44
B9T–XF137–00–P4	24 – 44
B9T–XF13A–00–3E	24 – 54
B9T–XF13A–00–P4	24 – 54
BS7–XF151–20–P9	18 – 1
BS7–XF151–40–P6	18 – 1
1WD–XF171–00–PC	19 – 1
1WD–XF171–20–PC	19 – 1
1WD–XF172–00–PC	19 – 10
1WD–XF172–20–PC	19 – 10
B9T–XF17D–90–P4	24 – 35
B9T–XF17D–A1–P0	24 – 35
B9T–XF41D–00–3E	24 – 1
B9T–XF41D–00–P2	24 – 1
B9T–XH250–00	41 – 28
90105–06027	1 – 3
90105–07800	4 – 4
90105–088F7	10 – 6
90105–088F8	2 – 16
90105–088G0	10 – 7
90105–088G7	9 – 21
90105–106A7	32 – 5
90105–10883	2 – 8
	34 – 4
90105–10889	17 – 9
90105–10891	17 – 10
90105–12093	20 – 15
90105–12309	20 – 8
90105–14102	21 – 8
90109–05003	18 – 33
90109–060G4	41 – 27
90109–063F1	18 – 16
90109–06577	31 – 10
90109–06898	1 – 14
90109–06899	1 – 23
90109–068B2	24 – 7
90109–085G6	32 – 17
	32 – 30
90110–05806	23 – 16
90110–05809	41 – 30
90110–06087	24 – 12
	24 – 28
90110–06161	4 – 13
	4 – 15
	12 – 5
90110–06177	34 – 3
90110–06178	11 – 15
90110–06182	15 – 11
90110–06865	38 – 44
90110–06870	1 – 10
90110–06882	10 – 11
90110–08071	32 – 39
	32 – 47
90111–05003	19 – 35
	19 – 46
	19 – 49
	38 – 5
90111–05018	18 – 26
90111–05021	18 – 23
90111–05056	24 – 37
90111–06013	32 – 16
90111–06029	38 – 26
90111–06086	38 – 31
	38 – 35
90111–06117	19 – 54
	39 – 2
90111–06119	20 – 13
90111–06121	33 – 20
90111–06137	18 – 7
90111–06151	6 – 25
90111–06152	9 – 26
90111–06802	9 – 6
90111–06847	9 – 11
	18 – 8
90111–06870	38 – 21
90111–08087	27 – 2
	29 – 2
90116–10065	28 – 14
90119–05020	24 – 18
	24 – 34
90119–06309	24 – 6
90119–06810	19 – 9
	19 – 18
90123–08083	40 – 18
90149–05029	26 – 9
	28 – 20
90149–10044	27 – 13
90151–03005	40 – 17
90159–06054	25 – 13
90160–04009	42 – 21
90160–05009	24 – 20
	24 – 23
	24 – 40
	24 – 43
	38 – 9
	38 – 13
90160–05012	6 – 28
90160–05810	19 – 40
90170–06023	16 – 15
90170–18221	13 – 11
90176–06065	31 – 33
90179–07652	2 – 4
90179–08316	40 – 19
90179–10805	17 – 11
90179–20013	14 – 33
90179–25615	21 – 3
90183–05076	18 – 17
	24 – 16
	24 – 32
90183–05076	38 – 6
90183–050A7	18 – 24
	19 – 4
	19 – 13
90183–05807	19 – 3
	19 – 12
	19 – 42
	19 – 44
	19 – 62
	24 – 4
	24 – 9
	24 – 22
	24 – 25
	24 – 42
	24 – 46
	24 – 56
	38 – 10
	38 – 14
	38 – 17
	39 – 5
90183–05M02	24 – 47
	24 – 57
	38 – 27
90183–06011	9 – 18
90183–06818	9 – 7
	17 – 19
90201–04028	42 – 22
90201–04804	39 – 14
90201–05036	38 – 37
90201–05043	42 – 32
90201–05827	37 – 8
90201–06072	6 – 16
90201–06088	9 – 17
90201–06380	19 – 36
90201–08083	33 – 17
90201–08612	9 – 22
90201–10021	16 – 20
	32 – 26
90201–10074	21 – 15
90201–10118	31 – 19
	31 – 23
	31 – 26
	31 – 29
	33 – 24
	33 – 27
90201–10119	7 – 6
90201–10843	13 – 16
90201–10845	1 – 9
90201–10848	2 – 9
	34 – 5
90201–10854	17 – 8
90201–127E1	16 – 7
90201–16812	2 – 19
90201–17809	28 – 25
90201–20023	14 – 32
90201–20276	14 – 25
90201–22013	13 – 12
90202–05180	24 – 38
90202–26142	21 – 4
90206–14001	16 – 19
90209–25011	14 – 15
90214–22008	14 – 3
	14 – 20
90215–18800	13 – 10
90240–08124	33 – 16
90240–08145	32 – 13
	32 – 22
	32 – 37
	32 – 45
90269–05008	23 – 37
90269–06816	6 – 27
	18 – 20
	18 – 35
	19 – 8
	19 – 17
	19 – 21
	19 – 24
	23 – 48
	24 – 21
	24 – 41
90269–07012	6 – 26
90269–07076	24 – 65
90269–09001	24 – 66
90280–05013	34 – 6
90282–04036	2 – 17
90338–06018	6 – 29
90338–06810	21 – 12
90338–16262	10 – 2
90338–23801	17 – 13
90340–12808	7 – 14
90340–18002	1 – 4
90340–32819	11 – 5
90387–05042	39 – 16
90387–06130	6 – 24
90387–06242	20 – 12
	38 – 25
90387–06273	9 – 10
90387–064W3	6 – 17
90387–066J9	18 – 29
90387–067V1	39 – 3
90387–06857	19 – 28
90387–06899	18 – 3
	18 – 5
	19 – 6
	19 – 15
	19 – 55
	24 – 3
	24 – 11
	24 – 27
	38 – 30
	38 – 34
90387–068L9	18 – 30
90387–068M3	23 – 7
90387–068N4	9 – 16
90387–068S8	23 – 12
90387–06M60	43 – 5
90387–07819	17 – 17
90387–087L0	9 – 25
90387–08813	17 – 26
	32 – 49
90387–09801	19 – 57
90387–10010	32 – 6
90387–10107	24 – 15
	24 – 31
90387–17810	28 – 2
90387–20814	14 – 24
90388–10816	17 – 5
	21 – 7
90401–10812	31 – 18
	31 – 22
	31 – 25
	31 – 28
	33 – 23
	33 – 26
90401–20011	7 – 12
90413–06031	8 – 23
90430–06014	4 – 8
	5 – 15
	10 – 12
90430–08119	1 – 6
90430–08143	11 – 4
90430–10804	42 – 7
90445–217G3	32 – 8
90450–28001	6 – 7

PART NO.	REF. NO.
90450–55804	8 – 4
90462–08225	11 – 24
90462–08806	11 – 20
90462–08810	7 – 18
90462–08819	11 – 19
90464–08009	41 – 33
90464–10008	23 – 36
90464–10800	43 – 21
90464–12013	43 – 14
90464–12015	17 – 20
90464–14803	43 – 20
	43 – 22
90464–15014	23 – 39
90464–16003	40 – 7
90464–16006	23 – 52
90464–16012	23 – 32
90464–22800	41 – 23
	43 – 12
90464–26001	41 – 32
90464–30001	40 – 8
90464–30009	33 – 30
	41 – 34
90464–36005	41 – 24
90464–36800	41 – 21
90464–70800	41 – 22
	41 – 25
90467–08003	19 – 33
90467–09006	23 – 34
	23 – 42
	23 – 51
90467–090A2	8 – 24
90467–11009	23 – 50
90467–110A3	8 – 38
90467–12052	8 – 43
90467–12085	33 – 14
90467–13802	8 – 42
	8 – 45
90467–15012	23 – 30
90467–16800	1 – 35
90467–16801	1 – 32
	1 – 34
90467–250A1	6 – 6
90480–01558	17 – 28
90480–01559	24 – 17
	24 – 33
	24 – 50
	24 – 60
90480–01806	23 – 18

PART NO.	REF. NO.
90480–10003	39 – 6
90480–11009	39 – 15
90480–12581	9 – 9
	9 – 24
90480–12808	18 – 2
	18 – 4
	19 – 5
	19 – 14
	19 – 56
	24 – 2
	24 – 13
	24 – 29
	38 – 20
	38 – 29
	38 – 33
90480–13001	39 – 4
90480–13398	17 – 16
90480–14004	38 – 36
90480–14229	37 – 6
	43 – 6
90480–15807	23 – 11
90480–15808	6 – 18
90480–17007	24 – 14
	24 – 30
90480–18418	19 – 58
90480–18813	23 – 6
90501–06022	15 – 3
90501–080A2	15 – 8
90501–12743	32 – 34
	32 – 42
90501–22800	2 – 20
90506–23812	32 – 4
90506–26807	32 – 27
90508–18136	13 – 18
90508–183B9	32 – 12
	32 – 21
90508–29806	16 – 5
90520–02843	23 – 4
90520–10834	38 – 2
90520–20819	38 – 12
90560–06244	19 – 38
91312–05008	41 – 18
91312–05010	23 – 17
	23 – 26
	30 – 8
91312–05012	11 – 2
91312–06010	5 – 12
91317–06012	43 – 17

PART NO.	REF. NO.
91317–06020	30 – 5
91317–08025	21 – 11
91317–08030	21 – 9
91317–10020	17 – 23
91317–10040	22 – 41
91317–10045	17 – 24
91317–10060	17 – 7
91332–06016	8 – 3
	42 – 11
91332–06020	1 – 22
	4 – 10
91332–06030	7 – 8
91401–20012	33 – 18
91401–25015	32 – 14
	32 – 23
	32 – 38
	32 – 46
92012–06014	38 – 40
92012–06016	43 – 19
92012–08030	33 – 19
92014–08012	11 – 3
92902–08600	13 – 20
	28 – 28
92907–10600	17 – 25
93101–20802	14 – 11
	14 – 27
93102–12891	16 – 10
93102–15801	5 – 4
93102–35808	14 – 30
93106–23002	28 – 4
93106–26815	26 – 3
93106–38046	28 – 8
93210–068F7	10 – 14
93210–108H5	40 – 14
93210–12803	10 – 3
93210–15566	42 – 10
93210–15620	33 – 7
93210–16716	1 – 28
93210–21801	42 – 4
93210–27807	5 – 19
93210–32816	11 – 6
93210–39802	8 – 2
93306–20314	28 – 3
93306–255Y9	14 – 8
93306–302X4	26 – 4
93306–30450	28 – 7
93311–420Y3	14 – 10
	14 – 26

PART NO.	REF. NO.
93315–21570	5 – 3
93317–11096	5 – 2
93317–11295	16 – 9
93320–32403	20 – 5
93399–99932	22 – 40
93399–999Y3	21 – 1
93440–24200	14 – 4
	14 – 21
93440–28184	14 – 16
93440–52009	14 – 9
93450–16068	2 – 14
93501–04830	32 – 35
	32 – 43
93605–10090	2 – 21
93900–00828	26 – 6
	28 – 17
94111–17801	26 – 5
94114–17802	28 – 16
94568–H3112	28 – 31
94568–K0118	4 – 5
94700–00436	1 – 11
95022–06008	4 – 7
95022–06010	43 – 3
95022–06012	19 – 59
	25 – 4
	38 – 41
95022–06014	17 – 18
95022–06020	6 – 3
	31 – 16
	31 – 20
	41 – 4
95022–06025	5 – 16
	7 – 17
	11 – 9
	11 – 12
	11 – 18
	11 – 23
	24 – 69
	35 – 7
	43 – 4
95022–06050	11 – 13
95022–08012	1 – 5
95022–08014	23 – 14
95027–06010	9 – 3
95027–06012	31 – 31
	31 – 32
	43 – 8
	43 – 10

PART NO.	REF. NO.
95027–06016	23 – 47
	43 – 13
95027–06025	31 – 13
95027–08012	23 – 40
95027–08035	9 – 15
95302–06600	16 – 16
95302–08600	28 – 29
95602–05100	42 – 31
95602–06100	31 – 9
	40 – 15
95602–06200	18 – 31
95602–10200	28 – 15
	32 – 7
95602–12100	20 – 10
	20 – 16
95602–14200	20 – 6
	26 – 12
95602–16200	28 – 24
95607–08200	9 – 27
95607–10100	21 – 14
95612–08625	1 – 7
95702–05500	18 – 13
95702–06500	18 – 9
95707–06500	25 – 9
95707–08500	9 – 20
95802–06010	30 – 10
	32 – 29
95807–06014	19 – 37
95812–06035	10 – 8
95812–06045	10 – 9
95812–06065	10 – 10
95817–06012	23 – 9
95817–10025	32 – 3
95827–06025	6 – 15
95D02–06012	31 – 14
95D02–06016	42 – 15
95D02–06025	42 – 17
95D07–06016	42 – 29
95D07–08012	42 – 27
95D32–06010	8 – 40
95D37–06014	33 – 29
97012–06020	16 – 21
97022–06030	23 – 8
	23 – 13
97507–06525	40 – 20
97602–04212	31 – 12
97607–04230	40 – 5
97702–50012	19 – 60

PART NO.	REF. NO.
97702–50016	19 – 47
	19 – 50
	24 – 10
	24 – 26
	25 – 14
	37 – 7
97702–50025	8 – 32
97707–30020	37 – 4
97707–30505	6 – 14
97707–40020	39 – 13
97707–50016	18 – 25
	19 – 20
	19 – 23
	19 – 26
	24 – 48
	24 – 58
	38 – 3
	38 – 8
	38 – 16
	38 – 38
98502–05016	42 – 5
98502–06012	8 – 9
98507–04025	40 – 2
98507–04030	40 – 4
98902–05020	8 – 35
99002–07600	13 – 21
99009–08400	5 – 10
99009–10400	7 – 5
	13 – 17
99009–12400	16 – 6
99009–15500	7 – 2
99530–08012	7 – 7
	11 – 8
	11 – 11
99530–10014	10 – 5
99530–14016	1 – 13
	1 – 29