YAMAHA

PARTS CATALOGUE

WMB

GDR155-A (BDL1) MALAYSIA
GDR155 (BDL2) MALAYSIA
GDR155-A (BDL4) MALAYSIA

YAMAHA GENUINE Parts & Accessories

CM6

RM7

DPBMC

1WBDL-440E1

( )

GDR155-A/GDR155
PARTS CATALOGUE
©2021 by Yamaha Motor Co., Ltd.
1st edition, January 2021
All rights reserved.
Any reprinting or unauthorized use
without the written permission of
Yamaha Motor Co., Ltd.
is expressly prohibited.
Printed in Japan.

FOREWORD

This Parts Catalogue is related to the parts for the model(s) on the cover page. When you are ordering replacement parts, please refer to this Parts Catalogue and quote both part numbers and part names correctly.

1. Modifications or additions which have been made after the issue of the Parts Catalogue will be announced in the Parts News.
   It is advisable that you make the necessary corrections to the Parts Catalogue according to the Parts News.

2. Abbreviations
   The following abbreviations are used in this Parts Catalogue.

   "UR" Use specified parts number.

   "UN" Use as many as needed.

   "AP" Alternate Parts

   "LM" Locally Made (Parts need to be ordered locally)

   "F#" Frame No. (Applicable machine No.)

   "O/S" Over Size

3. The number of components for assembly
   - Parts, which are to be supplied in an assembly, are listed with a dot (.) in front of the part name as shown below.
   - The numeral appearing to the right of each component part indicates the quantity of parts for each assembly unit.

PART NO.	DESCRIPTION	Q'TY	REMARKS
2F5–83310–60	FRONT FLASHER LIGHT ASSY	2	
115–83311–60	.BULB (6V–18W)	1	

4. Applicable colours of graphics are represented in the "REMARKS" as shown below.

PART NO.	DESCRIPTION	Q'TY	REMARKS
2N4–24110–00–X5	FUEL TANK COMP.	2	MXR
3J1–24240–10	.GRAPHIC, FUEL TANK	1	FOR MXR

5. Note that the illustrations for reference in finding parts numbers are not to be used for assembling. When assembling, please use the applicable service manual.

6. The asterisk (*) before a reference number indicates modified items after the first edition.

7. Applicable Serial No.

Frame Serial No.

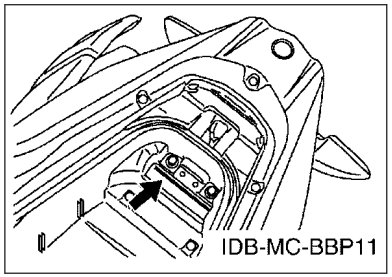

Engine Serial No.

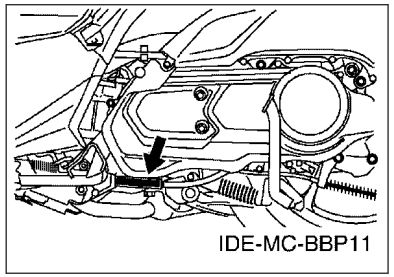

8. Applicable Colour Code (The (*) mark shows Model colour.)

Abbreviation	Colour Name	Colour Code
CM6(*)	CYAN METALLIC 6	1344
DPBM15	DEEP PURPLISH BLUE METALLIC 15	1329
DPBMC(*)	DEEP PURPLISH BLUE METALLIC C	0564
LNYMD	LIGHT GRAYISH YELLOW ME D	1785
MBL2	MAT BLACK 2	0582
MBNM3	MAT BLUISH GRAY METALLIC 3	1758
MNM3	MAT GRAY METALLIC 3	1278
RM7(*)	RED METALLIC 7	1218
SMX	BLACK METALLIC X	0903
WMB(*)	WHITE METALLIC B	1786
YB	YAMAHA BLACK	0033

9. Applicable Starting Serial No.

Frame Serial No.

Serial No.	Name Of Q’ty Column	Model Code

Engine Serial No.

Serial No.	Name Of Q’ty Column	Model Code

CONTENTS

ENGINE

CYLINDER....1
CRANKSHAFT & PISTON....3
VALVE....4
CAMSHAFT & CHAIN....5
WATER PUMP....6
RADIATOR & HOSE....7
OIL PUMP....9
INTAKE....10
EXHAUST....12
CRANKCASE....13
CRANKCASE COVER 1....15
CLUTCH....16
TRANSMISSION....18

CHASSIS

FRAME....19
FENDER....21
SIDE COVER....23
SIDE COVER 2....25
SIDE COVER 3....28
REAR ARM & SUSPENSION....30
STEERING....31
FRONT FORK....32
FUEL TANK....34
SEAT....35
FRONT WHEEL....37
FRONT BRAKE CALIPER....38
REAR WHEEL....39
STEERING HANDLE & CABLE....40
FRONT MASTER CYLINDER....42
FRONT MASTER CYLINDER 2....43
STAND & FOOTREST....44
LEG SHIELD....47
LEG SHIELD 2....50
LEG SHIELD 3....54
GENERATOR....57
FLASHER LIGHT....58
METER....59
HEADLIGHT....60
TAILLIGHT....61
HANDLE SWITCH & LEVER....62
ELECTRICAL 1....63
ELECTRICAL 2....65
ELECTRICAL 3....66
ELECTRICAL 4....68

INDEX

NUMERICAL INDEX....69

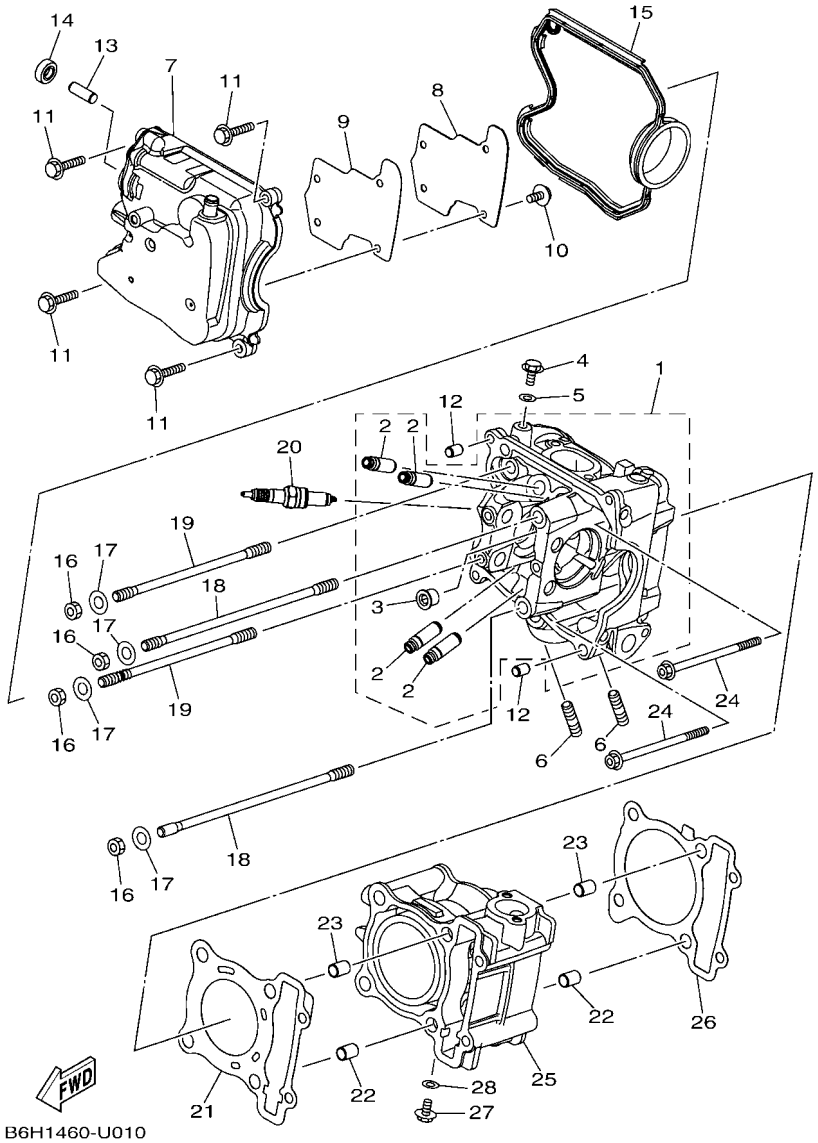

FIG. 1 CYLINDER

REF. NO.	PART NO.	DESCRIPTION	BDL1	BDL2	BDL4			REMARKS
1	BBB–E1102–00	CYLINDER HEAD ASSY	1	1	1			
2	2DP–E1133–10	.GUIDE, VALVE 1	4	4	4			
3	90340–12813	.PLUG, STRAIGHT SCREW	1	1	1			
4	95E32–06010	BOLT, FLANGE DEEP RECESS	1	1	1			
5	90430–06803	GASKET	1	1	1			
6	95612–08618	BOLT, STUD	2	2	2			
7	2DP–E1191–00	COVER, CYLINDER HEAD 1	1	1	1			
8	2DP–E1165–00	PLATE, BREATHER	1	1	1			
9	2DP–E1169–00	GASKET, BREATHER COVER	1	1	1			
10	90149–05801	SCREW	4	4	4			
11	95E32–06030	BOLT, FLANGE DEEP RECESS	4	4	4			
12	99530–08012	PIN, DOWEL	2	2	2			
13	2DP–E132G–00	ROD 1	1	1	1			
14	93102–08800	OIL SEAL	1	1	1			
15	B3F–E1193–00	GASKET, HEAD COVER 1	1	1	1			
16	90170–08810	NUT	4	4	4			
17	90201–08859	WASHER, PLATE	4	4	4			
18	BB8–E1391–00	BOLT, STUD 1	2	2	2			
19	BB8–E1392–00	BOLT, STUD 2	2	2	2			
20	94700–00415	PLUG, SPARK (NGK CPR8EA)	1	1	1			
21	2DP–E1181–00	GASKET, CYLINDER HEAD 1	1	1	1			
22	99530–10114	PIN, DOWEL	2	2	2			
23	99530–10114	PIN, DOWEL	2	2	2			
24	90110–06378	BOLT, HEXAGON SOCKET HEAD	2	2	2			
25	B6H–E1311–00	CYLINDER 1	1	1	1			
26	B6H–E1351–00	GASKET, CYLINDER	1	1	1			
27	95E32–06010	BOLT, FLANGE DEEP RECESS	1	1	1			

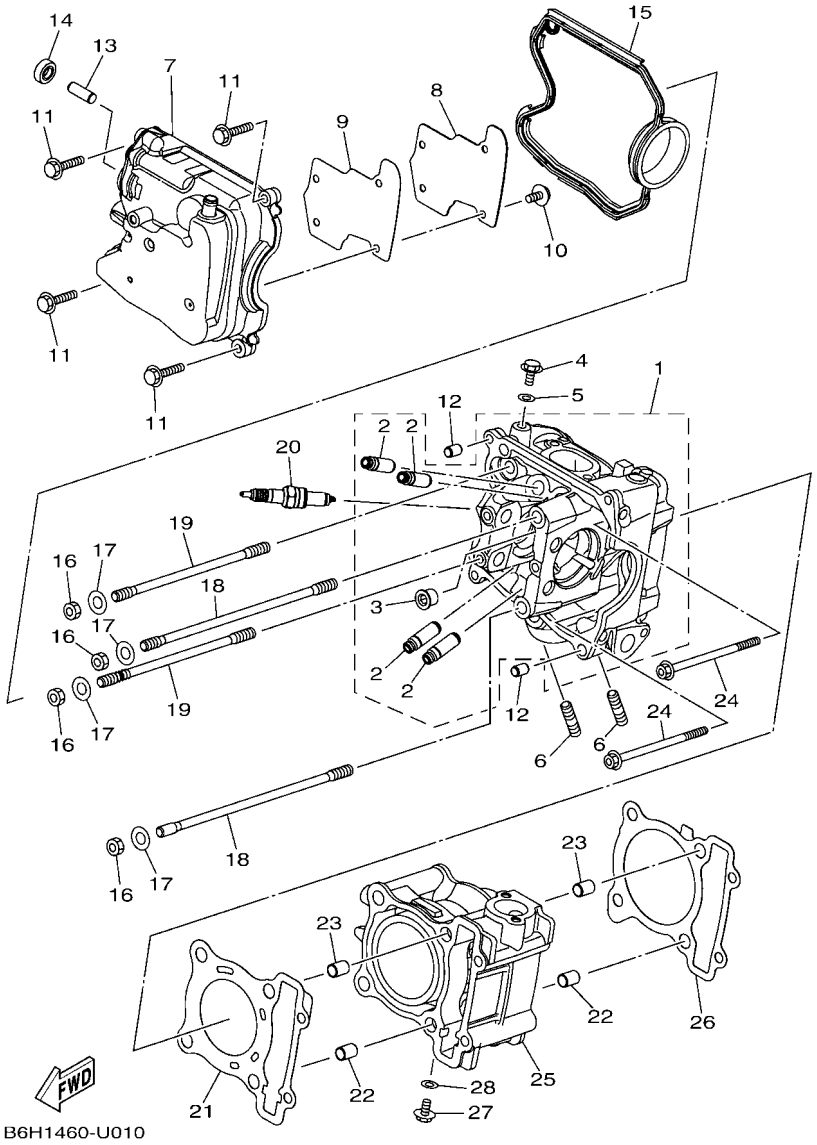

FIG. 1 CYLINDER

REF. NO.	PART NO.	DESCRIPTION	BDL1	BDL2	BDL4			REMARKS
28	90430–06803	GASKET	1	1	1			

FIG. 2 CRANKSHAFT & PISTON

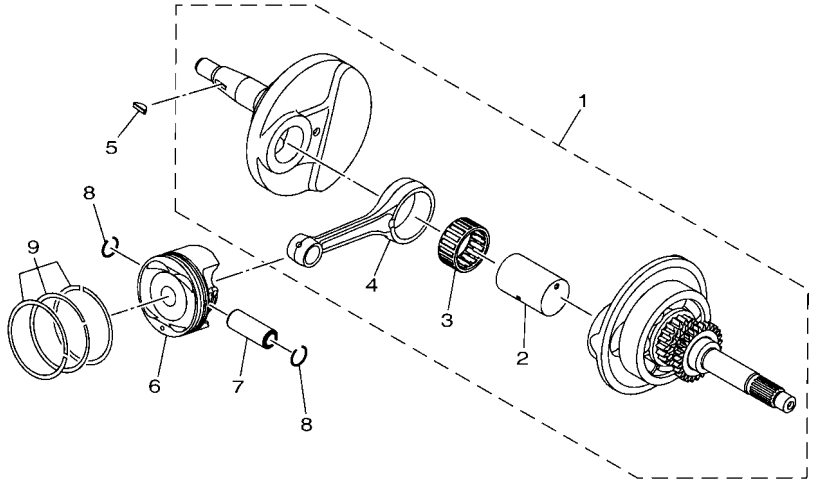

B6H1460-U020

REF. NO.	PART NO.	DESCRIPTION	BDL1	BDL2	BDL4			REMARKS
1	B6H–E1400–10	CRANKSHAFT ASSY	1	1	1			
2	B63–E1681–00	.PIN, CRANK 1	1	1	1			
3	93310–528YK	.BEARING	1	1	1			
4	2DP–E1651–00	.ROD, CONNECTING	1	1	1			
5	90280–03017	KEY, WOODRUFF	1	1	1			
6	BK6–E1631–00	PISTON (STD)	1	1	1			
7	2DP–E1633–00	PIN, PISTON	1	1	1			
8	93450–16115	CIRCLIP	2	2	2			
9	B63–E1603–00	PISTON RING SET (STD)	1	1	1			

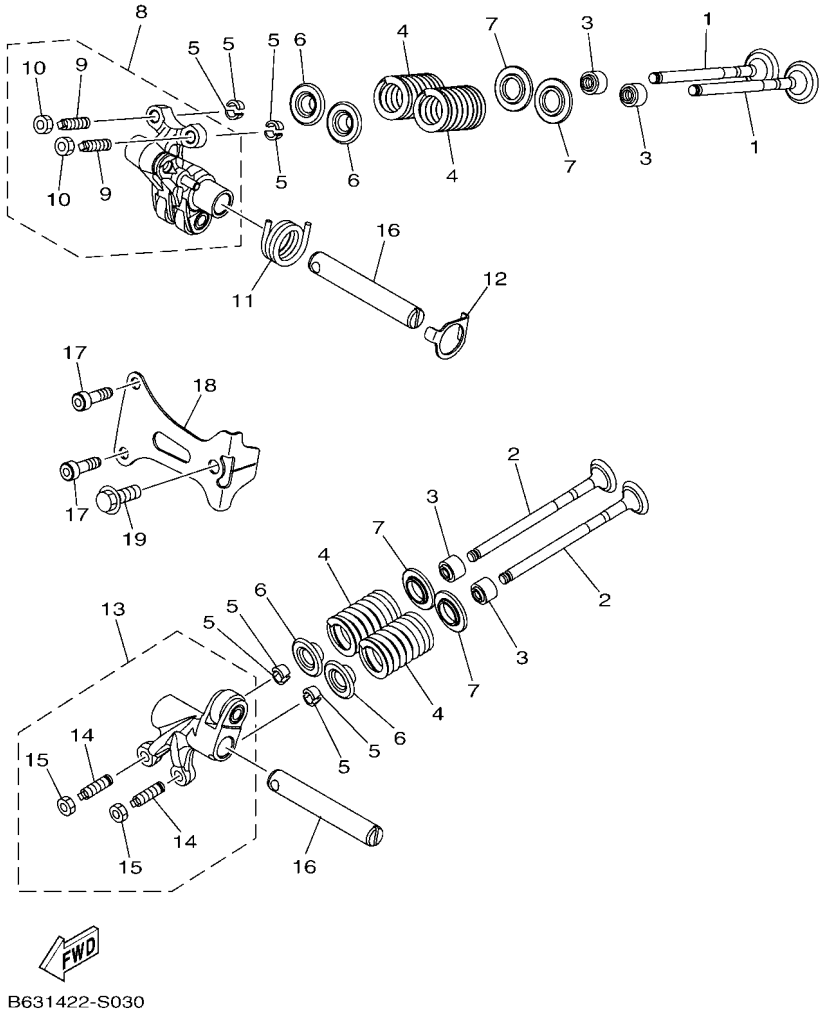

FIG. 3 VALVE

REF. NO.	PART NO.	DESCRIPTION	BDL1	BDL2	BDL4			REMARKS
1	BK6–E2111–00	VALVE, INTAKE	2	2	2			
2	B3F–E2121–00	VALVE, EXHAUST	2	2	2			
3	54P–E2119–00	SEAL, VALVE STEM	4	4	4			
4	BB8–E2113–01	SPRING, VALVE INNER	4	4	4			
5	5TL–E2118–00	LOCK, VALVE SPRING RETAINER	8	8	8			
6	2DP–E2117–00	RETAINER, VALVE SPRING	4	4	4			UR
	B63–E2117–00	RETAINER, VALVE SPRING	4	4	4			UR
7	50C–E2126–00	SEAT, VALVE SPRING 2	4	4	4			
8	2DP–E2150–00	VALVE ROCKER ARM ASSY	1	1	1			
9	33S–E2159–01	.SCREW, VALVE ADJUSTING	2	2	2			
10	90170–05803	.NUT	2	2	2			
11	BB8–E2226–00	SPRING, COIL	1	1	1			
12	2DP–E2279–00	PLATE	1	1	1			UR
	B63–E2279–00	PLATE	1	1	1			UR
13	B6H–E2160–00	VALVE ROCKER ARM ASSY 2	1	1	1			
14	33S–E2159–01	.SCREW, VALVE ADJUSTING	2	2	2			
15	90170–05803	.NUT	2	2	2			
16	B65–E2156–00	SHAFT, ROCKER 2	2	2	2			
17	91312–05016	BOLT, HEXAGON SOCKET HEAD	2	2	2			
18	2DP–E111F–00	PLATE	1	1	1			UR
	B63–E111F–00	PLATE	1	1	1			UR
19	95E32–06014	BOLT, FLANGE DEEP RECESS	1	1	1			

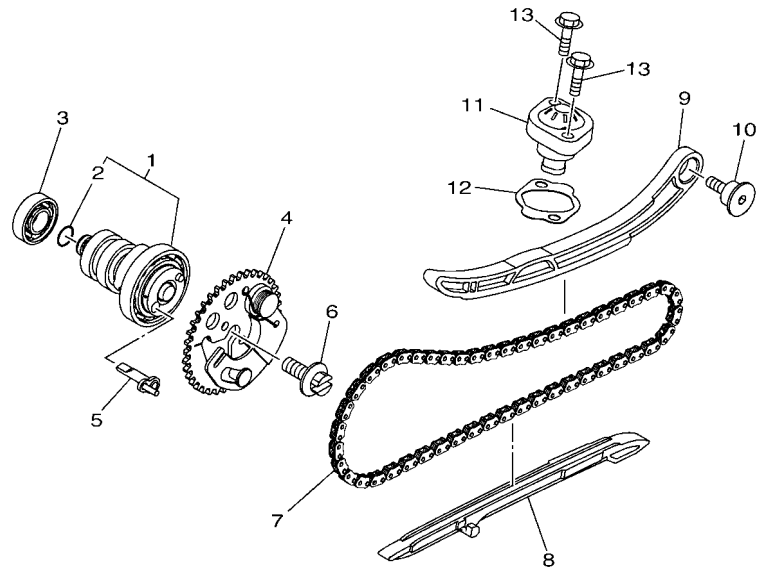

BBP1460-W040

FIG. 4 CAMSHAFT & CHAIN

REF. NO.	PART NO.	DESCRIPTION	BDL1	BDL2	BDL4			REMARKS
1	B6H–E2170–00	CAMSHAFT ASSY 1	1	1	1			UR
	B6H–E2170–10	CAMSHAFT ASSY 1	1	1	1			UR
2	93210–09806	.O-RING	1	1	1			
3	93306–001X9	BEARING	1	1	1			
4	BBP–E2280–00	DECOMPRESSION ASSY	1	1	1			
5	B6H–E2288–00	CAM, DECOMPRESSION	1	1	1			
6	5YP–E2157–01	BOLT	1	1	1			UR
	B63–E2157–00	BOLT	1	1	1			UR
7	94568–F9096	CHAIN (DID SCR-0404 SV)	1	1	1			
8	B65–E2231–00	GUIDE, STOPPER 1	1	1	1			
9	B6H–E2241–00	GUIDE, STOPPER 2	1	1	1			
10	1DB–E2228–00	BOLT	1	1	1			
11	2PV–E2210–01	TENSIONER ASSY, CAM CHAIN	1	1	1			
12	B6H–E2213–00	GASKET, TENSIONER CASE	1	1	1			
13	95E32–06020	BOLT, FLANGE DEEP RECESS	2	2	2			

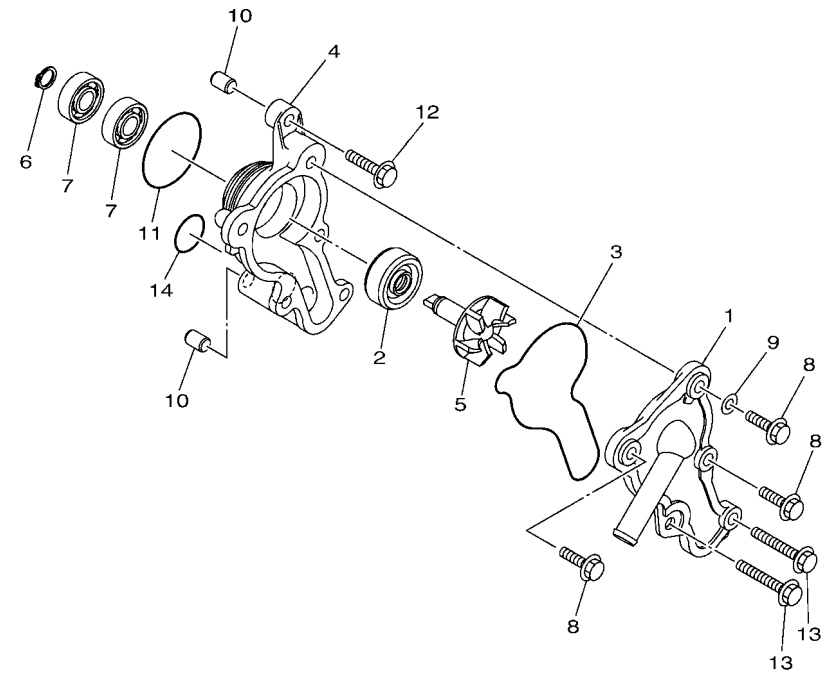

B6H1460-U050

FIG. 5 WATER PUMP

REF. NO.	PART NO.	DESCRIPTION	BDL1	BDL2	BDL4			REMARKS
1	B6H–E2422–00	COVER, HOUSING	1	1	1			
2	B6H–E2223–00	SEAL	1	1	1			
3	B6H–E2439–00	O-RING	1	1	1			
4	B6H–E1185–00	COVER, CYLINDER HEAD SIDE 3	1	1	1			
5	B6H–E2450–00	IMPELLER SHAFT ASSY	1	1	1			
6	99009–08400	CIRCLIP	1	1	1			
7	93300–608X0	BEARING	2	2	2			
8	95027–06020	BOLT, FLANGE	3	3	3			
9	90430–06803	GASKET	1	1	1			
10	99530–08012	PIN, DOWEL	2	2	2			
11	93210–39803	O-RING	1	1	1			
12	95E32–06025	BOLT, FLANGE DEEP RECESS	1	1	1			
13	95E32–06045	BOLT, FLANGE DEEP RECESS	2	2	2			
14	93210–19809	O-RING	1	1	1			

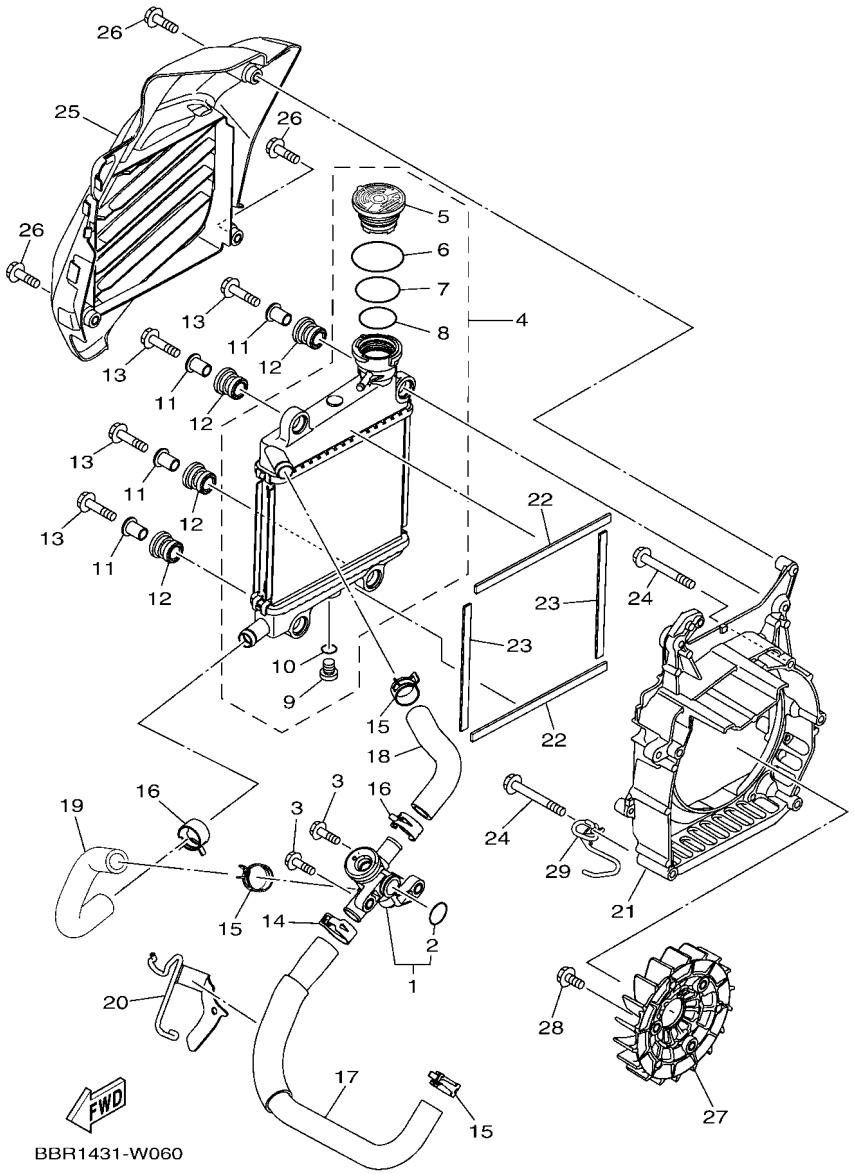

FIG. 6 RADIATOR & HOSE

REF. NO.	PART NO.	DESCRIPTION	BDL1	BDL2	BDL4			REMARKS
1	2DP–E2410–00	THERMOSTAT ASSY	1	1	1			
2	52S–12439–00	.O-RING	1	1	1			
3	95E32–06020	BOLT, FLANGE DEEP RECESS	2	2	2			
4	B6H–E240A–01	RADIATOR ASSY	1	1	1			
5	B65–E2462–02	.CAP, RADIATOR	1	1	1			
6	B63–E22A2–00	.O-RING	1	1	1			
7	B63–E2439–00	.O-RING	1	1	1			
8	B63–E2843–00	.O-RING	1	1	1			
9	5ST–E2615–00	.COCK, DRAIN	1	1	1			
10	5ST–E2843–00	.O-RING	1	1	1			
11	90387–08823	COLLAR	4	4	4			
12	90480–14833	GROMMET	4	4	4			
13	95D32–06030	BOLT, FLANGE DEEP RECESS	4	4	4			
14	90467–20806	CLIP	1	1	1			
15	90467–19803	CLIP	3	3	3			
16	90467–19803	CLIP	2	2	2			
17	B6H–E2481–00	PIPE 1	1	1	1			
18	B6H–E2482–00	PIPE 2	1	1	1			
19	B6H–E2483–00	PIPE 3	1	1	1			
20	B6H–E2491–00	CLAMP 1	1	1	1			
21	B6H–E2621–01	CASE, FAN	1	1	1			
22	90520–10853	DAMPER, PLATE	2	2	2			
23	90520–10855	DAMPER, PLATE	2	2	2			
24	95E32–06050	BOLT, FLANGE DEEP RECESS	5	5	5			
25	BBN–E2467–00	COVER, RADIATOR	1	1	1			
26	95E32–06020	BOLT, FLANGE DEEP RECESS	3	3	3			
27	B65–E2611–00	FAN	1	1	1			

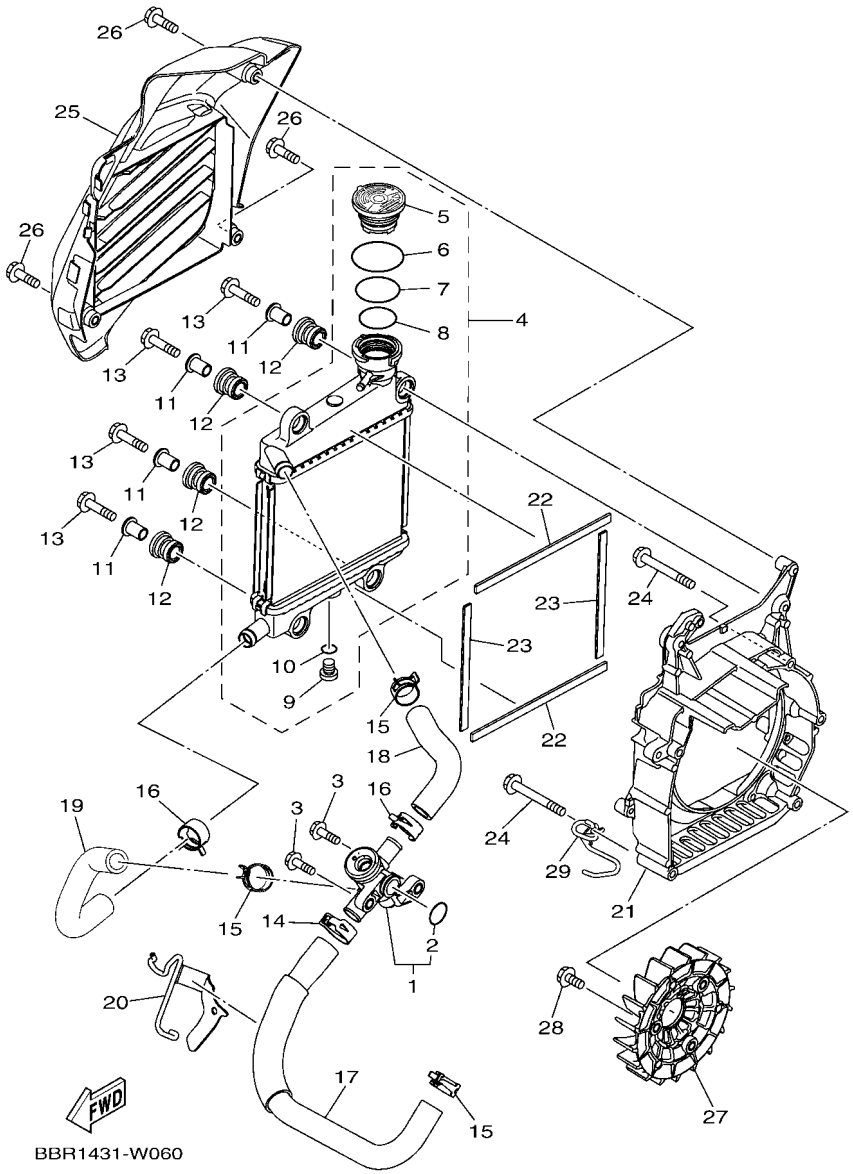

FIG. 6 RADIATOR & HOSE

REF. NO.	PART NO.	DESCRIPTION	BDL1	BDL2	BDL4			REMARKS
28	95D32–06016	BOLT, FLANGE DEEP RECESS	3	3	3			
29	BAL–E8179–00	GUIDE	1	1	1			

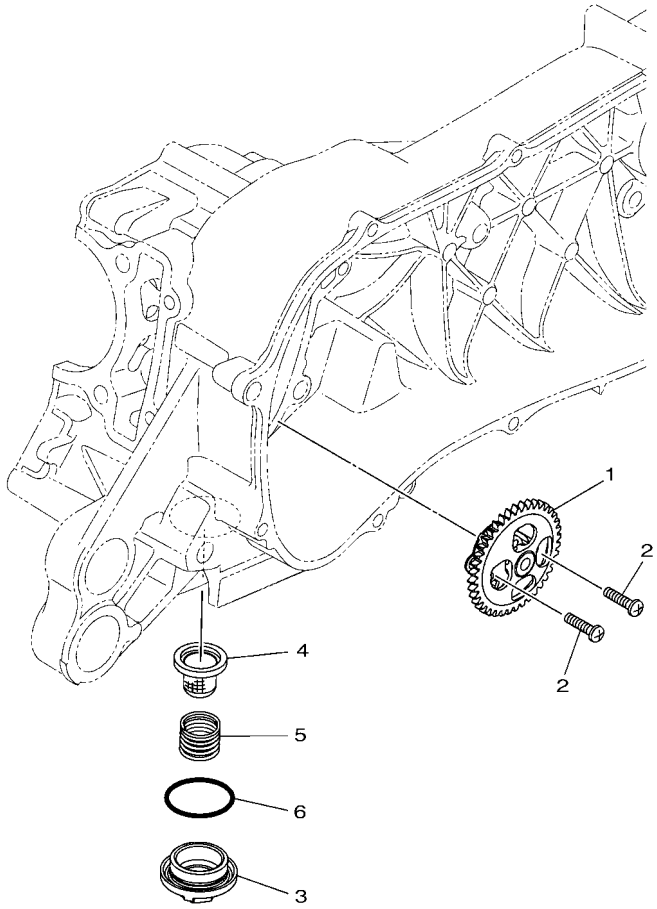

B6H1460-U070

FIG. 7 OIL PUMP

REF. NO.	PART NO.	DESCRIPTION	BDL1	BDL2	BDL4			REMARKS
1	B6H–E3300–01	OIL PUMP ASSY	1	1	1			
2	98502–05020	SCREW, PAN HEAD	2	2	2			
3	54P–E5351–01	PLUG, DRAIN	1	1	1			
4	54P–E3411–00	STRAINER, OIL	1	1	1			
5	90501–16004	SPRING, COMPRESSION	1	1	1			
6	93210–29800	O-RING	1	1	1			

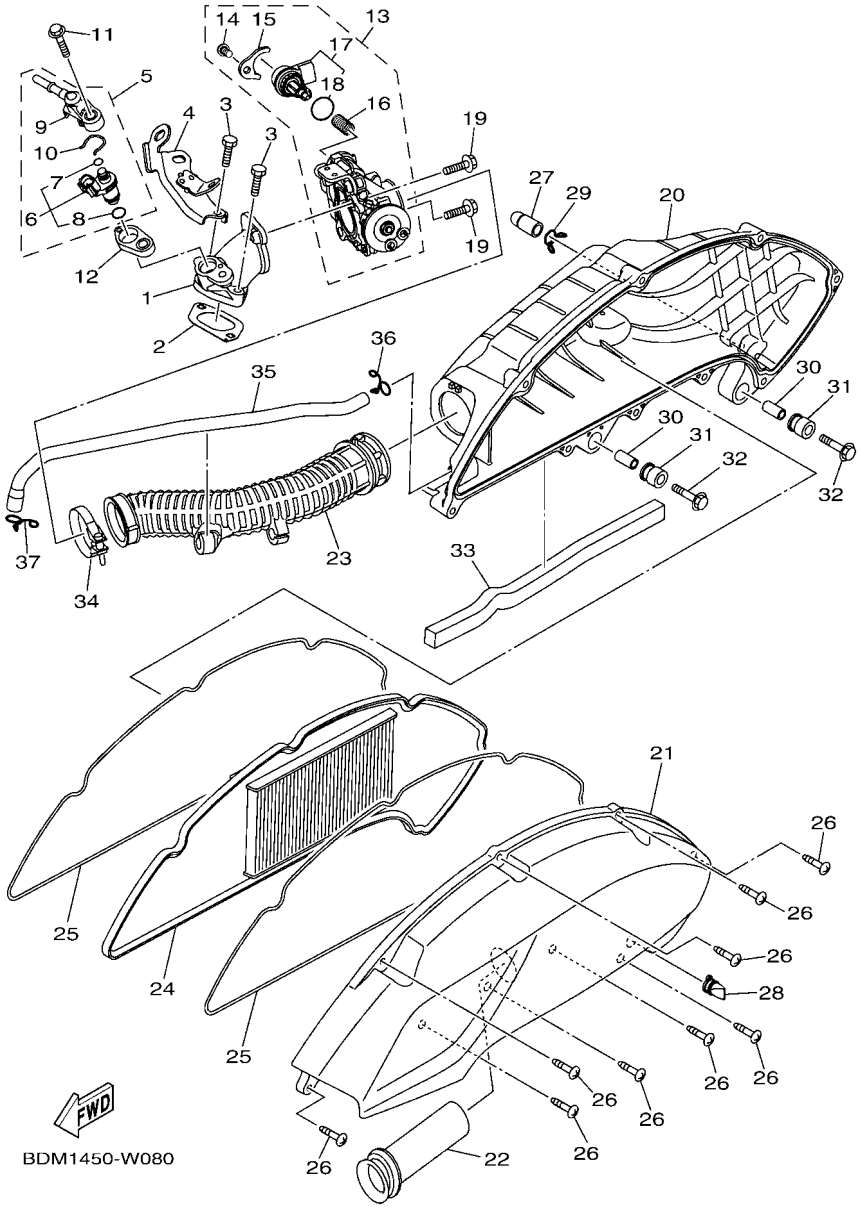

FIG. 8 INTAKE

REF. NO.	PART NO.	DESCRIPTION	BDL1	BDL2	BDL4			REMARKS
1	B6H–E3585–00	MANIFOLD	1	1	1			
2	B6H–E4199–00	GASKET	1	1	1			
3	91332–06025	BOLT	2	2	2			
4	BBP–E4146–00	PLATE	1	1	1			
5	2PV–E3770–00	INJECTOR ASSY	1	1	1			
6	2PV–E3761–00	.INJECTOR	1	1	1			
7	54P–E4147–00	..O-RING	1	1	1			
8	5CA–E4147–00	..O-RING	1	1	1			
9	54P–E3938–00	.PIPE	1	1	1			
10	54P–E4137–00	.CLIP	1	1	1			
11	95D32–06030	BOLT, FLANGE DEEP RECESS	1	1	1			
12	2DP–E3556–00	GASKET, MANIFOLD	1	1	1			
13	B65–E3750–10	THROTTLE BODY ASSY	1	1	1			
14	98502–06012	.SCREW, PAN HEAD	2	2	2			
15	54P–E4243–00	.PLATE	1	1	1			
16	54P–E4335–00	.SPRING, PLUNGER	1	1	1			
17	B63–H5801–00	.STEPPING MOTOR	1	1	1			
18	54P–E416A–00	..O-RING	1	1	1			
19	90110–06846	BOLT, HEXAGON SOCKET HEAD	2	2	2			
20	B6H–E4411–10	CASE, AIR CLEANER 1	1	1	1			
21	B6H–E4412–10	CAP, CLEANER CASE 1	1	1	1			
22	B6H–E4437–00	DUCT	1	1	1			
23	B6H–E4453–00	JOINT, AIR CLEANER 1	1	1	1			
24	B6H–E4451–00	ELEMENT, AIR CLEANER	1	1	1			
25	B6H–E4452–00	SEAL	2	2	2			
26	97707–50025	SCREW, TAPPING	9	9	9			
27	5TL–E443E–00	PIPE, DRAIN	1	1	1			

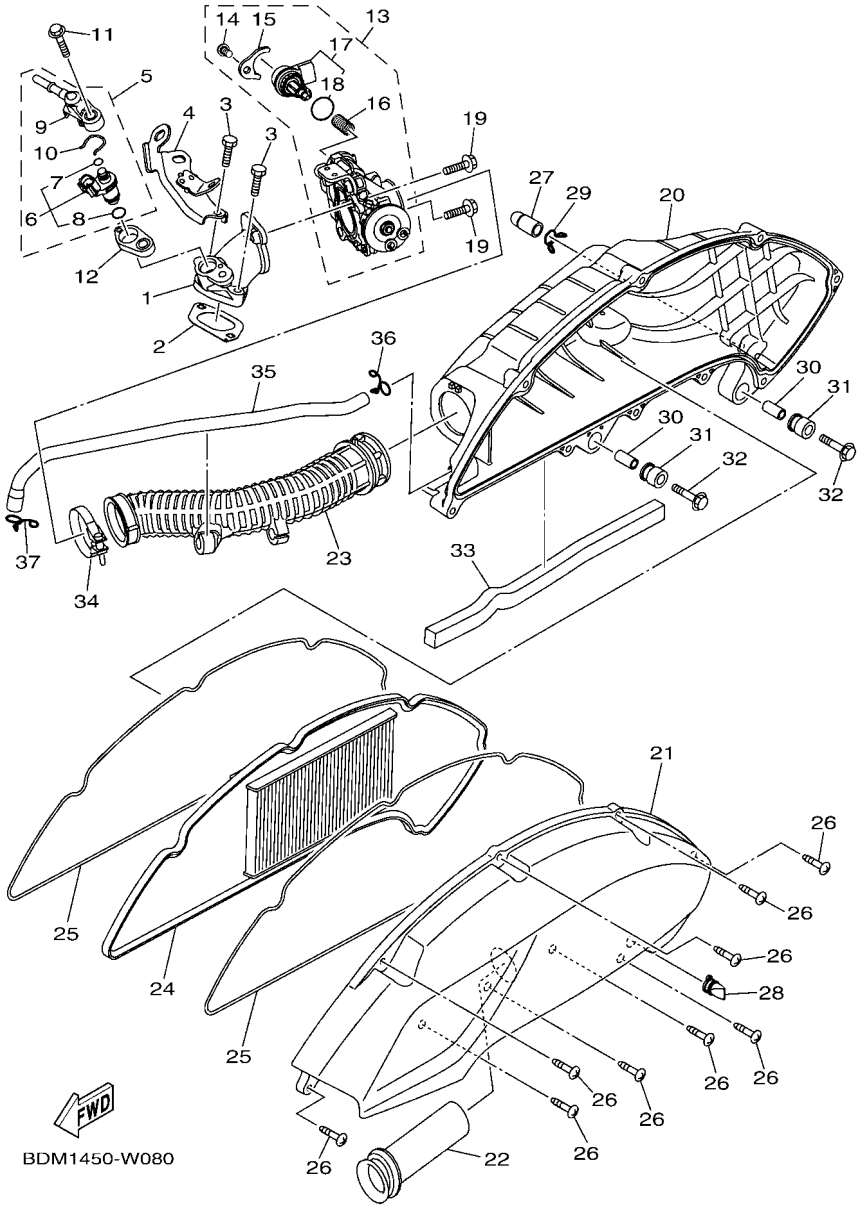

FIG. 8 INTAKE

REF. NO.	PART NO.	DESCRIPTION	BDL1	BDL2	BDL4			REMARKS
28	B5D–E443G–00	PIPE, DRAIN 2	1	1	1			
29	90467–12809	CLIP	1	1	1			
30	B74–E4449–00	COLLAR	2	2	2			
31	B6H–E4435–00	GROMMET	2	2	2			
32	95D32–06030	BOLT, FLANGE DEEP RECESS	2	2	2			
33	90520–15816	DAMPER, PLATE	1	1	1			
34	90450–43805	HOSE CLAMP ASSY	1	1	1			
35	BBP–E1166–00	PIPE, BREATHER 1	1	1	1			
36	90467–11825	CLIP	1	1	1			
37	90467–12052	CLIP	1	1	1			

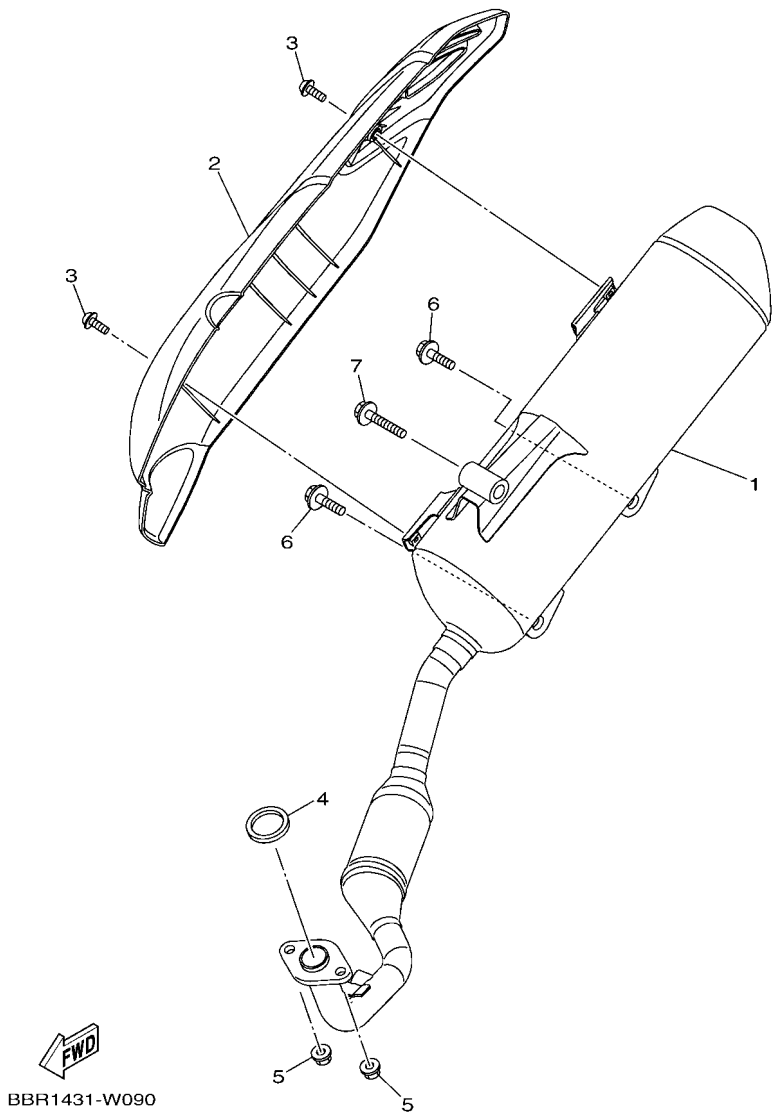

FIG. 9 EXHAUST

REF. NO.	PART NO.	DESCRIPTION	BDL1	BDL2	BDL4			REMARKS
1	BBR–E4711–00	MUFFLER 1	1	1	1			
2	B6H–E4718–00	PROTECTOR, MUFFLER 1	1	1	1			
3	90111–06860	BOLT,HEX. SOCKET BUTTON	2	2	2			
4	2DP–E4613–00	GASKET, EXHAUST PIPE	1	1	1			UR
	B63–E4613–00	GASKET, EXHAUST PIPE	1	1	1			UR
	BK7–E4613–00	GASKET, EXHAUST PIPE	1	1	1			UR
5	95702–08500	NUT, FLANGE	2	2	2			
6	95D32–10045	BOLT, FLANGE DEEP RECESS	2	2	2			
7	95D32–10060	BOLT, FLANGE DEEP RECESS	1	1	1			

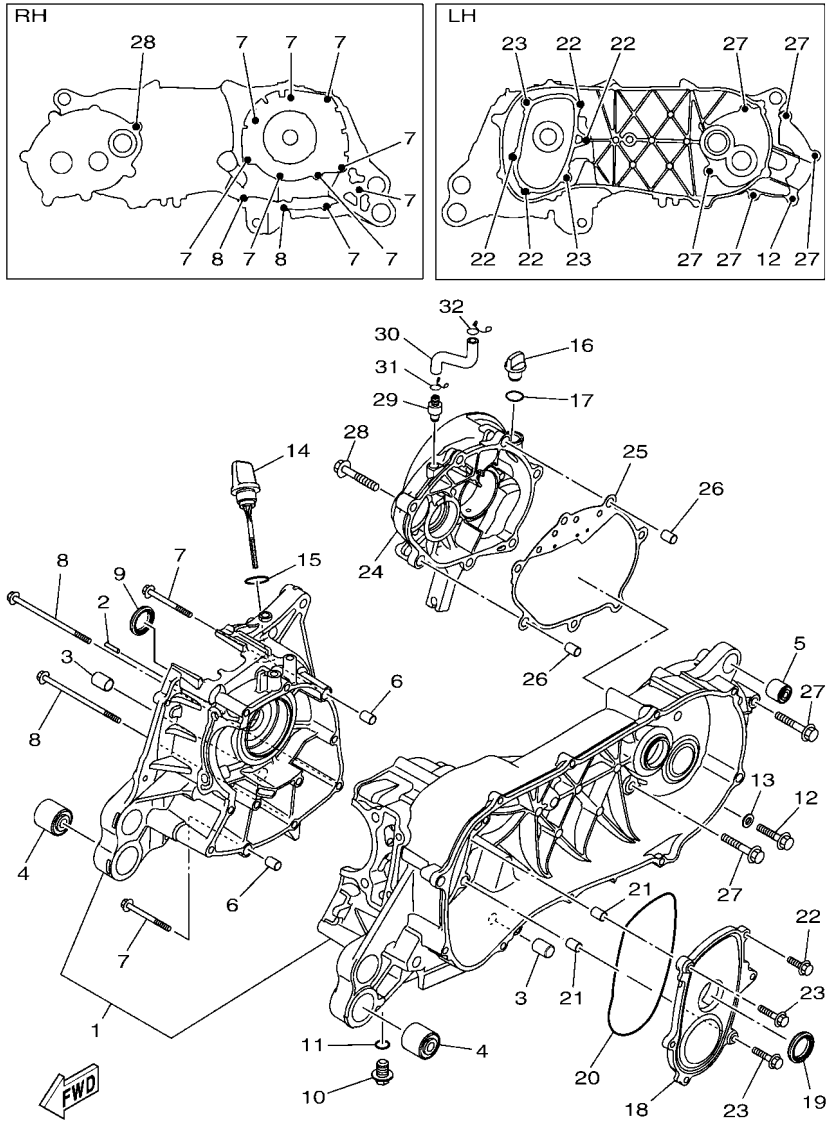

FIG. 10 CRANKCASE

REF. NO.	PART NO.	DESCRIPTION	BDL1	BDL2	BDL4			REMARKS
1	B6H–E5150–00	CRANKCASE ASSY	1	1	1			
2	99480–03012	PIN	1	1	1			
3	54P–F7121–00	BUSH	2	2	2			
4	90388–10808	DAMPER	2	2	2			
5	5MX–F2216–00	BUSH, REAR SHOCK ABSORBER	1	1	1			UR
	4D1–F2216–00	BUSH, REAR SHOCK ABSORBER	1	1	1			UR
6	99530–10114	PIN, DOWEL	2	2	2			
7	95E32–06060	BOLT, FLANGE DEEP RECESS	9	9	9			
8	95E32–06110	BOLT, FLANGE DEEP RECESS	2	2	2			
9	93102–22829	OIL SEAL	1	1	1			
10	90340–12816	PLUG, STRAIGHT SCREW	1	1	1			
11	90430–12803	GASKET	1	1	1			
12	95D32–08035	BOLT, FLANGE DEEP RECESS	1	1	1			
13	90430–08804	GASKET	1	1	1			
14	2DP–E5362–00	PLUG, OIL LEVEL	1	1	1			
15	5LW–E3769–00	O-RING	1	1	1			
16	5LW–E5363–00	PLUG, OIL	1	1	1			
17	93210–14816	O-RING	1	1	1			
18	B65–E5423–01	COVER 2	1	1	1			
19	93102–24802	OIL SEAL	1	1	1			
20	93211–28800	O-RING	1	1	1			
21	99530–10114	PIN, DOWEL	2	2	2			
22	95E32–06020	BOLT, FLANGE DEEP RECESS	4	4	4			
23	95E32–06030	BOLT, FLANGE DEEP RECESS	2	2	2			
24	BBP–E5421–00	COVER, CRANKCASE 2	1	1	1			
25	B6H–E5461–10	GASKET, CRANKCASE COVER 2	1	1	1			
26	99530–10114	PIN, DOWEL	2	2	2			

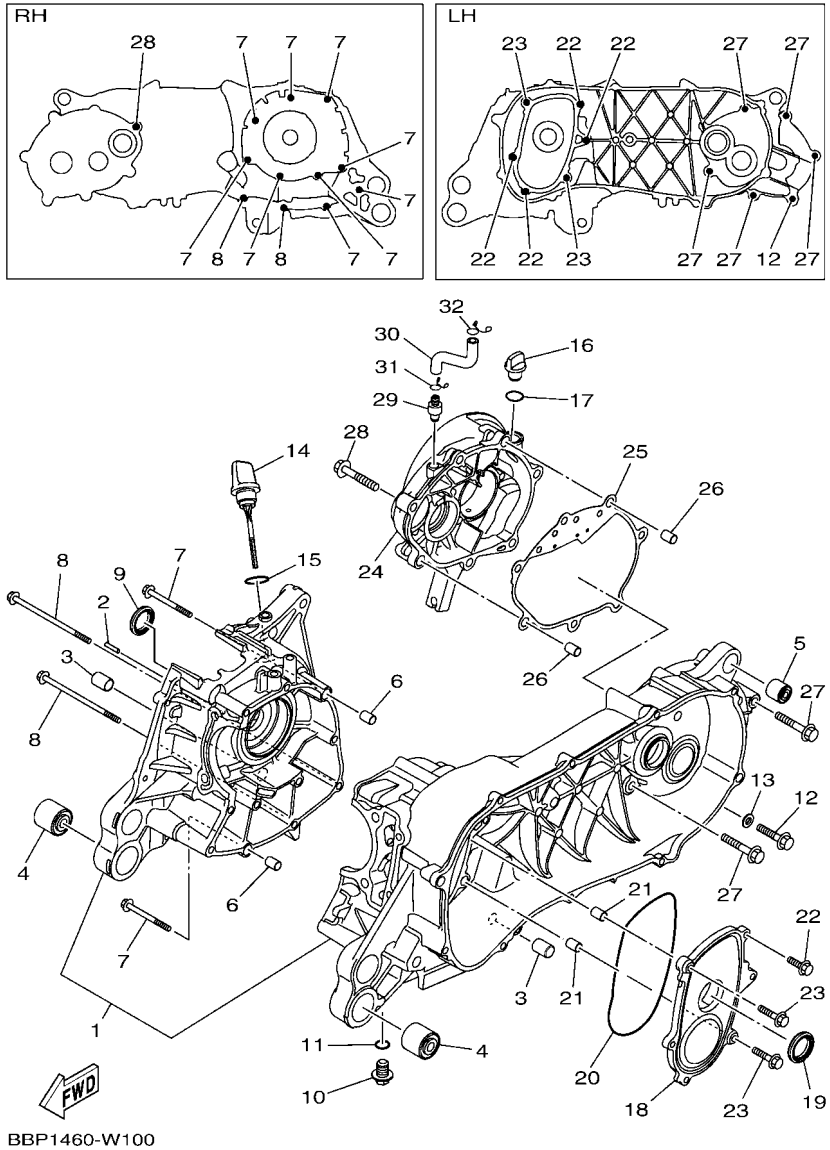

FIG. 10 CRANKCASE

REF. NO.	PART NO.	DESCRIPTION	BDL1	BDL2	BDL4			REMARKS
27	95E32–08045	BOLT, FLANGE DEEP RECESS	5	5	5			
28	95E32–08035	BOLT, FLANGE DEEP RECESS	1	1	1			
29	B6H–E5371–00	BREATHER	1	1	1			
30	B6H–E5373–00	PIPE, BREATHER	1	1	1			
31	90467–10008	CLIP	1	1	1			
32	90467–11825	CLIP	1	1	1			

FIG. 11 CRANKCASE COVER 1

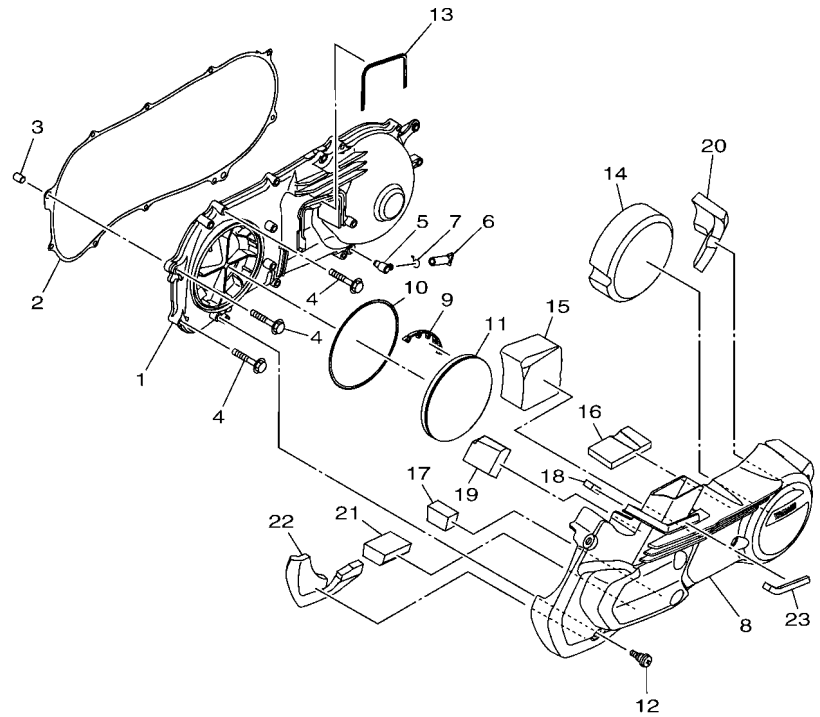

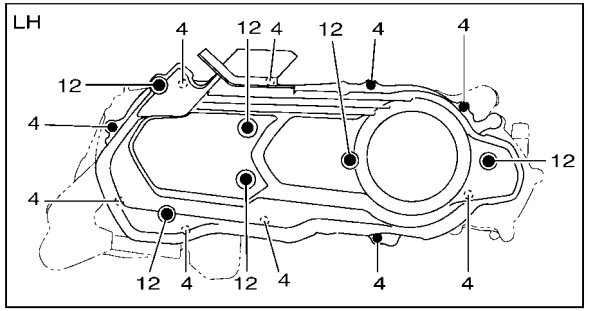

B6H1460-U110

REF. NO.	PART NO.	DESCRIPTION	BDL1	BDL2	BDL4			REMARKS
1	B6H–E5411–01	COVER, CRANKCASE 1	1	1	1			
2	B6H–E5451–00	GASKET, CRANKCASE COVER 1	1	1	1			
3	99530–10114	PIN, DOWEL	1	1	1			
4	95E32–06035	BOLT, FLANGE DEEP RECESS	10	10	10			
5	5LW–E5371–01	BREATHER	1	1	1			
6	BBP–E443E–00	PIPE, DRAIN	1	1	1			
7	90467–11106	CLIP	1	1	1			
8	B6H–E5431–00	COVER, CRANKCASE 3	1	1	1			
9	2DP–E5495–00	SEAL, PROTECTOR 1	1	1	1			
10	B65–E5472–00	SEAL, AIR DUCT	1	1	1			
11	2DP–E5407–00	ELEMENT 1	1	1	1			
12	B63–E5481–00	BOLT 1	6	6	6			UR
	2DP–E5481–00	BOLT 1	6	6	6			UR
13	2DP–E5474–00	SEAL, AIR DUCT	1	1	1			
14	B6H–E5316–00	DAMPER 1	1	1	1			
15	B6H–E5326–00	DAMPER 2	1	1	1			
16	90520–10856	DAMPER, PLATE	1	1	1			
17	90520–40801	DAMPER, PLATE	1	1	1			
18	90520–10851	DAMPER, PLATE	1	1	1			
19	90520–50801	DAMPER, PLATE	1	1	1			
20	B6H–E533C–00	DAMPER 7	1	1	1			
21	90520–40800	DAMPER, PLATE	1	1	1			
22	B6H–E533E–00	DAMPER 9	1	1	1			
23	90520–10855	DAMPER, PLATE	1	1	1			

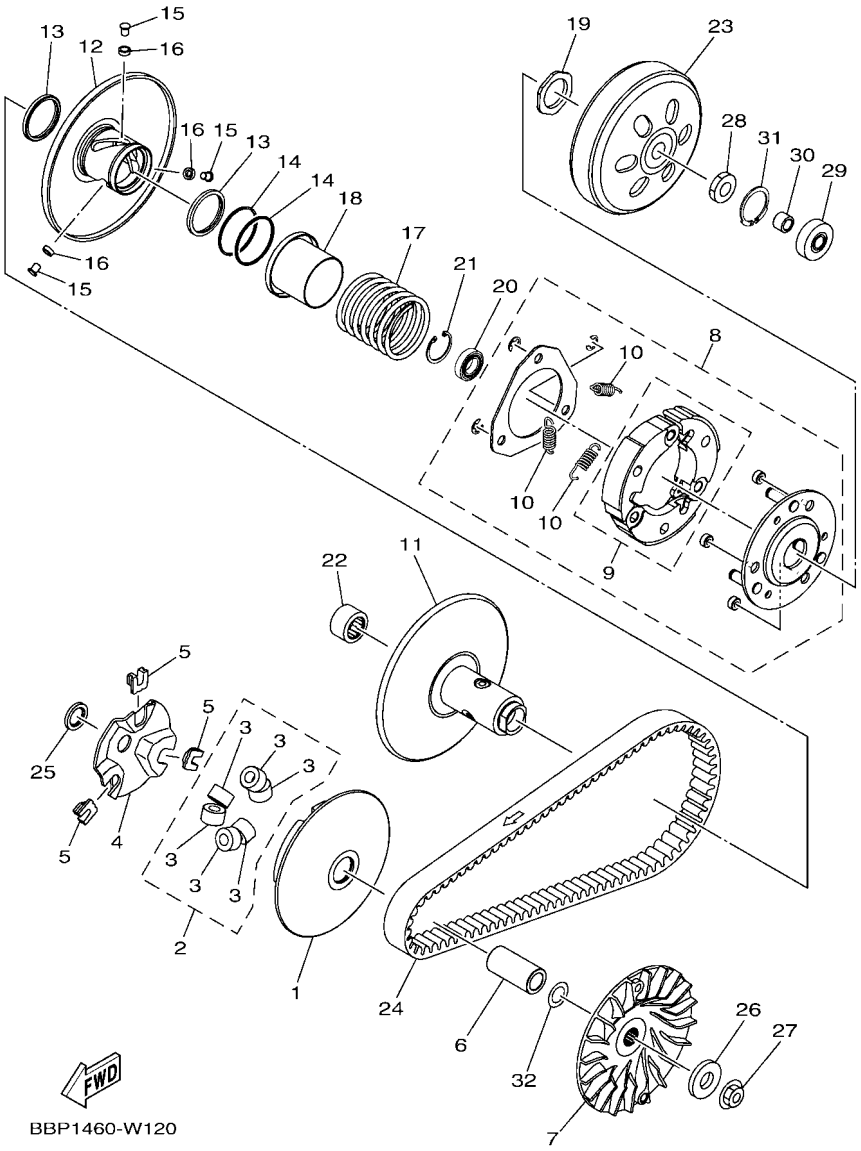

FIG. 12 CLUTCH

REF. NO.	PART NO.	DESCRIPTION	BDL1	BDL2	BDL4			REMARKS
1	B65–E7620–00	PRIMARY SLIDING SHEAVE COMP.	1	1	1			
2	B65–WE763–00	WEIGHT SET	1	1	1			
3	B65–E7632–00	.WEIGHT	6	6	6			
4	2DP–E7623–00	CAM	1	1	1			
5	44D–E7653–00	SLIDER	3	3	3			
6	B6H–E7674–00	COLLAR, GUIDE	1	1	1			
7	2DP–E7611–00	SHEAVE, PRIMARY FIXED	1	1	1			
8	B6H–E6620–00	CLUTCH CARRIER ASSY	1	1	1			
9	B65–WE662–00	.CLUTCH WEIGHT SHOE SET	1	1	1			
10	B65–E6626–00	.SPRING, CLUTCH WEIGHT 1	3	3	3			
11	B6H–E7660–00	SECONDARY FIXED SHEAVE COMP.	1	1	1			
12	B6H–E7670–00	SECONDARY SLIDING SHEAVE	1	1	1			
13	2DP–E7465–00	SEAL	2	2	2			
14	2DP–E7465–10	SEAL	2	2	2			
15	B74–E7664–00	PIN, GUIDE	3	3	3			
16	2DP–E7674–10	COLLAR, GUIDE	3	3	3			
17	B65–E7683–00	SPRING, SECONDARY	1	1	1			
18	2DP–E7684–00	SEAT, SECONDARY SPRING	1	1	1			
19	2DP–E7668–00	NUT	1	1	1			
20	B6H–E7678–00	BEARING	1	1	1			
21	2DP–E5744–00	CIRCLIP	1	1	1			
22	2DP–E7678–10	BEARING	1	1	1			
23	B65–E6611–00	CLUTCH HOUSING COMP.	1	1	1			
24	B8R–E7641–00	V-BELT	1	1	1			
25	90201–16819	WASHER, PLATE	1	1	1			
26	90201–15849	WASHER, PLATE	1	1	1			
27	90179–12004	NUT	1	1	1			

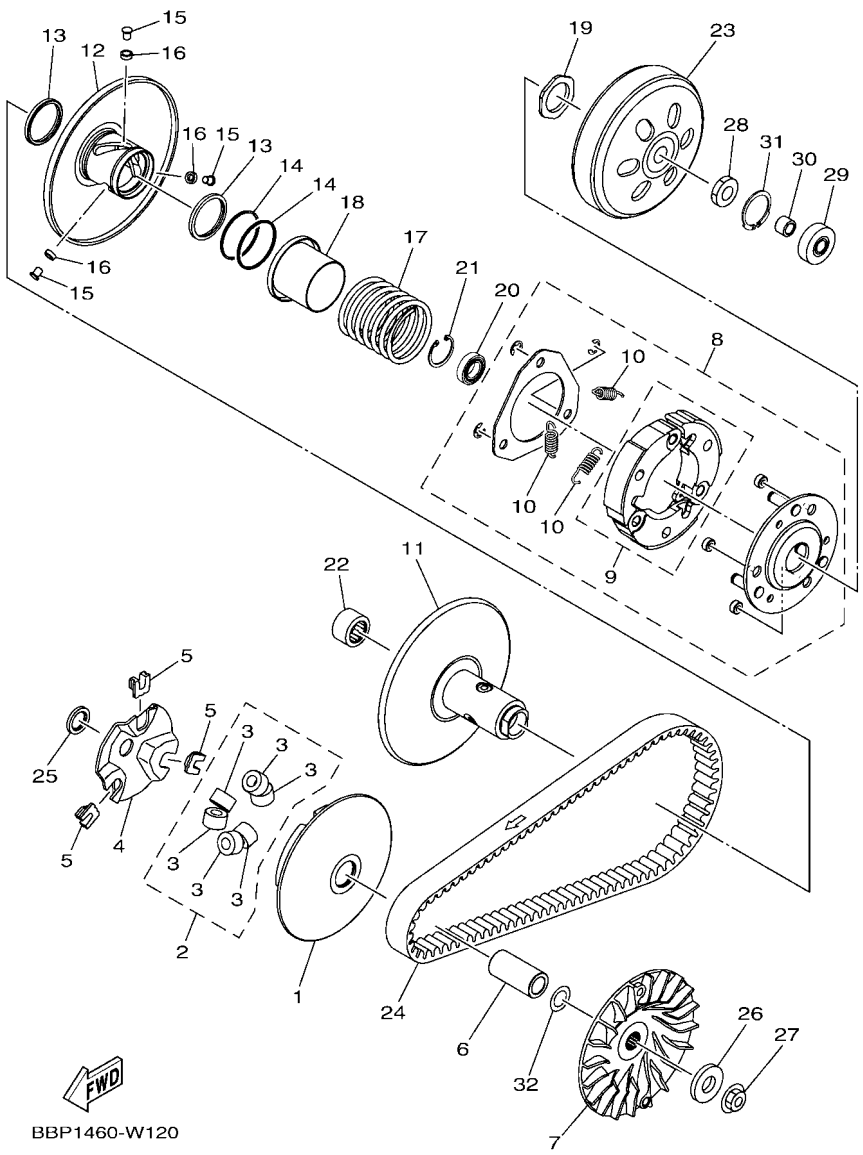

FIG. 12 CLUTCH

REF. NO.	PART NO.	DESCRIPTION	BDL1	BDL2	BDL4			REMARKS
28	90170–12802	NUT	1	1	1			
29	93306–252XT	BEARING	1	1	1			
30	90380–10800	BUSH, SOLID	1	1	1			
31	99009–35700	CIRCLIP	1	1	1			
32	90201–15828	WASHER, PLATE	1	1	1			

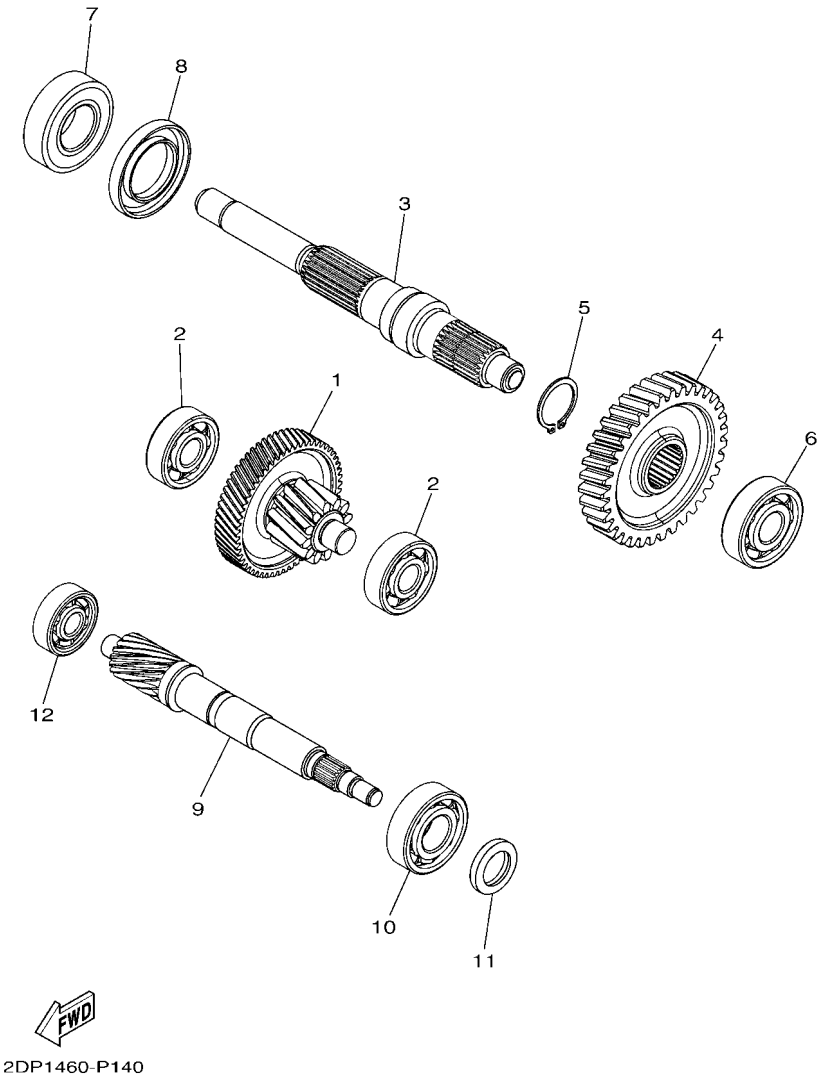

FIG. 13 TRANSMISSION

REF. NO.	PART NO.	DESCRIPTION	BDL1	BDL2	BDL4			REMARKS
1	B65–E7410–00	MAIN AXLE COMP. (13T/56T)	1	1	1			UR
	B65–E7410–30	MAIN AXLE COMP. (13T/56T)	1	1	1			UR
2	93306–302YP	BEARING	2	2	2			
3	B65–E7421–00	AXLE, DRIVE	1	1	1			
4	B65–E7211–00	GEAR, 1ST WHEEL (40T)	1	1	1			
5	99009–25400	CIRCLIP	1	1	1			
6	93306–303YT	BEARING	1	1	1			
7	93306–255X5	BEARING	1	1	1			
8	93102–32807	OIL SEAL	1	1	1			
9	B65–E6111–01	GEAR, PRIMARY DRIVE (16T)	1	1	1			
10	93306–254Y2	BEARING	1	1	1			
11	93102–20815	OIL SEAL	1	1	1			
12	93306–351Y5	BEARING	1	1	1			

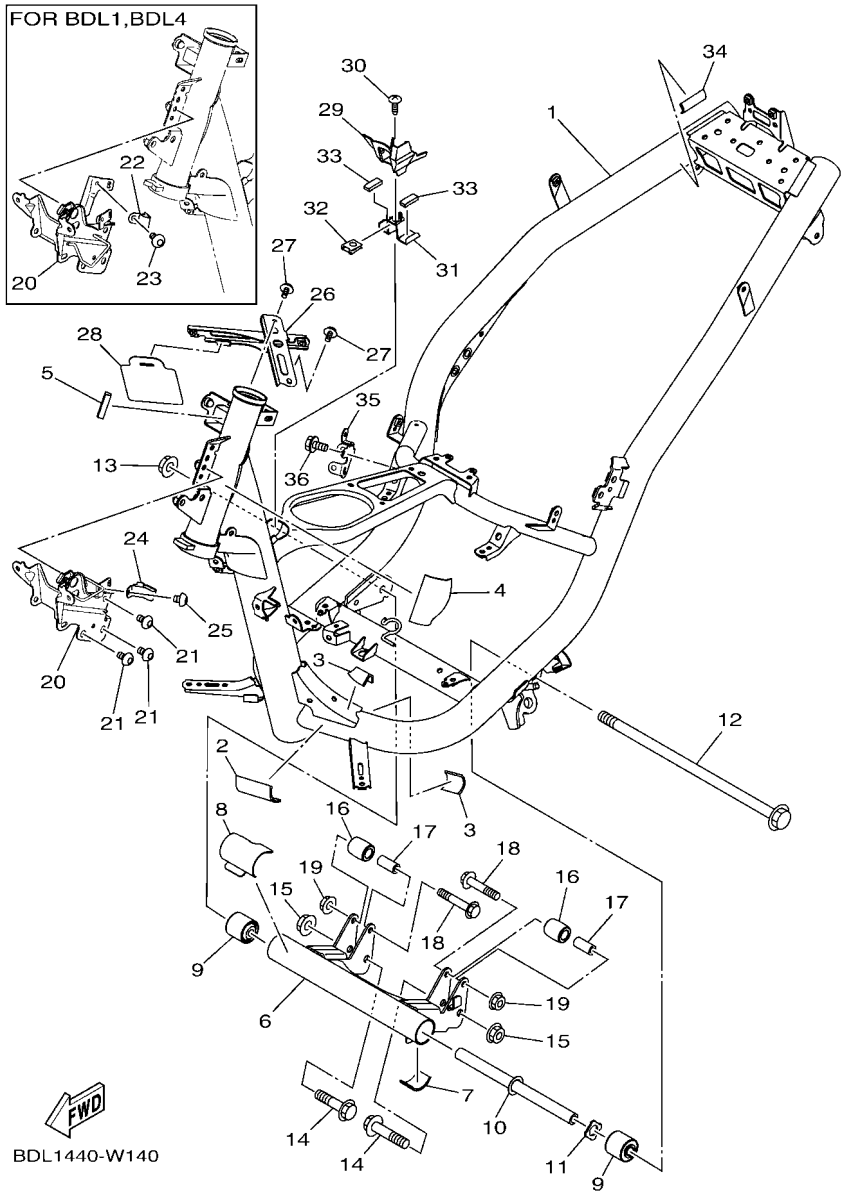

FIG. 14 FRAME

REF. NO.	PART NO.	DESCRIPTION	BDL1	BDL2	BDL4			REMARKS
1	BBP–F1110–00	FRAME COMP.	1	1	1			
2	5D9–F414G–00	SEAL	1	1	1			
3	5D9–F414G–10	SEAL	2	2	2			
4	90520–02829	DAMPER, PLATE	1	1	1			
5	90520–08803	DAMPER, PLATE	1	1	1			
6	BBP–F1410–00	ENGINE BRACKET COMP.	1	1	1			
7	BBP–F414G–00	SEAL	1	1	1			
8	B65–F117G–00	PROTECTOR	1	1	1			
9	90388–10818	DAMPER	2	2	2			
10	90387–10857	COLLAR	1	1	1			
11	B65–F113B–00	DAMPER	1	1	1			
12	B65–F2141–00	SHAFT, PIVOT	1	1	1			
13	95602–10200	NUT, S/L FLANGE	1	1	1			
14	90105–10283	BOLT, FLANGE	2	2	2			
15	95602–10200	NUT, S/L FLANGE	2	2	2			
16	44D–F7114–00	STOPPER, MAIN STAND	2	2	2			
17	90387–08821	COLLAR	2	2	2			
18	90105–088E3	BOLT, FLANGE	2	2	2			
19	95602–08200	NUT, U FLANGE	2	2	2			
20	BBP–F8356–10	STAY 1	1		1			
	BBP–F8356–00	STAY 1		1				
21	92012–08012	BOLT, BUTTON HEAD	3	3	3			
22	B65–F5887–00	HOLDER, BRAKE HOSE 3	1		1			
23	92012–06010	BOLT, BUTTON HEAD	1		1			
24	B65–F587A–10	HOLDER, BRAKE HOSE 4	1	1	1			
25	92012–06010	BOLT, BUTTON HEAD	1	1	1			
26	B65–F8358–10	STAY 3	1	1	1			

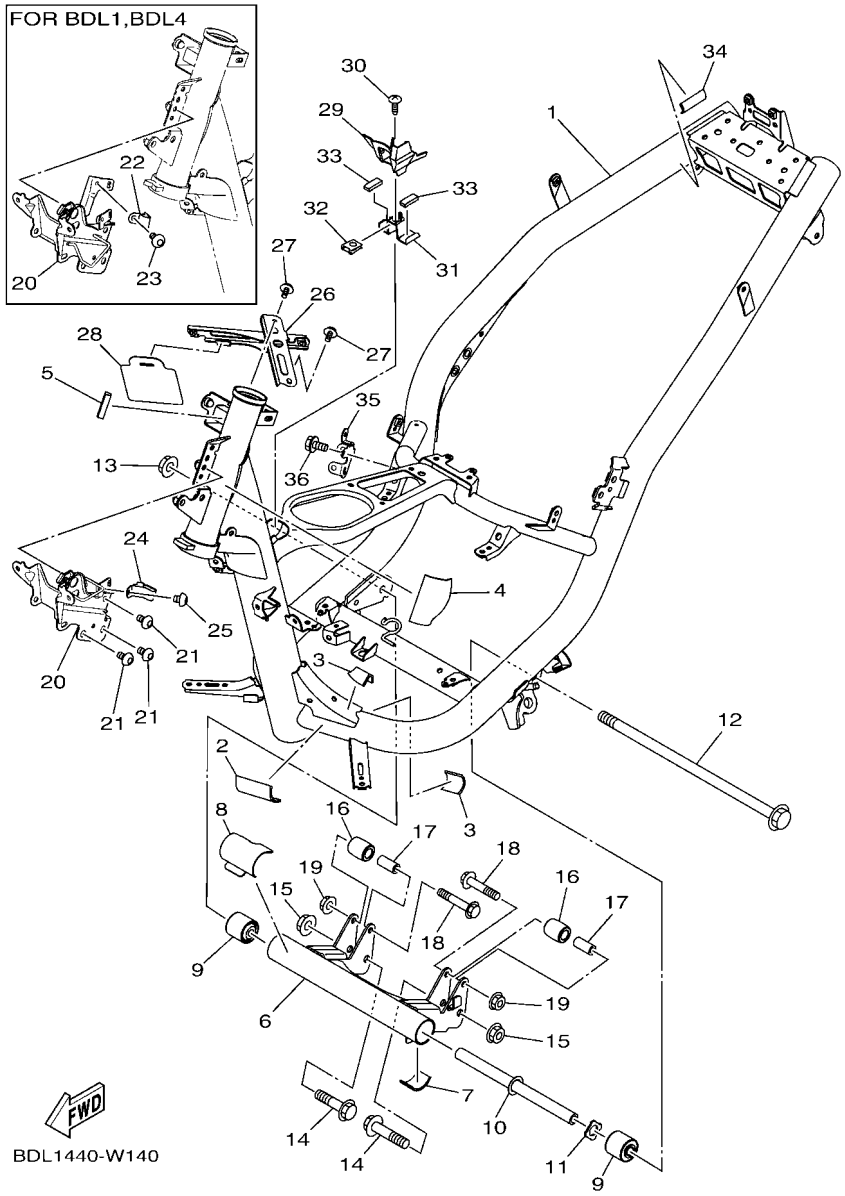

FIG. 14 FRAME

REF. NO.	PART NO.	DESCRIPTION	BDL1	BDL2	BDL4			REMARKS
27	95D32–06010	BOLT, FLANGE DEEP RECESS	2	2	2			
28	B65–F1521–00	FLAP, FRONT FENDER	1	1	1			
29	B65–F472T–00	COVER, SEAT LOCK	1	1	1			
30	97707–50016	SCREW, TRUSS HEAD TAPPING	1	1	1			
31	B65–F4738–00	BRACKET, SEAT	1	1	1			
32	90183–05807	NUT, SPRING	1	1	1			
33	90520–05815	DAMPER, PLATE	2	2	2			
34	90520–10834	DAMPER, PLATE	1	1	1			
35	BBP–F194U–00	STAY, IGNITION COIL	1	1	1			
36	95E32–06012	BOLT, FLANGE DEEP RECESS	1	1	1			

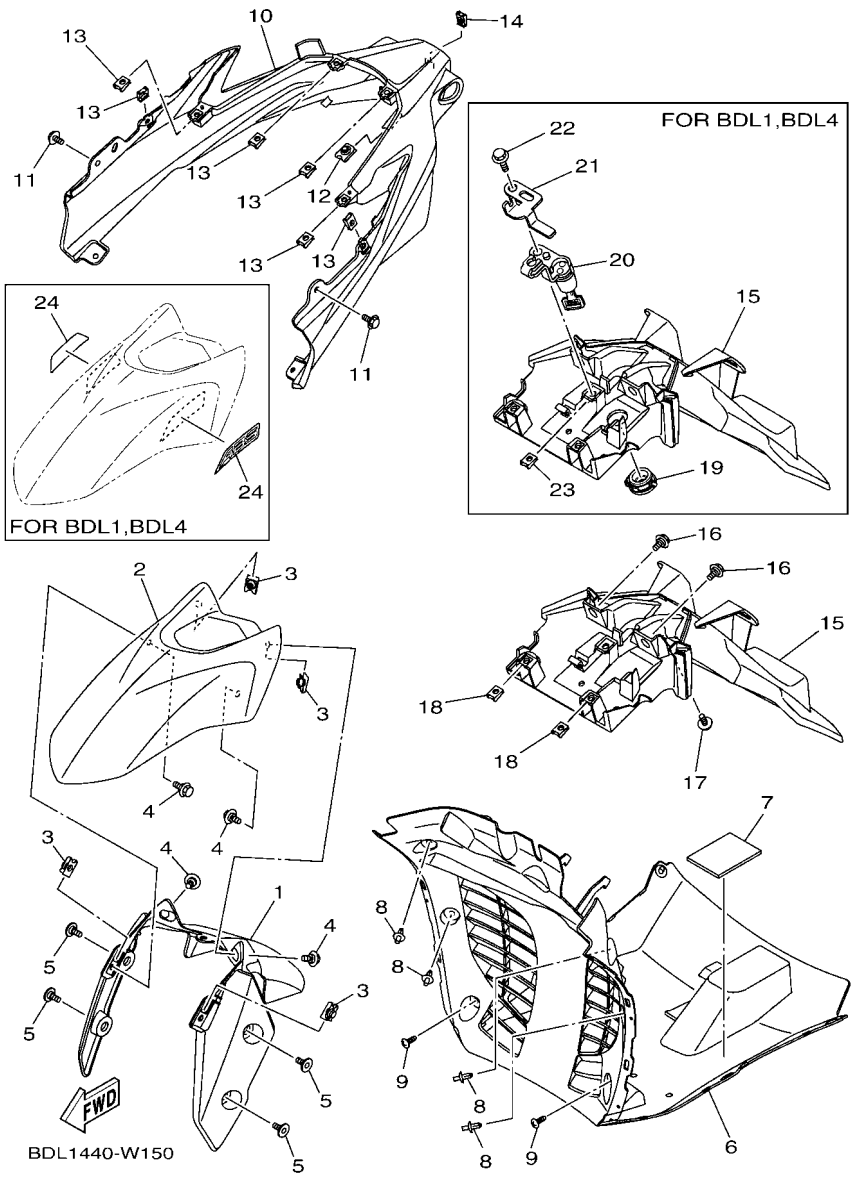

FIG. 15 FENDER

REF. NO.	PART NO.	DESCRIPTION	BDL1	BDL2	BDL4			REMARKS
1	B65–F1511–00	FENDER, FRONT	1	1	1			
2	B65–F1556–00–PF	FENDER, FRONT 2	1					WMB
	B65–F1556–00–PH	FENDER, FRONT 2		1				UR FOR RM7
	B65–F1556–00–PJ	FENDER, FRONT 2		1				UR FOR CM6
	B65–F1556–00–PG	FENDER, FRONT 2			1			MBNM3 FOR DPBMC
3	90183–06818	NUT, SPRING	4	4	4			
4	90109–068B5	BOLT	4	4	4			
5	90109–068A4	BOLT	4	4	4			
6	BBP–F1552–00	FENDER, INNER	1	1	1			
7	90520–03020	DAMPER, PLATE	1	1	1			
8	90269–06816	RIVET	4	4	4			
9	97707–50016	SCREW, TRUSS HEAD TAPPING	2	2	2			
10	BBP–F1611–00	FENDER, REAR	1	1	1			
11	90119–06044	BOLT, WITH WASHER	2	2	2			
12	90183–06800	NUT, SPRING	1	1	1			
13	90183–05807	NUT, SPRING	6	6	6			
14	90183–04039	NUT, SPRING	1	1	1			
15	BBP–F162R–10	FENDER 2	1		1			
	BBP–F162R–00	FENDER 2		1				
16	90109–06172	BOLT	2	2	2			
17	90119–06096	BOLT, WITH WASHER	1	1	1			
18	90183–05807	NUT, SPRING	2	2	2			
19	B65–F482H–00	CAP	1		1			
20	B65–F465E–00	ROTOR COMP.	1		1			
21	B65–F117K–00	STAY, LOCK	1		1			
22	95022–06020	BOLT, FLANGE	1		1			
23	90183–06800	NUT, SPRING	1		1			

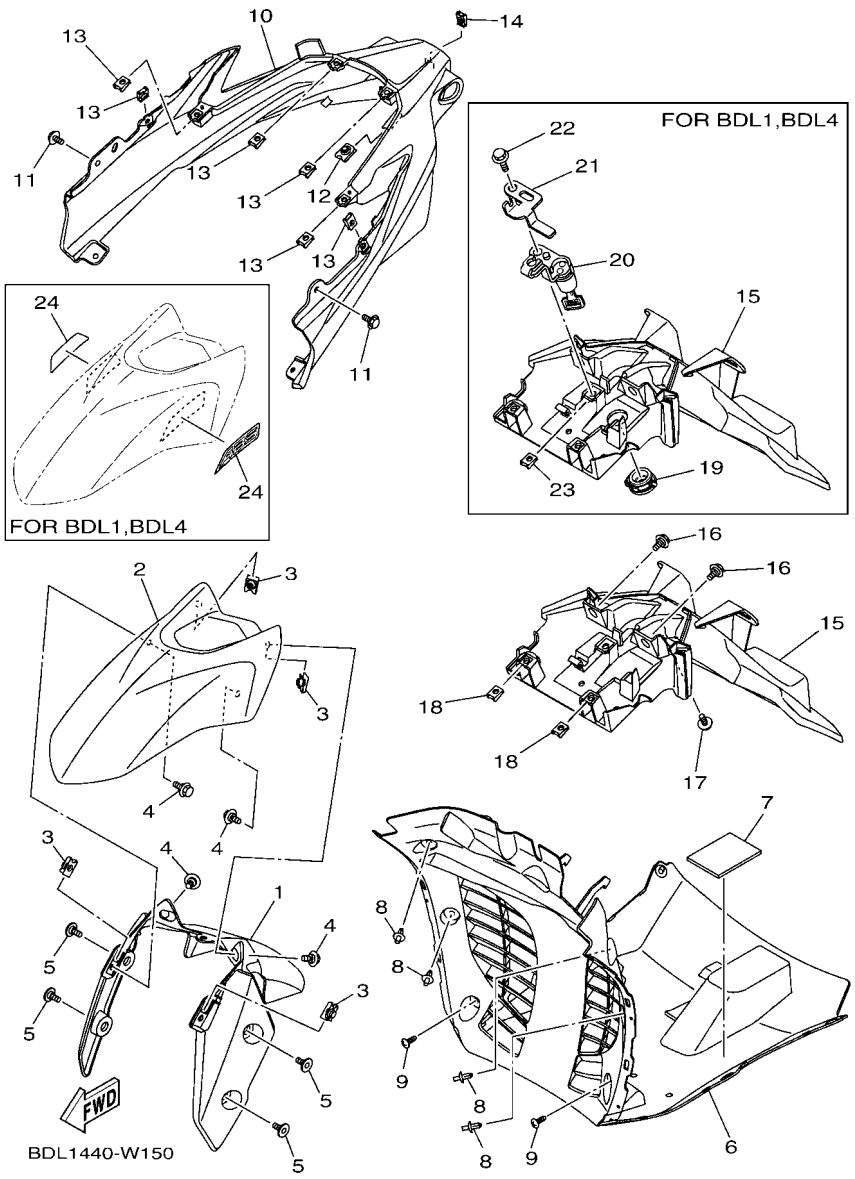

FIG. 15 FENDER

REF. NO.	PART NO.	DESCRIPTION	BDL1	BDL2	BDL4			REMARKS
24	BDL–F1565–00	EMBLEM 2	2					
	BDL–F1565–10	EMBLEM 2			2			

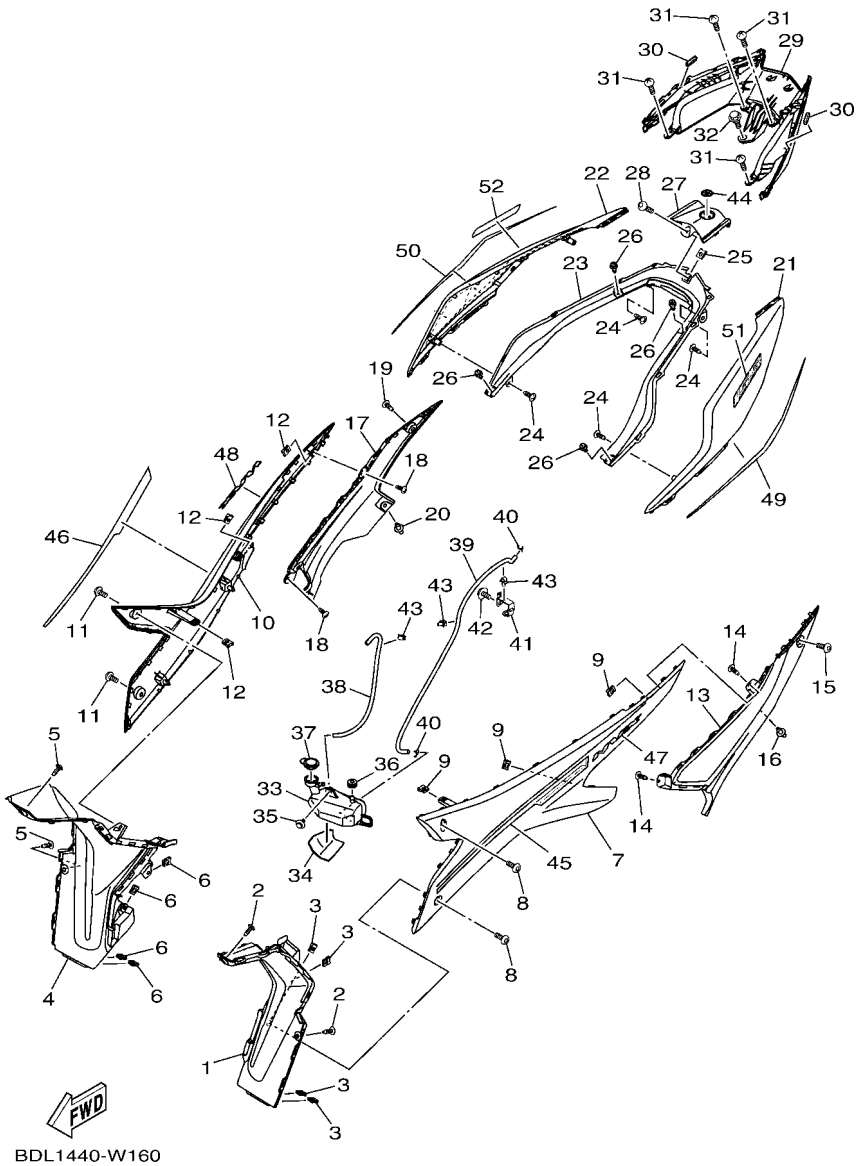

FIG. 16 SIDE COVER

REF. NO.	PART NO.	DESCRIPTION	BDL1	BDL2	BDL4			REMARKS
1	BBP–F1711–00	COVER, SIDE 1	1					
2	90160–05814	SCREW, ROUND TAPPING	2					
3	90183–05807	NUT, SPRING	4					
4	BBP–F1721–00	COVER, SIDE 2	1					
5	90160–05814	SCREW, ROUND TAPPING	2					
6	90183–05807	NUT, SPRING	4					
7	BBP–F1731–00–P0	COVER, SIDE 3	1					MBL2 FOR WMB
8	90160–05814	SCREW, ROUND TAPPING	2					
9	90183–05807	NUT, SPRING	3					
10	BBP–F1741–00–P0	COVER, SIDE 4	1					MBL2 FOR WMB
11	90160–05814	SCREW, ROUND TAPPING	2					
12	90183–05807	NUT, SPRING	3					
13	BBP–F171N–00	MOLE, SIDE COVER 3	1					
14	97702–50012	SCREW, TAPPING	2					
15	90160–05814	SCREW, ROUND TAPPING	1					
16	90269–06816	RIVET	1					
17	BBP–F171R–00	MOLE, SIDE COVER 4	1					
18	97702–50012	SCREW, TAPPING	2					
19	90160–05814	SCREW, ROUND TAPPING	1					
20	90269–06816	RIVET	1					
21	BBP–F171E–00–P5	COVER, SIDE 5	1					WMB
22	BBP–F171X–00–P5	COVER, SIDE 6	1					WMB
23	BBP–F171T–00	MOLE, SIDE COVER 5	1					
24	97707–50016	SCREW, TRUSS HEAD TAPPING	4					
25	90183–05807	NUT, SPRING	1					
26	90269–06812	RIVET	4					
27	BBP–F471K–00–P5	COVER, TAIL 1	1					WMB

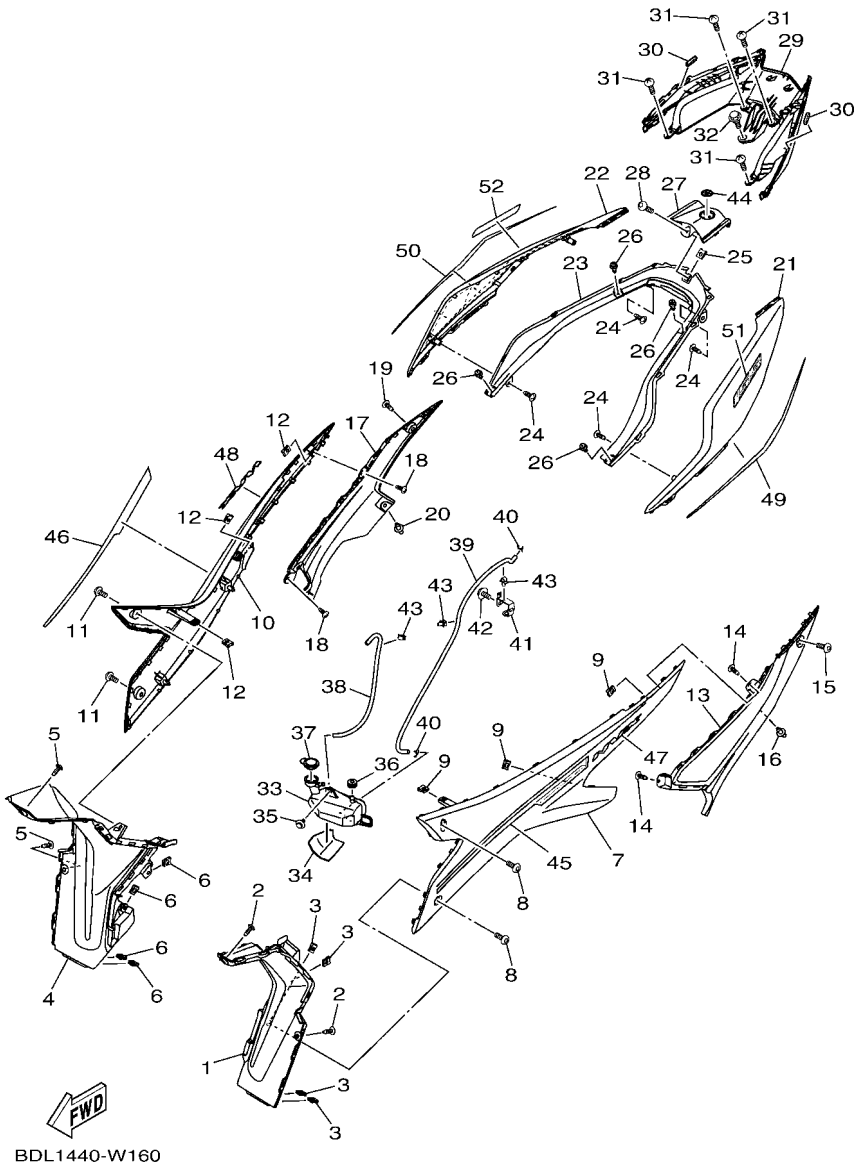

FIG. 16 SIDE COVER

REF. NO.	PART NO.	DESCRIPTION	BDL1	BDL2	BDL4			REMARKS
28	90160–05814	SCREW, ROUND TAPPING	1					
29	BBP–F472K–00	COVER, TAIL 2	1					
30	90520–10850	DAMPER, PLATE	2					
31	97707–50016	SCREW, TRUSS HEAD TAPPING	4					
32	90109–068B5	BOLT	1					
33	B65–F1871–00	TANK, RECOVERY	1					
34	90520–02829	DAMPER, PLATE	1					
35	90109–068B5	BOLT	1					
36	90480–14808	GROMMET	1					
37	1S7–F1875–01	CAP	1					
38	B65–F1816–00	PIPE 1	1					
39	BBP–F1817–00	PIPE 2	1					
40	90467–08003	CLIP	2					
41	BBR–F2957–00	BRACKET, HOSE	1					
42	95D02–06012	BOLT, FLANGE DEEP RECESS	1					
43	90464–07805	CLAMP	3					
44	5P2–F1737–00	EMBLEM	1					
45	BDL–F173E–00	GRAPHIC 1	1					
46	BDL–F173F–00	GRAPHIC 2	1					
47	BBN–F173B–00	EMBLEM 3D	1					
48	BBN–F173B–00	EMBLEM 3D	1					
49	BDL–F174G–00	GRAPHIC 3	1					
50	BDL–F174H–00	GRAPHIC 4	1					
51	BDL–F1781–00	EMBLEM 1	1					
52	BDL–F1781–00	EMBLEM 1	1					

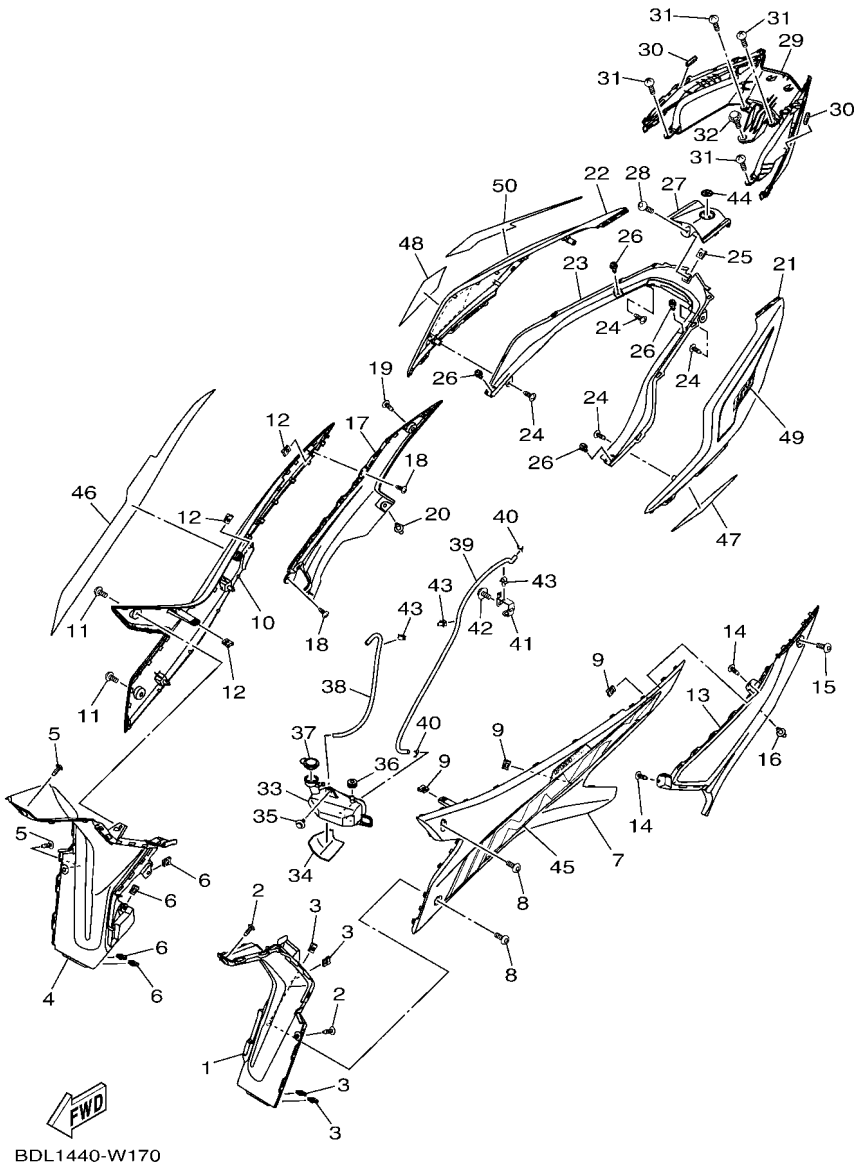

FIG. 17 SIDE COVER 2

REF. NO.	PART NO.	DESCRIPTION	BDL1	BDL2	BDL4			REMARKS
1	BBP–F1711–00	COVER, SIDE 1		1				
2	90160–05814	SCREW, ROUND TAPPING		2				
3	90183–05807	NUT, SPRING		4				
4	BBP–F1721–00	COVER, SIDE 2		1				
5	90160–05814	SCREW, ROUND TAPPING		2				
6	90183–05807	NUT, SPRING		4				
7	BBP–F1731–00–P0	COVER, SIDE 3		1				MBL2 FOR CM6
	BBP–F1731–00–P1	COVER, SIDE 3		1				MNM3 FOR RM7
8	90160–05814	SCREW, ROUND TAPPING		2				
9	90183–05807	NUT, SPRING		3				
10	BBP–F1741–00–P0	COVER, SIDE 4		1				MBL2 FOR CM6
	BBP–F1741–00–P1	COVER, SIDE 4		1				MNM3 FOR RM7
11	90160–05814	SCREW, ROUND TAPPING		2				
12	90183–05807	NUT, SPRING		3				
13	BBP–F171N–00	MOLE, SIDE COVER 3		1				
14	97702–50012	SCREW, TAPPING		2				
15	90160–05814	SCREW, ROUND TAPPING		1				
16	90269–06816	RIVET		1				
17	BBP–F171R–00	MOLE, SIDE COVER 4		1				
18	97702–50012	SCREW, TAPPING		2				
19	90160–05814	SCREW, ROUND TAPPING		1				
20	90269–06816	RIVET		1				
21	BBP–F171E–00–P7	COVER, SIDE 5		1				UR FOR RM7
	BBP–F171E–00–P8	COVER, SIDE 5		1				UR FOR CM6
22	BBP–F171X–00–P7	COVER, SIDE 6		1				UR FOR RM7
	BBP–F171X–00–P8	COVER, SIDE 6		1				UR FOR CM6
23	BBP–F171T–00	MOLE, SIDE COVER 5		1				

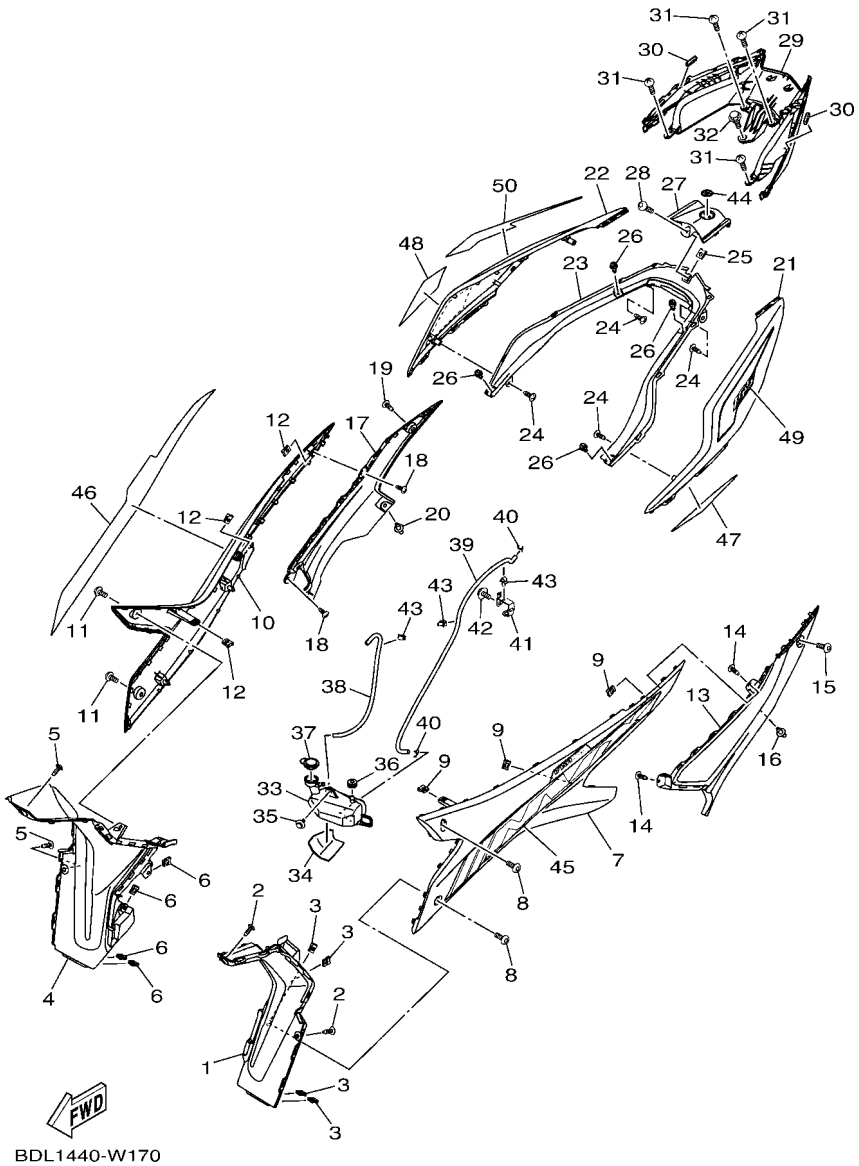

FIG. 17 SIDE COVER 2

REF. NO.	PART NO.	DESCRIPTION	BDL1	BDL2	BDL4			REMARKS
24	97707–50016	SCREW, TRUSS HEAD TAPPING		4				
25	90183–05807	NUT, SPRING		1				
26	90269–06812	RIVET		4				
27	BBP–F471K–00–P7	COVER, TAIL 1		1				UR FOR RM7
	BBP–F471K–00–P8	COVER, TAIL 1		1				UR FOR CM6
28	90160–05814	SCREW, ROUND TAPPING		1				
29	BBP–F472K–00	COVER, TAIL 2		1				
30	90520–10850	DAMPER, PLATE		2				
31	97707–50016	SCREW, TRUSS HEAD TAPPING		4				
32	90109–068B5	BOLT		1				
33	B65–F1871–00	TANK, RECOVERY		1				
34	90520–02829	DAMPER, PLATE		1				
35	90109–068B5	BOLT		1				
36	90480–14808	GROMMET		1				
37	1S7–F1875–01	CAP		1				
38	B65–F1816–00	PIPE 1		1				
39	BBP–F1817–00	PIPE 2		1				
40	90467–08003	CLIP		2				
41	BBR–F2957–00	BRACKET, HOSE		1				
42	95D02–06012	BOLT, FLANGE DEEP RECESS		1				
43	90464–07805	CLAMP		3				
44	5P2–F1737–00	EMBLEM		1				
45	BDL–F173E–10	GRAPHIC 1		1				UR FOR RM7
	BDL–F173E–20	GRAPHIC 1		1				UR FOR CM6
46	BDL–F173F–10	GRAPHIC 2		1				UR FOR RM7
	BDL–F173F–20	GRAPHIC 2		1				UR FOR CM6
47	BDL–F174G–10	GRAPHIC 3		1				UR FOR RM7

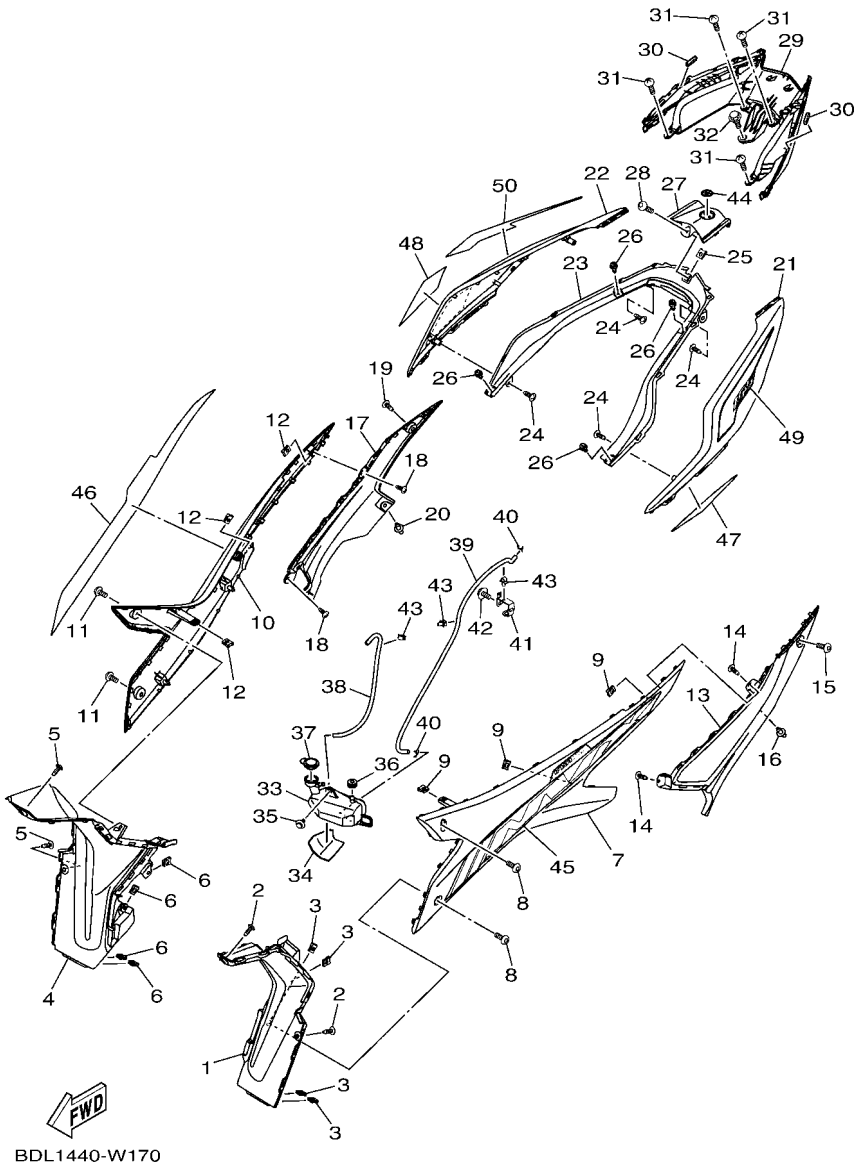

FIG. 17 SIDE COVER 2

REF. NO.	PART NO.	DESCRIPTION	BDL1	BDL2	BDL4			REMARKS
47	BDL–F174G–20	GRAPHIC 3		1				UR FOR CM6
48	BDL–F174H–10	GRAPHIC 4		1				UR FOR RM7
	BDL–F174H–20	GRAPHIC 4		1				UR FOR CM6
49	BDL–F174J–00	GRAPHIC 5		1				UR FOR RM7
	BDL–F174J–10	GRAPHIC 5		1				UR FOR CM6
50	BDL–F174K–00	GRAPHIC 6		1				UR FOR RM7
	BDL–F174K–10	GRAPHIC 6		1				UR FOR CM6

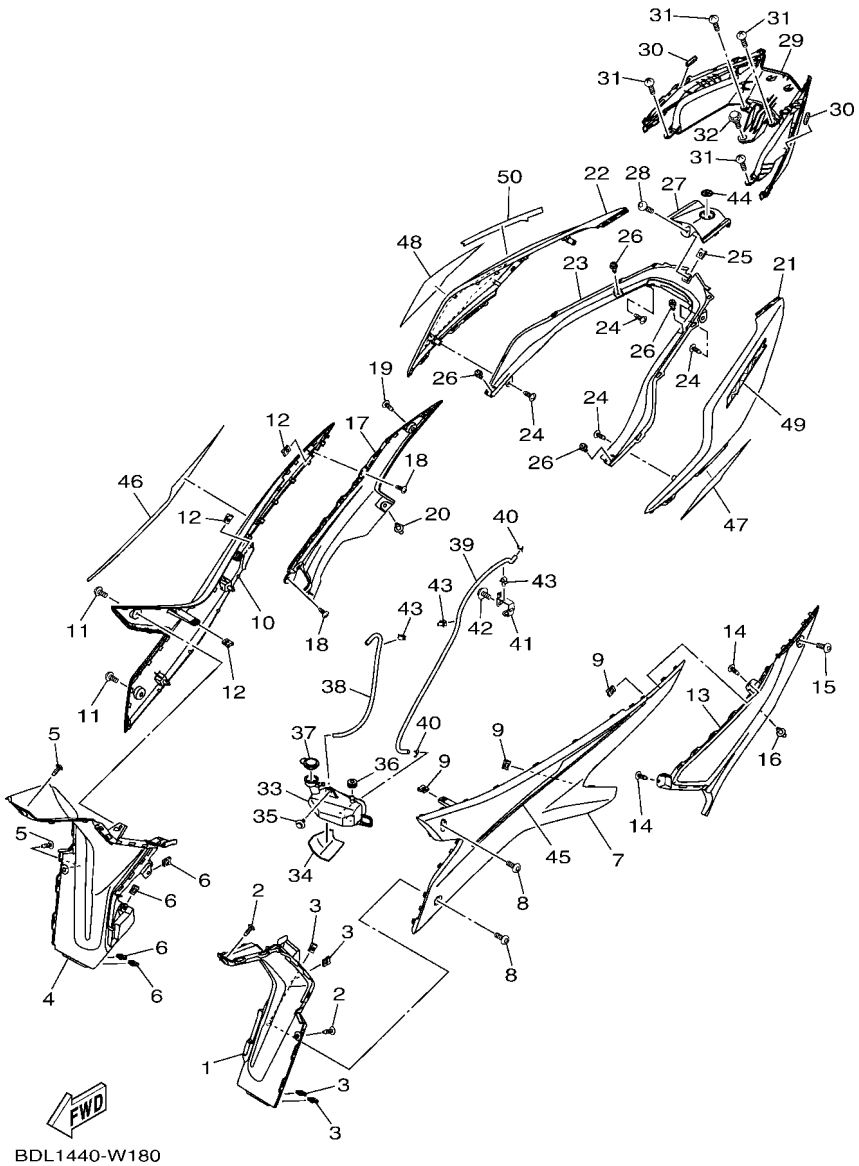

FIG. 18 SIDE COVER 3

REF. NO.	PART NO.	DESCRIPTION	BDL1	BDL2	BDL4			REMARKS
1	BBP–F1711–00	COVER, SIDE 1			1			
2	90160–05814	SCREW, ROUND TAPPING			2			
3	90183–05807	NUT, SPRING			4			
4	BBP–F1721–00	COVER, SIDE 2			1			
5	90160–05814	SCREW, ROUND TAPPING			2			
6	90183–05807	NUT, SPRING			4			
7	BBP–F1731–00–P3	COVER, SIDE 3			1			DPBMC
8	90160–05814	SCREW, ROUND TAPPING			2			
9	90183–05807	NUT, SPRING			3			
10	BBP–F1741–00–P3	COVER, SIDE 4			1			DPBMC
11	90160–05814	SCREW, ROUND TAPPING			2			
12	90183–05807	NUT, SPRING			3			
13	BBP–F171N–00	MOLE, SIDE COVER 3			1			
14	97702–50012	SCREW, TAPPING			2			
15	90160–05814	SCREW, ROUND TAPPING			1			
16	90269–06816	RIVET			1			
17	BBP–F171R–00	MOLE, SIDE COVER 4			1			
18	97702–50012	SCREW, TAPPING			2			
19	90160–05814	SCREW, ROUND TAPPING			1			
20	90269–06816	RIVET			1			
21	BBP–F171E–00–P6	COVER, SIDE 5			1			MBNM3 FOR DPBMC
22	BBP–F171X–00–P6	COVER, SIDE 6			1			MBNM3 FOR DPBMC
23	BBP–F171T–00	MOLE, SIDE COVER 5			1			
24	97707–50016	SCREW, TRUSS HEAD TAPPING			4			
25	90183–05807	NUT, SPRING			1			
26	90269–06812	RIVET			4			
27	BBP–F471K–00–P6	COVER, TAIL 1			1			MBNM3 FOR DPBMC

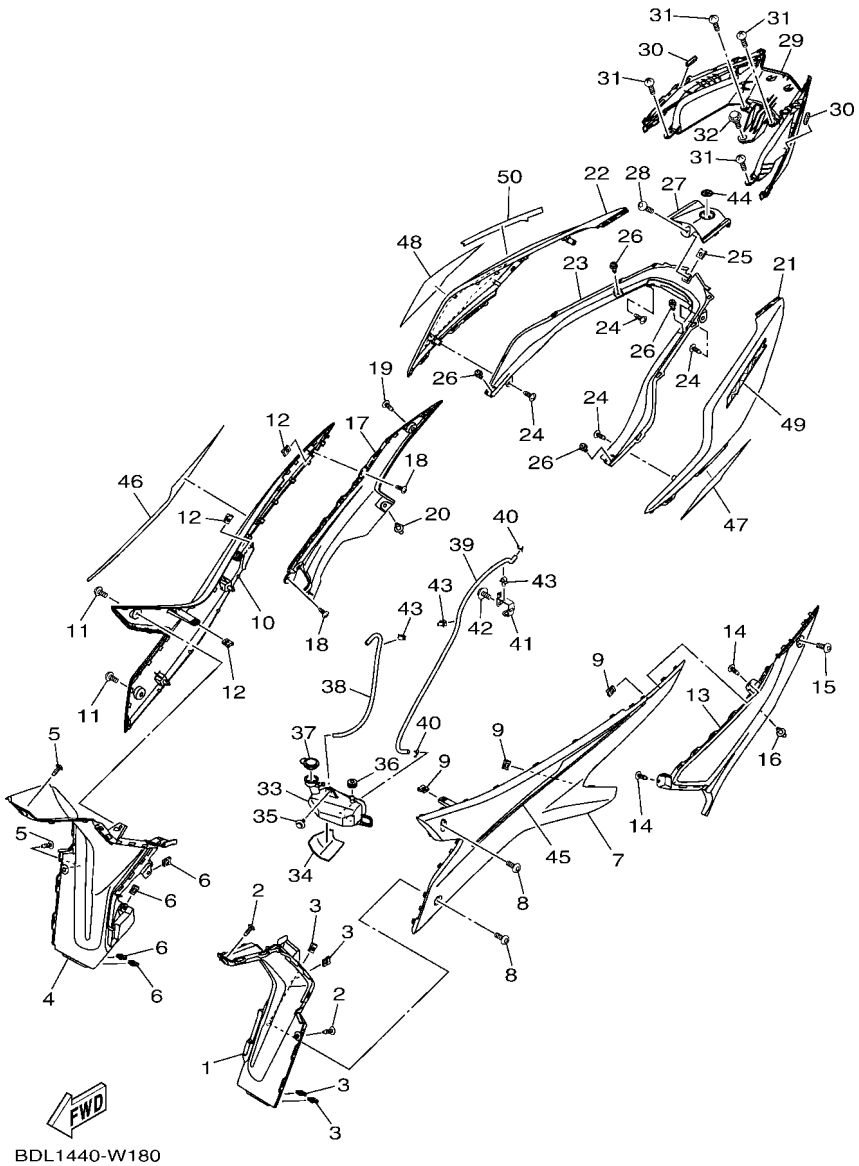

FIG. 18 SIDE COVER 3

REF. NO.	PART NO.	DESCRIPTION	BDL1	BDL2	BDL4			REMARKS
28	90160–05814	SCREW, ROUND TAPPING			1			
29	BBP–F472K–00	COVER, TAIL 2			1			
30	90520–10850	DAMPER, PLATE			2			
31	97707–50016	SCREW, TRUSS HEAD TAPPING			4			
32	90109–068B5	BOLT			1			
33	B65–F1871–00	TANK, RECOVERY			1			
34	90520–02829	DAMPER, PLATE			1			
35	90109–068B5	BOLT			1			
36	90480–14808	GROMMET			1			
37	1S7–F1875–01	CAP			1			
38	B65–F1816–00	PIPE 1			1			
39	BBP–F1817–00	PIPE 2			1			
40	90467–08003	CLIP			2			
41	BBR–F2957–00	BRACKET, HOSE			1			
42	95D02–06012	BOLT, FLANGE DEEP RECESS			1			
43	90464–07805	CLAMP			3			
44	5P2–F1737–00	EMBLEM			1			
45	BDL–F173E–30	GRAPHIC 1			1			
46	BDL–F173F–30	GRAPHIC 2			1			
47	BDL–F174G–30	GRAPHIC 3			1			
48	BDL–F174H–30	GRAPHIC 4			1			
49	BDL–F1781–10	EMBLEM 1			1			
50	BDL–F1781–10	EMBLEM 1			1			

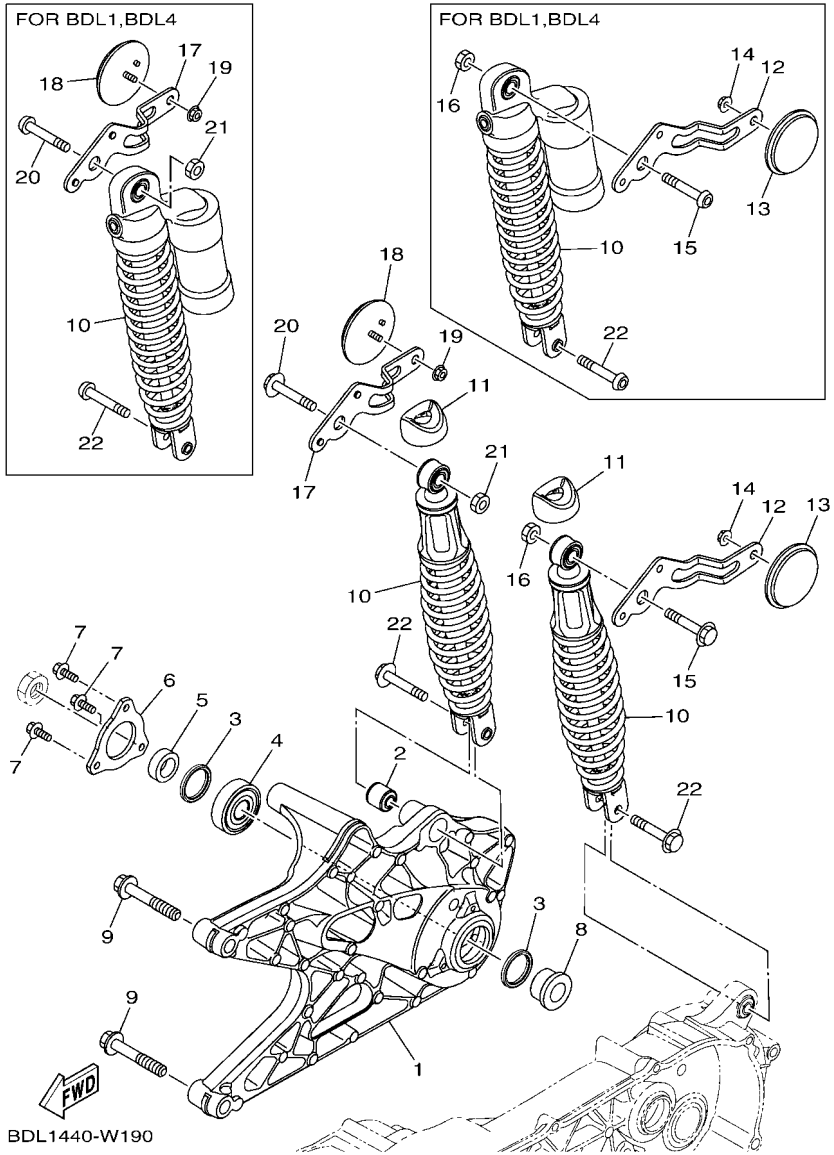

FIG. 19 REAR ARM & SUSPENSION

REF. NO.	PART NO.	DESCRIPTION	BDL1	BDL2	BDL4			REMARKS
1	BBP–F2171–00	ARM, REAR 1	1	1	1			
2	5MX–F2216–00	BUSH, REAR SHOCK ABSORBER	1	1	1			UR
	4D1–F2216–00	BUSH, REAR SHOCK ABSORBER	1	1	1			UR
3	93106–28801	OIL SEAL	2	2	2			
4	93306–303YV	BEARING	1	1	1			
5	90387–17807	COLLAR	1	1	1			
6	2DP–F2117–00	CAP	1	1	1			
7	95D37–06016	BOLT, FLANGE DEEP RECESS	3	3	3			
8	90387–17808	COLLAR	1	1	1			
9	95D32–10060	BOLT, FLANGE DEEP RECESS	2	2	2			
10	B63–F2210–31	SHOCK ABSORBER ASSY, REAR	2		2			
	B65–F2210–31	SHOCK ABSORBER ASSY, REAR		2				
11	B65–F2211–00	COVER		2				
12	BDL–F221A–00	BRACKET 1	1	1	1			
13	2FC–H5111–00	REFLECTOR, 1	1	1	1			
14	95702–05500	NUT, FLANGE	1	1	1			
15	90149–08804	SCREW	1		1			
	90105–088H0	BOLT, FLANGE		1				
16	95302–08600	NUT, HEXAGON	1	1	1			
17	BDL–F221B–00	BRACKET 2	1	1	1			
18	2FC–H5111–00	REFLECTOR, 1	1	1	1			
19	95702–05500	NUT, FLANGE	1	1	1			
20	90149–08804	SCREW	1		1			
	90105–088H0	BOLT, FLANGE		1				
21	95302–08600	NUT, HEXAGON	1	1	1			
22	90149–08804	SCREW	2		2			
	90105–088H0	BOLT, FLANGE		2				

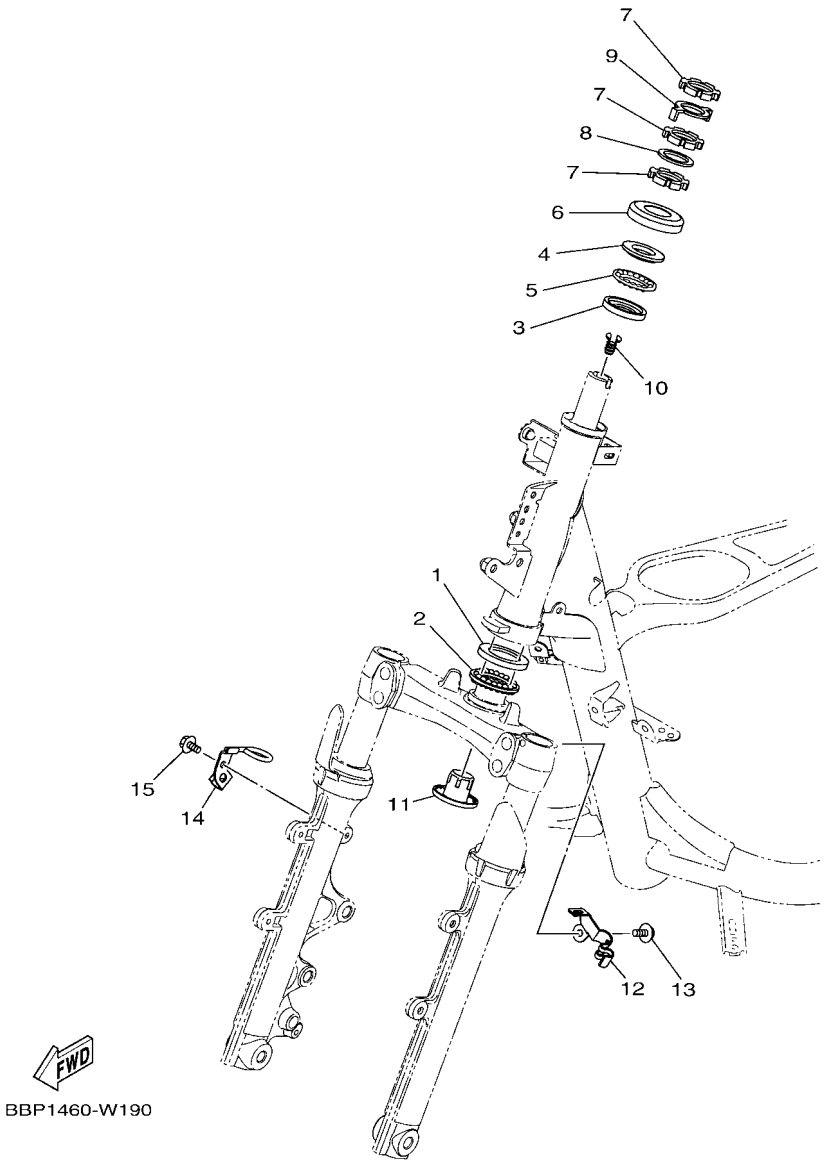

FIG. 20 STEERING

REF. NO.	PART NO.	DESCRIPTION	BDL1	BDL2	BDL4			REMARKS
1	1KL–F3412–10	RACE, BALL 2	1	1	1			
2	5VL–F341E–10	RETAINER, BALL BEARING	1	1	1			
3	4RT–F3412–10	RACE, BALL 2	1	1	1			
4	4RT–F3411–10	RACE, BALL 1	1	1	1			
5	1P6–F341E–10	RETAINER, BALL BEARING	1	1	1			
6	5TL–F3416–01	COVER, BALL RACE 2	1	1	1			
7	90179–25810	NUT	3	3	3			
8	90202–26142	WASHER, PLATE	1	1	1			
9	1PA–F3418–00	WASHER, SPECIAL	1	1	1			UR
	1SK–F3418–00	WASHER, SPECIAL	1	1	1			UR
10	B65–F312G–00	PLUG, HOLE	1	1	1			
11	B65–F3123–00	COVER, UNDER 1	1	1	1			
12	BBP–F5875–00	HOLDER, BRAKE HOSE 1	1	1	1			
13	95D02–06012	BOLT, FLANGE DEEP RECESS	1	1	1			
14	B65–F5876–00	HOLDER, BRAKE HOSE 2	1	1	1			
15	95D02–06012	BOLT, FLANGE DEEP RECESS	1	1	1			

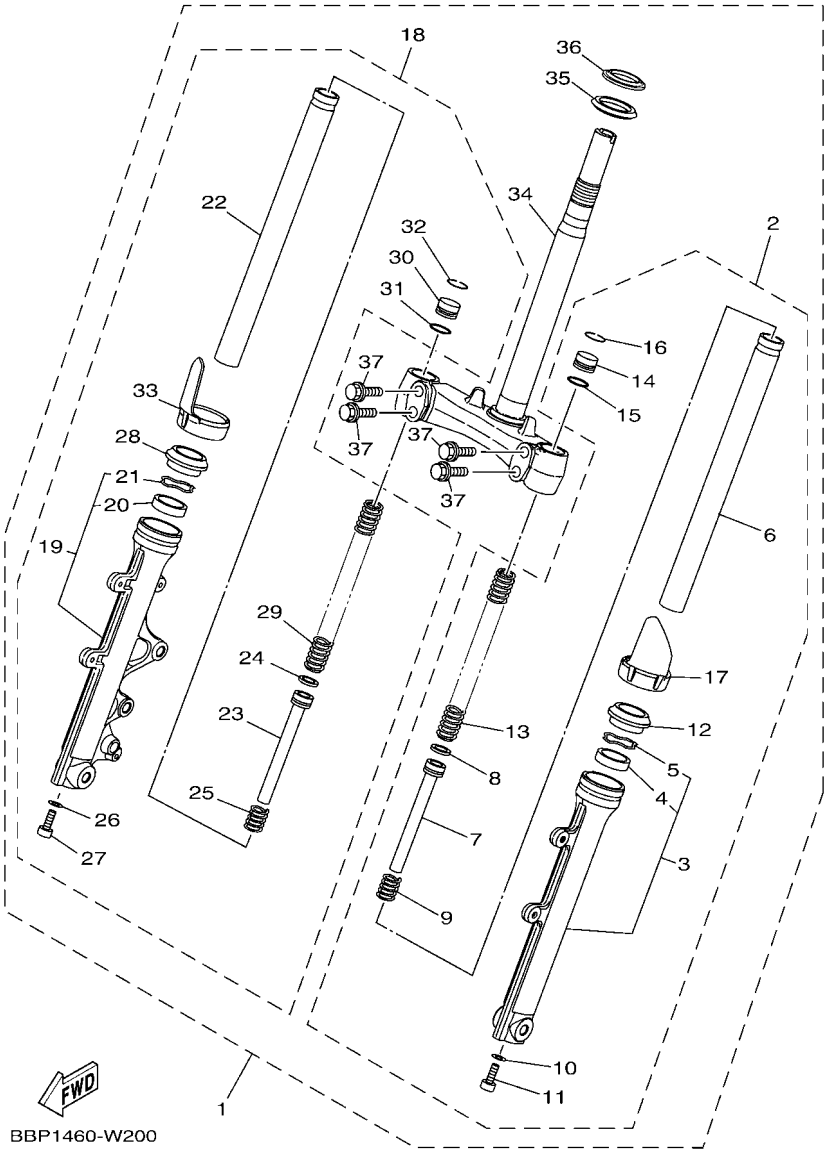

FIG. 21 FRONT FORK

REF. NO.	PART NO.	DESCRIPTION	BDL1	BDL2	BDL4			REMARKS
1	BBP–F3100–00	FRONT FORK ASSY	1	1	1			
2	BBP–F3102–00	.FRONT FORK ASSY (L.H)	1	1	1			
3	B65–F3126–00	..TUBE, OUTER (L.H)	1	1	1			
4	3AY–F3145–00	...OIL SEAL	1	1	1			
5	5P0–F3156–00	...RING, SNAP	1	1	1			
6	B65–F3110–00	..INNER TUBE COMP.1	1	1	1			
7	B65–F3170–10	..CYLINDER COMP., FRONT FORK	1	1	1			
8	2JG–F3157–00	..RING, PISTON	1	1	1			
9	5LM–F3152–00	..SPRING, SUB	1	1	1			
10	2BU–F3158–00	..GASKET	1	1	1			
11	31B–F3181–00	..BOLT, HEXAGON SOCKET HEAD	1	1	1			
12	5LM–F3144–00	..SEAL, DUST	1	1	1			
13	B63–F3141–00	..SPRING, FRONT FORK	1	1	1			
14	1FC–F3111–10	..BOLT, CAP	1	1	1			
15	2JG–F3147–00	..O-RING	1	1	1			
16	31B–F3153–00	..RING, SNAP	1	1	1			
17	B65–F315H–00	..PROTECTOR 1	1	1	1			
18	BBP–F3103–00	.FRONT FORK ASSY (R.H)	1	1	1			
19	B65–F3136–00	..TUBE, OUTER 2	1	1	1			
20	3AY–F3145–00	...OIL SEAL	1	1	1			
21	5P0–F3156–00	...RING, SNAP	1	1	1			
22	B65–F3110–00	..INNER TUBE COMP.1	1	1	1			
23	B65–F3170–10	..CYLINDER COMP., FRONT FORK	1	1	1			
24	2JG–F3157–00	..RING, PISTON	1	1	1			
25	5LM–F3152–00	..SPRING, SUB	1	1	1			
26	2BU–F3158–00	..GASKET	1	1	1			
27	31B–F3181–00	..BOLT, HEXAGON SOCKET HEAD	1	1	1			

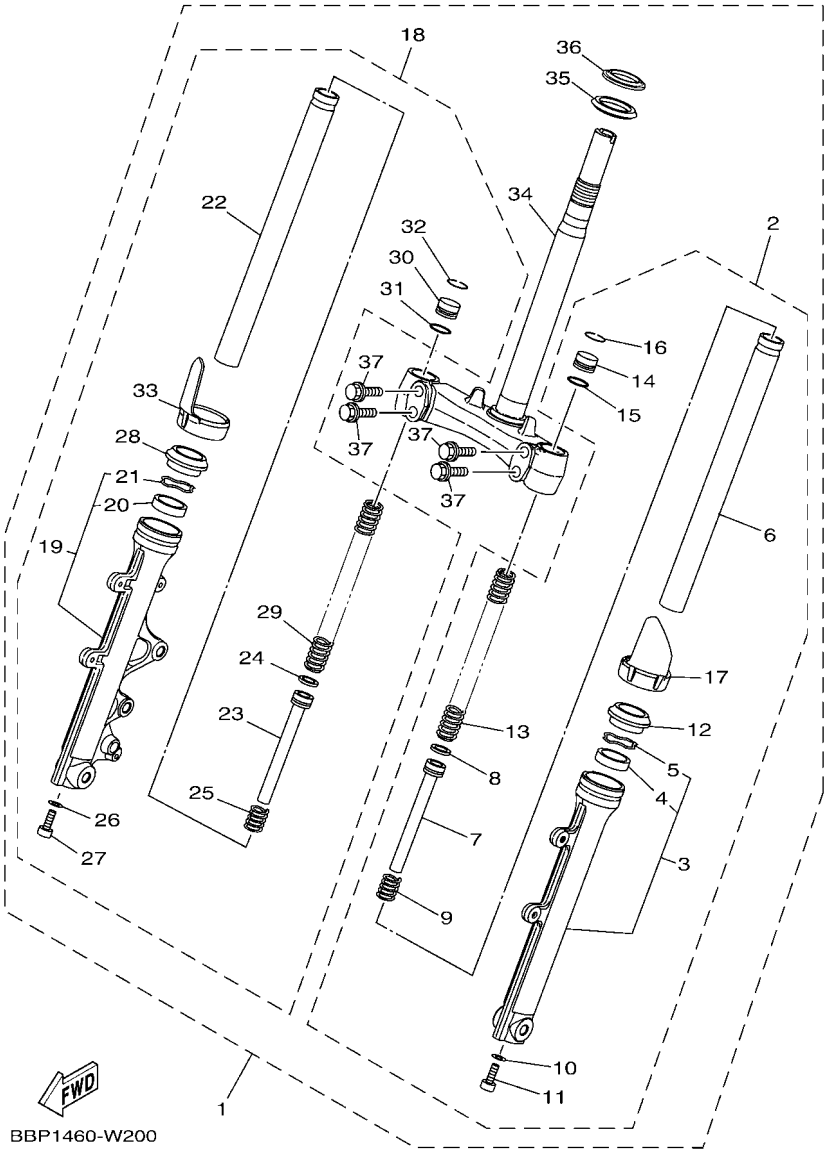

FIG. 21 FRONT FORK

REF. NO.	PART NO.	DESCRIPTION	BDL1	BDL2	BDL4			REMARKS
28	5LM–F3144–00	..SEAL, DUST	1	1	1			
29	B63–F3141–00	..SPRING, FRONT FORK	1	1	1			
30	1FC–F3111–10	..BOLT, CAP	1	1	1			
31	2JG–F3147–00	..O-RING	1	1	1			
32	31B–F3153–00	..RING, SNAP	1	1	1			
33	B65–F315J–00	..PROTECTOR 2	1	1	1			
34	BBP–F3340–00	.UNDER BRACKET COMP.	1	1	1			
35	B63–F3462–00	.SEAL, DUST	1	1	1			
36	4FP–F3411–10	.RACE, BALL 1	1	1	1			
37	4D0–F3346–00	.BOLT 1	4	4	4			

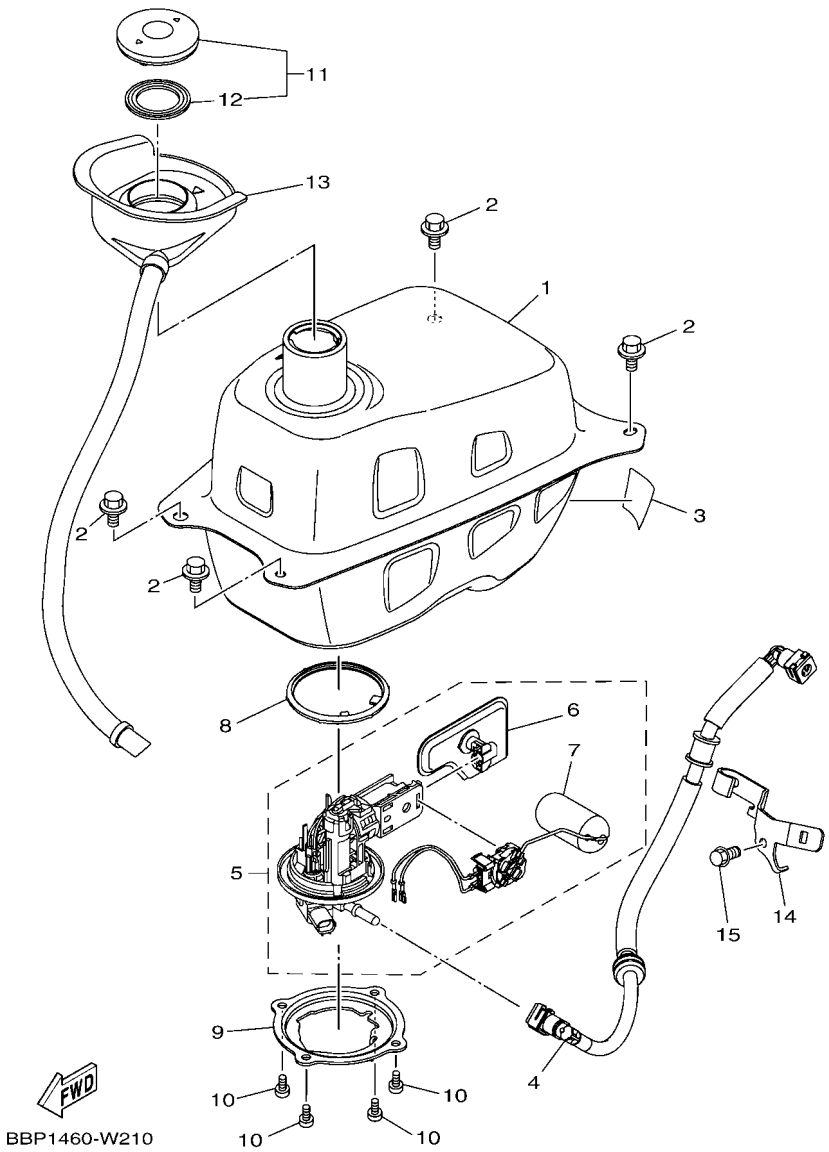

FIG. 22 FUEL TANK

REF. NO.	PART NO.	DESCRIPTION	BDL1	BDL2	BDL4			REMARKS
1	BBP–F4110–00	FUEL TANK COMP.	1	1	1			
2	90119–068D6	BOLT, WITH WASHER	4	4	4			
3	5D9–F414G–10	SEAL	1	1	1			
4	B65–E3971–00	PIPE, FUEL 1	1	1	1			
5	BBP–E3907–10	FUEL PUMP COMP.	1		1			
	BBP–E3907–00	FUEL PUMP COMP.		1				
6	54P–E3915–00	.FILTER, FUEL SUCTION	1	1	1			
7	B65–H5752–00	.SENDER UNIT ASSY, FUEL METER	1	1	1			
8	54P–F414G–10	SEAL	1	1	1			
9	2DP–F4491–00	BRACKET, FUEL PUMP	1	1	1			
10	91332–05010	BOLT	4	4	4			
11	4YY–F4610–00	CAP ASSY	1	1	1			
12	4YY–F4612–00	.PACKING, CAP	1	1	1			
13	B65–F414A–00	COVER, FILLER	1	1	1			
14	B6H–F419A–00	HOLDER	1	1	1			
15	95E37–06012	BOLT, FLANGE DEEP RECESS	1	1	1			

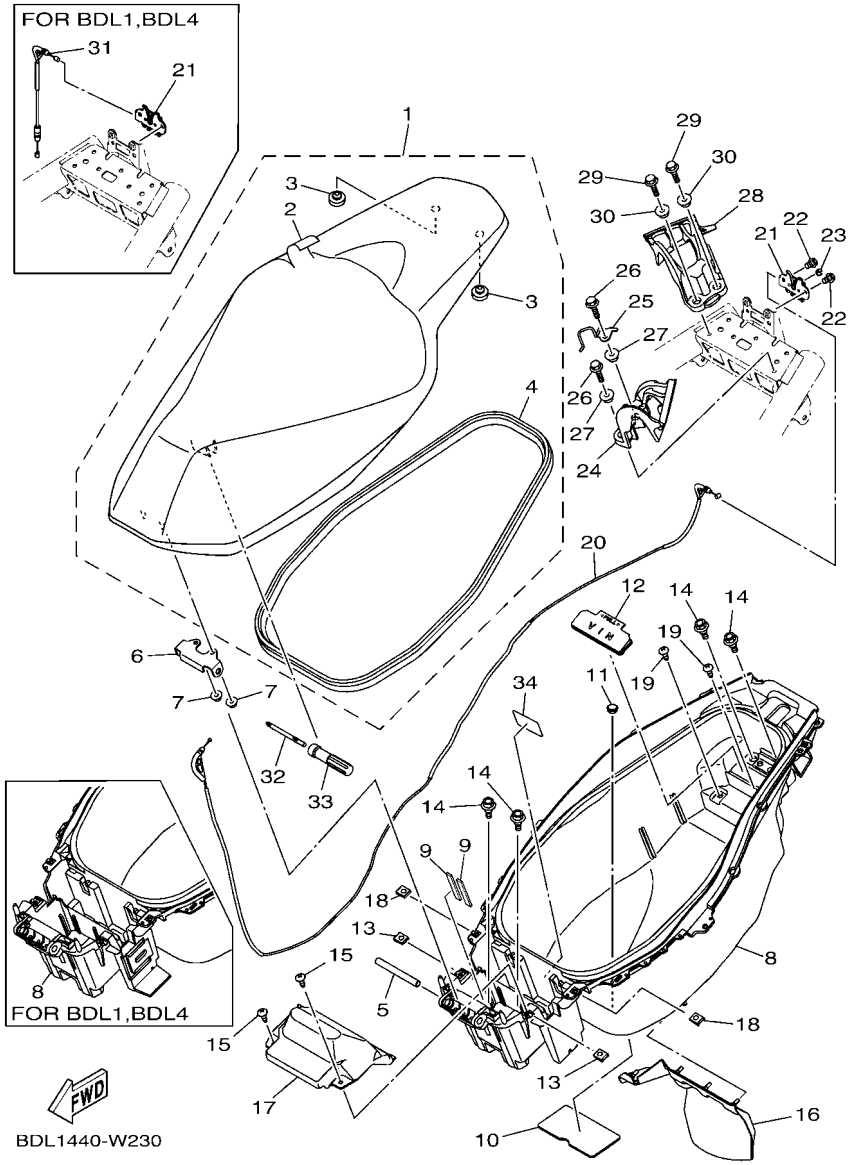

FIG. 23 SEAT

REF. NO.	PART NO.	DESCRIPTION	BDL1	BDL2	BDL4			REMARKS
1	BDL–F4730–00	DOUBLE SEAT ASSY	1	1	1			
2	BDL–F470F–00	.SEAT COVER COMP.	1	1	1			
3	3C1–F4741–00	.PAD, SEAT	2	2	2			
4	BBP–F475M–00	.SEAL	1	1	1			
5	2WB–F4727–00	PIN, SEAT FITTING	1	1	1			
6	B65–F4726–00	HINGE, SEAT	1	1	1			
7	95702–06500	NUT, FLANGE	2	2	2			
8	BBP–F473R–10	BOX 1	1		1			
	BBP–F473R–00	BOX 1		1				
9	90520–04806	DAMPER, PLATE	2	2	2			
10	B63–F4737–00	DAMPER, SEAT	1	1	1			
11	4US–F6199–00	PLUG, BLIND	1	1	1			
12	B65–F384L–00	COVER, DUST	1	1	1			
13	90183–05807	NUT, SPRING	2	2	2			
14	90109–068B5	BOLT	4	4	4			
15	97707–50016	SCREW, TRUSS HEAD TAPPING	2	2	2			
16	B65–F1621–00	FLAP	1	1	1			
17	BBP–H2129–00	COVER, BATTERY	1	1	1			
18	90183–05807	NUT, SPRING	2	2	2			
19	97707–50016	SCREW, TRUSS HEAD TAPPING	2	2	2			
20	BBP–F478E–00	CABLE, SEAT LOCK	1	1	1			
21	B65–F4705–00	SEAT LOCK ASSY	1		1			
	40D–F4780–01	SEAT LOCK ASSY		1				
22	95E32–06010	BOLT, FLANGE DEEP RECESS	2	2	2			
23	1S8–F4768–00	STOPPER	1	1	1			
24	B65–F474A–00	ASSIST, GRIP	1	1	1			
25	B65–F472J–00	GUIDE	1	1	1			

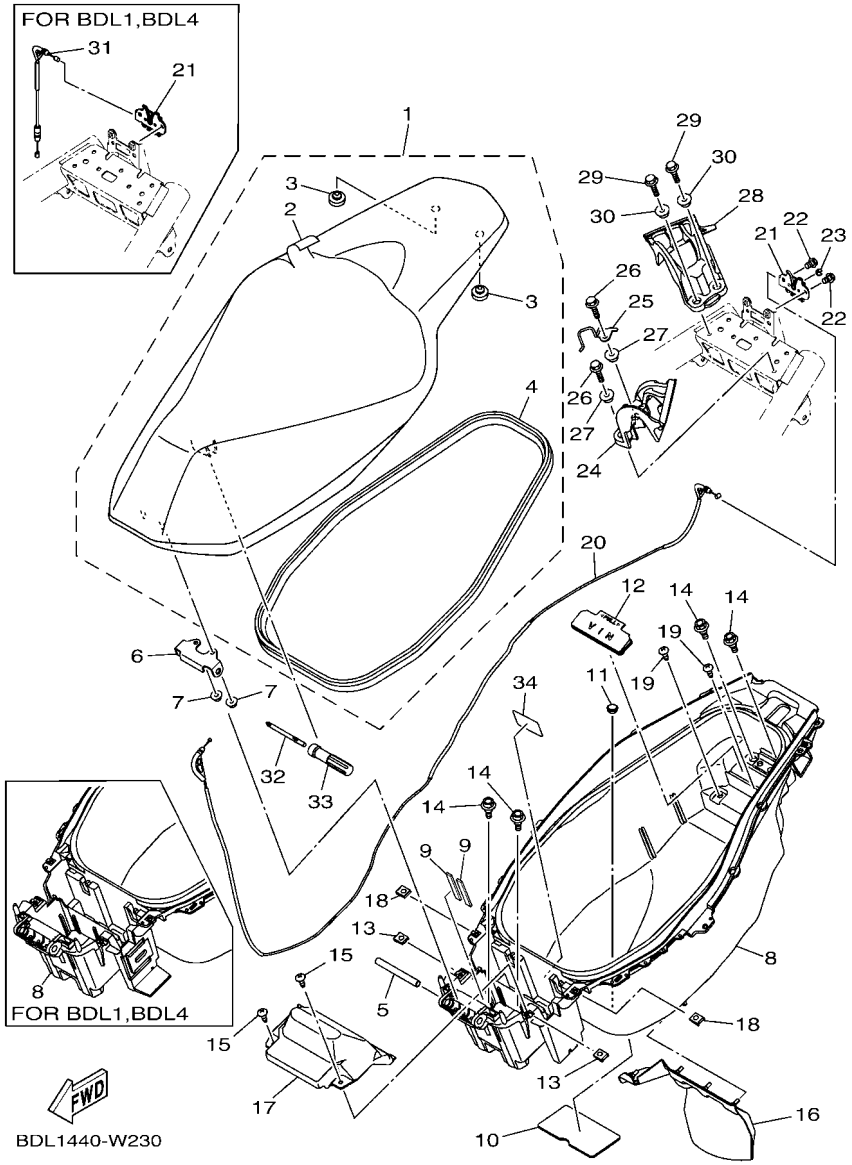

FIG. 23 SEAT

REF. NO.	PART NO.	DESCRIPTION	BDL1	BDL2	BDL4			REMARKS
26	95D32–06025	BOLT, FLANGE DEEP RECESS	2	2	2			
27	90387–08840	COLLAR	2	2	2			
28	B65–F474W–00	ASSIST,GRIP 2	1	1	1			
29	95D32–06025	BOLT, FLANGE DEEP RECESS	2	2	2			
30	90387–08840	COLLAR	2	2	2			
31	B65–F479D–00	WIRE, SEAT LOCK 2	1		1			
32	B65–F8153–00	DRIVER PLUS	1	1	1			
33	3AY–F8151–00	GRIP, DRIVER	1	1	1			
34	B17–F1668–00	LABEL, TIRE	1	1	1			

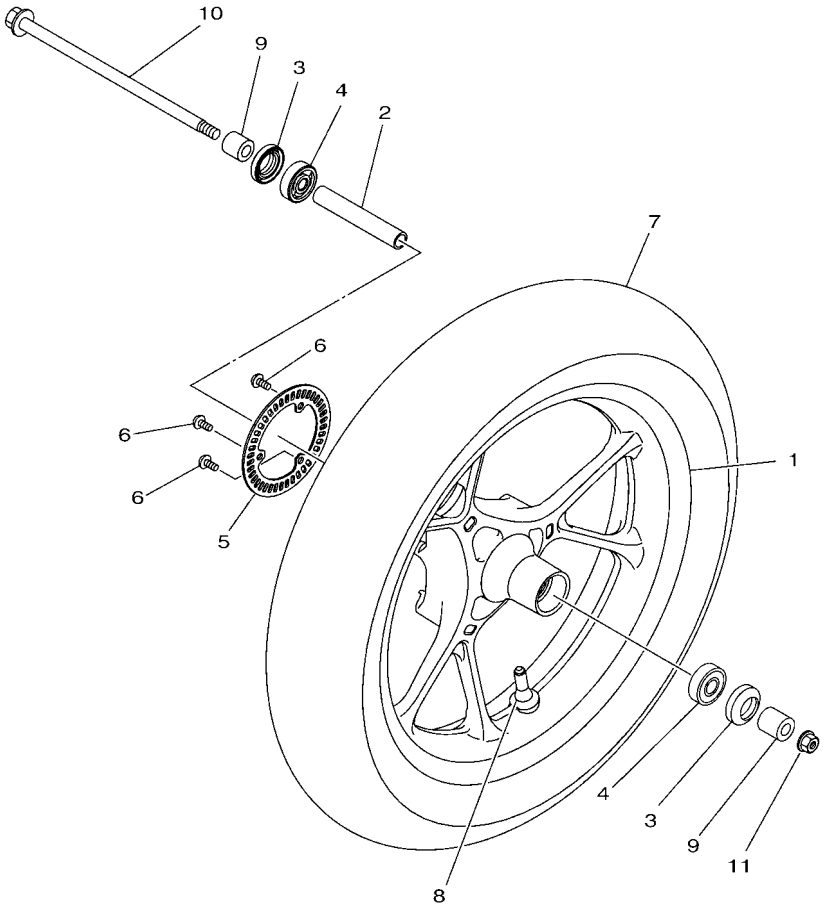

B631422-S210

FIG. 24 FRONT WHEEL

REF. NO.	PART NO.	DESCRIPTION	BDL1	BDL2	BDL4			REMARKS
1	B65–F5168–00–P4	CAST WHEEL, FRONT	1					LNYMD FOR WMB
	B65–F5168–00–33	CAST WHEEL, FRONT		1				YB FOR RM7,CM6
	B65–F5168–00–P0	CAST WHEEL, FRONT			1			DPBM15 FOR DPBMC
2	90387–10848	COLLAR	1	1	1			
3	93106–20816	OIL SEAL	2	2	2			
4	93306–300YF	BEARING	2	2	2			
5	2DP–F517G–00	ROTOR, SENSOR	1	1	1			
6	90149–05030	SCREW	3	3	3			
7	94111–14804	TIRE (110/80-14 M/C 53P)	1	1	1			INOUE
8	93900–00824	VALVE, RIM	1	1	1			
9	90387–10277	COLLAR	2	2	2			
10	B65–F5181–00	AXLE, WHEEL	1	1	1			
11	95602–10200	NUT, S/L FLANGE	1	1	1			

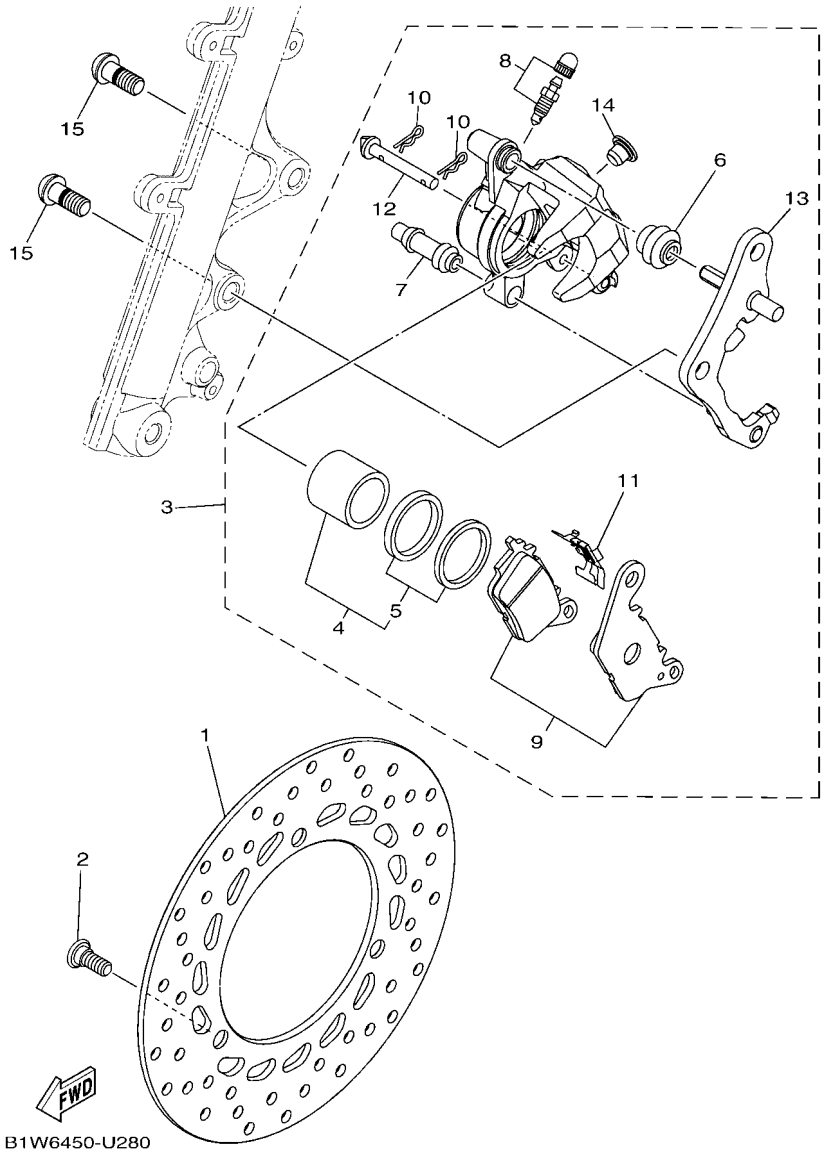

FIG. 25 FRONT BRAKE CALIPER

REF. NO.	PART NO.	DESCRIPTION	BDL1	BDL2	BDL4			REMARKS
1	2DP–F582U–00	DISK, BRAKE (RIGHT)	1	1	1			
2	90109–08232	BOLT	3	3	3			
3	B63–F580U–00	CALIPER ASSY (RIGHT)	1	1	1			
4	2BM–F5802–00	.PISTON ASSY, CALIPER	1	1	1			
5	5YP–F5803–50	..CALIPER SEAL KIT	1	1	1			
6	2BM–F5917–00	.BOOT, CALIPER	1	1	1			
7	5YP–F5937–00	.BOOT 2	1	1	1			
8	4C9–W0048–00	.BLEED SCREW KIT	1	1	1			
9	B63–F5805–00	.BRAKE PAD KIT	1	1	1			
10	5YP–F5925–01	.CLIP	2	2	2			
11	2BM–F5919–00	.SUPPORT, PAD	1	1	1			
12	5YP–F5924–00	.PIN, PAD	1	1	1			
13	2DP–F5920–00	.SUPT. BRKT. ASSY.	1	1	1			
14	2R6–F5916–00	.PLUG	1	1	1			
15	90149–10805	SCREW	2	2	2			

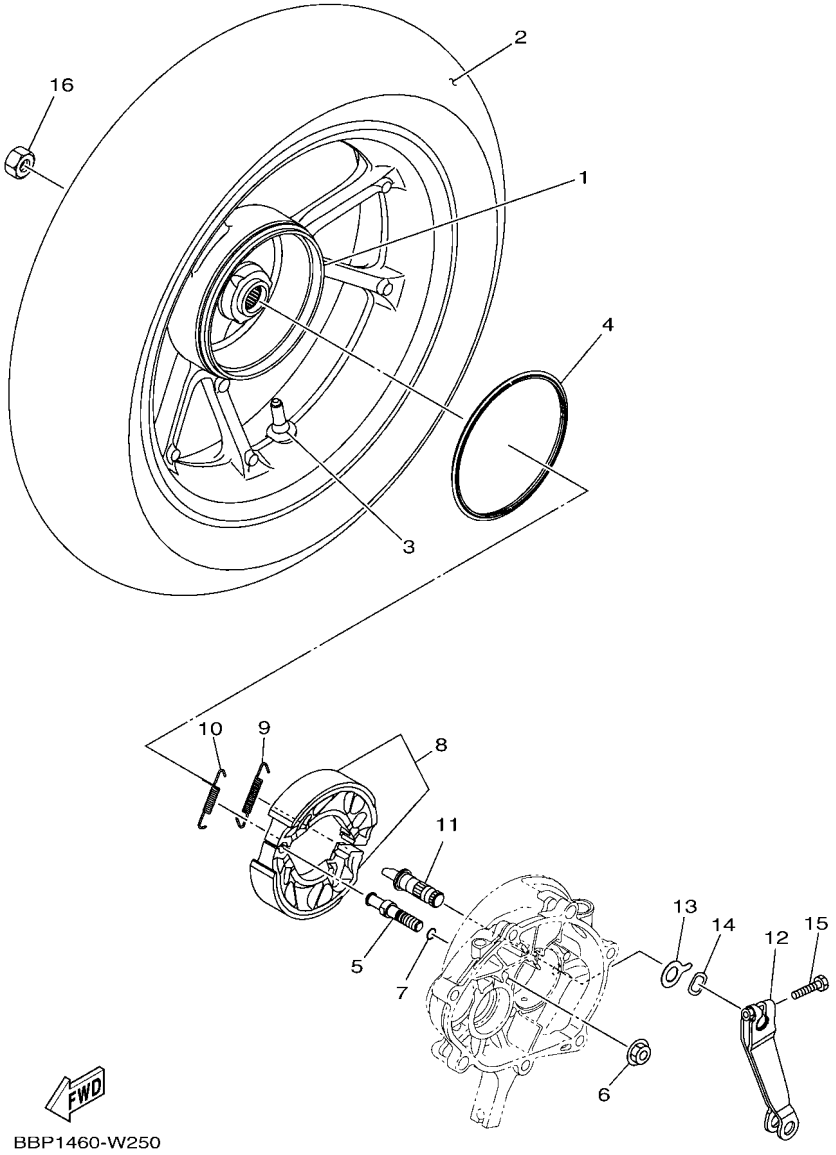

FIG. 26 REAR WHEEL

REF. NO.	PART NO.	DESCRIPTION	BDL1	BDL2	BDL4			REMARKS
1	B65–F5338–00–P5	CAST WHEEL, REAR	1					LNYMD FOR WMB
	B65–F5338–00–33	CAST WHEEL, REAR		1				YB FOR RM7,CM6
	B65–F5338–00–P0	CAST WHEEL, REAR			1			DPBM15 FOR DPBMC
2	94114–14801	TIRE (140/70-14 M/C 62P)	1	1	1			INOUE
3	93900–00824	VALVE, RIM	1	1	1			
4	B65–F5336–00	RING 2	1	1	1			
5	54P–F5326–00	PIN, PIVOT	1	1	1			
6	95702–10500	NUT, FLANGE	1	1	1			
7	93210–07802	O-RING	1	1	1			
8	5BP–F530K–20	BRAKE SHOE SET	1	1	1			
9	90506–12001	SPRING, TENSION	1	1	1			
10	90506–15001	SPRING, TENSION	1	1	1			
11	B65–F5351–00	CAMSHAFT	1	1	1			
12	BBP–F5355–00	LEVER, CAMSHAFT	1	1	1			
13	5LW–F533A–00	PLATE, INDICATOR	1	1	1			
14	90206–14093	WASHER, WAVE	1	1	1			
15	90101–06046	BOLT	1	1	1			
16	90185–16800	NUT, SELF-LOCKING	1	1	1			

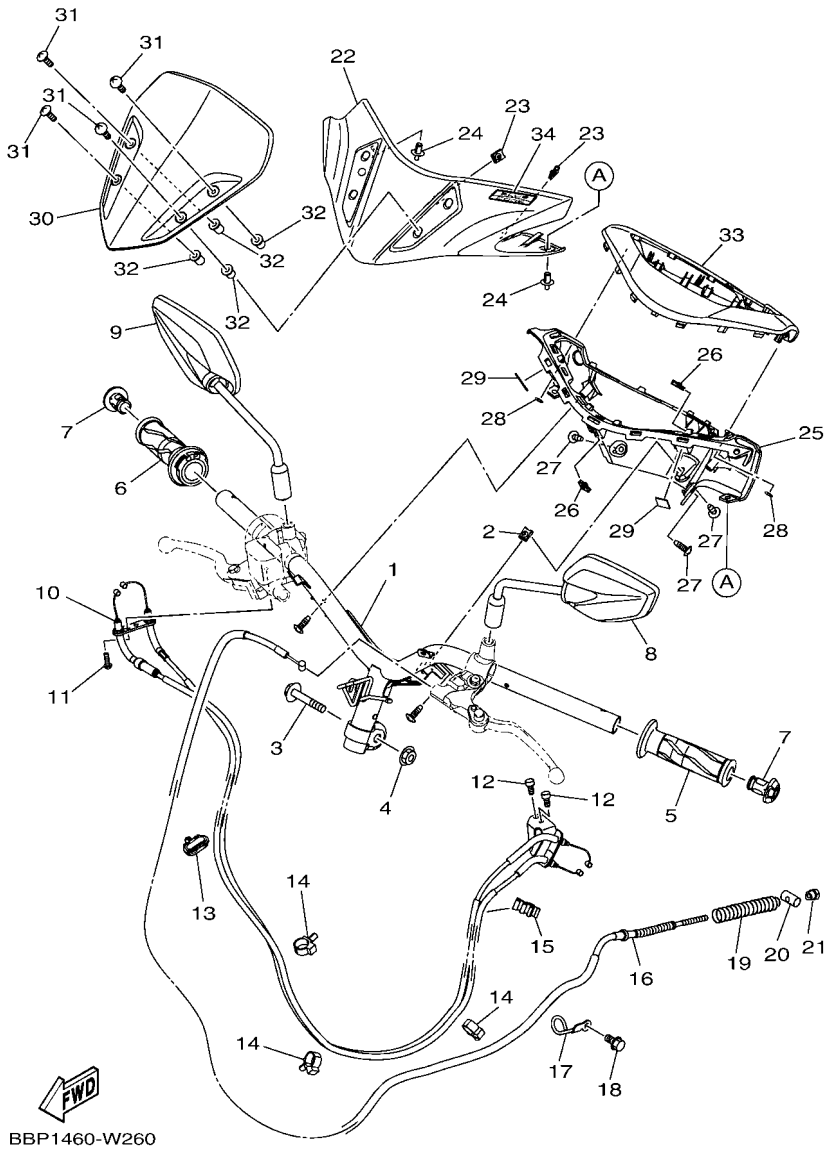

FIG. 27 STEERING HANDLE & CABLE

REF. NO.	PART NO.	DESCRIPTION	BDL1	BDL2	BDL4			REMARKS
1	BBP–F6110–00	HANDLE COMP.	1	1	1			
2	90183–05807	NUT, SPRING	1	1	1			
3	90105–108B0	BOLT, FLANGE	1	1	1			
4	90185–10011	NUT, SELF-LOCKING	1	1	1			
5	1VP–F6241–00	GRIP	1	1	1			
6	B92–F6240–00	GRIP ASSY	1	1	1			
7	B92–F6246–00	END, GRIP	2	2	2			
8	B70–F6280–00	REAR VIEW MIRROR ASSY (LEFT)	1	1	1			
9	B70–F6290–00	REAR VIEW MIRROR ASSY (RIGHT)	1	1	1			
10	BBP–F6301–00	THROTTLE CABLE ASSY	1	1	1			
11	92012–05016	BOLT, BUTTON HEAD	1	1	1			
12	91312–05010	BOLT, HEXAGON SOCKET HEAD	2	2	2			
13	90464–10802	CLAMP	1	1	1			
14	90464–16006	CLAMP	3	3	3			
15	90464–07807	CLAMP	1	1	1			
16	BBP–F6351–00	CABLE, BRAKE	1	1	1			
17	BBP–F637G–00	HOLDER, WIRE	1	1	1			
18	95E32–06012	BOLT, FLANGE DEEP RECESS	1	1	1			
19	90501–16804	SPRING, COMPRESSION	1	1	1			
20	90249–12008	PIN	1	1	1			
21	90179–06835	NUT	1	1	1			
22	BBP–F6143–00	COVER, HANDLE UPPER 1	1	1	1			
23	90183–05807	NUT, SPRING	2	2	2			
24	90269–06816	RIVET	2	2	2			
25	BBP–F6145–00	COVER, HANDLE UPPER 2	1	1	1			
26	90183–05807	NUT, SPRING	2	2	2			
27	97707–50016	SCREW, TRUSS HEAD TAPPING	3	3	3			

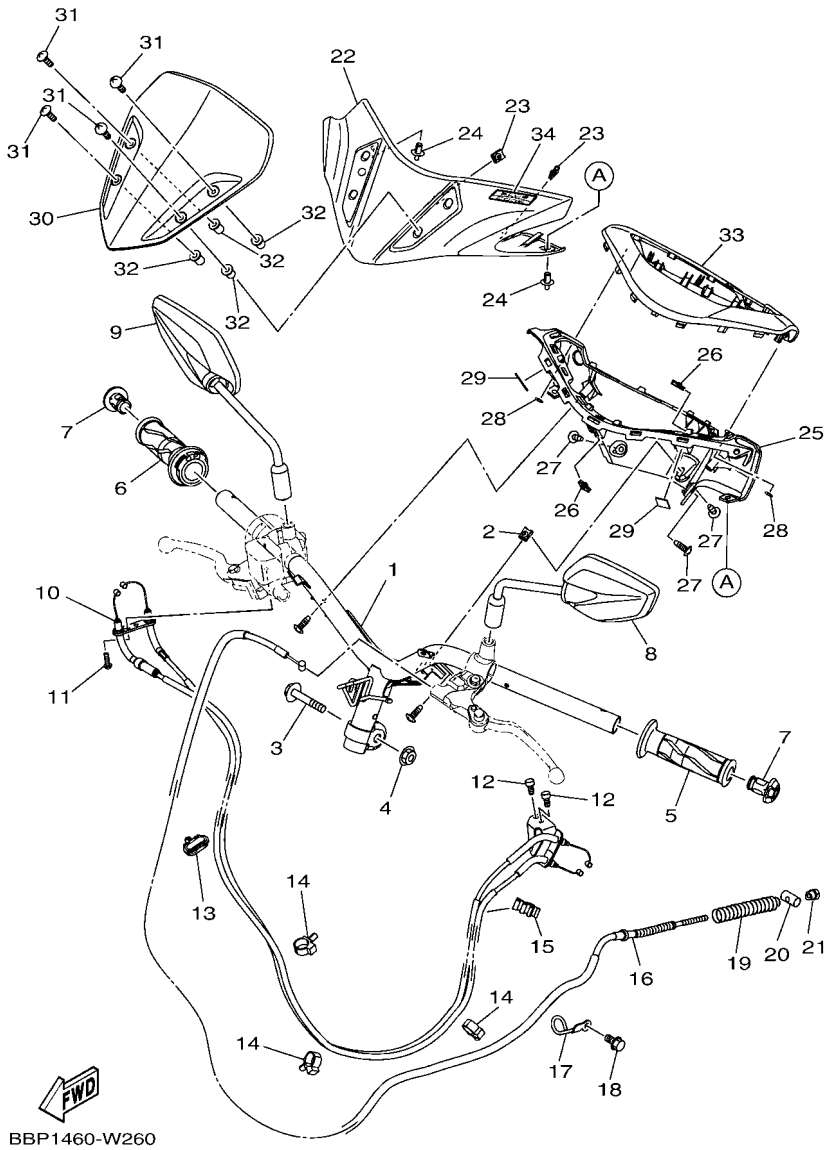

FIG. 27 STEERING HANDLE & CABLE

REF. NO.	PART NO.	DESCRIPTION	BDL1	BDL2	BDL4			REMARKS
28	90183–05801	NUT, SPRING	2	2	2			
29	90520–01801	DAMPER, PLATE	2	2	2			
30	B65–F61AA–00	VISOR	1	1	1			
31	90150–05806	SCREW, ROUND HEAD	4	4	4			
32	90179–05802	NUT	4	4	4			
33	BBP–H3559–00–P5	COVER, METER	1					WMB
	BBP–H3559–00–P7	COVER, METER		1				UR FOR RM7
	BBP–H3559–00–P8	COVER, METER		1				UR FOR CM6
	BBP–H3559–00–P6	COVER, METER			1			MBNM3 FOR DPBMC
34	B92–F1737–00	EMBLEM	1	1	1			

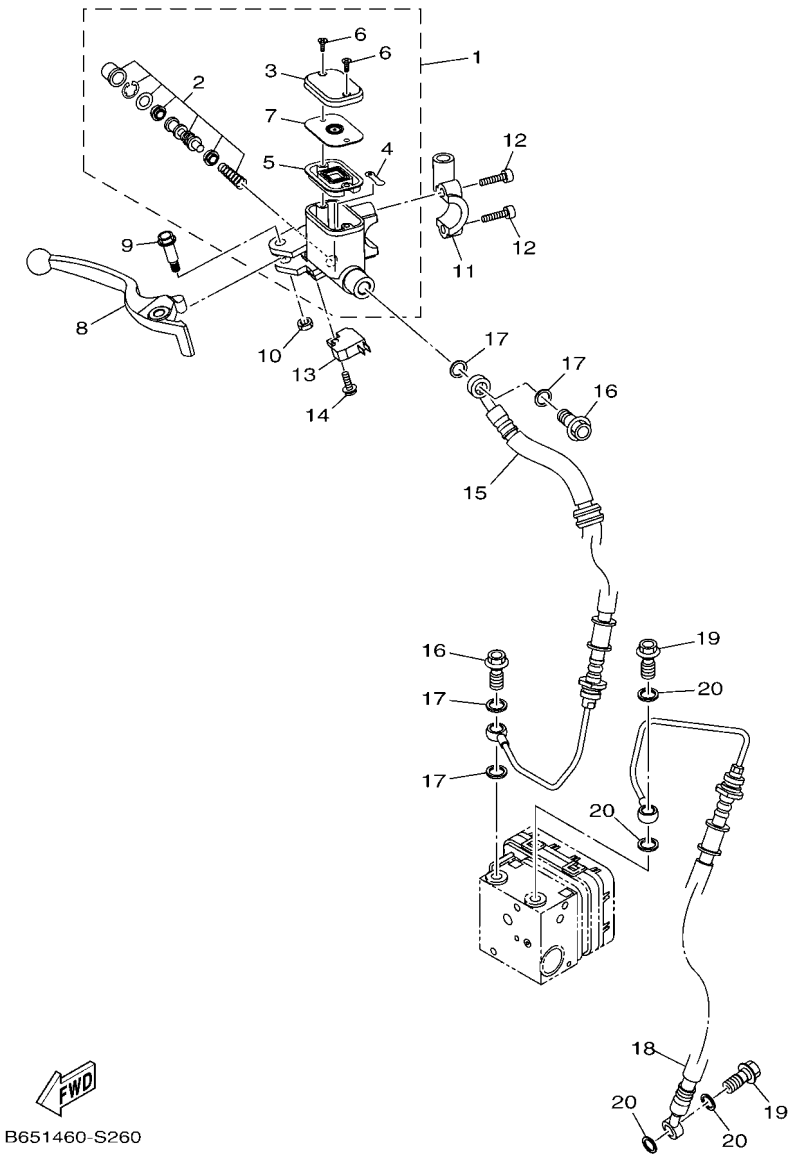

FIG. 28 FRONT MASTER CYLINDER

REF. NO.	PART NO.	DESCRIPTION	BDL1	BDL2	BDL4			REMARKS
1	B63–F5870–00	MASTER CYLINDER SUB ASSY	1		1			
2	1WD–F5807–00	.CYLINDER KIT, MASTER	1		1			
3	B63–F5852–00	.CAP, RESERVOIR	1		1			
4	3RW–F5889–00	.SEPARATOR	1		1			
5	2ND–F5854–00	.DIAPHRAGM, RESERVOIR	1		1			
6	36Y–2589H–00	.SCREW	2		2			
7	2ND–F5855–00	.BUSH,DIAPHRAGM	1		1			
8	2PV–H3922–00	LEVER 2	1		1			
9	90109–06577	BOLT	1		1			
10	95602–06100	NUT, SELF-LOCKING	1		1			
11	5TL–F5867–11	BRACKET,MASTER CYLINDER(BLACK)	1		1			
12	91317–06025	BOLT,HEX.SOCKET HEAD	2		2			
13	2DP–H3980–01	FRONT STOP SWITCH ASSY	1		1			
14	97602–04312	SCREW, PAN HEAD WITH WASHER	1		1			
15	B65–F5873–00	HOSE, BRAKE 2	1		1			UR
	B65–F5873–10	HOSE, BRAKE 2	1		1			UR
16	90401–10812	BOLT, UNION	2		2			
17	90201–10118	WASHER, PLATE	4		4			
18	B65–F5874–00	HOSE, BRAKE 3	1		1			UR
	B65–F5874–10	HOSE, BRAKE 3	1		1			UR
19	90401–10812	BOLT, UNION	2		2			
20	90201–10118	WASHER, PLATE	4		4			

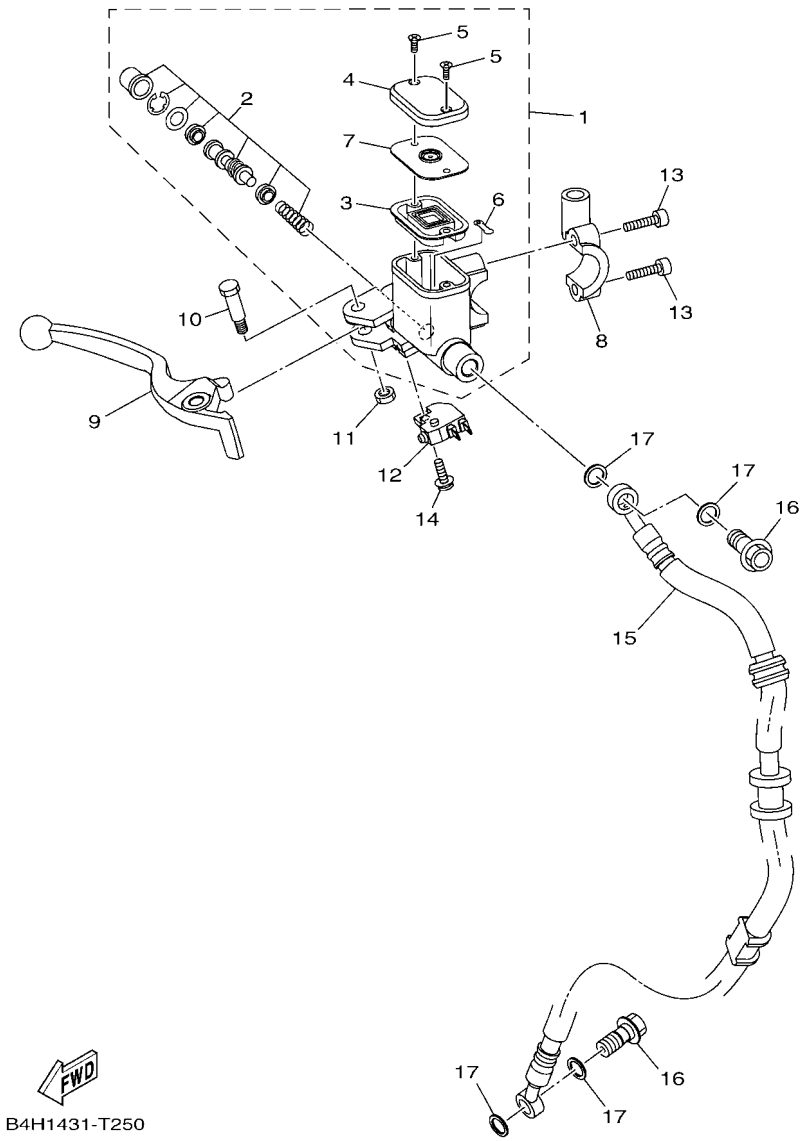

FIG. 29 FRONT MASTER CYLINDER 2

REF. NO.	PART NO.	DESCRIPTION	BDL1	BDL2	BDL4			REMARKS
1	2ND–F5870–00	MASTER CYLINDER SUB ASSY		1				
2	5P0–F580A–00	.CYLINDER KIT, MASTER		1				
3	2ND–F5854–00	.DIAPHRAGM, RESERVOIR		1				
4	2ND–F5852–00	.CAP, RESERVOIR		1				
5	36Y–2589H–00	.SCREW		2				
6	3RW–25889–00	.SEPARATOR		1				
7	2ND–F5855–00	.BUSH,DIAPHRAGM		1				
8	5TL–F5867–11	BRACKET,MASTER CYLINDER(BLACK)		1				
9	2PV–H3922–00	LEVER 2		1				
10	90109–06577	BOLT		1				
11	95602–06100	NUT, SELF-LOCKING		1				
12	2DP–H3980–01	FRONT STOP SWITCH ASSY		1				
13	91317–06025	BOLT,HEX.SOCKET HEAD		2				
14	97602–04312	SCREW, PAN HEAD WITH WASHER		1				
15	B65–F5872–00	HOSE, BRAKE 1		1				UR
	B65–F5872–10	HOSE, BRAKE 1		1				UR
16	90401–10812	BOLT, UNION		2				
17	90201–10118	WASHER, PLATE		4				

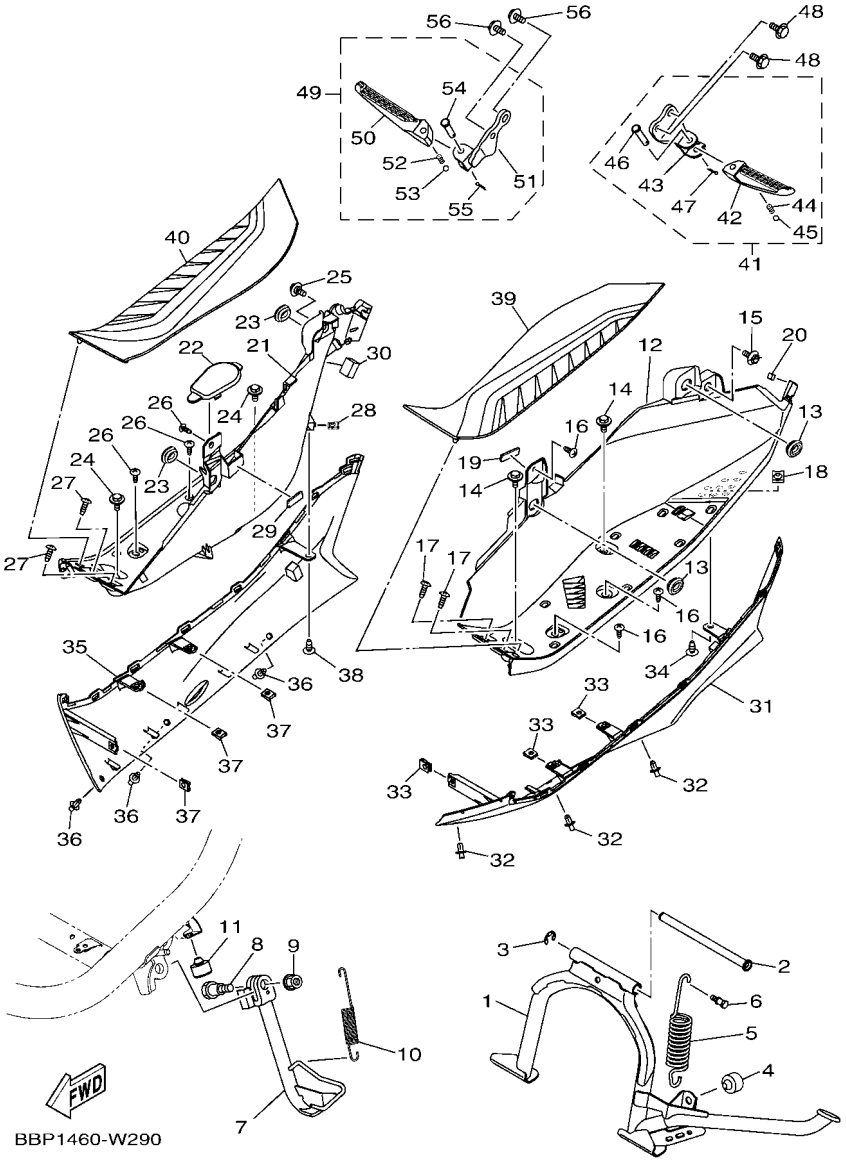

FIG. 30 STAND & FOOTREST

REF. NO.	PART NO.	DESCRIPTION	BDL1	BDL2	BDL4			REMARKS
1	BBP–F7111–00	STAND, MAIN	1	1	1			
2	B6H–F7112–00	SHAFT, MAIN STAND	1	1	1			
3	99002–09600	CIRCLIP	1	1	1			
4	54P–F7114–00	STOPPER, MAIN STAND	1	1	1			
5	90506–40804	SPRING, TENSION	1	1	1			
6	90109–068B9	BOLT	1	1	1			
7	BBP–F7311–00	STAND, SIDE	1	1	1			
8	B65–F7217–00	BOLT	1	1	1			UR
	B63–F7217–00	BOLT	1	1	1			UR
9	95602–10200	NUT, S/L FLANGE	1	1	1			
10	90506–20818	SPRING, TENSION	1	1	1			
11	4YY–F7114–00	STOPPER, MAIN STAND	1	1	1			
12	BBP–F7481–00	BOARD, FOOTREST	1	1	1			
13	90480–01559	GROMMET	2	2	2			
14	90119–06044	BOLT, WITH WASHER	2	2	2			
15	90109–068B5	BOLT	1	1	1			
16	97707–50016	SCREW, TRUSS HEAD TAPPING	3	3	3			
17	97702–50012	SCREW, TAPPING	2	2	2			
18	90183–05807	NUT, SPRING	1	1	1			
19	90520–03802	DAMPER, PLATE	1	1	1			
20	90520–04809	DAMPER, PLATE	1	1	1			
21	BBP–F7488–00	BOARD, FOOTREST 2	1	1	1			
22	2DP–F172W–00	COVER	1	1	1			
23	90480–01559	GROMMET	2	2	2			
24	90119–06044	BOLT, WITH WASHER	2	2	2			
25	90109–068B5	BOLT	1	1	1			
26	97707–50016	SCREW, TRUSS HEAD TAPPING	3	3	3			

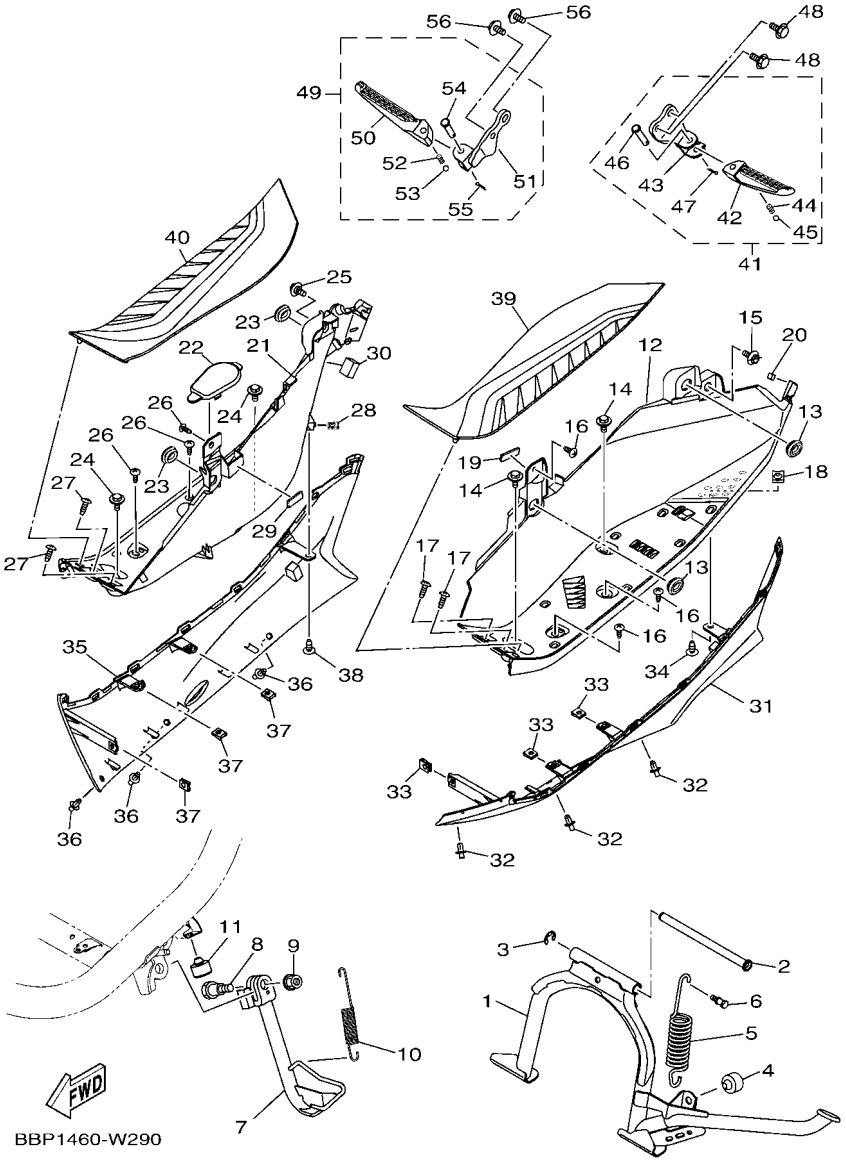

FIG. 30 STAND & FOOTREST

REF. NO.	PART NO.	DESCRIPTION	BDL1	BDL2	BDL4			REMARKS
27	97702–50012	SCREW, TAPPING	2	2	2			
28	90183–05807	NUT, SPRING	1	1	1			
29	90520–03802	DAMPER, PLATE	1	1	1			
30	90520–10850	DAMPER, PLATE	1	1	1			
31	BBP–F171L–00	MOLE, SIDE COVER 1	1	1	1			
32	90269–06816	RIVET	3	3	3			
33	90183–05807	NUT, SPRING	3	3	3			
34	97702–50012	SCREW, TAPPING	1	1	1			
35	BBP–F171M–00	MOLE, SIDE COVER 2	1	1	1			
36	90269–06816	RIVET	3	3	3			
37	90183–05807	NUT, SPRING	3	3	3			
38	97702–50012	SCREW, TAPPING	1	1	1			
39	BBP–F7483–00	MAT 1	1	1	1			
40	BBP–F7484–00	MAT 2	1	1	1			
41	BBP–F7430–00	REAR FOOTREST ASSY 1	1	1	1			
42	B65–F7431–00	.FOOTREST, REAR 1	1	1	1			
43	BBP–F7452–00	.BRACKET, FOOTREST 1	1	1	1			
44	90501–12743	.SPRING, COMPRESSION	1	1	1			
45	93501–04830	.BALL	1	1	1			
46	91701–08035	.PIN	1	1	1			
47	91401–25015	.PIN, COTTER	1	1	1			
48	95D32–08020	BOLT, FLANGE DEEP RECESS	2	2	2			
49	BBP–F7440–00	REAR FOOTREST ASSY 2	1	1	1			
50	B65–F7441–00	.FOOTREST, REAR 2	1	1	1			
51	BBP–F7462–00	.BRACKET, FOOTREST 2	1	1	1			
52	90501–12743	.SPRING, COMPRESSION	1	1	1			
53	93501–04830	.BALL	1	1	1			

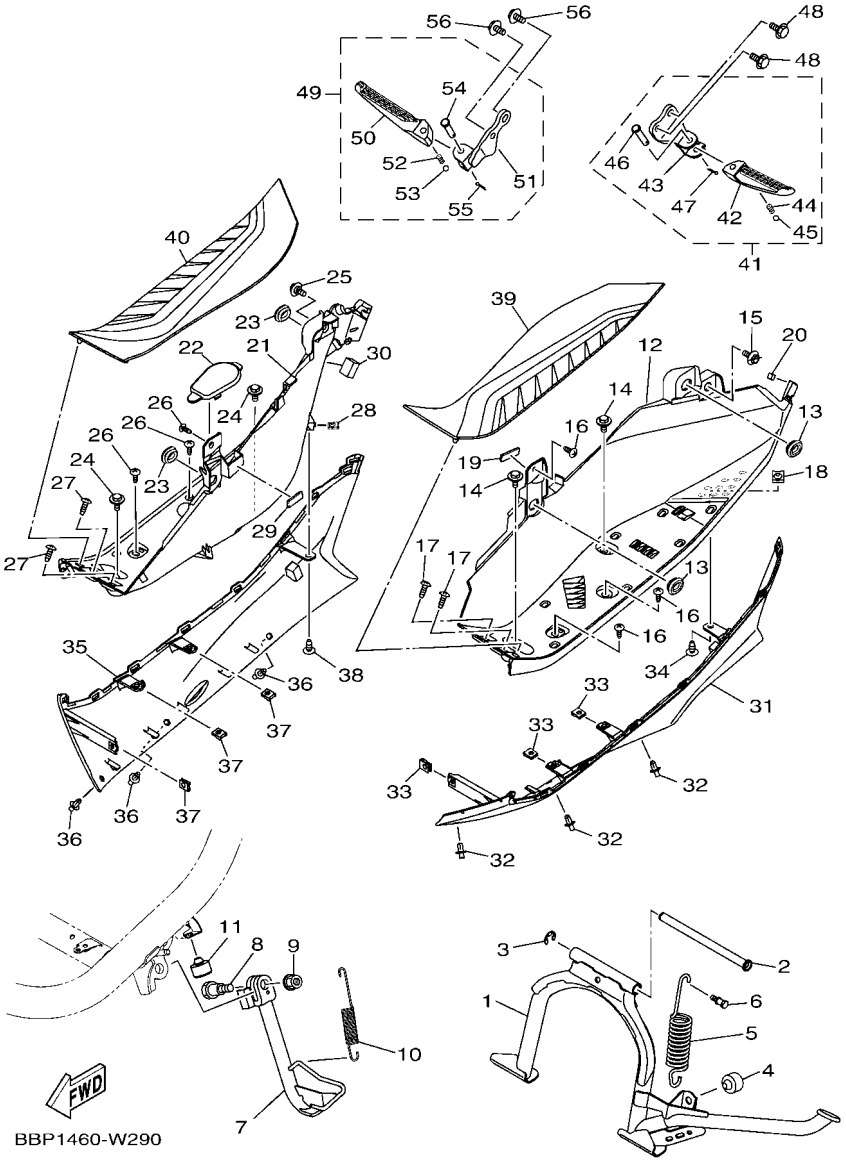

FIG. 30 STAND & FOOTREST

REF. NO.	PART NO.	DESCRIPTION	BDL1	BDL2	BDL4			REMARKS
54	91701–08035	.PIN	1	1	1			
55	91401–25015	.PIN, COTTER	1	1	1			
56	95D32–08020	BOLT, FLANGE DEEP RECESS	2	2	2			

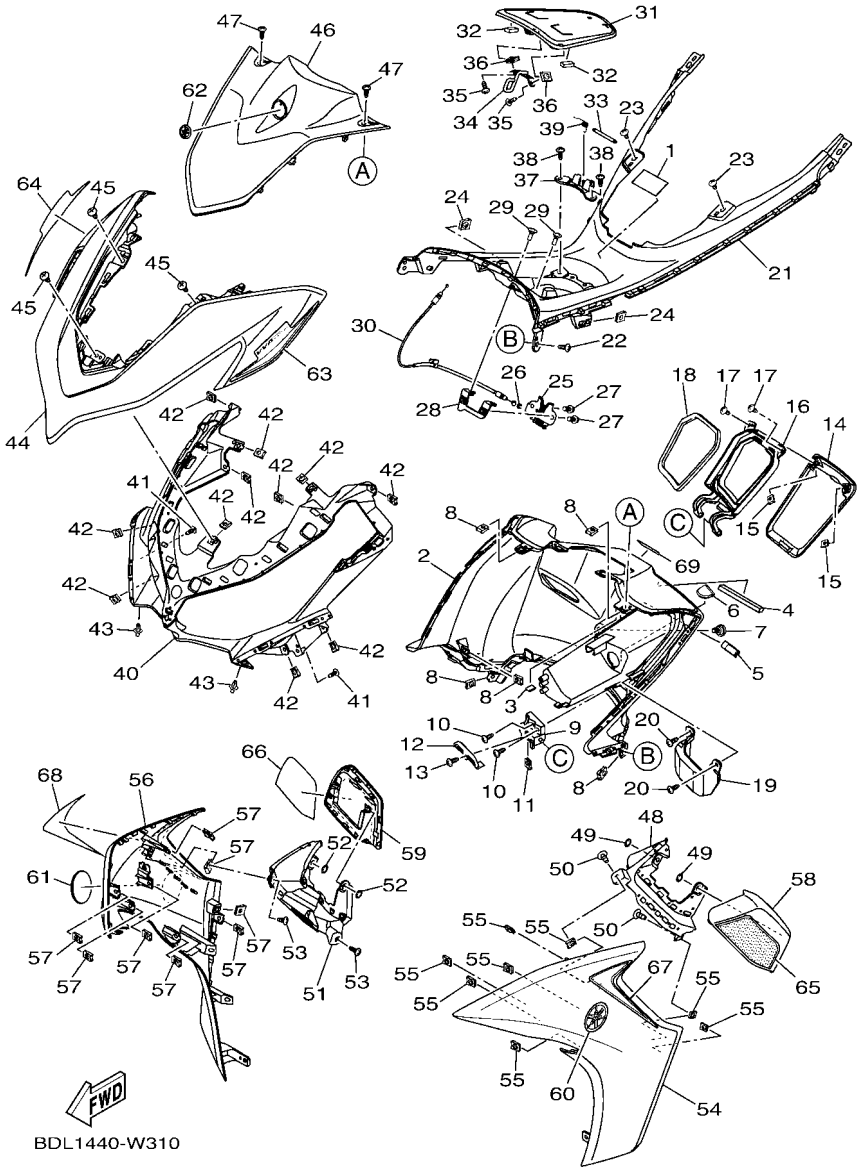

FIG. 31 LEG SHIELD

REF. NO.	PART NO.	DESCRIPTION	BDL1	BDL2	BDL4			REMARKS
1	BG3–F1568–00	LABEL, WARNING	1					
2	BBP–F8312–00	LEG SHIELD 2	1					
3	90520–01806	DAMPER, PLATE	1					
4	90520–06822	DAMPER, PLATE	1					
5	BBP–F4618–00	PLATE, LOCK 3	1					
6	BBP–F8349–00	CAP	1					
7	90109–068B3	BOLT	1					
8	90183–05807	NUT, SPRING	5					
9	BBP–F8321–00	STAY 1	1					
10	90160–05012	SCREW, ROUND TAPPING	2					
11	90183–05807	NUT, SPRING	1					
12	BBN–F1796–00	HINGE	1					
13	97707–50016	SCREW, TRUSS HEAD TAPPING	1					
14	BBP–F177E–00	LID	1					
15	90183–05807	NUT, SPRING	2					
16	BBP–F8322–00	STAY 2	1					
17	97702–50012	SCREW, TAPPING	2					
18	90520–06821	DAMPER, PLATE	1					
19	BBP–F8365–00	COVER	1					
20	97707–50016	SCREW, TRUSS HEAD TAPPING	2					
21	BBP–F842M–00	COVER 1	1					
22	97702–50012	SCREW, TAPPING	1					
23	97707–50016	SCREW, TRUSS HEAD TAPPING	2					
24	90183–05807	NUT, SPRING	2					
25	40D–F4780–01	SEAT LOCK ASSY	1					
26	1S8–F4768–00	STOPPER	1					
27	95E32–06012	BOLT, FLANGE DEEP RECESS	2					

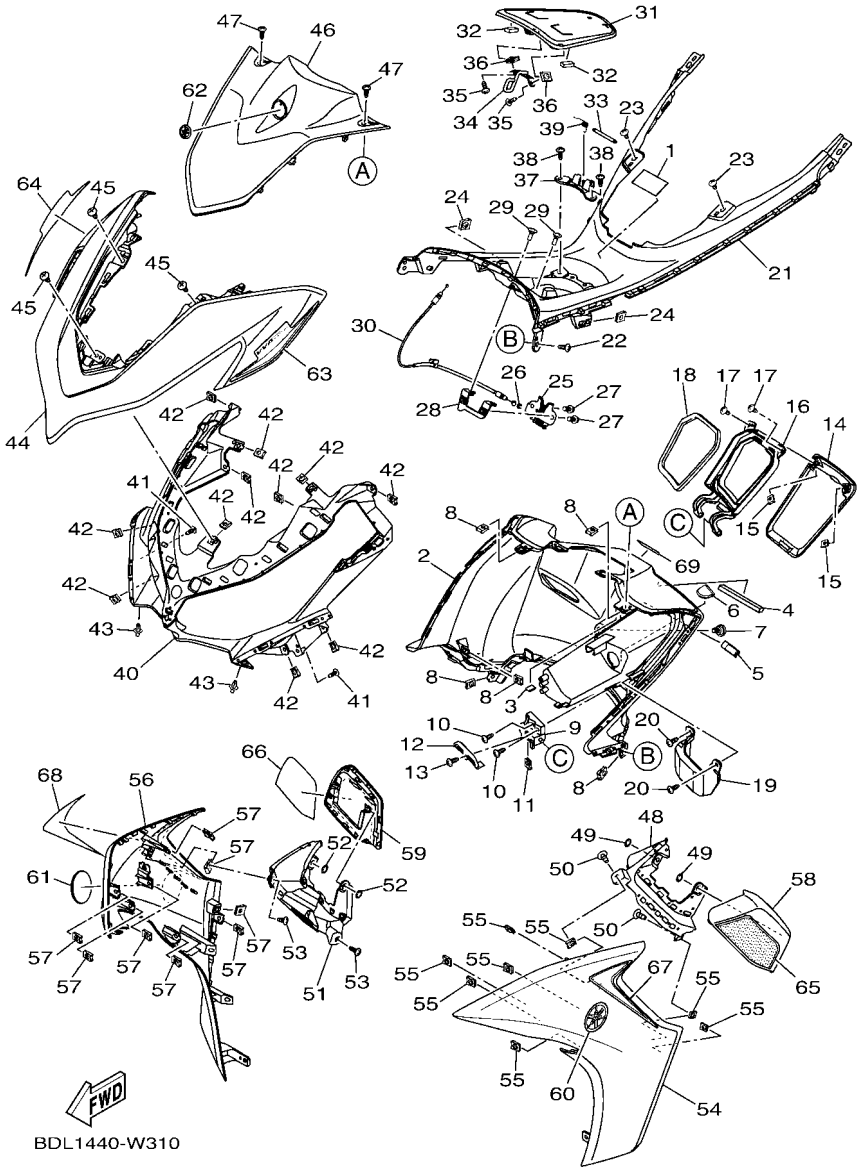

FIG. 31 LEG SHIELD

REF. NO.	PART NO.	DESCRIPTION	BDL1	BDL2	BDL4			REMARKS
28	B65–F8357–10	STAY 2	1					
29	90149–05804	SCREW	2					
30	B65–F4494–10	WIRE, PULL	1					
31	BBP–F74A8–00	LID, FUEL	1					
32	90520–10850	DAMPER, PLATE	2					
33	B65–F818A–00	PIN	1					
34	B65–F131C–00	BAR LOCK	1					
35	97702–50012	SCREW, TAPPING	2					
36	90183–05807	NUT, SPRING	2					
37	BBP–F846K–00	COVER, HINGE 1	1					
38	97707–50016	SCREW, TRUSS HEAD TAPPING	2					
39	BBP–F7426–00	SPRING, RETURN	1					
40	BBP–F8311–00	LEG SHIELD 1	1					
41	97702–50012	SCREW, TAPPING	2					
42	90183–05807	NUT, SPRING	11					
43	90269–06816	RIVET	2					
44	BBP–F2865–00–P5	COVER, FRONT	1					WMB
45	97707–50016	SCREW, TRUSS HEAD TAPPING	3					
46	BBN–F286F–00	COVER, FRONT 2	1					
47	90160–05814	SCREW, ROUND TAPPING	2					
48	BBP–F8351–00	BODY, COWLING	1					
49	90183–06815	NUT, SPRING	2					
50	97702–50012	SCREW, TAPPING	2					
51	BBP–F8377–00	BODY, COWLING 2	1					
52	90183–06815	NUT, SPRING	2					
53	97702–50012	SCREW, TAPPING	2					
54	BBP–F835U–00–P5	PANEL 1	1					WMB

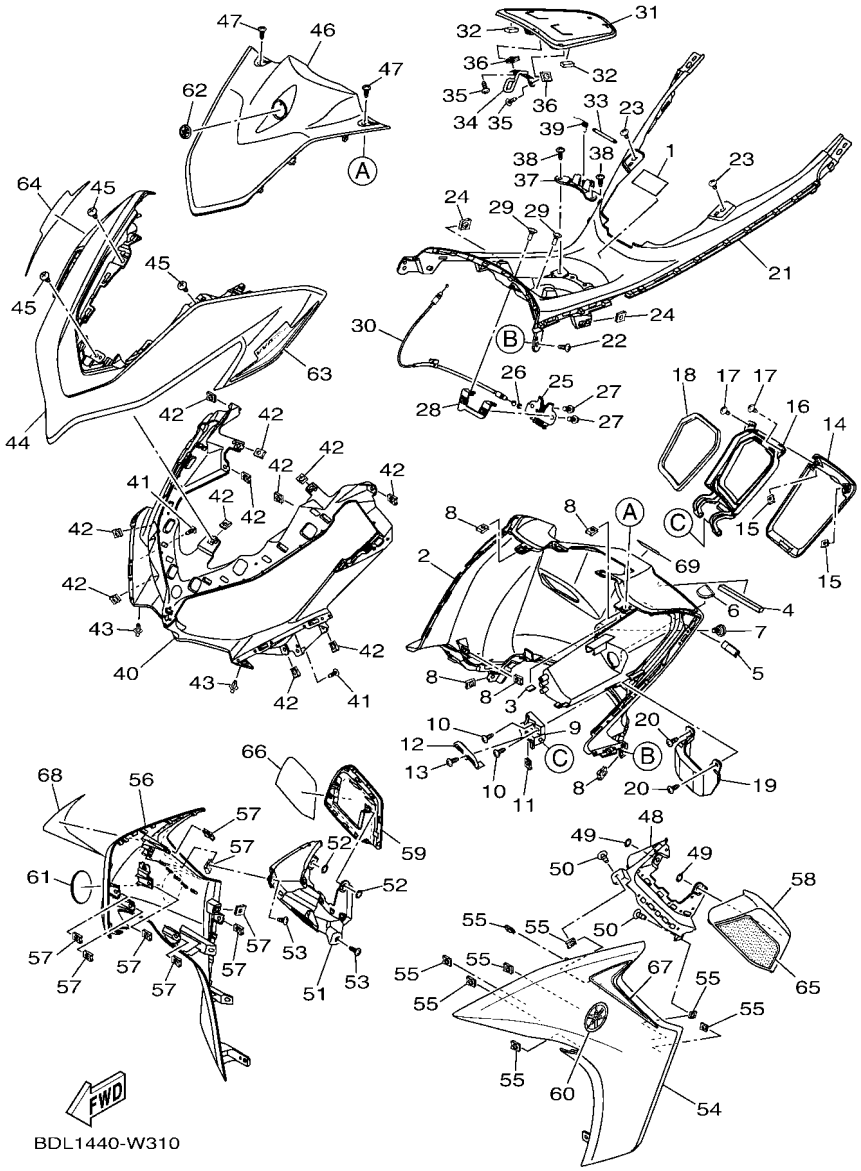

FIG. 31 LEG SHIELD

REF. NO.	PART NO.	DESCRIPTION	BDL1	BDL2	BDL4			REMARKS
55	90183–05807	NUT, SPRING	8					
56	BBP–F835V–00–P5	PANEL 2	1					WMB
57	90183–05807	NUT, SPRING	8					
58	BBP–F8345–00–P5	MOLE 1	1					WMB
59	BBP–F8346–00–P5	MOLE 2	1					WMB
60	5P2–F839B–00	EMBLEM 3D	1					
61	5P2–F839B–00	EMBLEM 3D	1					
62	5P2–F1737–00	EMBLEM	1					
63	BDL–F8391–00	GRAPHIC 1	1					
64	BDL–F8392–00	GRAPHIC 2	1					
65	BDL–F8393–00	GRAPHIC 3	1					
66	BDL–F8394–00	GRAPHIC 4	1					
67	BDL–F8398–00	GRAPHIC 5	1					
68	BDL–F8399–00	GRAPHIC 6	1					
69	BDL–F834C–00	EMBLEM, 1	1					

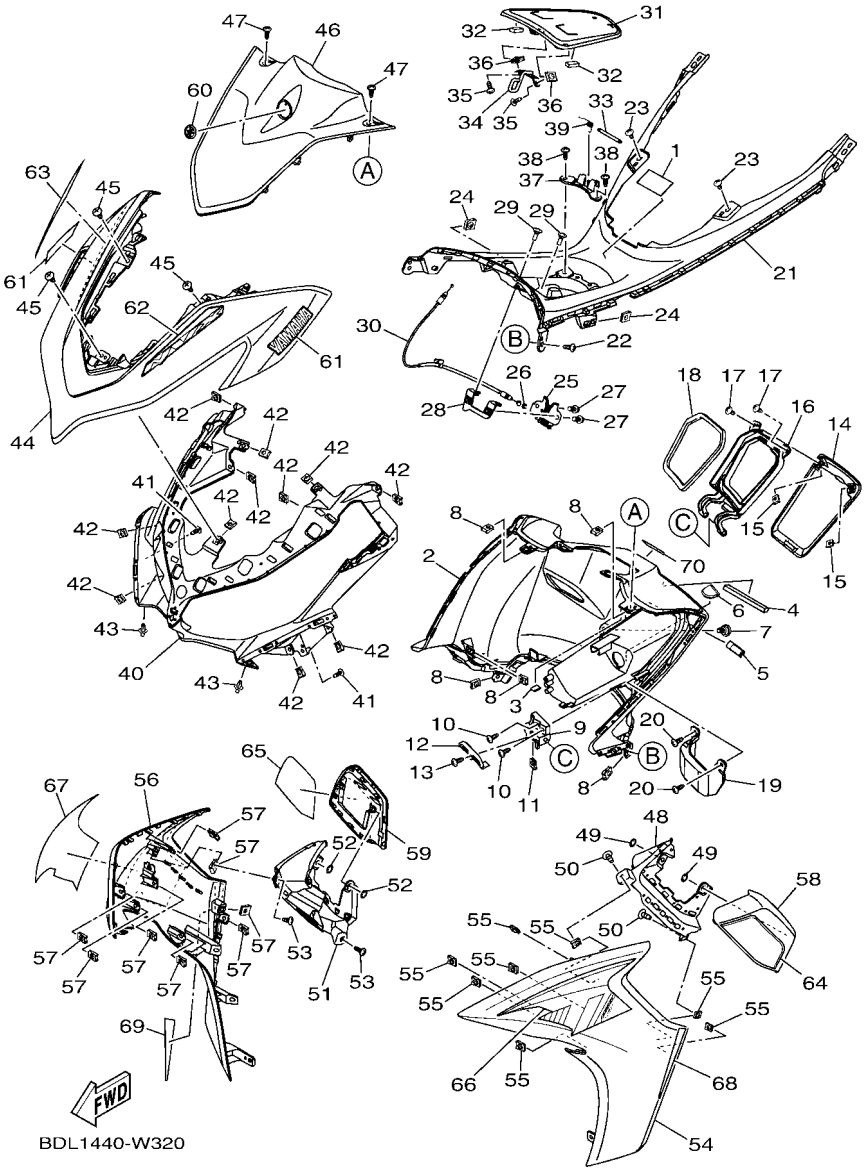

FIG. 32 LEG SHIELD 2

REF. NO.	PART NO.	DESCRIPTION	BDL1	BDL2	BDL4			REMARKS
1	BG3–F1568–00	LABEL, WARNING		1				
2	BBP–F8312–00	LEG SHIELD 2		1				
3	90520–01806	DAMPER, PLATE		1				
4	90520–06822	DAMPER, PLATE		1				
5	BBP–F4618–00	PLATE, LOCK 3		1				
6	BBP–F8349–00	CAP		1				
7	90109–068B3	BOLT		1				
8	90183–05807	NUT, SPRING		5				
9	BBP–F8321–00	STAY 1		1				
10	90160–05012	SCREW, ROUND TAPPING		2				
11	90183–05807	NUT, SPRING		1				
12	BBN–F1796–00	HINGE		1				
13	97707–50016	SCREW, TRUSS HEAD TAPPING		1				
14	BBP–F177E–00	LID		1				
15	90183–05807	NUT, SPRING		2				
16	BBP–F8322–00	STAY 2		1				
17	97702–50012	SCREW, TAPPING		2				
18	90520–06821	DAMPER, PLATE		1				
19	BBP–F8365–00	COVER		1				
20	97707–50016	SCREW, TRUSS HEAD TAPPING		2				
21	BBP–F842M–00	COVER 1		1				
22	97702–50012	SCREW, TAPPING		1				
23	97707–50016	SCREW, TRUSS HEAD TAPPING		2				
24	90183–05807	NUT, SPRING		2				
25	40D–F4780–01	SEAT LOCK ASSY		1				
26	1S8–F4768–00	STOPPER		1				
27	95E32–06012	BOLT, FLANGE DEEP RECESS		2				

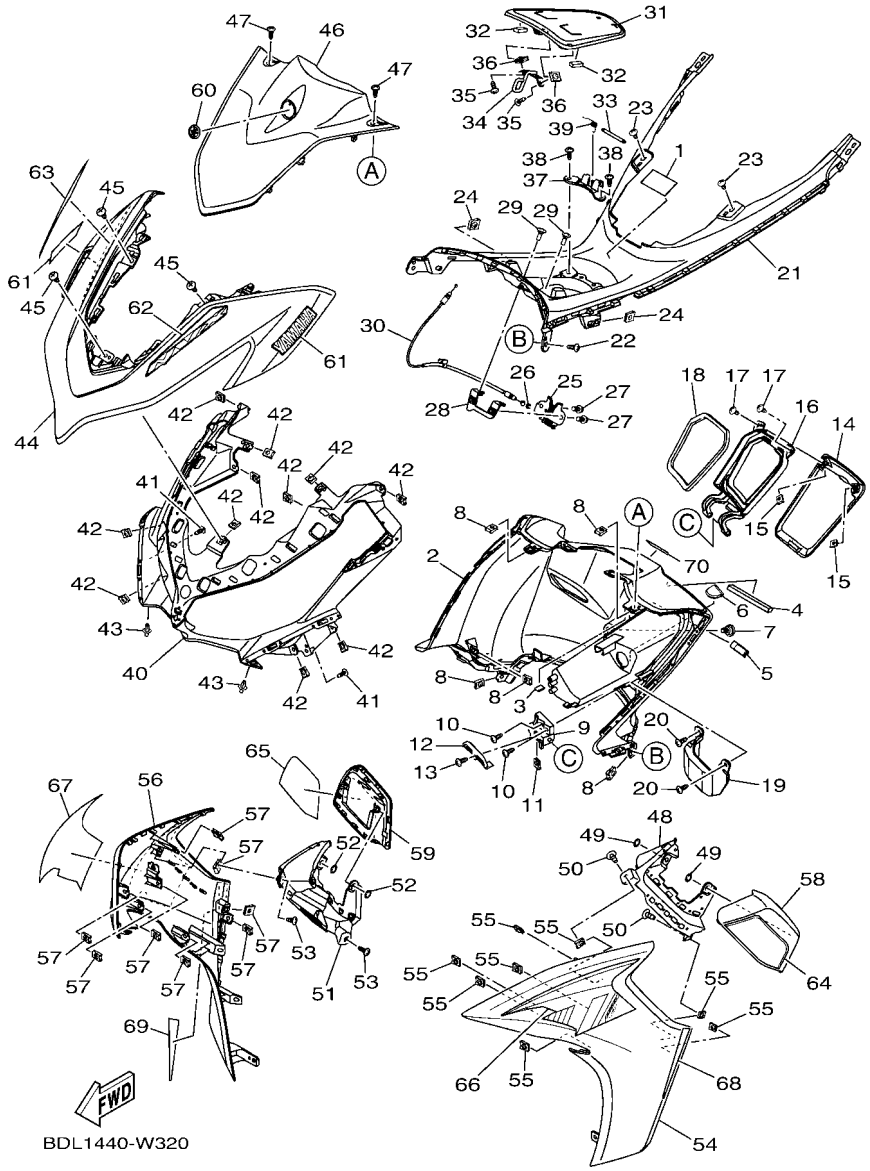

FIG. 32 LEG SHIELD 2

REF. NO.	PART NO.	DESCRIPTION	BDL1	BDL2	BDL4			REMARKS
28	B65–F8357–10	STAY 2		1				
29	90149–05804	SCREW		2				
30	B65–F4494–10	WIRE, PULL		1				
31	BBP–F74A8–00	LID, FUEL		1				
32	90520–10850	DAMPER, PLATE		2				
33	B65–F818A–00	PIN		1				
34	B65–F131C–00	BAR LOCK		1				
35	97702–50012	SCREW, TAPPING		2				
36	90183–05807	NUT, SPRING		2				
37	BBP–F846K–00	COVER, HINGE 1		1				
38	97707–50016	SCREW, TRUSS HEAD TAPPING		2				
39	BBP–F7426–00	SPRING, RETURN		1				
40	BBP–F8311–00	LEG SHIELD 1		1				
41	97702–50012	SCREW, TAPPING		2				
42	90183–05807	NUT, SPRING		11				
43	90269–06816	RIVET		2				
44	BBP–F2865–00–P7	COVER, FRONT		1				UR FOR RM7
	BBP–F2865–00–P8	COVER, FRONT		1				UR FOR CM6
45	97707–50016	SCREW, TRUSS HEAD TAPPING		3				
46	BBN–F286F–00	COVER, FRONT 2		1				
47	90160–05814	SCREW, ROUND TAPPING		2				
48	BBP–F8351–00	BODY, COWLING		1				
49	90183–06815	NUT, SPRING		2				
50	97702–50012	SCREW, TAPPING		2				
51	BBP–F8377–00	BODY, COWLING 2		1				
52	90183–06815	NUT, SPRING		2				
53	97702–50012	SCREW, TAPPING		2				

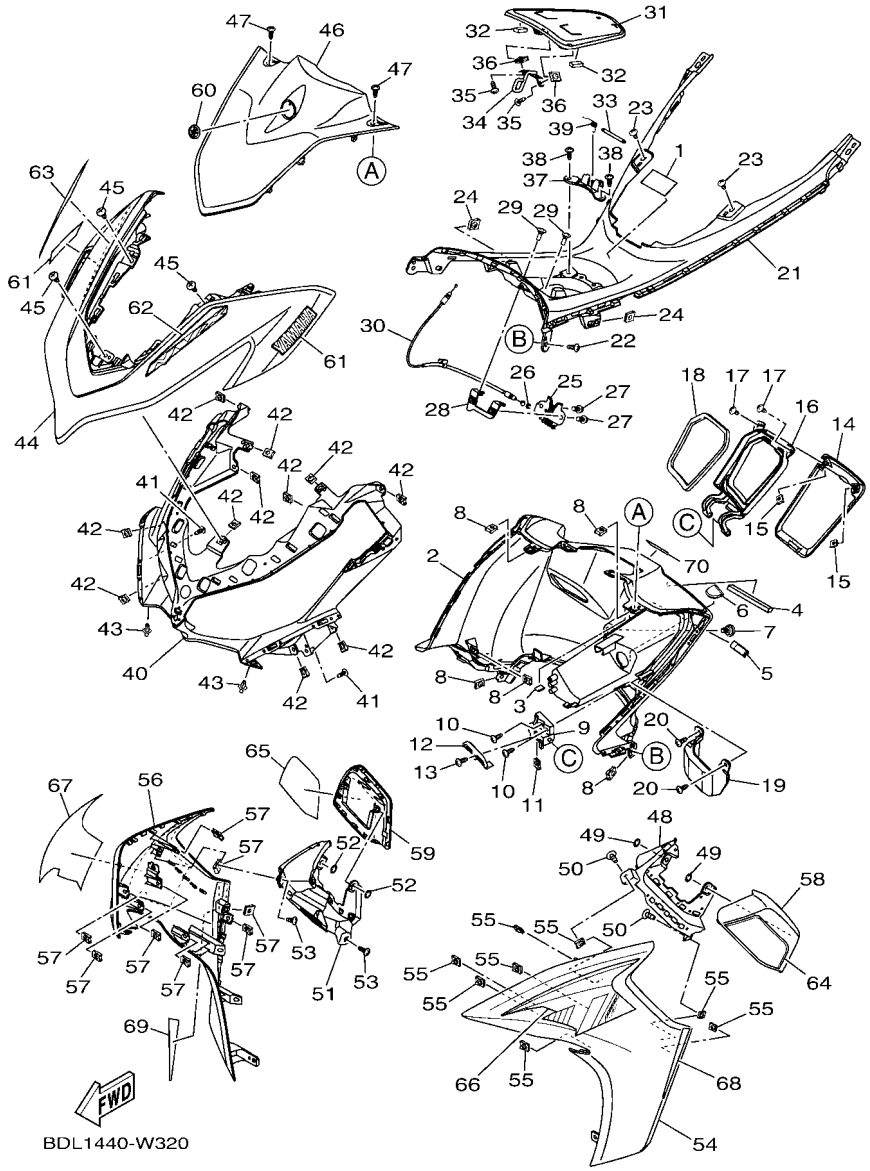

FIG. 32 LEG SHIELD 2

REF. NO.	PART NO.	DESCRIPTION	BDL1	BDL2	BDL4			REMARKS
54	BBP–F835U–00–P7	PANEL 1		1				UR FOR RM7
	BBP–F835U–00–P0	PANEL 1		1				UR MBL2 FOR CM6
55	90183–05807	NUT, SPRING		8				
56	BBP–F835V–00–P7	PANEL 2		1				UR FOR RM7
	BBP–F835V–00–P0	PANEL 2		1				UR MBL2 FOR CM6
57	90183–05807	NUT, SPRING		8				
58	BBP–F8345–00–P8	MOLE 1		1				UR SMX FOR RM7
	BBP–F8345–00–P9	MOLE 1		1				UR FOR CM6
59	BBP–F8346–00–P8	MOLE 2		1				UR SMX FOR RM7
	BBP–F8346–00–P9	MOLE 2		1				UR FOR CM6
60	5P2–F1737–00	EMBLEM		1				
61	99234–00100	EMBLEM, YAMAHA		2				
62	BDL–F8391–10	GRAPHIC 1		1				UR FOR RM7
	BDL–F8391–20	GRAPHIC 1		1				UR FOR CM6
63	BDL–F8392–10	GRAPHIC 2		1				UR FOR RM7
	BDL–F8392–20	GRAPHIC 2		1				UR FOR CM6
64	BDL–F8393–10	GRAPHIC 3		1				UR FOR RM7
	BDL–F8393–20	GRAPHIC 3		1				UR FOR CM6
65	BDL–F8394–10	GRAPHIC 4		1				UR FOR RM7
	BDL–F8394–20	GRAPHIC 4		1				UR FOR CM6
66	BDL–F8398–10	GRAPHIC 5		1				UR FOR RM7
	BDL–F8398–20	GRAPHIC 5		1				UR FOR CM6
67	BDL–F8399–10	GRAPHIC 6		1				UR FOR RM7
	BDL–F8399–20	GRAPHIC 6		1				UR FOR CM6
68	BDL–F839A–00	GRAPHIC 7		1				UR FOR RM7
	BDL–F839A–10	GRAPHIC 7		1				UR FOR CM6
69	BDL–F839E–00	GRAPHIC 8		1				UR FOR RM7

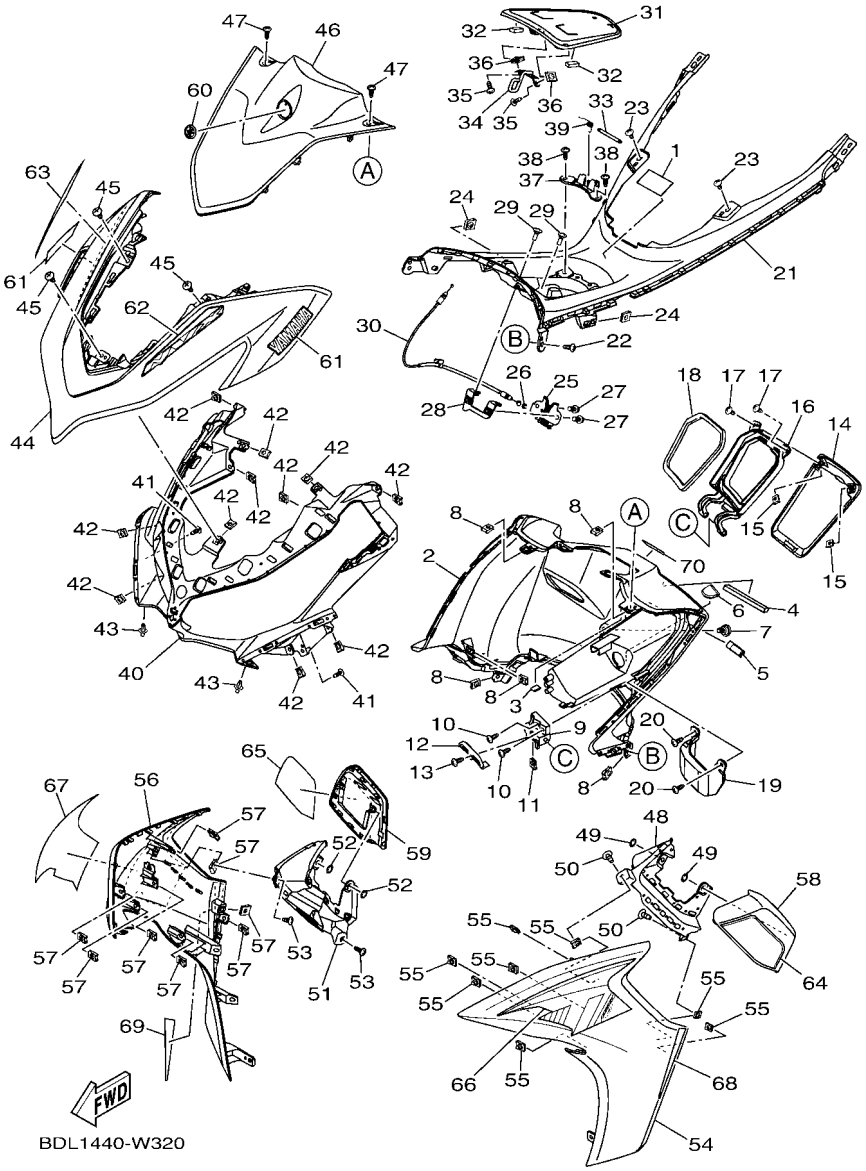

FIG. 32 LEG SHIELD 2

REF. NO.	PART NO.	DESCRIPTION	BDL1	BDL2	BDL4			REMARKS
69	BDL–F839E–10	GRAPHIC 8		1				UR FOR CM6
70	BDL–F834C–00	EMBLEM, 1		1				

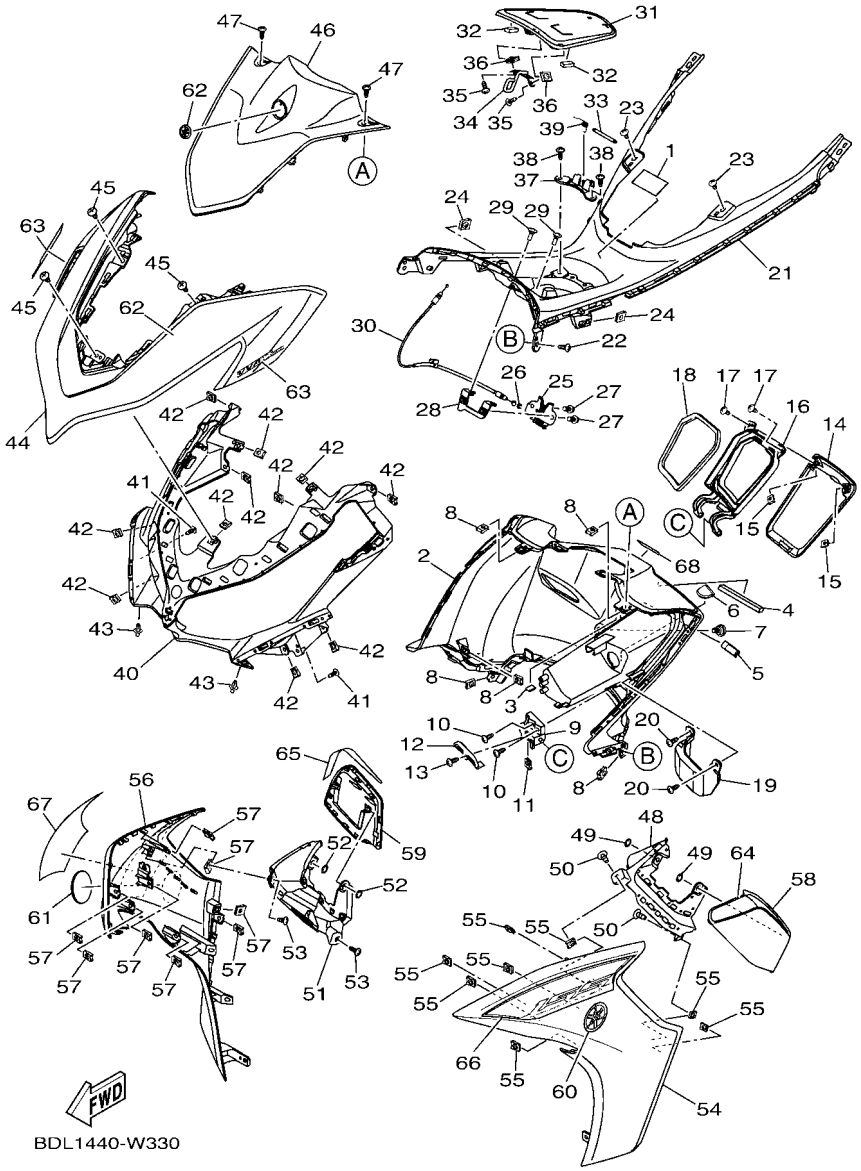

FIG. 33 LEG SHIELD 3

REF. NO.	PART NO.	DESCRIPTION	BDL1	BDL2	BDL4			REMARKS
1	BG3–F1568–00	LABEL, WARNING			1			
2	BBP–F8312–00	LEG SHIELD 2			1			
3	90520–01806	DAMPER, PLATE			1			
4	90520–06822	DAMPER, PLATE			1			
5	BBP–F4618–00	PLATE, LOCK 3			1			
6	BBP–F8349–00	CAP			1			
7	90109–068B3	BOLT			1			
8	90183–05807	NUT, SPRING			5			
9	BBP–F8321–00	STAY 1			1			
10	90160–05012	SCREW, ROUND TAPPING			2			
11	90183–05807	NUT, SPRING			1			
12	BBN–F1796–00	HINGE			1			
13	97707–50016	SCREW, TRUSS HEAD TAPPING			1			
14	BBP–F177E–00	LID			1			
15	90183–05807	NUT, SPRING			2			
16	BBP–F8322–00	STAY 2			1			
17	97702–50012	SCREW, TAPPING			2			
18	90520–06821	DAMPER, PLATE			1			
19	BBP–F8365–00	COVER			1			
20	97707–50016	SCREW, TRUSS HEAD TAPPING			2			
21	BBP–F842M–00	COVER 1			1			
22	97702–50012	SCREW, TAPPING			1			
23	97707–50016	SCREW, TRUSS HEAD TAPPING			2			
24	90183–05807	NUT, SPRING			2			
25	40D–F4780–01	SEAT LOCK ASSY			1			
26	1S8–F4768–00	STOPPER			1			
27	95E32–06012	BOLT, FLANGE DEEP RECESS			2			

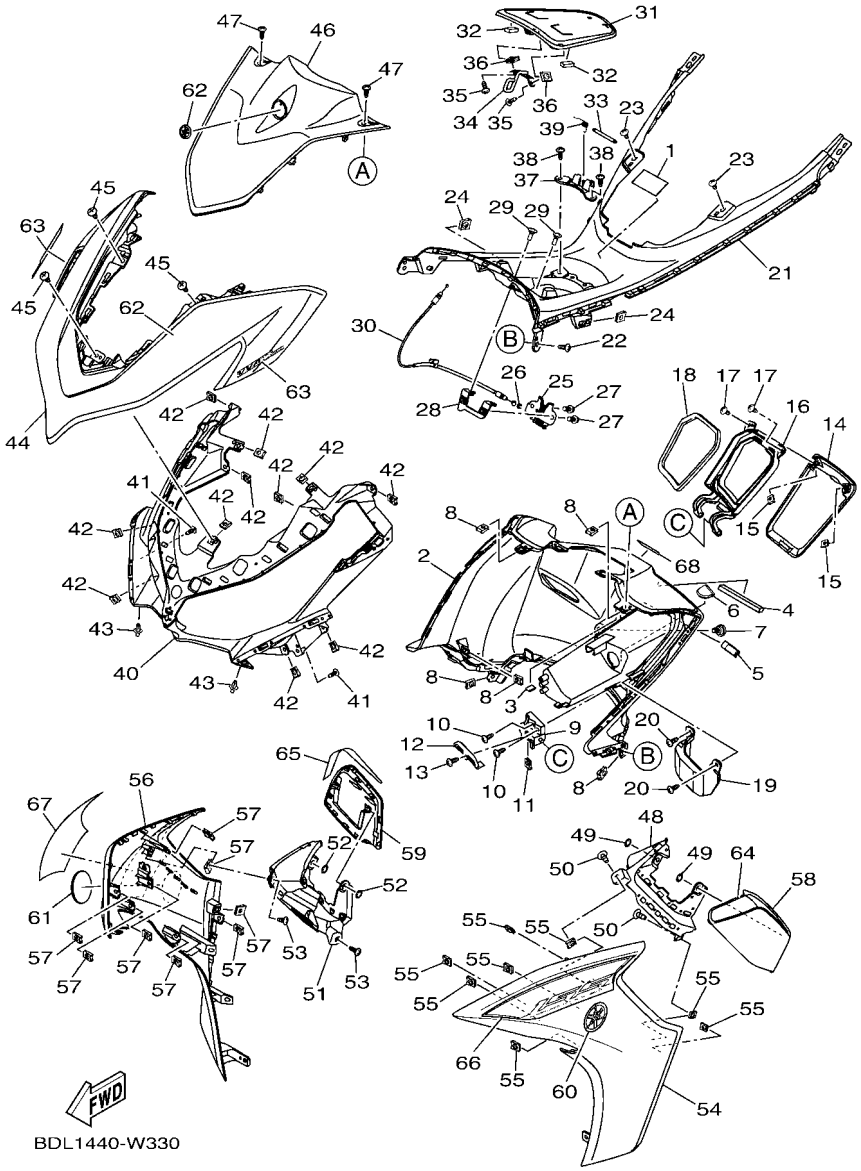

FIG. 33 LEG SHIELD 3

REF. NO.	PART NO.	DESCRIPTION	BDL1	BDL2	BDL4			REMARKS
28	B65–F8357–10	STAY 2			1			
29	90149–05804	SCREW			2			
30	B65–F4494–10	WIRE, PULL			1			
31	BBP–F74A8–00	LID, FUEL			1			
32	90520–10850	DAMPER, PLATE			2			
33	B65–F818A–00	PIN			1			
34	B65–F131C–00	BAR LOCK			1			
35	97702–50012	SCREW, TAPPING			2			
36	90183–05807	NUT, SPRING			2			
37	BBP–F846K–00	COVER, HINGE 1			1			
38	97707–50016	SCREW, TRUSS HEAD TAPPING			2			
39	BBP–F7426–00	SPRING, RETURN			1			
40	BBP–F8311–00	LEG SHIELD 1			1			
41	97702–50012	SCREW, TAPPING			2			
42	90183–05807	NUT, SPRING			11			
43	90269–06816	RIVET			2			
44	BBP–F2865–00–P6	COVER, FRONT			1			DPBMC
45	97707–50016	SCREW, TRUSS HEAD TAPPING			3			
46	BBN–F286F–00	COVER, FRONT 2			1			
47	90160–05814	SCREW, ROUND TAPPING			2			
48	BBP–F8351–00	BODY, COWLING			1			
49	90183–06815	NUT, SPRING			2			
50	97702–50012	SCREW, TAPPING			2			
51	BBP–F8377–00	BODY, COWLING 2			1			
52	90183–06815	NUT, SPRING			2			
53	97702–50012	SCREW, TAPPING			2			
54	BBP–F835U–00–P6	PANEL 1			1			DPBMC

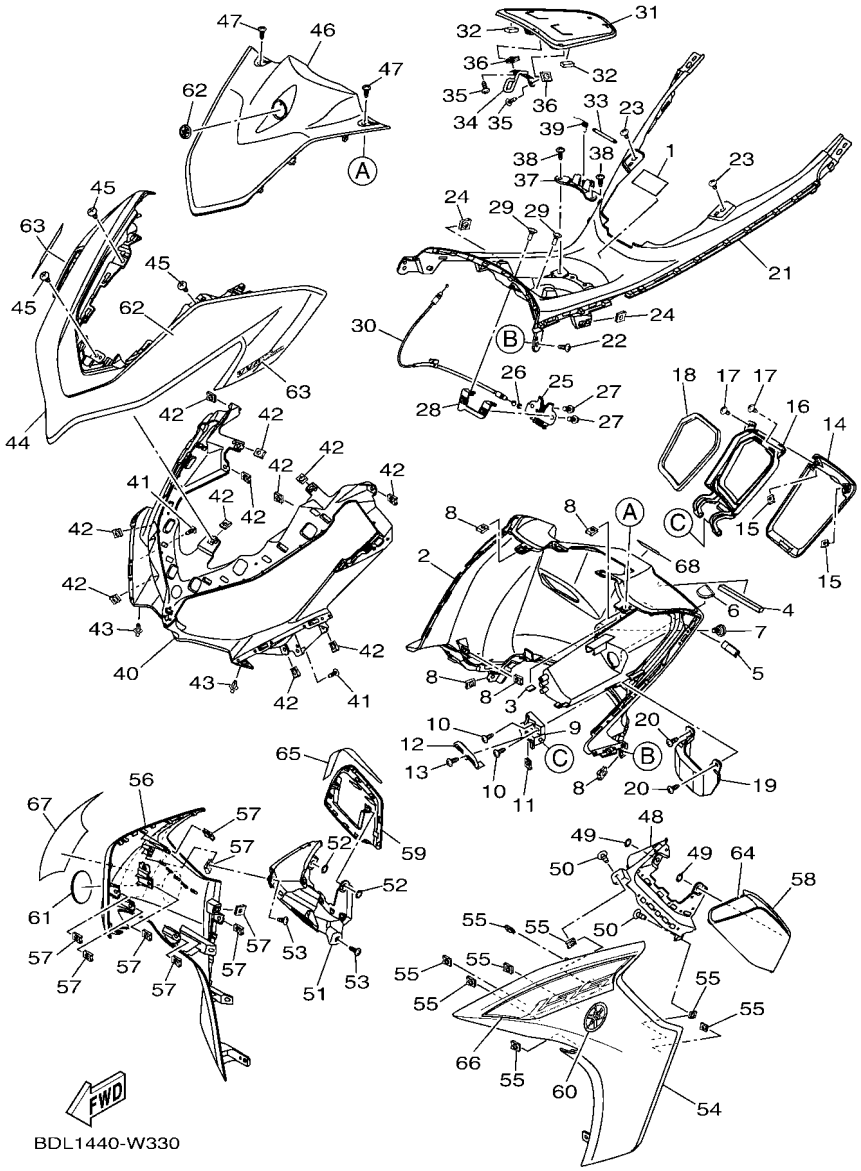

FIG. 33 LEG SHIELD 3

REF. NO.	PART NO.	DESCRIPTION	BDL1	BDL2	BDL4			REMARKS
55	90183–05807	NUT, SPRING			8			
56	BBP–F835V–00–P6	PANEL 2			1			DPBMC
57	90183–05807	NUT, SPRING			8			
58	BBP–F8345–00–P6	MOLE 1			1			DPBMC
59	BBP–F8346–00–P6	MOLE 2			1			DPBMC
60	5P2–F839B–00	EMBLEM 3D			1			
61	5P2–F839B–00	EMBLEM 3D			1			
62	5P2–F1737–00	EMBLEM			1			
63	BDL–F8391–30	GRAPHIC 1			2			
64	BDL–F8393–30	GRAPHIC 3			1			
65	BDL–F8394–30	GRAPHIC 4			1			
66	BDL–F8398–30	GRAPHIC 5			1			
67	BDL–F8399–30	GRAPHIC 6			1			
68	BDL–F834C–00	EMBLEM, 1			1			

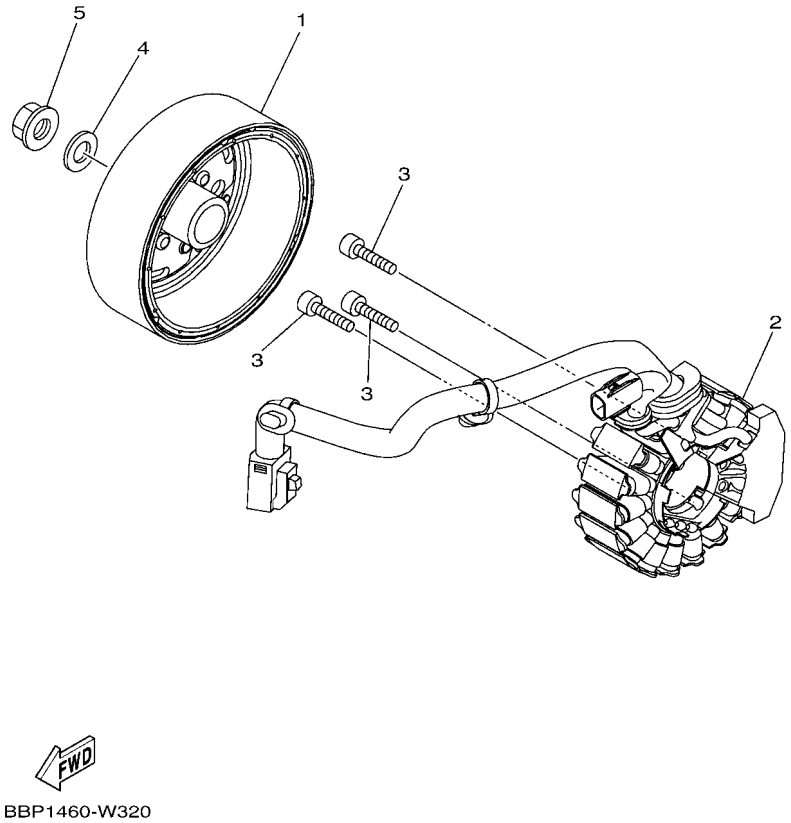

FIG. 34 GENERATOR

REF. NO.	PART NO.	DESCRIPTION	BDL1	BDL2	BDL4			REMARKS
1	B6H–H1450–00	ROTOR ASSY	1	1	1			
2	B6H–H1410–00	STATOR ASSY	1	1	1			
3	90110–06880	BOLT, HEXAGON SOCKET HEAD	3	3	3			
4	90201–12688	WASHER, PLATE	1	1	1			
5	90179–12004	NUT	1	1	1			

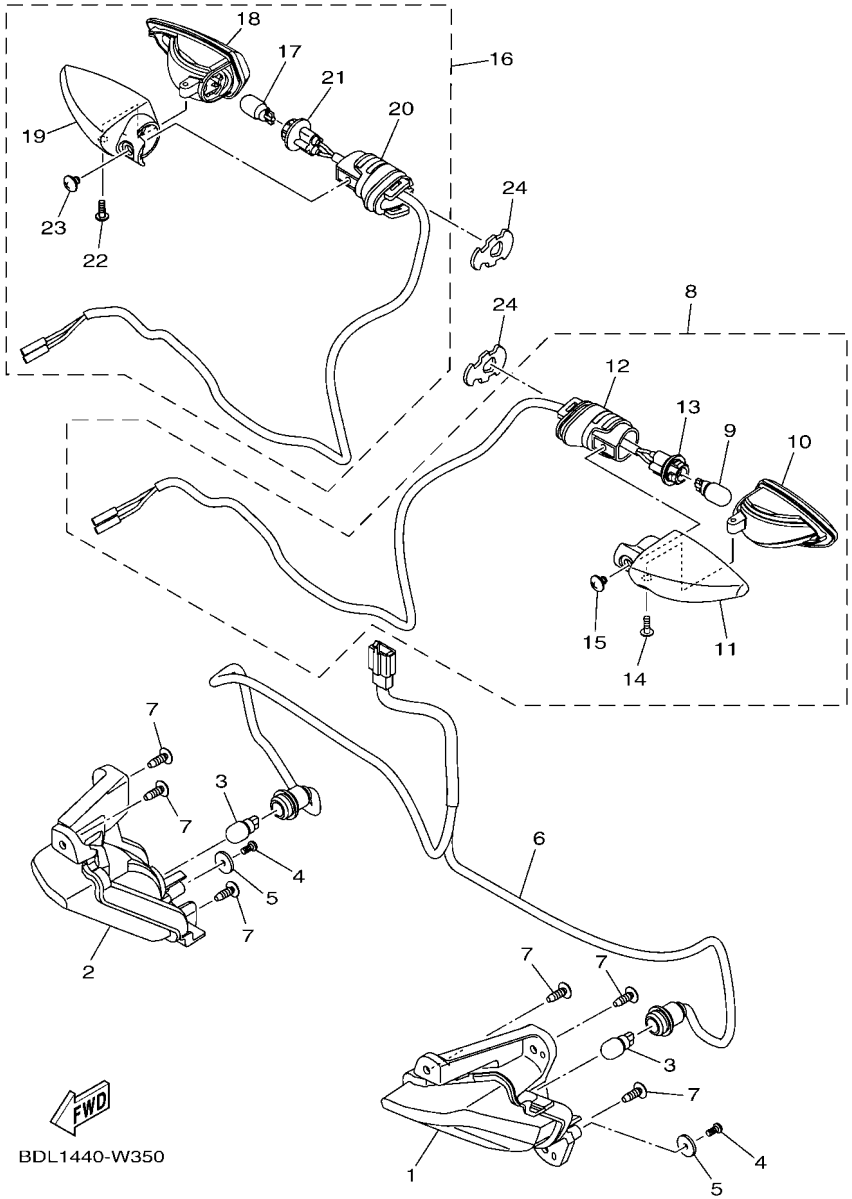

FIG. 35 FLASHER LIGHT

REF. NO.	PART NO.	DESCRIPTION	BDL1	BDL2	BDL4			REMARKS
1	B63–H3310–00	FRONT FLASHER LIGHT ASSY 1	1	1	1			
2	B63–H3320–00	FRONT FLASHER LIGHT ASSY 2	1	1	1			
3	2CB–H3311–00	BULB, FLASHER (12V-10W)	2	2	2			
4	97702–40612	SCREW, TAPPING	2	2	2			
5	1PB–H4127–00	WASHER, SPECIAL	2	2	2			
6	B63–H331E–01	CORD ASSY	1	1	1			
7	97702–50012	SCREW, TAPPING	6	6	6			
8	BG3–H3330–00	REAR FLASHER LIGHT ASSY 1	1	1	1			
9	55D–H3311–00	.BULB, FLASHER (12V-10W)	1	1	1			
10	55D–H333A–00	.LENS COMP 1	1	1	1			
11	55D–H3323–00	.BODY	1	1	1			
12	55D–H3328–00	.STAY, FLASHER 2	1	1	1			
13	BG3–H333E–00	.CORD ASSY	1	1	1			
14	55D–H3333–00	.SCREW, LENS FITTING	1	1	1			
15	55D–H3358–00	.SCREW, SPECIAL	1	1	1			
16	BG3–H3340–00	REAR FLASHER LIGHT ASSY 2	1	1	1			
17	55D–H3311–00	.BULB, FLASHER (12V-10W)	1	1	1			
18	55D–H334A–00	.LENS COMP 2	1	1	1			
19	55D–H332M–00	.BODY 2	1	1	1			
20	55D–H3328–00	.STAY, FLASHER 2	1	1	1			
21	BG3–H334E–00	.CORD ASSY	1	1	1			
22	55D–H3333–00	.SCREW, LENS FITTING	1	1	1			
23	55D–H3358–00	.SCREW, SPECIAL	1	1	1			
24	1VP–H3318–00	STAY, FLASHER 1	2	2	2			

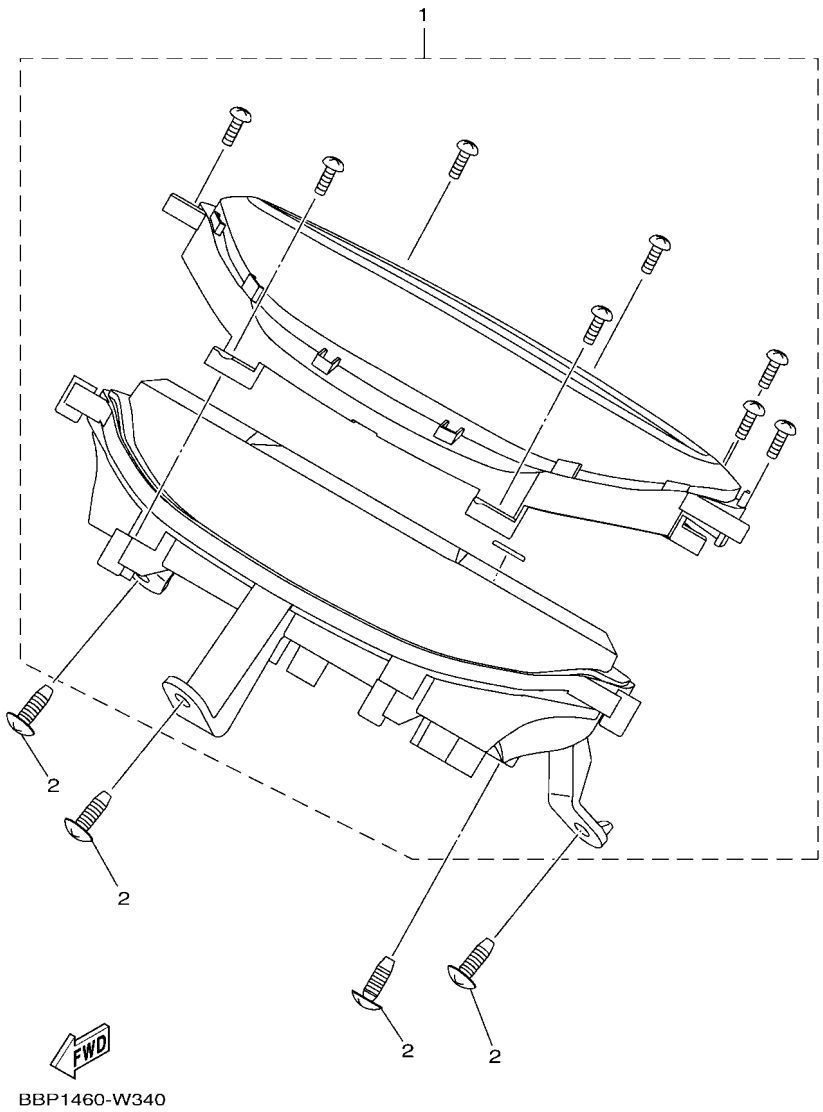

FIG. 36 METER

REF. NO.	PART NO.	DESCRIPTION	BDL1	BDL2	BDL4			REMARKS
1	BBP–H3500–40	METER ASSY	1		1			
	BBP–H3500–30	METER ASSY		1				
2	97707–50016	SCREW, TRUSS HEAD TAPPING	4	4	4			

FIG. 37 HEADLIGHT

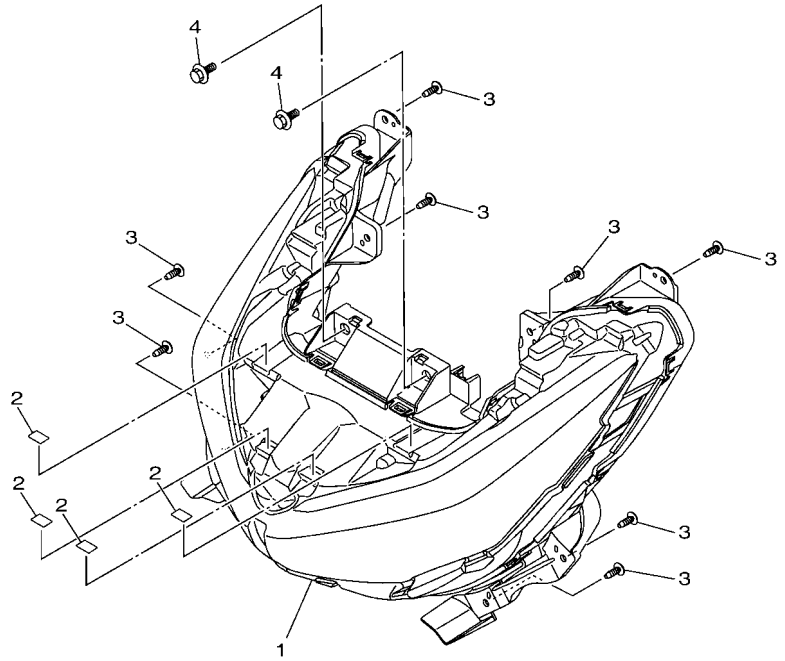

BBP1460-W350

REF. NO.	PART NO.	DESCRIPTION	BDL1	BDL2	BDL4			REMARKS
1	BBN–H4300–00	HEADLIGHT ASSY	1	1	1			
2	90520–01806	DAMPER, PLATE	4	4	4			
3	97707–50016	SCREW, TRUSS HEAD TAPPING	8	8	8			
4	90109–068B5	BOLT	2	2	2			

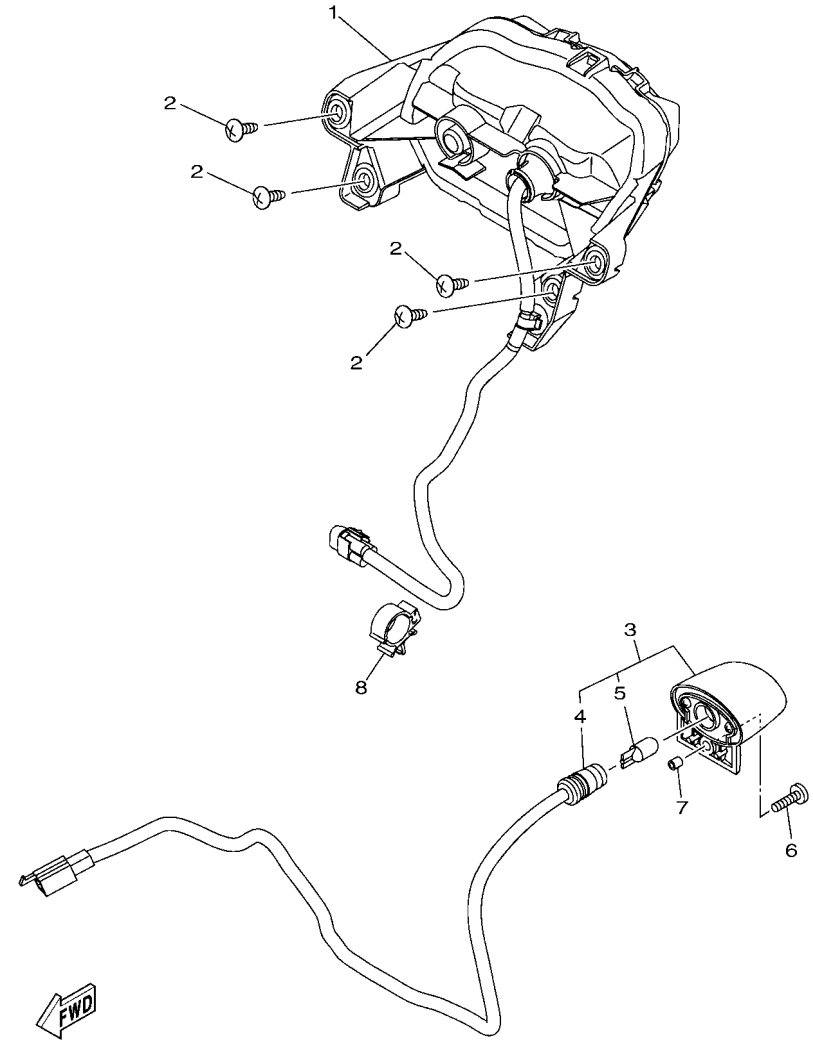

FIG. 38 TAILLIGHT

REF. NO.	PART NO.	DESCRIPTION	BDL1	BDL2	BDL4			REMARKS
1	BBP–H4710–00	TAILLIGHT UNIT ASSY	1	1	1			
2	97707–50016	SCREW, TRUSS HEAD TAPPING	4	4	4			
3	BBN–H4740–00	LICENCE LIGHT ASSY	1	1	1			
4	1WD–H4547–00	.CORD, LICENCE LIGHT	1	1	1			
5	2ND–H4744–00	.BULB (12V-5W)	1	1	1			
6	98907–04014	SCREW, BIND	1	1	1			
7	90445–05004	HOSE	1	1	1			
8	90464–16006	CLAMP	1	1	1			

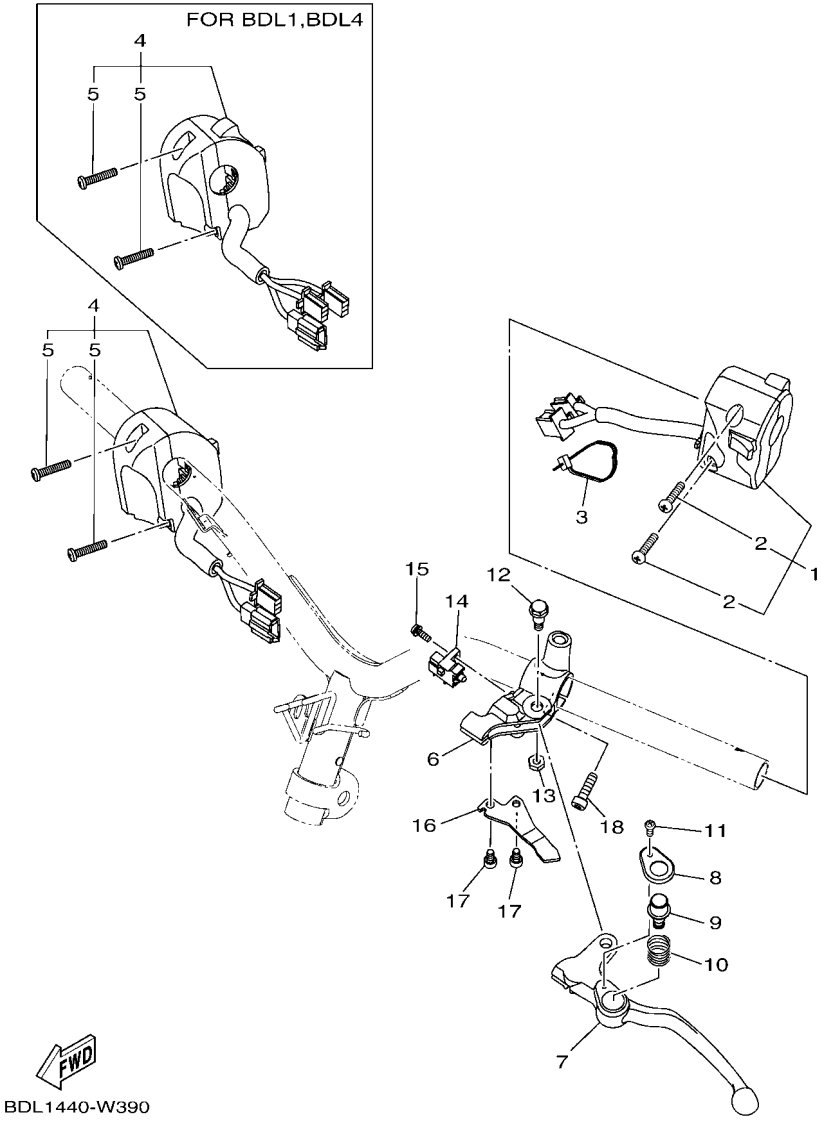

FIG. 39 HANDLE SWITCH & LEVER

REF. NO.	PART NO.	DESCRIPTION	BDL1	BDL2	BDL4			REMARKS
1	B6H–H3972–00	SWITCH, HANDLE 4	1	1	1			
2	98507–05025	.SCREW, PAN HEAD	2	2	2			
3	90464–36800	CLAMP	1	1	1			
4	B3F–H3973–01	SWITCH, HANDLE 3	1		1			
	BBP–H3975–01	SWITCH, HANDLE 2		1				
5	98507–05025	.SCREW, PAN HEAD	2	2	2			
6	B65–H2911–00	HOLDER, LEVER 1	1	1	1			
7	1LB–H3912–00	LEVER 1	1	1	1			
8	1LB–H3935–00	COVER	1	1	1			
9	1LB–H3967–00	PIN, LOCK 1	1	1	1			
10	40D–H3962–00	SPRING	1	1	1			
11	40D–H396X–00	SCREW, LEVER FITTING	1	1	1			
12	90109–06798	BOLT	1	1	1			
13	95602–06100	NUT, SELF-LOCKING	1	1	1			
14	B0R–H2530–10	STOP SWITCH ASSY	1	1	1			
15	97602–04312	SCREW, PAN HEAD WITH WASHER	1	1	1			
16	B65–H2556–00	DAMPER, STOPPER	1	1	1			
17	91332–05010	BOLT	2	2	2			
18	91337–06020	BOLT	1	1	1			

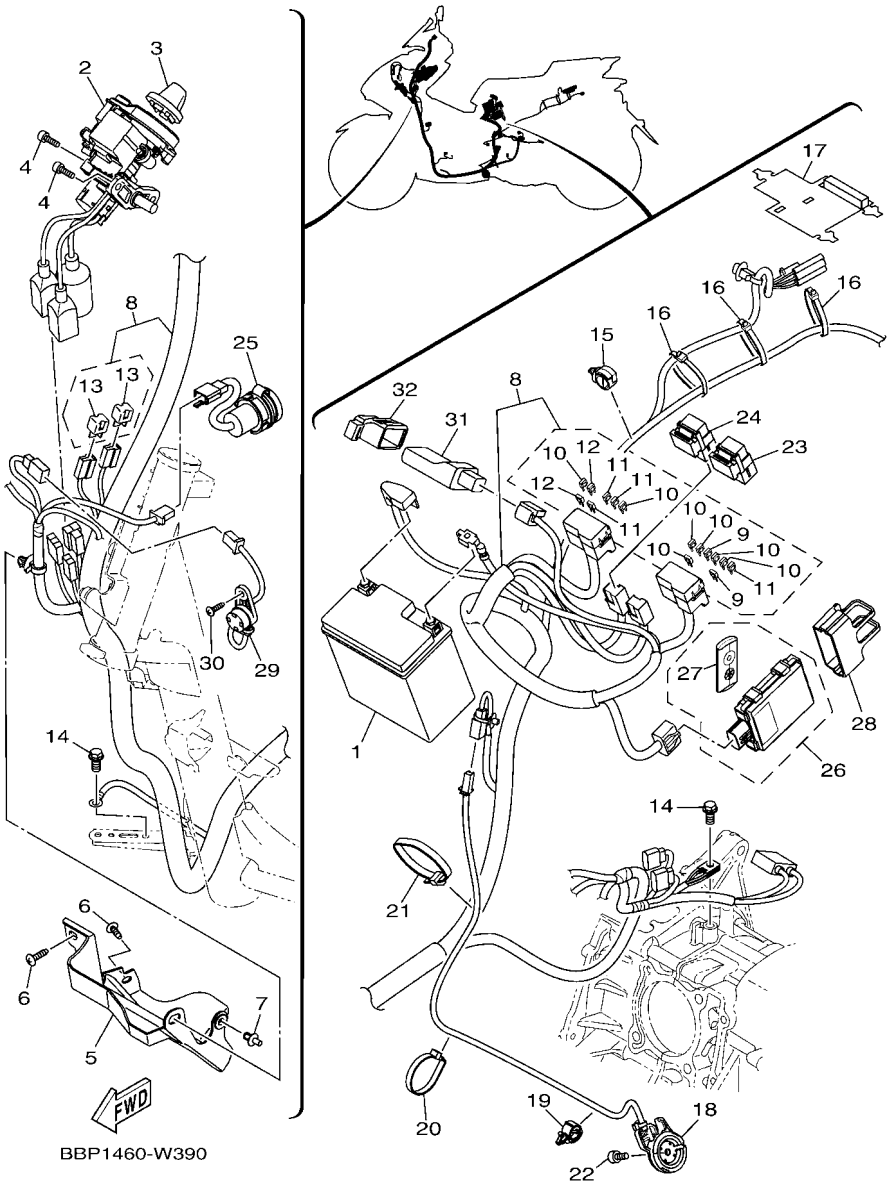

FIG. 40 ELECTRICAL 1

REF. NO.	PART NO.	DESCRIPTION	BDL1	BDL2	BDL4			REMARKS
1	BC1–H2100–00	BATTERY ASSY (YUASA YTZ7V)	1		1			
2	BDL–H2501–00	MAIN SWITCH STEERING LOCK	1		1			
3	B5D–H276E–00	KNOB COMP.	1		1			
4	90111–06162	BOLT,HEX. SOCKET BUTTON	2		2			
5	BBP–H2568–00	COVER, MAIN SWITCH	1		1			
6	97707–50016	SCREW, TRUSS HEAD TAPPING	2		2			
7	90269–06816	RIVET	1		1			
8	BDL–H2590–10	WIRE HARNESS ASSY	1		1			
9	B65–H2151–60	.FUSE (30A)	2		2			
10	B65–H2151–00	.FUSE (7.5A)	7		7			
11	B65–H2151–90	.FUSE(5A)	4		4			
12	1LB–H2151–00	.FUSE (10A)	2		2			
13	3WP–81980–00	.DIODE ASSY	2		2			
14	95E32–06012	BOLT, FLANGE DEEP RECESS	2		2			
15	90464–13249	CLAMP	1		1			
16	90464–70800	CLAMP	3		3			
17	B65–H7229–01	BAND	1		1			
18	B65–H2566–01	SWITCH, SIDE STAND	1		1			
19	90464–13249	CLAMP	1		1			
20	90464–50800	CLAMP	1		1			
21	90464–65801	CLAMP	1		1			
22	90110–06888	BOLT, HEXAGON SOCKET HEAD	1		1			
23	BK6–H1950–00	RELAY ASSY	1		1			
24	B3F–H1950–10	RELAY ASSY	1		1			
25	B6H–H254B–00	TERMINAL COMP.	1		1			
26	BX9–H6260–01	REMOTE CONTROL UNIT ASSY	1		1			
27	B2T–H6261–00	.XMTR. COMP.	1		1			

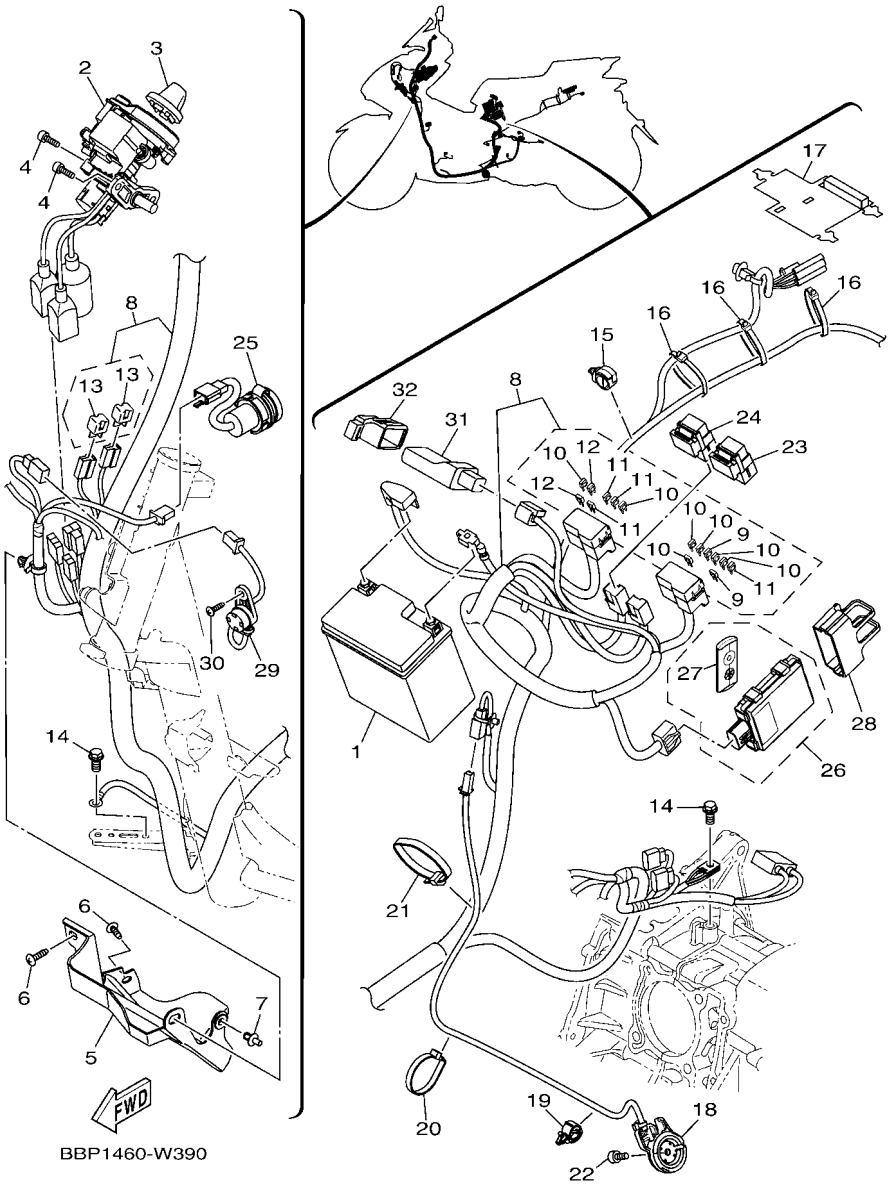

FIG. 40 ELECTRICAL 1

REF. NO.	PART NO.	DESCRIPTION	BDL1	BDL2	BDL4			REMARKS
28	B65–H5546–00	BAND	1		1			
29	B3F–H3383–00	BUZZER	1		1			
30	97707–50016	SCREW, TRUSS HEAD TAPPING	1		1			
31	B6Y–H5810–01	COMMUNICATION CONT. UNIT ASSY	1		1			
32	BBP–H5546–00	BAND	1		1			

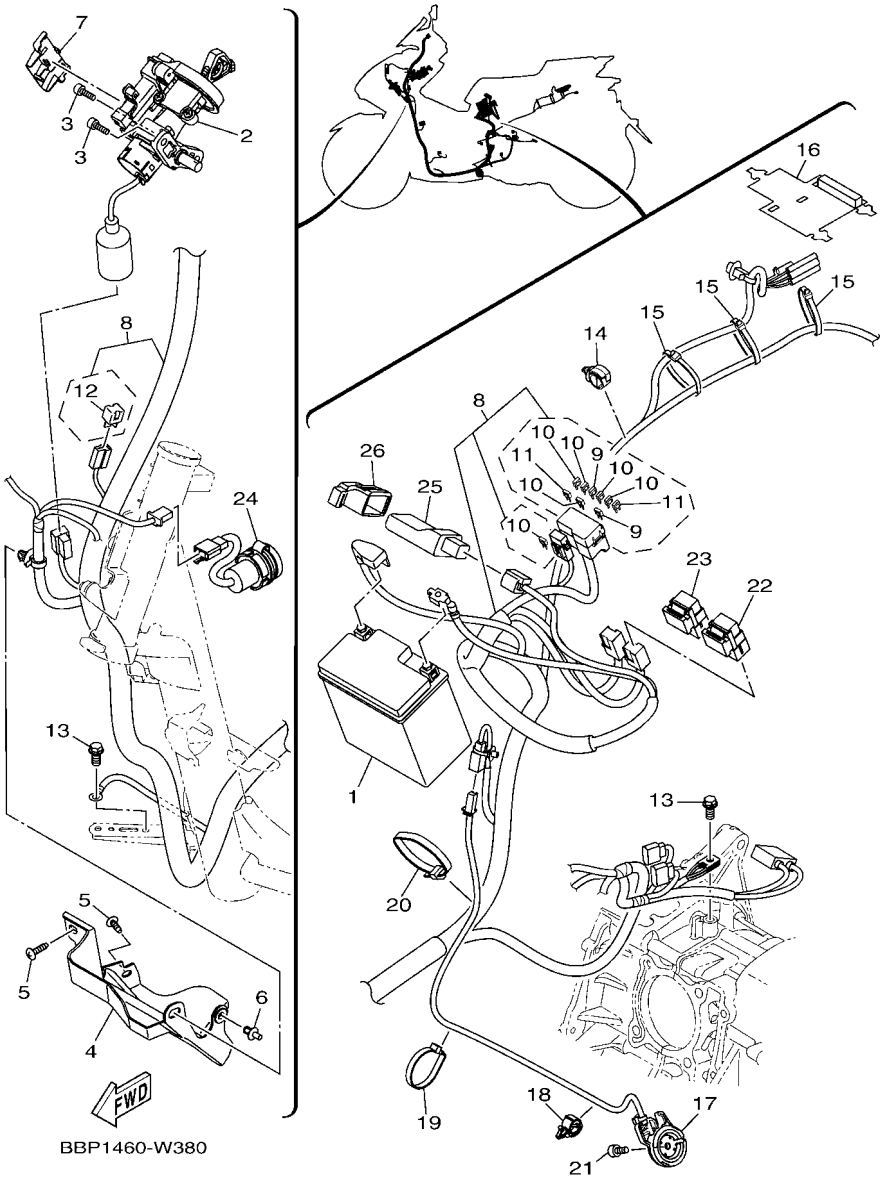

FIG. 41 ELECTRICAL 2

REF. NO.	PART NO.	DESCRIPTION	BDL1	BDL2	BDL4			REMARKS
1	BBM–H2100–00	BATTERY ASSY (YUASA YTZ6V)		1				
2	BDL–H252E–00	MAIN SWITCH COMP.		1				
3	90111–06162	BOLT,HEX. SOCKET BUTTON		2				
4	BBP–H2568–00	COVER, MAIN SWITCH		1				
5	97707–50016	SCREW, TRUSS HEAD TAPPING		2				
6	90269–06816	RIVET		1				
7	B65–H255D–00	COVER, MAIN SWITCH 2		1				
8	BDL–H2590–00	WIRE HARNESS ASSY		1				
9	B65–H2151–60	.FUSE (30A)		2				
10	B65–H2151–00	.FUSE (7.5A)		6				
11	B65–H2151–90	.FUSE(5A)		2				
12	3WP–81980–00	.DIODE ASSY		1				
13	95E32–06012	BOLT, FLANGE DEEP RECESS		2				
14	90464–13249	CLAMP		1				
15	90464–70800	CLAMP		3				
16	B65–H7229–01	BAND		1				
17	B65–H2566–01	SWITCH, SIDE STAND		1				
18	90464–13249	CLAMP		1				
19	90464–50800	CLAMP		1				
20	90464–65801	CLAMP		1				
21	90110–06888	BOLT, HEXAGON SOCKET HEAD		1				
22	BK6–H1950–00	RELAY ASSY		1				
23	B3F–H1950–10	RELAY ASSY		1				
24	B6H–H254B–00	TERMINAL COMP.		1				
25	B6Y–H5810–01	COMMUNICATION CONT. UNIT ASSY		1				
26	BBP–H5546–00	BAND		1				

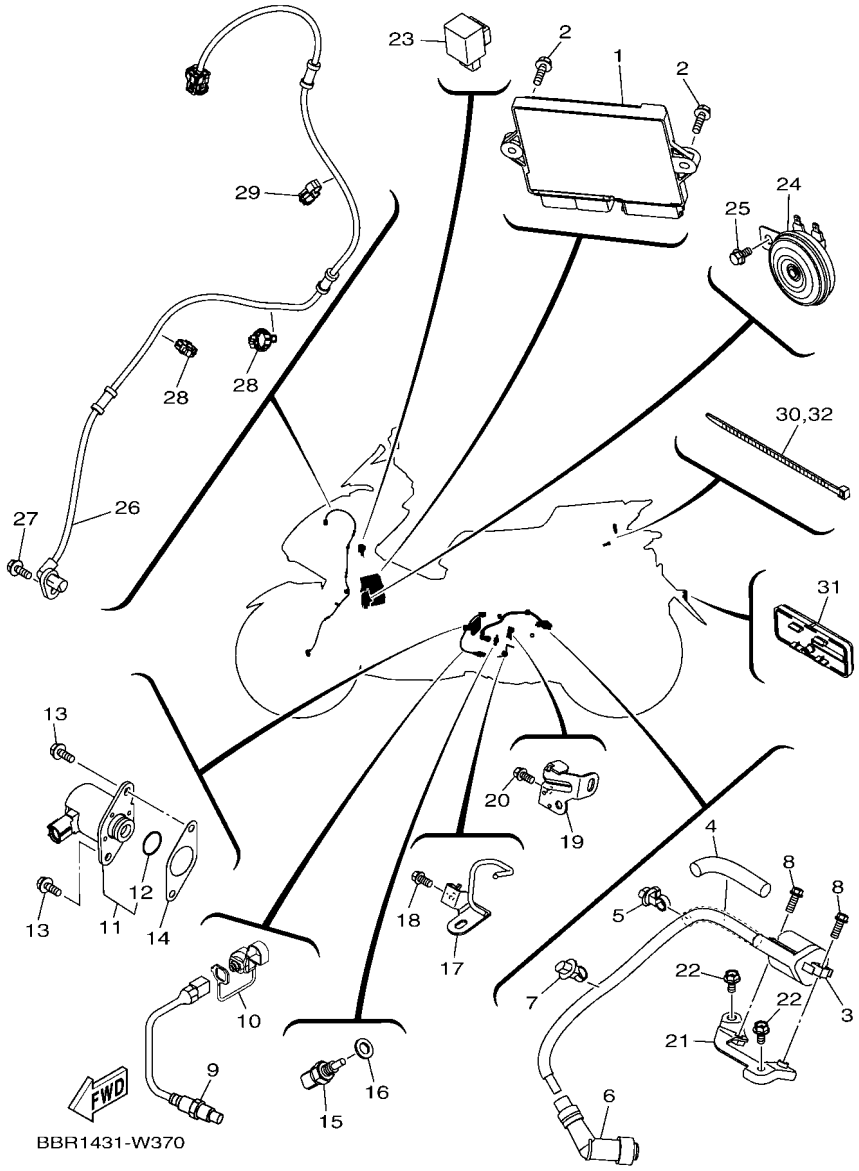

FIG. 42 ELECTRICAL 3

REF. NO.	PART NO.	DESCRIPTION	BDL1	BDL2	BDL4			REMARKS
1	BDL–H594A–11	STARTER GEN. CONT. UNIT ASSY	1		1			
	BDL–H594A–01	STARTER GEN. CONT. UNIT ASSY		1				
2	95D32–06020	BOLT, FLANGE DEEP RECESS	2	2	2			
3	BBP–H2310–00	IGNITION COIL ASSY	1	1	1			
4	BBP–H2351–00	TUBE, CORD	1	1	1			
5	90464–14809	CLAMP	1	1	1			
6	2DP–H2370–00	PLUG CAP ASSY	1	1	1			
7	90464–25009	CLAMP	1	1	1			
8	90105–068C7	BOLT, FLANGE	2	2	2			
9	BBR–H592A–00	SENSOR, OXYGEN	1	1	1			
10	BBR–H816G–00	COVER CONNECTER	1	1	1			
11	BK6–H6110–00	SOLENOID	1	1	1			
12	BK6–H1847–00	.O-RING	1	1	1			
13	95D32–06016	BOLT, FLANGE DEEP RECESS	2	2	2			
14	2DP–H1861–00	GASKET	1	1	1			
15	54P–H3591–00	THERMO UNIT	1	1	1			
16	90430–10806	GASKET	1	1	1			
17	B6H–E5142–00	GUIDE 1	1	1	1			
18	95E37–06012	BOLT, FLANGE DEEP RECESS	1	1	1			
19	B6H–E5143–00	GUIDE 2	1	1	1			
20	95E37–06012	BOLT, FLANGE DEEP RECESS	1	1	1			
21	BBP–E5544–00	STAY 1	1	1	1			
22	90105–068D4	BOLT, FLANGE	2	2	2			
23	3XV–83350–22	FLASHER RELAY ASSY	1	1	1			
24	1WD–H3371–00	HORN	1	1	1			
25	95D02–06012	BOLT, FLANGE DEEP RECESS	1	1	1			
26	B63–H5970–01	WHEEL SENSOR ASSY, FRONT	1	1	1			

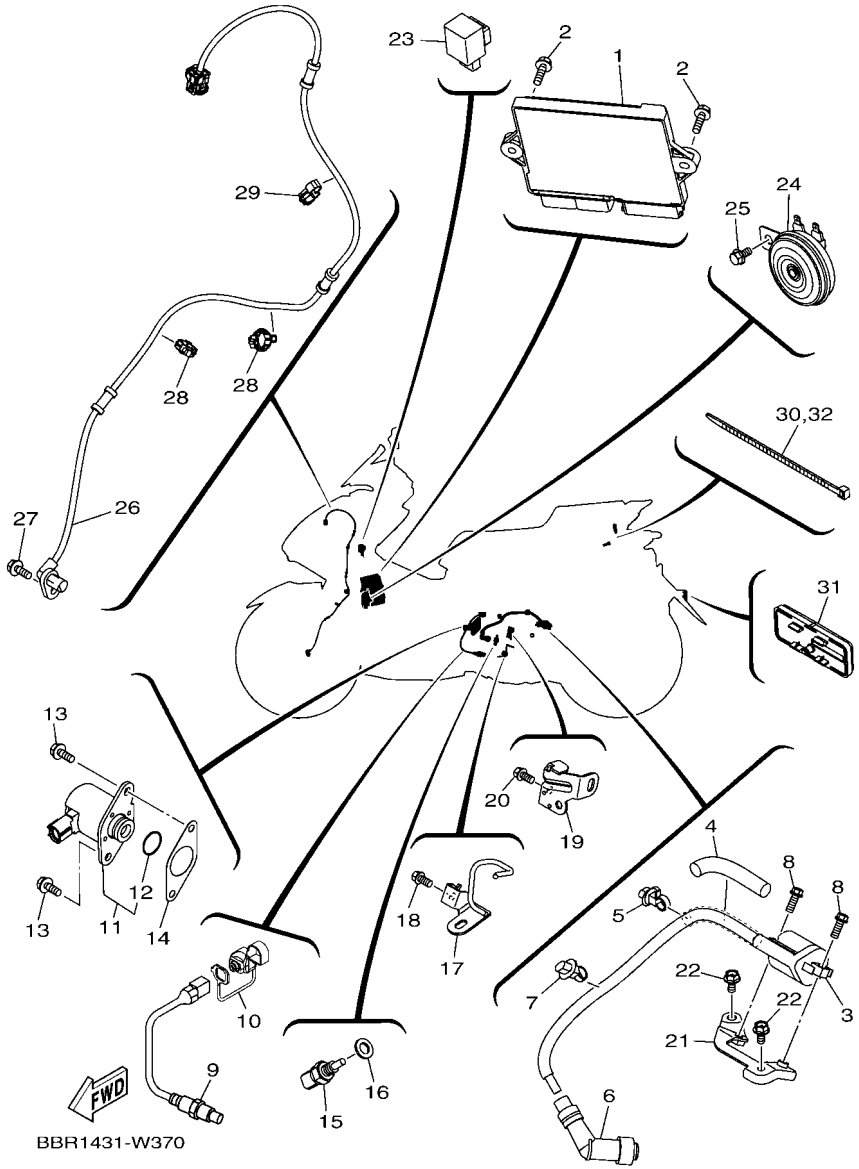

FIG. 42 ELECTRICAL 3

REF. NO.	PART NO.	DESCRIPTION	BDL1	BDL2	BDL4			REMARKS
27	95D32–06016	BOLT, FLANGE DEEP RECESS	1	1	1			
28	90464–14803	CLAMP	2	2	2			
29	90464–14810	CLAMP	1	1	1			
30	90464–50800	CLAMP	1	1	1			
31	55D–H5130–00	REAR REFLECTOR ASSY	1	1	1			
32	90464–50800	CLAMP	2	2	2			

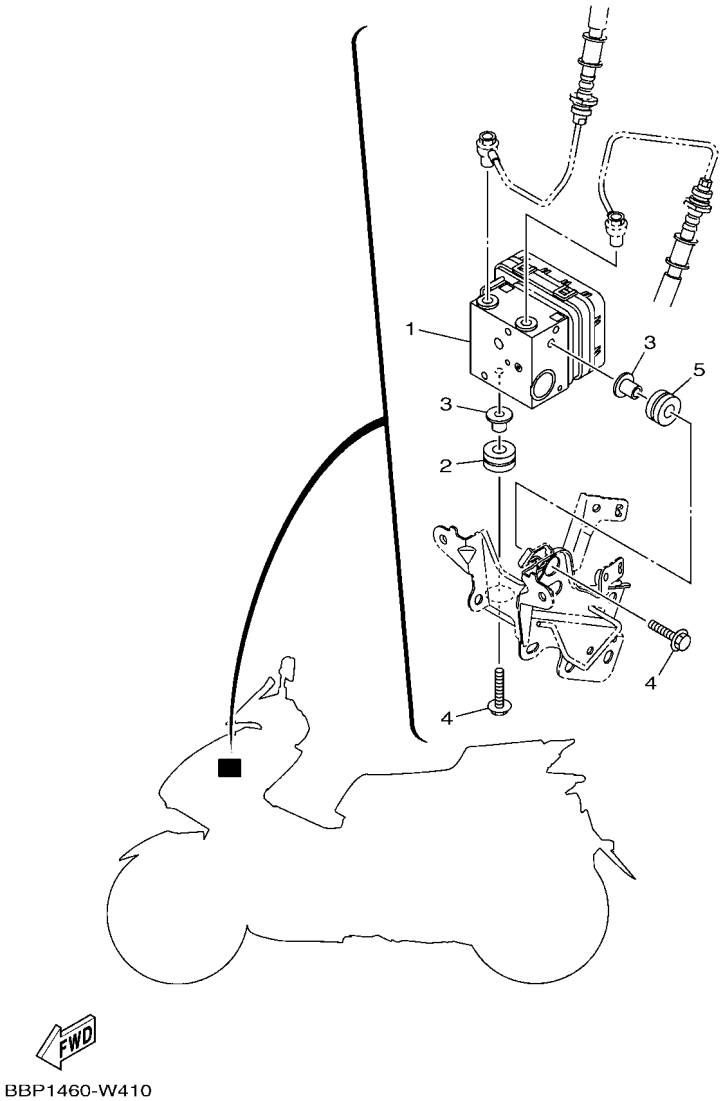

FIG. 43 ELECTRICAL 4

REF. NO.	PART NO.	DESCRIPTION	BDL1	BDL2	BDL4			REMARKS
1	B3F–H5930–08	HYDRAULIC UNIT ASSY	1		1			
2	90480–14816	GROMMET	1		1			
3	90387–068N8	COLLAR	2		2			
4	95817–06020	BOLT, FLANGE	2		2			
5	90480–14004	GROMMET	1		1			

PART NO.	REF. NO.
52S–12439–00	6 – 2
3RW–25889–00	29 – 6
36Y–2589H–00	28 – 6
	29 – 5
3WP–81980–00	40 – 13
	41 – 12
3XV–83350–22	42 – 23
BBB–E1102–00	1 – 1
2DP–E111F–00	3 – 18
B63–E111F–00	3 – 18
2DP–E1133–10	1 – 2
2DP–E1165–00	1 – 8
BBP–E1166–00	8 – 35
2DP–E1169–00	1 – 9
2DP–E1181–00	1 – 21
B6H–E1185–00	5 – 4
2DP–E1191–00	1 – 7
B3F–E1193–00	1 – 15
B6H–E1311–00	1 – 25
2DP–E132G–00	1 – 13
B6H–E1351–00	1 – 26
BB8–E1391–00	1 – 18
BB8–E1392–00	1 – 19
B6H–E1400–10	2 – 1
B63–E1603–00	2 – 9
BK6–E1631–00	2 – 6
2DP–E1633–00	2 – 7
2DP–E1651–00	2 – 4
B63–E1681–00	2 – 2
BK6–E2111–00	3 – 1
BB8–E2113–01	3 – 4
2DP–E2117–00	3 – 6
B63–E2117–00	3 – 6
5TL–E2118–00	3 – 5
54P–E2119–00	3 – 3
B3F–E2121–00	3 – 2
50C–E2126–00	3 – 7
2DP–E2150–00	3 – 8
B65–E2156–00	3 – 16
B63–E2157–00	4 – 6
5YP–E2157–01	4 – 6
33S–E2159–01	3 – 9
	3 – 14
B6H–E2160–00	3 – 13
B6H–E2170–00	4 – 1
B6H–E2170–10	4 – 1
2PV–E2210–01	4 – 11
B6H–E2213–00	4 – 12

PART NO.	REF. NO.
B6H–E2223–00	5 – 2
BB8–E2226–00	3 – 11
1DB–E2228–00	4 – 10
B65–E2231–00	4 – 8
B6H–E2241–00	4 – 9
2DP–E2279–00	3 – 12
B63–E2279–00	3 – 12
BBP–E2280–00	4 – 4
B6H–E2288–00	4 – 5
B63–E22A2–00	6 – 6
B6H–E240A–01	6 – 4
2DP–E2410–00	6 – 1
B6H–E2422–00	5 – 1
B63–E2439–00	6 – 7
B6H–E2439–00	5 – 3
B6H–E2450–00	5 – 5
B65–E2462–02	6 – 5
BBN–E2467–00	6 – 25
B6H–E2481–00	6 – 17
B6H–E2482–00	6 – 18
B6H–E2483–00	6 – 19
B6H–E2491–00	6 – 20
B65–E2611–00	6 – 27
5ST–E2615–00	6 – 9
B6H–E2621–01	6 – 21
5ST–E2843–00	6 – 10
B63–E2843–00	6 – 8
B6H–E3300–01	7 – 1
54P–E3411–00	7 – 4
2DP–E3556–00	8 – 12
B6H–E3585–00	8 – 1
B65–E3750–10	8 – 13
2PV–E3761–00	8 – 6
5LW–E3769–00	10 – 15
2PV–E3770–00	8 – 5
BBP–E3907–00	22 – 5
BBP–E3907–10	22 – 5
54P–E3915–00	22 – 6
54P–E3938–00	8 – 9
B65–E3971–00	22 – 4
54P–E4137–00	8 – 10
BBP–E4146–00	8 – 4
54P–E4147–00	8 – 7
5CA–E4147–00	8 – 8
54P–E416A–00	8 – 18
B6H–E4199–00	8 – 2
54P–E4243–00	8 – 15
54P–E4335–00	8 – 16

PART NO.	REF. NO.
B6H–E4411–10	8 – 20
B6H–E4412–10	8 – 21
B6H–E4435–00	8 – 31
B6H–E4437–00	8 – 22
5TL–E443E–00	8 – 27
BBP–E443E–00	11 – 6
B5D–E443G–00	8 – 28
B74–E4449–00	8 – 30
B6H–E4451–00	8 – 24
B6H–E4452–00	8 – 25
B6H–E4453–00	8 – 23
2DP–E4613–00	9 – 4
B63–E4613–00	9 – 4
BK7–E4613–00	9 – 4
BBR–E4711–00	9 – 1
B6H–E4718–00	9 – 2
B6H–E5142–00	42 – 17
B6H–E5143–00	42 – 19
B6H–E5150–00	10 – 1
B6H–E5316–00	11 – 14
B6H–E5326–00	11 – 15
B6H–E533C–00	11 – 20
B6H–E533E–00	11 – 22
54P–E5351–01	7 – 3
2DP–E5362–00	10 – 14
5LW–E5363–00	10 – 16
B6H–E5371–00	10 – 29
5LW–E5371–01	11 – 5
B6H–E5373–00	10 – 30
2DP–E5407–00	11 – 11
B6H–E5411–01	11 – 1
BBP–E5421–00	10 – 24
B65–E5423–01	10 – 18
B6H–E5431–00	11 – 8
B6H–E5451–00	11 – 2
B6H–E5461–10	10 – 25
B65–E5472–00	11 – 10
2DP–E5474–00	11 – 13
2DP–E5481–00	11 – 12
B63–E5481–00	11 – 12
2DP–E5495–00	11 – 9
BBP–E5544–00	42 – 21
2DP–E5744–00	12 – 21
B65–E6111–01	13 – 9
B65–E6611–00	12 – 23
B6H–E6620–00	12 – 8
B65–E6626–00	12 – 10
B65–E7211–00	13 – 4

PART NO.	REF. NO.
B65–E7410–00	13 – 1
B65–E7410–30	13 – 1
B65–E7421–00	13 – 3
2DP–E7465–00	12 – 13
2DP–E7465–10	12 – 14
2DP–E7611–00	12 – 7
B65–E7620–00	12 – 1
2DP–E7623–00	12 – 4
B65–E7632–00	12 – 3
B8R–E7641–00	12 – 24
44D–E7653–00	12 – 5
B6H–E7660–00	12 – 11
B74–E7664–00	12 – 15
2DP–E7668–00	12 – 19
B6H–E7670–00	12 – 12
B6H–E7674–00	12 – 6
2DP–E7674–10	12 – 16
B6H–E7678–00	12 – 20
2DP–E7678–10	12 – 22
B65–E7683–00	12 – 17
2DP–E7684–00	12 – 18
BAL–E8179–00	6 – 29
BBP–F1110–00	14 – 1
B65–F113B–00	14 – 11
B65–F117G–00	14 – 8
B65–F117K–00	15 – 21
B65–F131C–00	31 – 34
	32 – 34
	33 – 34
BBP–F1410–00	14 – 6
B65–F1511–00	15 – 1
B65–F1521–00	14 – 28
BBP–F1552–00	15 – 6
B65–F1556–00–PF	15 – 2
B65–F1556–00–PG	15 – 2
B65–F1556–00–PH	15 – 2
B65–F1556–00–PJ	15 – 2
BDL–F1565–00	15 – 24
BDL–F1565–10	15 – 24
BG3–F1568–00	31 – 1
	32 – 1
	33 – 1
BBP–F1611–00	15 – 10
B65–F1621–00	23 – 16
BBP–F162R–00	15 – 15
BBP–F162R–10	15 – 15
B17–F1668–00	23 – 34
BBP–F1711–00	16 – 1

PART NO.	REF. NO.
BBP–F1711–00	17 – 1
	18 – 1
BBP–F171E–00–P5	16 – 21
BBP–F171E–00–P6	18 – 21
BBP–F171E–00–P7	17 – 21
BBP–F171E–00–P8	17 – 21
BBP–F171L–00	30 – 31
BBP–F171M–00	30 – 35
BBP–F171N–00	16 – 13
	17 – 13
	18 – 13
BBP–F171R–00	16 – 17
	17 – 17
	18 – 17
BBP–F171T–00	16 – 23
	17 – 23
	18 – 23
BBP–F171X–00–P5	16 – 22
BBP–F171X–00–P6	18 – 22
BBP–F171X–00–P7	17 – 22
BBP–F171X–00–P8	17 – 22
BBP–F1721–00	16 – 4
	17 – 4
	18 – 4
2DP–F172W–00	30 – 22
BBP–F1731–00–P0	16 – 7
	17 – 7
BBP–F1731–00–P1	17 – 7
BBP–F1731–00–P3	18 – 7
5P2–F1737–00	16 – 44
	17 – 44
	18 – 44
	31 – 62
	32 – 60
	33 – 62
B92–F1737–00	27 – 34
BBN–F173B–00	16 – 47
	16 – 48
BDL–F173E–00	16 – 45
BDL–F173E–10	17 – 45
BDL–F173E–20	17 – 45
BDL–F173E–30	18 – 45
BDL–F173F–00	16 – 46
BDL–F173F–10	17 – 46
BDL–F173F–20	17 – 46
BDL–F173F–30	18 – 46
BBP–F1741–00–P0	16 – 10
	17 – 10

PART NO.	REF. NO.
BBP–F1741–00–P1	17 – 10
BBP–F1741–00–P3	18 – 10
BDL–F174G–00	16 – 49
BDL–F174G–10	17 – 47
BDL–F174G–20	17 – 47
BDL–F174G–30	18 – 47
BDL–F174H–00	16 – 50
BDL–F174H–10	17 – 48
BDL–F174H–20	17 – 48
BDL–F174H–30	18 – 48
BDL–F174J–00	17 – 49
BDL–F174J–10	17 – 49
BDL–F174K–00	17 – 50
BDL–F174K–10	17 – 50
BBP–F177E–00	31 – 14
	32 – 14
	33 – 14
BDL–F1781–00	16 – 51
	16 – 52
BDL–F1781–10	18 – 49
	18 – 50
BBN–F1796–00	31 – 12
	32 – 12
	33 – 12
B65–F1816–00	16 – 38
	17 – 38
	18 – 38
BBP–F1817–00	16 – 39
	17 – 39
	18 – 39
B65–F1871–00	16 – 33
	17 – 33
	18 – 33
1S7–F1875–01	16 – 37
	17 – 37
	18 – 37
BBP–F194U–00	14 – 35
2DP–F2117–00	19 – 6
B65–F2141–00	14 – 12
BBP–F2171–00	19 – 1
B63–F2210–31	19 – 10
B65–F2210–31	19 – 10
B65–F2211–00	19 – 11
4D1–F2216–00	10 – 5
	19 – 2
5MX–F2216–00	10 – 5
	19 – 2
BDL–F221A–00	19 – 12

PART NO.	REF. NO.
BDL–F221B–00	19 – 17
BBP–F2865–00–P5	31 – 44
BBP–F2865–00–P6	33 – 44
BBP–F2865–00–P7	32 – 44
BBP–F2865–00–P8	32 – 44
BBN–F286F–00	31 – 46
	32 – 46
	33 – 46
BBR–F2957–00	16 – 41
	17 – 41
	18 – 41
BBP–F3100–00	21 – 1
BBP–F3102–00	21 – 2
BBP–F3103–00	21 – 18
B65–F3110–00	21 – 6
	21 – 22
1FC–F3111–10	21 – 14
	21 – 30
B65–F3123–00	20 – 11
B65–F3126–00	21 – 3
B65–F312G–00	20 – 10
B65–F3136–00	21 – 19
B63–F3141–00	21 – 13
	21 – 29
5LM–F3144–00	21 – 12
	21 – 28
3AY–F3145–00	21 – 4
	21 – 20
2JG–F3147–00	21 – 15
	21 – 31
5LM–F3152–00	21 – 9
	21 – 25
31B–F3153–00	21 – 16
	21 – 32
5P0–F3156–00	21 – 5
	21 – 21
2JG–F3157–00	21 – 8
	21 – 24
2BU–F3158–00	21 – 10
	21 – 26
B65–F315H–00	21 – 17
B65–F315J–00	21 – 33
B65–F3170–10	21 – 7
	21 – 23
31B–F3181–00	21 – 11
	21 – 27
BBP–F3340–00	21 – 34
4D0–F3346–00	21 – 37

PART NO.	REF. NO.
4FP–F3411–10	21 – 36
4RT–F3411–10	20 – 4
1KL–F3412–10	20 – 1
4RT–F3412–10	20 – 3
5TL–F3416–01	20 – 6
1PA–F3418–00	20 – 9
1SK–F3418–00	20 – 9
1P6–F341E–10	20 – 5
5VL–F341E–10	20 – 2
B63–F3462–00	21 – 35
B65–F384L–00	23 – 12
BBP–F4110–00	22 – 1
B65–F414A–00	22 – 13
5D9–F414G–00	14 – 2
BBP–F414G–00	14 – 7
54P–F414G–10	22 – 8
5D9–F414G–10	14 – 3
	22 – 3
B6H–F419A–00	22 – 14
2DP–F4491–00	22 – 9
B65–F4494–10	31 – 30
	32 – 30
	33 – 30
4YY–F4610–00	22 – 11
4YY–F4612–00	22 – 12
BBP–F4618–00	31 – 5
	32 – 5
	33 – 5
B65–F465E–00	15 – 20
B65–F4705–00	23 – 21
BDL–F470F–00	23 – 2
BBP–F471K–00–P5	16 – 27
BBP–F471K–00–P6	18 – 27
BBP–F471K–00–P7	17 – 27
BBP–F471K–00–P8	17 – 27
B65–F4726–00	23 – 6
2WB–F4727–00	23 – 5
B65–F472J–00	23 – 25
BBP–F472K–00	16 – 29
	17 – 29
	18 – 29
B65–F472T–00	14 – 29
BDL–F4730–00	23 – 1
B63–F4737–00	23 – 10
B65–F4738–00	14 – 31
BBP–F473R–00	23 – 8
BBP–F473R–10	23 – 8
3C1–F4741–00	23 – 3

PART NO.	REF. NO.
B65–F474A–00	23 – 24
B65–F474W–00	23 – 28
BBP–F475M–00	23 – 4
1S8–F4768–00	23 – 23
	31 – 26
	32 – 26
	33 – 26
40D–F4780–01	23 – 21
	31 – 25
	32 – 25
	33 – 25
BBP–F478E–00	23 – 20
B65–F479D–00	23 – 31
B65–F482H–00	15 – 19
B65–F5168–00–33	24 – 1
B65–F5168–00–P0	24 – 1
B65–F5168–00–P4	24 – 1
2DP–F517G–00	24 – 5
B65–F5181–00	24 – 10
5BP–F530K–20	26 – 8
54P–F5326–00	26 – 5
B65–F5336–00	26 – 4
B65–F5338–00–33	26 – 1
B65–F5338–00–P0	26 – 1
B65–F5338–00–P5	26 – 1
5LW–F533A–00	26 – 13
B65–F5351–00	26 – 11
BBP–F5355–00	26 – 12
2BM–F5802–00	25 – 4
5YP–F5803–50	25 – 5
B63–F5805–00	25 – 9
1WD–F5807–00	28 – 2
5P0–F580A–00	29 – 2
B63–F580U–00	25 – 3
2DP–F582U–00	25 – 1
2ND–F5852–00	29 – 4
B63–F5852–00	28 – 3
2ND–F5854–00	28 – 5
	29 – 3
2ND–F5855–00	28 – 7
	29 – 7
5TL–F5867–11	28 – 11
	29 – 8
2ND–F5870–00	29 – 1
B63–F5870–00	28 – 1
B65–F5872–00	29 – 15
B65–F5872–10	29 – 15
B65–F5873–00	28 – 15

PART NO.	REF. NO.
B65–F5873–10	28 – 15
B65–F5874–00	28 – 18
B65–F5874–10	28 – 18
BBP–F5875–00	20 – 12
B65–F5876–00	20 – 14
B65–F587A–10	14 – 24
B65–F5887–00	14 – 22
3RW–F5889–00	28 – 4
2R6–F5916–00	25 – 14
2BM–F5917–00	25 – 6
2BM–F5919–00	25 – 11
2DP–F5920–00	25 – 13
5YP–F5924–00	25 – 12
5YP–F5925–01	25 – 10
5YP–F5937–00	25 – 7
BBP–F6110–00	27 – 1
BBP–F6143–00	27 – 22
BBP–F6145–00	27 – 25
4US–F6199–00	23 – 11
B65–F61AA–00	27 – 30
B92–F6240–00	27 – 6
1VP–F6241–00	27 – 5
B92–F6246–00	27 – 7
B70–F6280–00	27 – 8
B70–F6290–00	27 – 9
BBP–F6301–00	27 – 10
BBP–F6351–00	27 – 16
BBP–F637G–00	27 – 17
BBP–F7111–00	30 – 1
B6H–F7112–00	30 – 2
44D–F7114–00	14 – 16
4YY–F7114–00	30 – 11
54P–F7114–00	30 – 4
54P–F7121–00	10 – 3
B63–F7217–00	30 – 8
B65–F7217–00	30 – 8
BBP–F7311–00	30 – 7
BBP–F7426–00	31 – 39
	32 – 39
	33 – 39
BBP–F7430–00	30 – 41
B65–F7431–00	30 – 42
BBP–F7440–00	30 – 49
B65–F7441–00	30 – 50
BBP–F7452–00	30 – 43
BBP–F7462–00	30 – 51
BBP–F7481–00	30 – 12
BBP–F7483–00	30 – 39

PART NO.	REF. NO.
BBP–F7484–00	30 – 40
BBP–F7488–00	30 – 21
BBP–F74A8–00	31 – 31
	32 – 31
	33 – 31
3AY–F8151–00	23 – 33
B65–F8153–00	23 – 32
B65–F818A–00	31 – 33
	32 – 33
	33 – 33
BBP–F8311–00	31 – 40
	32 – 40
	33 – 40
BBP–F8312–00	31 – 2
	32 – 2
	33 – 2
BBP–F8321–00	31 – 9
	32 – 9
	33 – 9
BBP–F8322–00	31 – 16
	32 – 16
	33 – 16
BBP–F8345–00–P5	31 – 58
BBP–F8345–00–P6	33 – 58
BBP–F8345–00–P8	32 – 58
BBP–F8345–00–P9	32 – 58
BBP–F8346–00–P5	31 – 59
BBP–F8346–00–P6	33 – 59
BBP–F8346–00–P8	32 – 59
BBP–F8346–00–P9	32 – 59
BBP–F8349–00	31 – 6
	32 – 6
	33 – 6
BDL–F834C–00	31 – 69
	32 – 70
	33 – 68
BBP–F8351–00	31 – 48
	32 – 48
	33 – 48
BBP–F8356–00	14 – 20
BBP–F8356–10	14 – 20
B65–F8357–10	31 – 28
	32 – 28
	33 – 28
B65–F8358–10	14 – 26
BBP–F835U–00–P0	32 – 54
BBP–F835U–00–P5	31 – 54
BBP–F835U–00–P6	33 – 54

PART NO.	REF. NO.
BBP–F835U–00–P7	32 – 54
BBP–F835V–00–P0	32 – 56
BBP–F835V–00–P5	31 – 56
BBP–F835V–00–P6	33 – 56
BBP–F835V–00–P7	32 – 56
BBP–F8365–00	31 – 19
	32 – 19
	33 – 19
BBP–F8377–00	31 – 51
	32 – 51
	33 – 51
BDL–F8391–00	31 – 63
BDL–F8391–10	32 – 62
BDL–F8391–20	32 – 62
BDL–F8391–30	33 – 63
BDL–F8392–00	31 – 64
BDL–F8392–10	32 – 63
BDL–F8392–20	32 – 63
BDL–F8393–00	31 – 65
BDL–F8393–10	32 – 64
BDL–F8393–20	32 – 64
BDL–F8393–30	33 – 64
BDL–F8394–00	31 – 66
BDL–F8394–10	32 – 65
BDL–F8394–20	32 – 65
BDL–F8394–30	33 – 65
BDL–F8398–00	31 – 67
BDL–F8398–10	32 – 66
BDL–F8398–20	32 – 66
BDL–F8398–30	33 – 66
BDL–F8399–00	31 – 68
BDL–F8399–10	32 – 67
BDL–F8399–20	32 – 67
BDL–F8399–30	33 – 67
BDL–F839A–00	32 – 68
BDL–F839A–10	32 – 68
5P2–F839B–00	31 – 60
	31 – 61
	33 – 60
	33 – 61
BDL–F839E–00	32 – 69
BDL–F839E–10	32 – 69
BBP–F842M–00	31 – 21
	32 – 21
	33 – 21
BBP–F846K–00	31 – 37
	32 – 37
	33 – 37

PART NO.	REF. NO.
B6H–H1410–00	34 – 2
B6H–H1450–00	34 – 1
BK6–H1847–00	42 – 12
2DP–H1861–00	42 – 14
BK6–H1950–00	40 – 23
	41 – 22
B3F–H1950–10	40 – 24
	41 – 23
BBM–H2100–00	41 – 1
BC1–H2100–00	40 – 1
BBP–H2129–00	23 – 17
1LB–H2151–00	40 – 12
B65–H2151–00	40 – 10
	41 – 10
B65–H2151–60	40 – 9
	41 – 9
B65–H2151–90	40 – 11
	41 – 11
BBP–H2310–00	42 – 3
BBP–H2351–00	42 – 4
2DP–H2370–00	42 – 6
BDL–H2501–00	40 – 2
BDL–H252E–00	41 – 2
B0R–H2530–10	39 – 14
B6H–H254B–00	40 – 25
	41 – 24
B65–H2556–00	39 – 16
B65–H255D–00	41 – 7
B65–H2566–01	40 – 18
	41 – 17
BBP–H2568–00	40 – 5
	41 – 4
BDL–H2590–00	41 – 8
BDL–H2590–10	40 – 8
B5D–H276E–00	40 – 3
B65–H2911–00	39 – 6
B63–H3310–00	35 – 1
2CB–H3311–00	35 – 3
55D–H3311–00	35 – 9
	35 – 17
1VP–H3318–00	35 – 24
B63–H331E–01	35 – 6
B63–H3320–00	35 – 2
55D–H3323–00	35 – 11
55D–H3328–00	35 – 12
	35 – 20
55D–H332M–00	35 – 19
BG3–H3330–00	35 – 8

PART NO.	REF. NO.
55D–H3333–00	35 – 14
	35 – 22
55D–H333A–00	35 – 10
BG3–H333E–00	35 – 13
BG3–H3340–00	35 – 16
55D–H334A–00	35 – 18
BG3–H334E–00	35 – 21
55D–H3358–00	35 – 15
	35 – 23
1WD–H3371–00	42 – 24
B3F–H3383–00	40 – 29
BBP–H3500–30	36 – 1
BBP–H3500–40	36 – 1
BBP–H3559–00–P5	27 – 33
BBP–H3559–00–P6	27 – 33
BBP–H3559–00–P7	27 – 33
BBP–H3559–00–P8	27 – 33
54P–H3591–00	42 – 15
1LB–H3912–00	39 – 7
2PV–H3922–00	28 – 8
	29 – 9
1LB–H3935–00	39 – 8
40D–H3962–00	39 – 10
1LB–H3967–00	39 – 9
40D–H396X–00	39 – 11
B6H–H3972–00	39 – 1
B3F–H3973–01	39 – 4
BBP–H3975–01	39 – 4
2DP–H3980–01	28 – 13
	29 – 12
1PB–H4127–00	35 – 5
BBN–H4300–00	37 – 1
1WD–H4547–00	38 – 4
BBP–H4710–00	38 – 1
BBN–H4740–00	38 – 3
2ND–H4744–00	38 – 5
2FC–H5111–00	19 – 13
	19 – 18
55D–H5130–00	42 – 31
B65–H5546–00	40 – 28
BBP–H5546–00	40 – 32
	41 – 26
B65–H5752–00	22 – 7
B63–H5801–00	8 – 17
B6Y–H5810–01	40 – 31
	41 – 25
BBR–H592A–00	42 – 9
B3F–H5930–08	43 – 1

PART NO.	REF. NO.
BDL–H594A–01	42 – 1
BDL–H594A–11	42 – 1
B63–H5970–01	42 – 26
BK6–H6110–00	42 – 11
BX9–H6260–01	40 – 26
B2T–H6261–00	40 – 27
B65–H7229–01	40 – 17
	41 – 16
BBR–H816G–00	42 – 10
4C9–W0048–00	25 – 8
B65–WE662–00	12 – 9
B65–WE763–00	12 – 2
90101–06046	26 – 15
90105–068C7	42 – 8
90105–068D4	42 – 22
90105–088E3	14 – 18
90105–088H0	19 – 15
	19 – 20
	19 – 22
90105–10283	14 – 14
90105–108B0	27 – 3
90109–06172	15 – 16
90109–06577	28 – 9
	29 – 10
90109–06798	39 – 12
90109–068A4	15 – 5
90109–068B3	31 – 7
	32 – 7
	33 – 7
90109–068B5	15 – 4
	16 – 32
	16 – 35
	17 – 32
	17 – 35
	18 – 32
	18 – 35
	23 – 14
	30 – 15
	30 – 25
	37 – 4
90109–068B9	30 – 6
90109–08232	25 – 2
90110–06378	1 – 24
90110–06846	8 – 19
90110–06880	34 – 3
90110–06888	40 – 22
	41 – 21
90111–06162	40 – 4

PART NO.	REF. NO.
90111–06162	41 – 3
90111–06860	9 – 3
90119–06044	15 – 11
	30 – 14
	30 – 24
90119–06096	15 – 17
90119–068D6	22 – 2
90149–05030	24 – 6
90149–05801	1 – 10
90149–05804	31 – 29
	32 – 29
	33 – 29
90149–08804	19 – 15
	19 – 20
	19 – 22
90149–10805	25 – 15
90150–05806	27 – 31
90160–05012	31 – 10
	32 – 10
	33 – 10
90160–05814	16 – 2
	16 – 5
	16 – 8
	16 – 11
	16 – 15
	16 – 19
	16 – 28
	17 – 2
	17 – 5
	17 – 8
	17 – 11
	17 – 15
	17 – 19
	17 – 28
	18 – 2
	18 – 5
	18 – 8
	18 – 11
	18 – 15
	18 – 19
	18 – 28
	31 – 47
	32 – 47
	33 – 47
90170–05803	3 – 10
	3 – 15
90170–08810	1 – 16
90170–12802	12 – 28

PART NO.	REF. NO.
90179–05802	27 – 32
90179–06835	27 – 21
90179–12004	12 – 27
	34 – 5
90179–25810	20 – 7
90183–04039	15 – 14
90183–05801	27 – 28
90183–05807	14 – 32
	15 – 13
	15 – 18
	16 – 3
	16 – 6
	16 – 9
	16 – 12
	16 – 25
	17 – 3
	17 – 6
	17 – 9
	17 – 12
	17 – 25
	18 – 3
	18 – 6
	18 – 9
	18 – 12
	18 – 25
	23 – 13
	23 – 18
	27 – 2
	27 – 23
	27 – 26
	30 – 18
	30 – 28
	30 – 33
	30 – 37
	31 – 8
	31 – 11
	31 – 15
	31 – 24
	31 – 36
	31 – 42
	31 – 55
	31 – 57
	32 – 8
	32 – 11
	32 – 15
	32 – 24
	32 – 36
	32 – 42

PART NO.	REF. NO.
90183–05807	32 – 55
	32 – 57
	33 – 8
	33 – 11
	33 – 15
	33 – 24
	33 – 36
	33 – 42
	33 – 55
	33 – 57
90183–06800	15 – 12
	15 – 23
90183–06815	31 – 49
	31 – 52
	32 – 49
	32 – 52
	33 – 49
	33 – 52
90183–06818	15 – 3
90185–10011	27 – 4
90185–16800	26 – 16
90201–08859	1 – 17
90201–10118	28 – 17
	28 – 20
	29 – 17
90201–12688	34 – 4
90201–15828	12 – 32
90201–15849	12 – 26
90201–16819	12 – 25
90202–26142	20 – 8
90206–14093	26 – 14
90249–12008	27 – 20
90269–06812	16 – 26
	17 – 26
	18 – 26
90269–06816	15 – 8
	16 – 16
	16 – 20
	17 – 16
	17 – 20
	18 – 16
	18 – 20
	27 – 24
	30 – 32
	30 – 36
	31 – 43
	32 – 43
	33 – 43

PART NO.	REF. NO.
90269–06816	40 – 7
	41 – 6
90280–03017	2 – 5
90340–12813	1 – 3
90340–12816	10 – 10
90380–10800	12 – 30
90387–068N8	43 – 3
90387–08821	14 – 17
90387–08823	6 – 11
90387–08840	23 – 27
	23 – 30
90387–10277	24 – 9
90387–10848	24 – 2
90387–10857	14 – 10
90387–17807	19 – 5
90387–17808	19 – 8
90388–10808	10 – 4
90388–10818	14 – 9
90401–10812	28 – 16
	28 – 19
	29 – 16
90430–06803	1 – 5
	1 – 28
	5 – 9
90430–08804	10 – 13
90430–10806	42 – 16
90430–12803	10 – 11
90445–05004	38 – 7
90450–43805	8 – 34
90464–07805	16 – 43
	17 – 43
	18 – 43
90464–07807	27 – 15
90464–10802	27 – 13
90464–13249	40 – 15
	40 – 19
	41 – 14
	41 – 18
90464–14803	42 – 28
90464–14809	42 – 5
90464–14810	42 – 29
90464–16006	27 – 14
	38 – 8
90464–25009	42 – 7
90464–36800	39 – 3
90464–50800	40 – 20
	41 – 19
	42 – 30

PART NO.	REF. NO.
90464–50800	42 – 32
90464–65801	40 – 21
	41 – 20
90464–70800	40 – 16
	41 – 15
90467–08003	16 – 40
	17 – 40
	18 – 40
90467–10008	10 – 31
90467–11106	11 – 7
90467–11825	8 – 36
	10 – 32
90467–12052	8 – 37
90467–12809	8 – 29
90467–19803	6 – 15
	6 – 16
90467–20806	6 – 14
90480–01559	30 – 13
	30 – 23
90480–14004	43 – 5
90480–14808	16 – 36
	17 – 36
	18 – 36
90480–14816	43 – 2
90480–14833	6 – 12
90501–12743	30 – 44
	30 – 52
90501–16004	7 – 5
90501–16804	27 – 19
90506–12001	26 – 9
90506–15001	26 – 10
90506–20818	30 – 10
90506–40804	30 – 5
90520–01801	27 – 29
90520–01806	31 – 3
	32 – 3
	33 – 3
	37 – 2
90520–02829	14 – 4
	16 – 34
	17 – 34
	18 – 34
90520–03020	15 – 7
90520–03802	30 – 19
	30 – 29
90520–04806	23 – 9
90520–04809	30 – 20
90520–05815	14 – 33

PART NO.	REF. NO.
90520–06821	31 – 18
	32 – 18
	33 – 18
90520–06822	31 – 4
	32 – 4
	33 – 4
90520–08803	14 – 5
90520–10834	14 – 34
90520–10850	16 – 30
	17 – 30
	18 – 30
	30 – 30
	31 – 32
	32 – 32
	33 – 32
90520–10851	11 – 18
90520–10853	6 – 22
90520–10855	6 – 23
	11 – 23
90520–10856	11 – 16
90520–15816	8 – 33
90520–40800	11 – 21
90520–40801	11 – 17
90520–50801	11 – 19
91312–05010	27 – 12
91312–05016	3 – 17
91317–06025	28 – 12
	29 – 13
91332–05010	22 – 10
	39 – 17
91332–06025	8 – 3
91337–06020	39 – 18
91401–25015	30 – 47
	30 – 55
91701–08035	30 – 46
	30 – 54
92012–05016	27 – 11
92012–06010	14 – 23
	14 – 25
92012–08012	14 – 21
93102–08800	1 – 14
93102–20815	13 – 11
93102–22829	10 – 9
93102–24802	10 – 19
93102–32807	13 – 8
93106–20816	24 – 3
93106–28801	19 – 3
93210–07802	26 – 7

PART NO.	REF. NO.
93210–09806	4 – 2
93210–14816	10 – 17
93210–19809	5 – 14
93210–29800	7 – 6
93210–39803	5 – 11
93211–28800	10 – 20
93300–608X0	5 – 7
93306–001X9	4 – 3
93306–252XT	12 – 29
93306–254Y2	13 – 10
93306–255X5	13 – 7
93306–300YF	24 – 4
93306–302YP	13 – 2
93306–303YT	13 – 6
93306–303YV	19 – 4
93306–351Y5	13 – 12
93310–528YK	2 – 3
93450–16115	2 – 8
93501–04830	30 – 45
	30 – 53
93900–00824	24 – 8
	26 – 3
94111–14804	24 – 7
94114–14801	26 – 2
94568–F9096	4 – 7
94700–00415	1 – 20
95022–06020	15 – 22
95027–06020	5 – 8
95302–08600	19 – 16
	19 – 21
95602–06100	28 – 10
	29 – 11
	39 – 13
95602–08200	14 – 19
95602–10200	14 – 13
	14 – 15
	24 – 11
	30 – 9
95612–08618	1 – 6
95702–05500	19 – 14
	19 – 19
95702–06500	23 – 7
95702–08500	9 – 5
95702–10500	26 – 6
95817–06020	43 – 4
95D02–06012	16 – 42
	17 – 42
	18 – 42

PART NO.	REF. NO.
95D02–06012	20 – 13
	20 – 15
	42 – 25
95D32–06010	14 – 27
95D32–06016	6 – 28
	42 – 13
	42 – 27
95D32–06020	42 – 2
95D32–06025	23 – 26
	23 – 29
95D32–06030	6 – 13
	8 – 11
	8 – 32
95D32–08020	30 – 48
	30 – 56
95D32–08035	10 – 12
95D32–10045	9 – 6
95D32–10060	9 – 7
	19 – 9
95D37–06016	19 – 7
95E32–06010	1 – 4
	1 – 27
	23 – 22
95E32–06012	14 – 36
	27 – 18
	31 – 27
	32 – 27
	33 – 27
	40 – 14
	41 – 13
95E32–06014	3 – 19
95E32–06020	4 – 13
	6 – 3
	6 – 26
	10 – 22
95E32–06025	5 – 12
95E32–06030	1 – 11
	10 – 23
95E32–06035	11 – 4
95E32–06045	5 – 13
95E32–06050	6 – 24
95E32–06060	10 – 7
95E32–06110	10 – 8
95E32–08035	10 – 28
95E32–08045	10 – 27
95E37–06012	22 – 15
	42 – 18
	42 – 20

PART NO.	REF. NO.
97602–04312	28 – 14
	29 – 14
	39 – 15
97702–40612	35 – 4
97702–50012	16 – 14
	16 – 18
	17 – 14
	17 – 18
	18 – 14
	18 – 18
	30 – 17
	30 – 27
	30 – 34
	30 – 38
	31 – 17
	31 – 22
	31 – 35
	31 – 41
	31 – 50
	31 – 53
	32 – 17
	32 – 22
	32 – 35
	32 – 41
	32 – 50
	32 – 53
	33 – 17
	33 – 22
	33 – 35
	33 – 41
	33 – 50
	33 – 53
	35 – 7
97707–50016	14 – 30
	15 – 9
	16 – 24
	16 – 31
	17 – 24
	17 – 31
	18 – 24
	18 – 31
	23 – 15
	23 – 19
	27 – 27
	30 – 16
	30 – 26
	31 – 13
	31 – 20

PART NO.	REF. NO.
97707–50016	31 – 23
	31 – 38
	31 – 45
	32 – 13
	32 – 20
	32 – 23
	32 – 38
	32 – 45
	33 – 13
	33 – 20
	33 – 23
	33 – 38
	33 – 45
	36 – 2
	37 – 3
	38 – 2
	40 – 6
	40 – 30
	41 – 5
97707–50025	8 – 26
98502–05020	7 – 2
98502–06012	8 – 14
98507–05025	39 – 2
	39 – 5
98907–04014	38 – 6
99002–09600	30 – 3
99009–08400	5 – 6
99009–25400	13 – 5
99009–35700	12 – 31
99234–00100	32 – 61
99480–03012	10 – 2
99530–08012	1 – 12
	5 – 10
99530–10114	1 – 22
	1 – 23
	10 – 6
	10 – 21
	10 – 26
	11 – 3