YAMAHA

PARTS CATALOGUE

MNM3 VPBC5 CM6 RM7

T135-5 (55DB) MALAYSIA
T135-5 (55DC) MALAYSIA

YAMAHA GENUINE Parts & Accessories

1W55D-440E1

( )

T135-5
PARTS CATALOGUE
©2021 by Yamaha Motor Co., Ltd.
1st edition, January 2021
All rights reserved.
Any reprinting or unauthorized use
without the written permission of
Yamaha Motor Co., Ltd.
is expressly prohibited.
Printed in Japan.

FOREWORD

This Parts Catalogue is related to the parts for the model(s) on the cover page. When you are ordering replacement parts, please refer to this Parts Catalogue and quote both part numbers and part names correctly.

1. Modifications or additions which have been made after the issue of the Parts Catalogue will be announced in the Parts News.
   It is advisable that you make the necessary corrections to the Parts Catalogue according to the Parts News.

2. Abbreviations
   The following abbreviations are used in this Parts Catalogue.

   "UR" Use specified parts number.

   "UN" Use as many as needed.

   "AP" Alternate Parts

   "LM" Locally Made (Parts need to be ordered locally)

   "F#" Frame No. (Applicable machine No.)

   "O/S" Over Size

3. The number of components for assembly
   - Parts, which are to be supplied in an assembly, are listed with a dot (.) in front of the part name as shown below.
   - The numeral appearing to the right of each component part indicates the quantity of parts for each assembly unit.

PART NO.	DESCRIPTION	Q'TY	REMARKS
2F5–83310–60	FRONT FLASHER LIGHT ASSY	2	
115–83311–60	.BULB (6V–18W)	1	

4. Applicable colours of graphics are represented in the "REMARKS" as shown below.

PART NO.	DESCRIPTION	Q'TY	REMARKS
2N4–24110–00–X5	FUEL TANK COMP.	2	MXR
3J1–24240–10	.GRAPHIC, FUEL TANK	1	FOR MXR

5. Note that the illustrations for reference in finding parts numbers are not to be used for assembling. When assembling, please use the applicable service manual.

6. The asterisk (*) before a reference number indicates modified items after the first edition.

7. Applicable Serial No.

Frame Serial No.

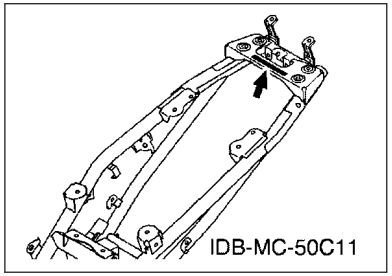

Engine Serial No.

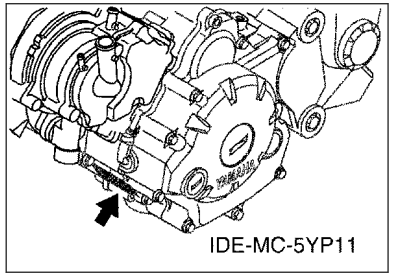

8. Applicable Colour Code (The (*) mark shows Model colour.)

Abbreviation	Colour Name	Colour Code
CM6(*)	CYAN METALLIC 6	1344
MBL2	MAT BLACK 2	0582
MDOM2	MAT DULL ORANGE METALLIC 2	1851
MNM3(*)	MAT GRAY METALLIC 3	1278
MS1	MAT SILVER 1	1160
RM7(*)	RED METALLIC 7	1218
SMX	BLACK METALLIC X	0903
VPBC5(*)	VIVID PURPLISH BLUE COCKTAIL 5	1177
YB	YAMAHA BLACK	0033

9. Applicable Starting Serial No.

Frame Serial No.

Serial No.	Name Of Q'ty Column	Model Code

Engine Serial No.

Serial No.	Name Of Q'ty Column	Model Code

CONTENTS

ENGINE

CYLINDER HEAD....1
CRANKSHAFT & PISTON....2
VALVE....3
CAMSHAFT & CHAIN....4
WATER PUMP....5
RADIATOR & HOSE....6
OIL PUMP....7
INTAKE....8
CARBURETOR....10
EXHAUST....12
CRANKCASE....13
CRANKCASE COVER 1....14
STARTER....15
STARTER CLUTCH....16
CLUTCH....17
TRANSMISSION....19
SHIFT CAM & FORK....21
SHIFT SHAFT....22

CHASSIS

FRAME....23
FENDER....24
SIDE COVER....25
SIDE COVER 2....28
REAR ARM & SUSPENSION....30
STEERING....31
FRONT FORK....32
FUEL TANK....33
SEAT....34
FRONT WHEEL....36
FRONT BRAKE CALIPER....37
REAR WHEEL....38
STEERING HANDLE & CABLE....40
FRONT MASTER CYLINDER....42
STAND & FOOTREST....43
LEG SHIELD....45
LEG SHIELD 2....48
LEG SHIELD 3....51
GENERATOR....52
STARTING MOTOR....53
FLASHER LIGHT....54
METER....55
HEADLIGHT....56
TAILLIGHT....57
HANDLE SWITCH & LEVER....58
ELECTRICAL 1....59
ELECTRICAL 2....60

INDEX

NUMERICAL INDEX....61

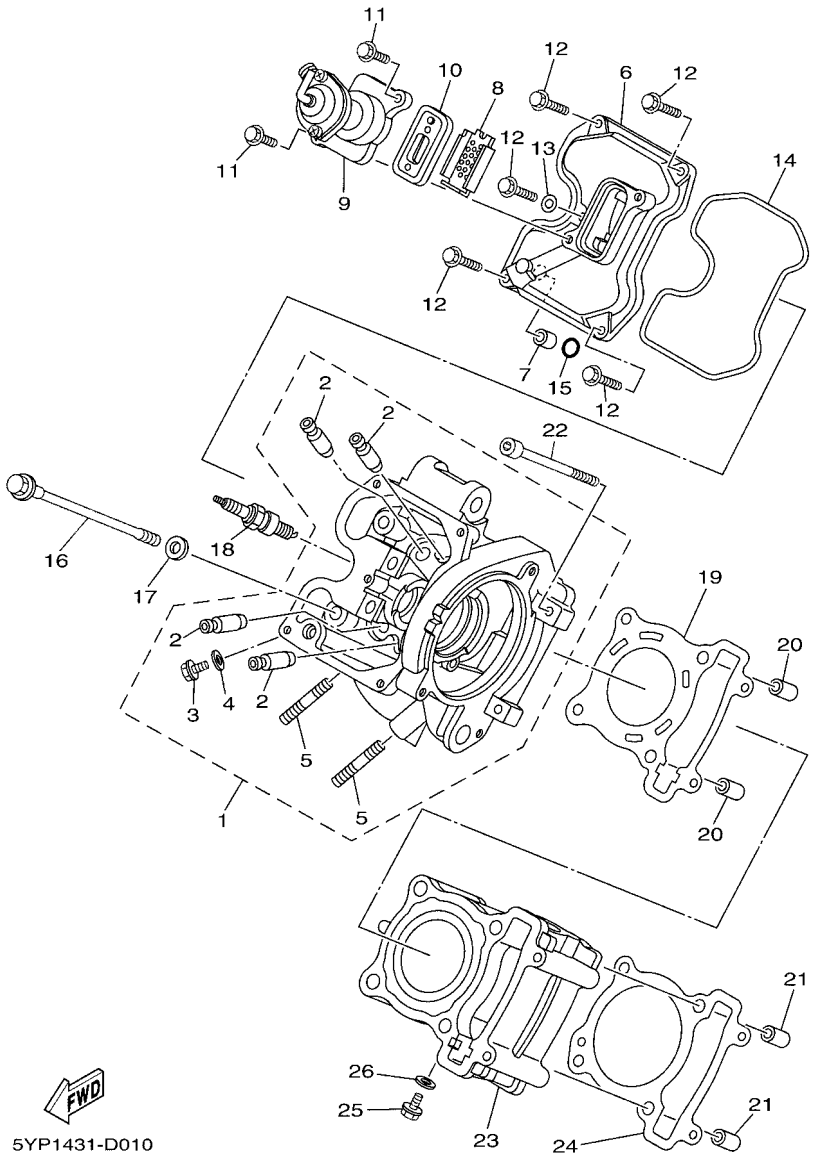

FIG. 1 CYLINDER HEAD

REF. NO.	PART NO.	DESCRIPTION	55DB	55DC				REMARKS
1	1S8–E1102–00	CYLINDER HEAD ASSY	1	1				
2	5YP–E1133–10	.GUIDE, VALVE 1	4	4				
3	90153–06803	.SCREW, HEXAGON	1	1				
4	90430–06817	.GASKET	1	1				
5	95617–08620	.BOLT, STUD	2	2				
6	1S8–E1191–00	COVER, CYLINDER HEAD 1	1	1				
7	91811–10005	PIN, DOWEL	1	1				
8	5YP–1482K–00	PLATE	1	1				
9	5YP–E4840–00	AIR CUT VALVE ASSY	1	1				
10	5YP–E4890–00	REED VALVE ASSY	1	1				
11	95027–06014	BOLT, FLANGE	2	2				
12	95027–06020	BOLT, FLANGE	5	5				
13	90430–06817	GASKET	1	1				
14	2PV–E1193–00	GASKET, HEAD COVER 1	1	1				
15	93210–11802	O-RING	1	1				
16	90105–08850	BOLT, FLANGE	4	4				
17	90201–08609	WASHER, PLATE	4	4				
18	94700–00884	PLUG, SPARK (NGK CPR8EA)	1	1				
19	1S8–E1181–01	GASKET, CYLINDER HEAD 1	1	1				
20	99530–10114	PIN, DOWEL	2	2				
21	99530–10114	PIN, DOWEL	2	2				
22	91317–06100	BOLT,HEX.SOCKET HEAD	2	2				
23	50C–E1311–00	CYLINDER 1	1	1				
24	55D–E1351–00	GASKET, CYLINDER	1	1				
25	90153–06803	SCREW, HEXAGON	1	1				
26	90430–06817	GASKET	1	1				

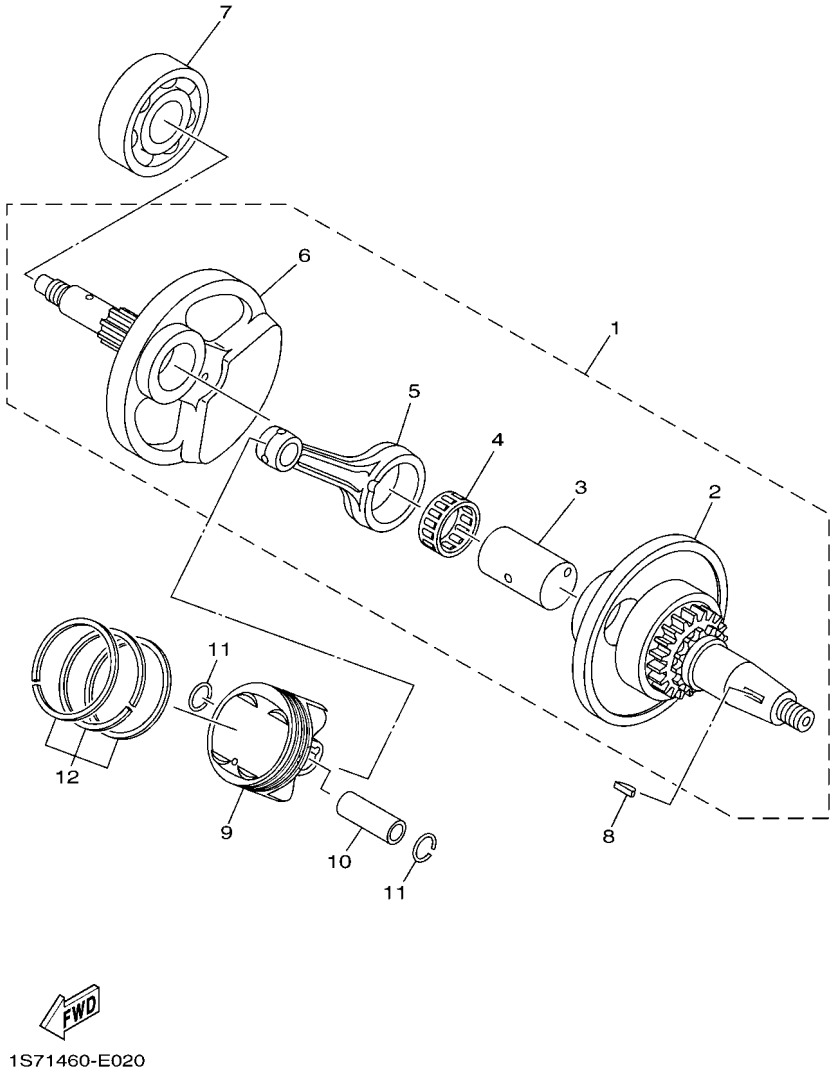

FIG. 2 CRANKSHAFT & PISTON

REF. NO.	PART NO.	DESCRIPTION	55DB	55DC				REMARKS
1	1S8–WE140–11	CRANKSHAFT ASSY	1	1				
2	1S8–WE141–00	.CRANK SUB ASSY 1	1	1				
3	1S8–11681–01	.PIN, CRANK 1	1	1				
4	93310–528X7	.BEARING	1	1				
5	1S8–E1651–00	.ROD, CONNECTING	1	1				
6	1S8–E1422–00	.CRANK 2	1	1				
7	93306–305X7	BEARING	1	1				
8	90280–03017	KEY, WOODRUFF	1	1				
9	2S6–E1631–21	PISTON (STD)	1	1				
10	1S8–11633–01	PIN, PISTON	1	1				
11	93450–16115	CIRCLIP	2	2				
12	50C–E1603–00	PISTON RING SET (STD)	1	1				

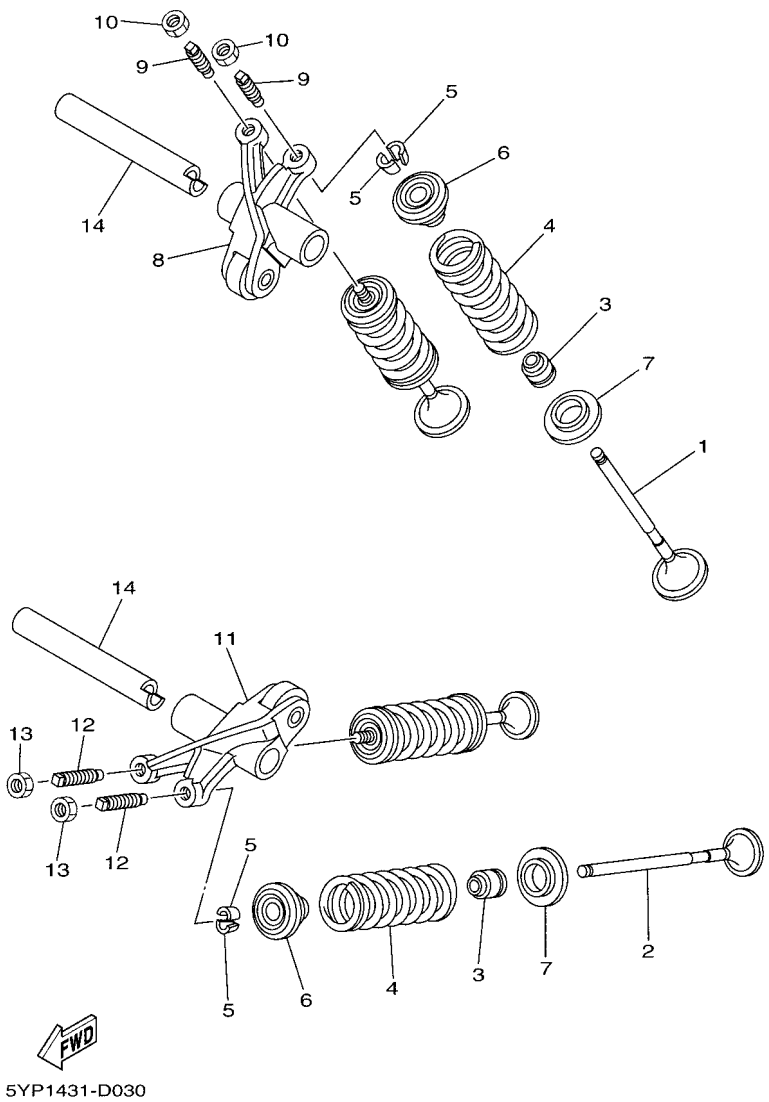

FIG. 3 VALVE

REF. NO.	PART NO.	DESCRIPTION	55DB	55DC				REMARKS
1	2PV–E2111–00	VALVE, INTAKE	2	2				
2	2PV–E2121–00	VALVE, EXHAUST	2	2				
3	5YP–E2119–00	SEAL, VALVE STEM	4	4				
4	5YP–E2113–00	SPRING, VALVE INNER	4	4				
5	1WG–12118–00	LOCK, VALVE SPRING RETAINER	8	8				
6	5YP–12117–00	RETAINER, VALVE SPRING	4	4				
7	5YP–E2126–00	SEAT, VALVE SPRING 2	4	4				
8	5YP–E2151–00	ARM, VALVE ROCKER	1	1				
9	5YP–E2159–00	SCREW, VALVE ADJUSTING	2	2				
10	90170–05302	NUT	2	2				
11	5YP–E2161–00	ARM, VALVE ROCKER 2	1	1				
12	5YP–E2159–00	SCREW, VALVE ADJUSTING	2	2				
13	90170–05302	NUT	2	2				
14	1S8–E2156–00	SHAFT, ROCKER 2	2	2				

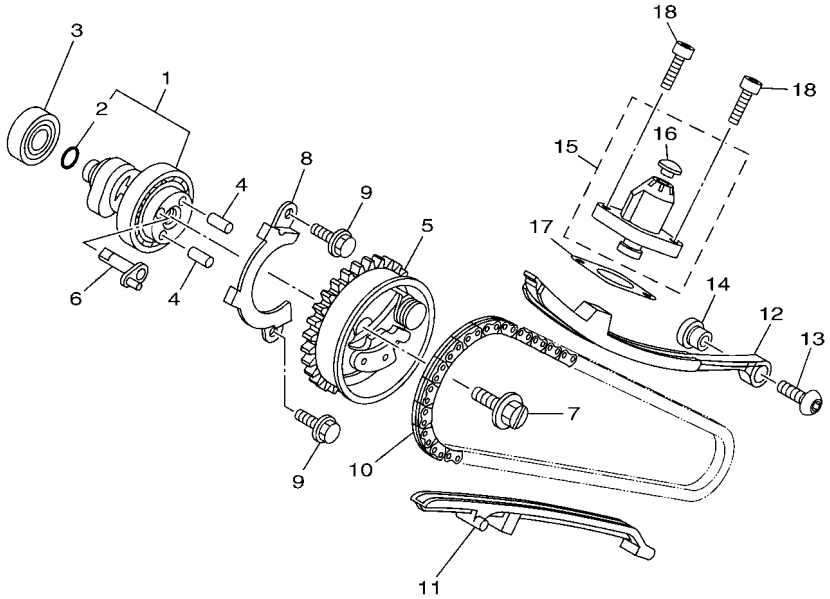

55D1440-K040

FIG. 4 CAMSHAFT & CHAIN

REF. NO.	PART NO.	DESCRIPTION	55DB	55DC				REMARKS
1	21S–E2170–01	CAMSHAFT ASSY 1	1	1				
2	93210–09805	.O-RING	1	1				
3	93306–001X2	BEARING	1	1				
4	93605–06800	PIN, DOWEL	2	2				
5	1B9–E2280–02	DECOMPRESSION ASSY	1	1				
6	5YP–E2288–00	CAM, DECOMPRESSION	1	1				
7	5YP–E2157–01	BOLT	1	1				
8	1S8–E111F–00	PLATE	1	1				
9	95027–06010	BOLT, FLANGE	2	2				
10	94568–A8096	CHAIN	1	1				
11	1S8–E2231–00	GUIDE, STOPPER 1	1	1				
12	5YP–E2241–00	GUIDE, STOPPER 2	1	1				
13	90149–06829	SCREW	1	1				
14	1S8–E5598–00	COLLAR	1	1				
15	5MX–E2210–00	TENSIONER ASSY, CAM CHAIN	1	1				
16	5MX–E2222–00	.PLUG	1	1				
17	1S8–E2213–01	GASKET, TENSIONER CASE	1	1				
18	91317–06016	BOLT,HEX.SOCKET HEAD	2	2				

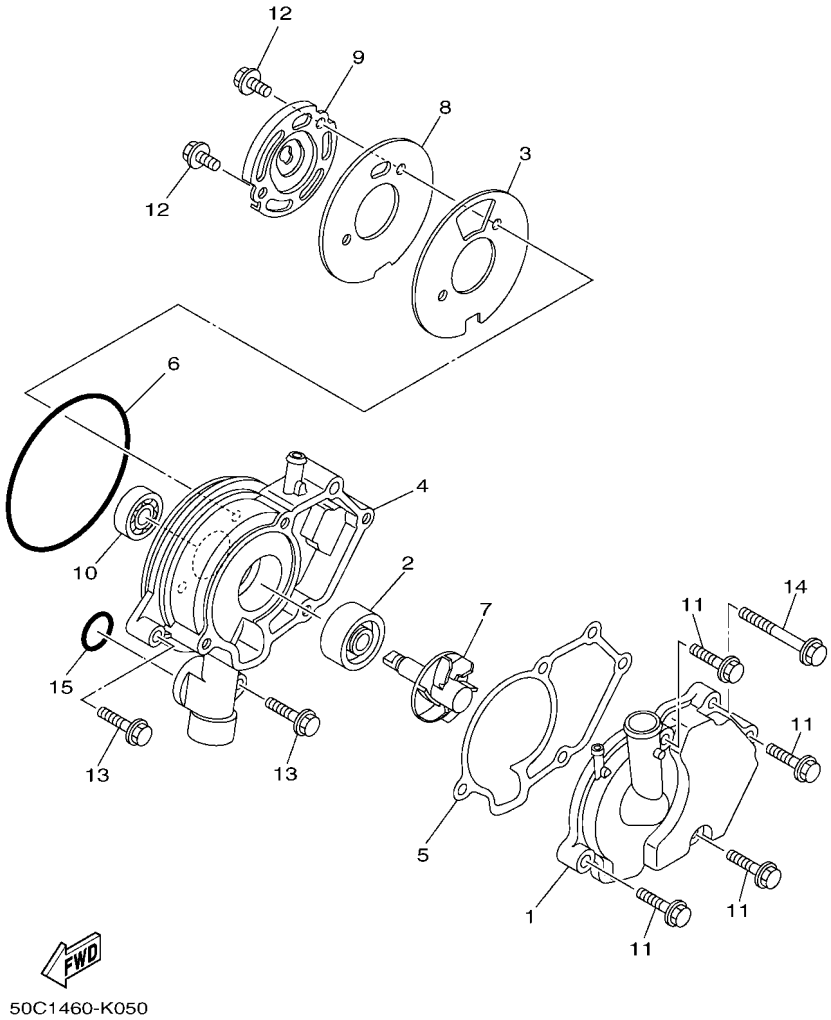

FIG. 5 WATER PUMP

REF. NO.	PART NO.	DESCRIPTION	55DB	55DC				REMARKS
1	1S7–E2422–00	COVER, HOUSING	1	1				
2	93103–10801	OIL SEAL	1	1				
3	50C–E2428–00	GASKET, HOUSING COVER 2	1	1				
4	1S7–E1185–01	COVER, CYLINDER HEAD SIDE 3	1	1				
5	1S7–E1196–00	GASKET, CYLINDER HEAD SIDE	1	1				
6	93210–84801	O-RING	1	1				
7	1S7–E2450–00	IMPELLER SHAFT ASSY	1	1				
8	50C–E1951–00	PLATE	1	1				
9	1S7–E1952–01	PLATE	1	1				
10	93306–000Y3	BEARING	1	1				
11	95027–06025	BOLT, FLANGE	4	4				
12	95027–06012	BOLT, FLANGE	2	2				
13	95027–06025	BOLT, FLANGE	2	2				
14	95027–06050	BOLT, FLANGE	1	1				
15	93210–19809	O-RING	1	1				

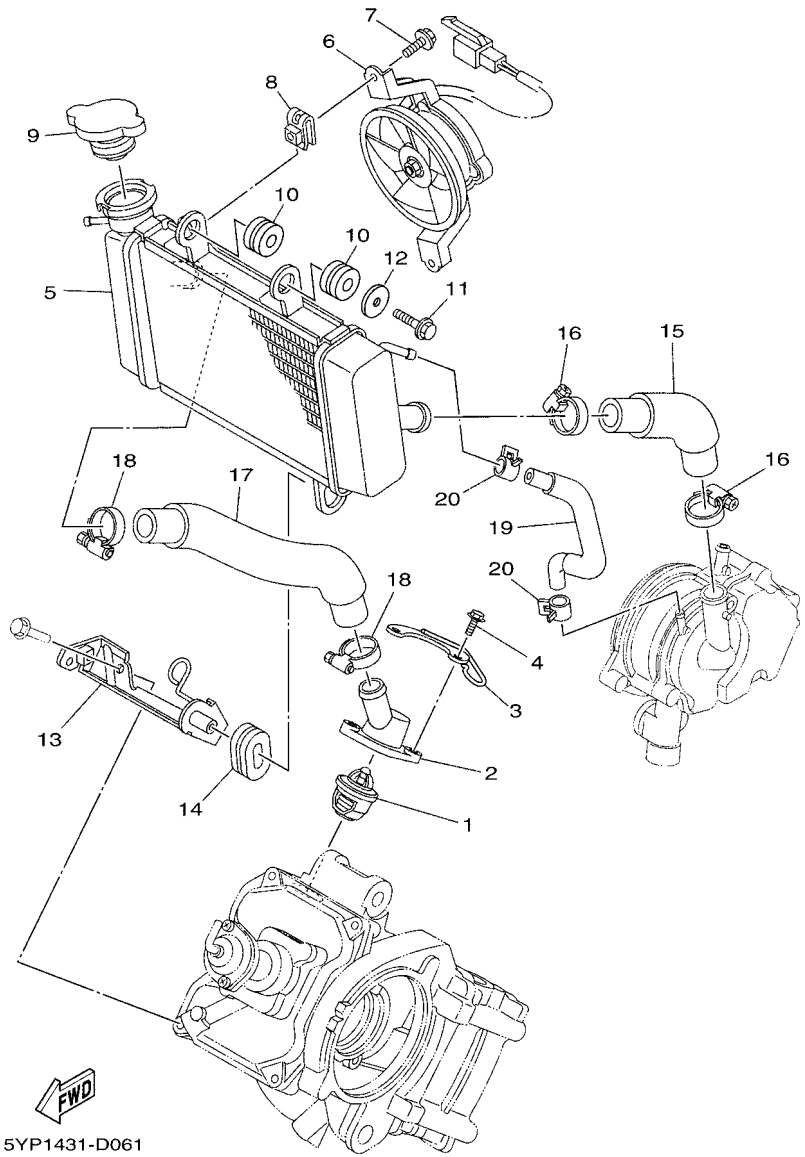

FIG. 6 RADIATOR & HOSE

REF. NO.	PART NO.	DESCRIPTION	55DB	55DC				REMARKS
1	5YP–12411–01	THERMOSTAT	1	1				
2	1S8–E2413–00	COVER, THERMOSTAT	1	1				
3	5YP–E2491–00	CLAMP 1	1	1				
4	90105–06400	BOLT, FLANGE	2	2				
5	5YP–E2461–00	RADIATOR COMP	1	1				
6	5YP–E2405–00	BLOWER ASSY	1	1				
7	5YP–E2675–00	BOLT, BLOWER HOLDING	2	2				
8	5YP–E2671–00	NUT 1	2	2				
9	5P0–E2590–00	CONDUCTION ASSY	1	1				
10	90480–15363	GROMMET	2	2				
11	95827–06016	BOLT, FLANGE	1	1				
12	90201–06069	WASHER, PLATE	1	1				
13	1S8–E2443–01	STAY	1	1				
14	90480–01803	GROMMET	1	1				
15	1S8–E2481–00	PIPE 1	1	1				
16	90450–27803	HOSE CLAMP ASSY	2	2				
17	1S8–E2482–00	PIPE 2	1	1				
18	90450–27803	HOSE CLAMP ASSY	2	2				
19	5YP–E2576–00	HOSE 1	1	1				
20	90467–10038	CLIP	2	2				

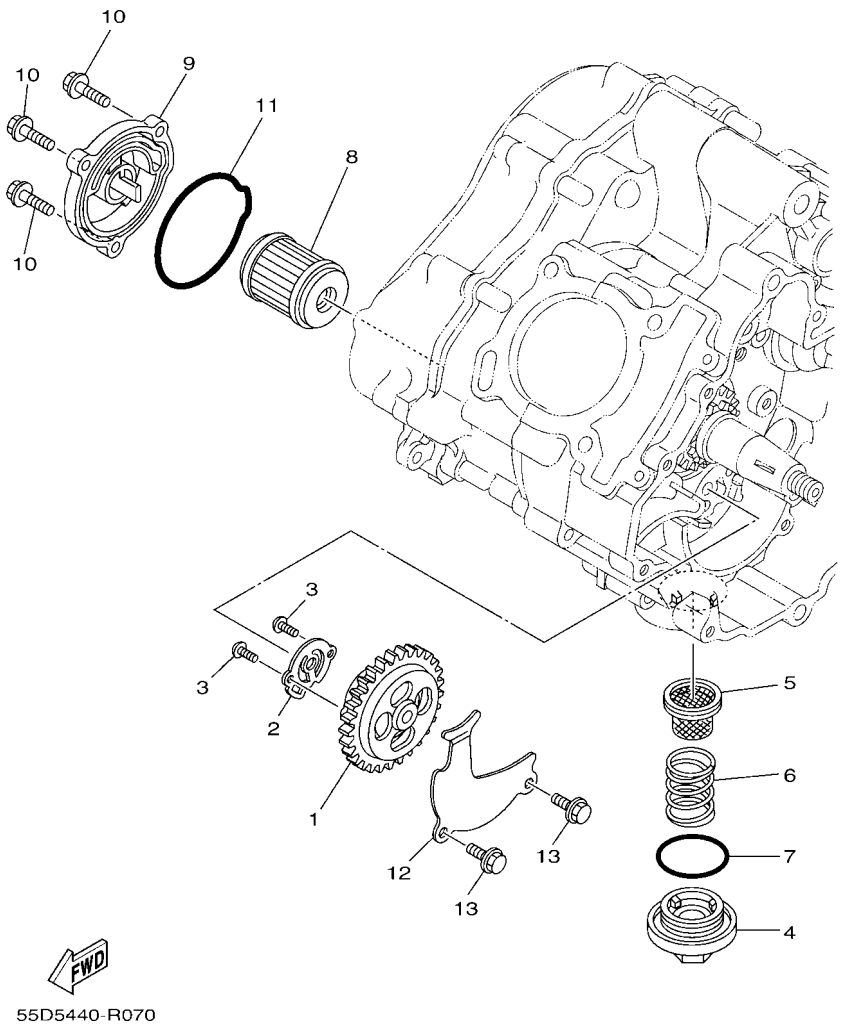

FIG. 7 OIL PUMP

REF. NO.	PART NO.	DESCRIPTION	55DB	55DC				REMARKS
1	1S7–E3300–00	OIL PUMP ASSY	1	1				
2	1S8–E3329–00	GASKET, PUMP COVER	1	1				
3	92017–05025	BOLT, BUTTON HEAD	2	2				
4	1S8–E5351–00	PLUG, DRAIN	1	1				
5	1S8–E3411–00	STRAINER, OIL	1	1				
6	90501–18576	SPRING, COMPRESSION	1	1				
7	93210–34801	O-RING	1	1				
8	38B–E3440–01	ELEMENT ASSY, OIL CLEANER	1	1				
9	55D–E3447–10	COVER, OIL ELEMENT	1	1				
10	9502L–06020	BOLT, FLANGE	3	3				
11	93210–59800	O-RING	1	1				
12	1S8–E3327–00	COVER, PUMP GEAR	1	1				
13	9502L–06012	BOLT, FLANGE	2	2				

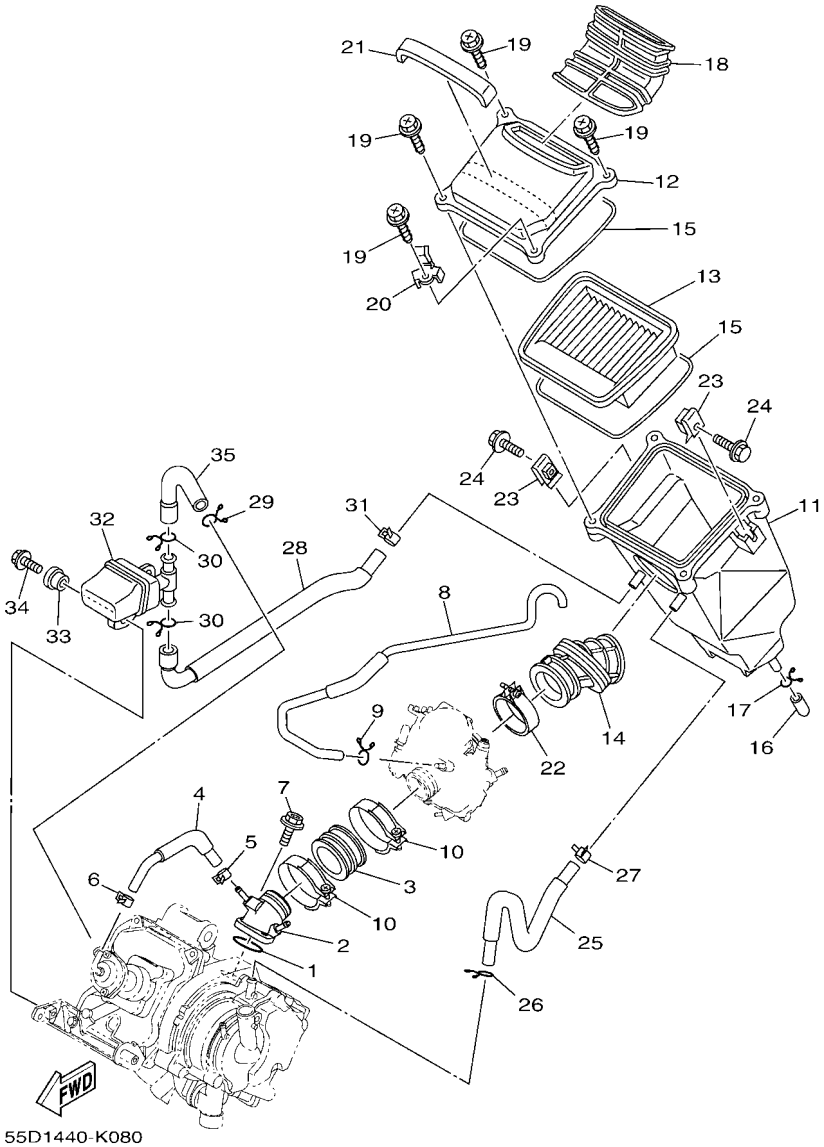

FIG. 8 INTAKE

REF. NO.	PART NO.	DESCRIPTION	55DB	55DC				REMARKS
1	93210–32807	O-RING	1	1				
2	50C–E3536–00	JT. , CARBURETOR	1	1				
3	55P–E3586–00	JOINT, CARBURETOR 1	1	1				
4	1S7–E3542–00	HOSE, VACUUM SENSING 1	1	1				
5	90467–08801	CLIP	1	1				
6	90467–08801	CLIP	1	1				
7	90105–06061	BOLT, FLANGE	2	2				
8	55C–E4197–00	PIPE	1	1				
9	90467–07029	CLIP	1	1				
10	5MX–E3474–01	BAND	2	2				
11	50C–E4411–00	CASE, AIR CLEANER 1	1	1				
12	1S7–E4412–00	CAP, CLEANER CASE 1	1	1				
13	1S7–E4450–00	ELEMENT ASSY, AIR CLEANER	1	1				
14	50C–E4453–00	JOINT, AIR CLEANER 1	1	1				
15	1S7–E4452–00	SEAL	2	2				
16	5TL–E443E–00	PIPE, DRAIN	1	1				
17	90467–12800	CLIP	1	1				
18	1S7–E4437–00	DUCT	1	1				
19	90163–05803	SCREW, TAPPING	4	4				
20	90462–08814	CLAMP	1	1				
21	1S7–E4425–00	DAMPER 1	1	1				
22	5MX–E3575–01	BAND	1	1				
23	90183–06023	NUT, SPRING	2	2				
24	90119–06051	BOLT, WITH WASHER	2	2				
25	55P–E1166–00	PIPE, BREATHER 1	1	1				
26	90467–13858	CLIP	1	1				
27	90467–13064	CLIP	1	1				

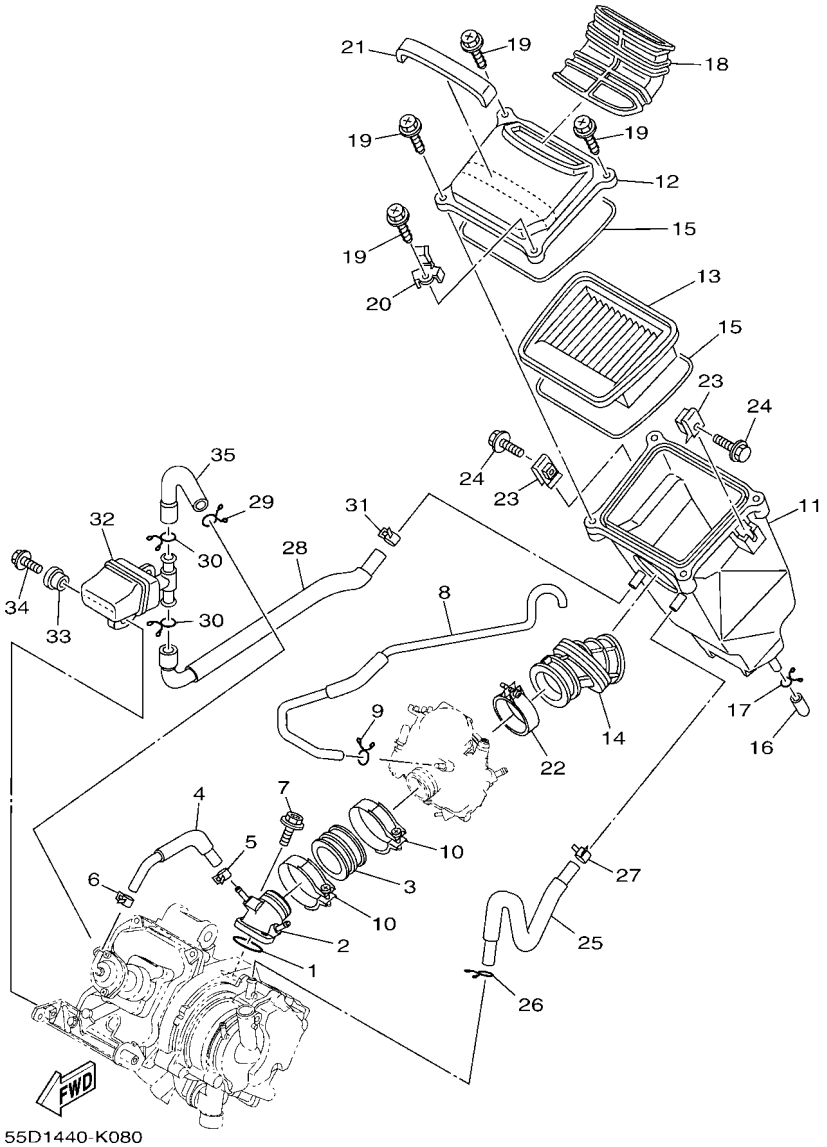

FIG. 8 INTAKE

REF. NO.	PART NO.	DESCRIPTION	55DB	55DC				REMARKS
28	55C–E4882–00	HOSE, BEND 2	1	1				
29	90467–15012	CLIP	1	1				
30	90467–15012	CLIP	2	2				
31	90467–14117	CLIP	1	1				
32	1S7–E4877–01	RESONATOR	1	1				
33	90387–068B0	COLLAR	1	1				
34	97027–06016	BOLT, HEXAGON	1	1				
35	5YP–E4881–01	HOSE, BEND 1	1	1				

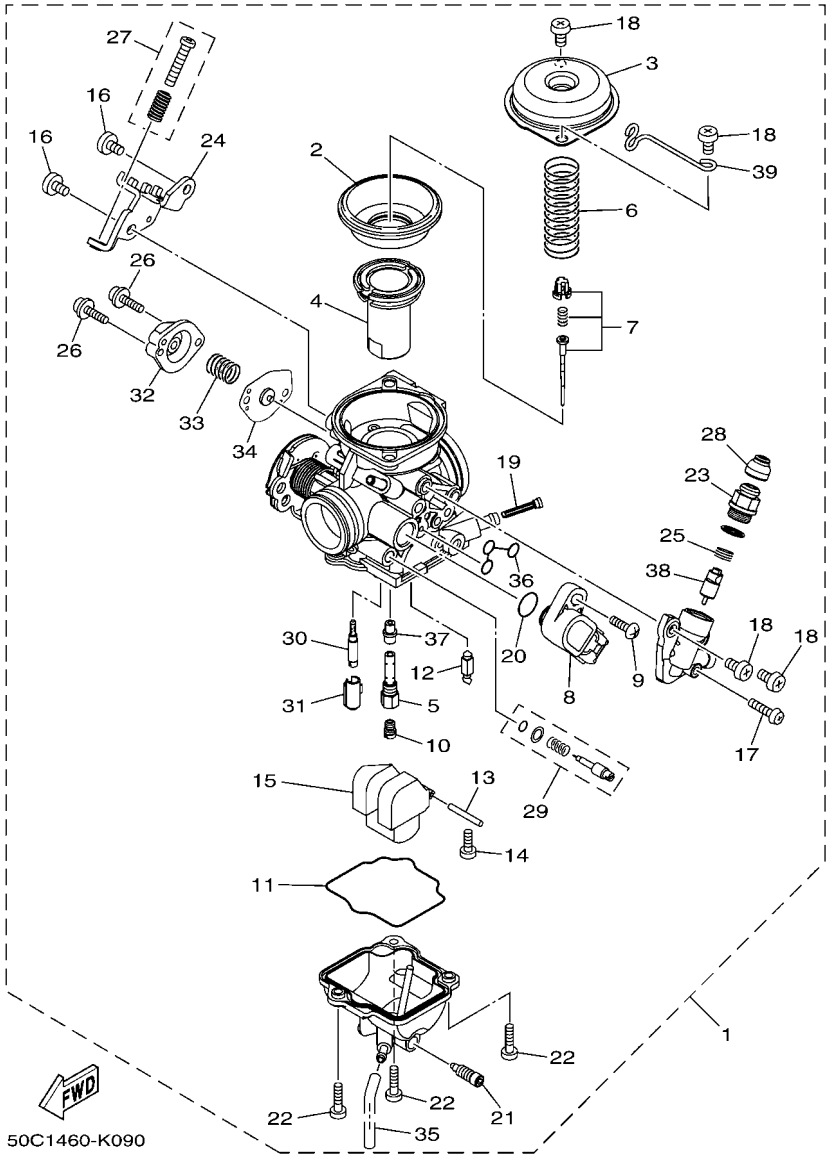

FIG. 9 CARBURETOR

REF. NO.	PART NO.	DESCRIPTION	55DB	55DC				REMARKS
1	55D–E4901–20	CARBURETOR ASSY 1	1	1				
2	5LW–24411–00	.DIAPHRAGM	1	1				
3	5LW–14958–00	.COVER, DIAPHRAGM	1	1				
4	31S–14112–00	.VALVE, THROTTLE 1	1	1				
5	50C–14261–00	.HOLDER	1	1				
6	50C–14589–00	.SPRING	1	1				
7	55D–1490J–10	.NEEDLE SET	1	1				
8	18D–H5885–00	.THROTTLE SENSOR ASSY	1	1				
9	5YP–14429–00	.SCREW	1	1				
10	3G2–14231–23	.JET, MAIN (#115)	1	1				
11	5HK–14147–00	.O-RING	1	1				
12	5LW–14150–00	.NEEDLE ASSY	1	1				
13	353–14186–00	.PIN, FLOAT	1	1				
14	98507–04008	.SCREW, PAN HEAD	1	1				
15	5HK–14985–00	.FLOAT	1	1				
16	98507–05008	.SCREW, PAN HEAD	2	2				
17	98507–04018	.SCREW, PAN HEAD	1	1				
18	98507–05010	.SCREW, PAN HEAD	4	4				
19	5LW–14994–00	.NET, FILTER	1	1				
20	5YP–14561–00	.O-RING	1	1				
21	5MP–14191–00	.PLUG, DRAIN	1	1				
22	98507–04014	.SCREW, PAN HEAD	3	3				
23	3RW–14174–00	.CAP, PLUNGER	1	1				
24	50C–14995–00	.BRACKET	1	1				
25	509–14135–00	.COIL, SPRING	1	1				
26	97607–04114	.SCREW, WITH WASHER	2	2				
27	5LW–14103–00	.THROTTLE SCREW SET	1	1				

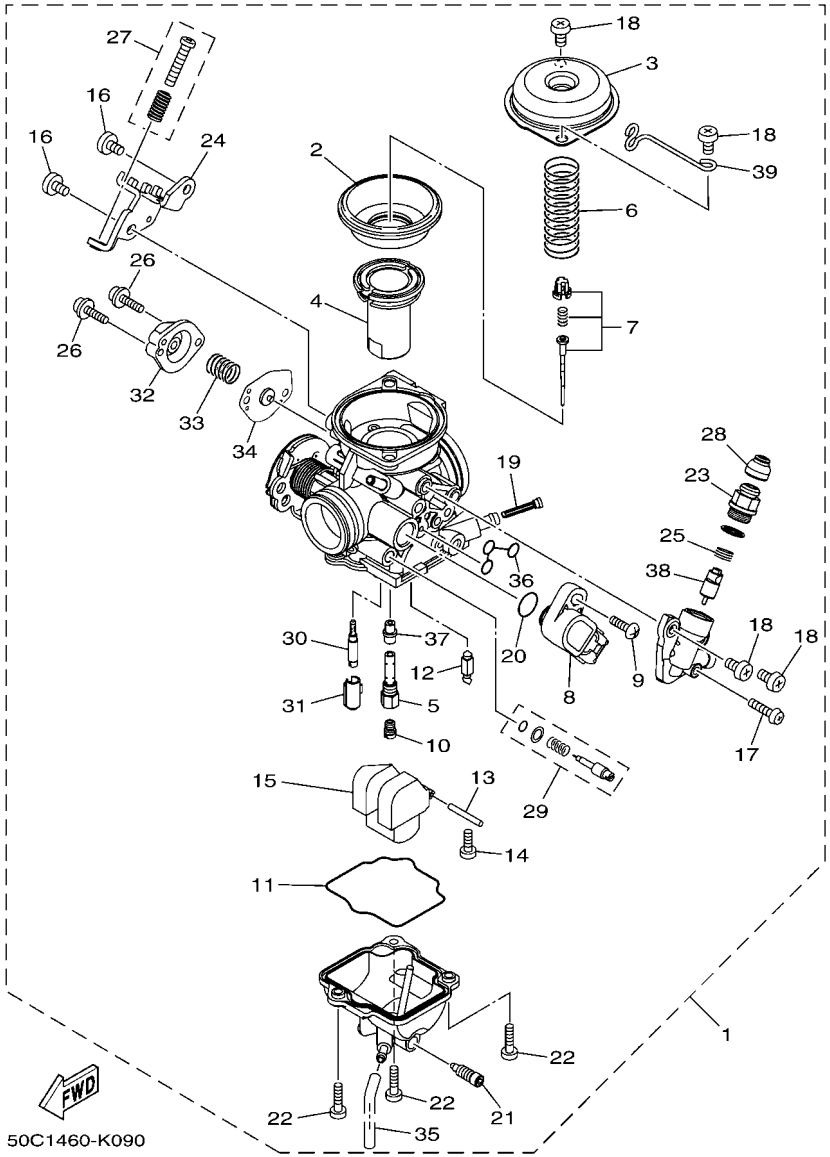

FIG. 9 CARBURETOR

REF. NO.	PART NO.	DESCRIPTION	55DB	55DC				REMARKS
28	22F–14173–00	.COVER, PLUNGER CAP	1	1				
29	50C–14105–00	.PILOT SCREW SET	1	1				
30	5P0–14142–15	.JET, PILOT (#15)	1	1				
31	4JG–14261–00	.HOLDER	1	1				
32	33S–14280–00	.COVER, CARBURETOR	1	1				
33	5HK–14275–00	.SPRING	1	1				
34	5AP–14940–00	.DIAPHRAGM ASSY	1	1				
35	5FC–14149–00	.PIPE	1	1				
36	5LW–14147–00	.O-RING	1	1				
37	5P0–14141–13	.NOZZLE, MAIN	1	1				
38	5LW–14171–10	.PLUNGER, STARTER	1	1				
39	50C–14137–00	.CLIP	1	1				

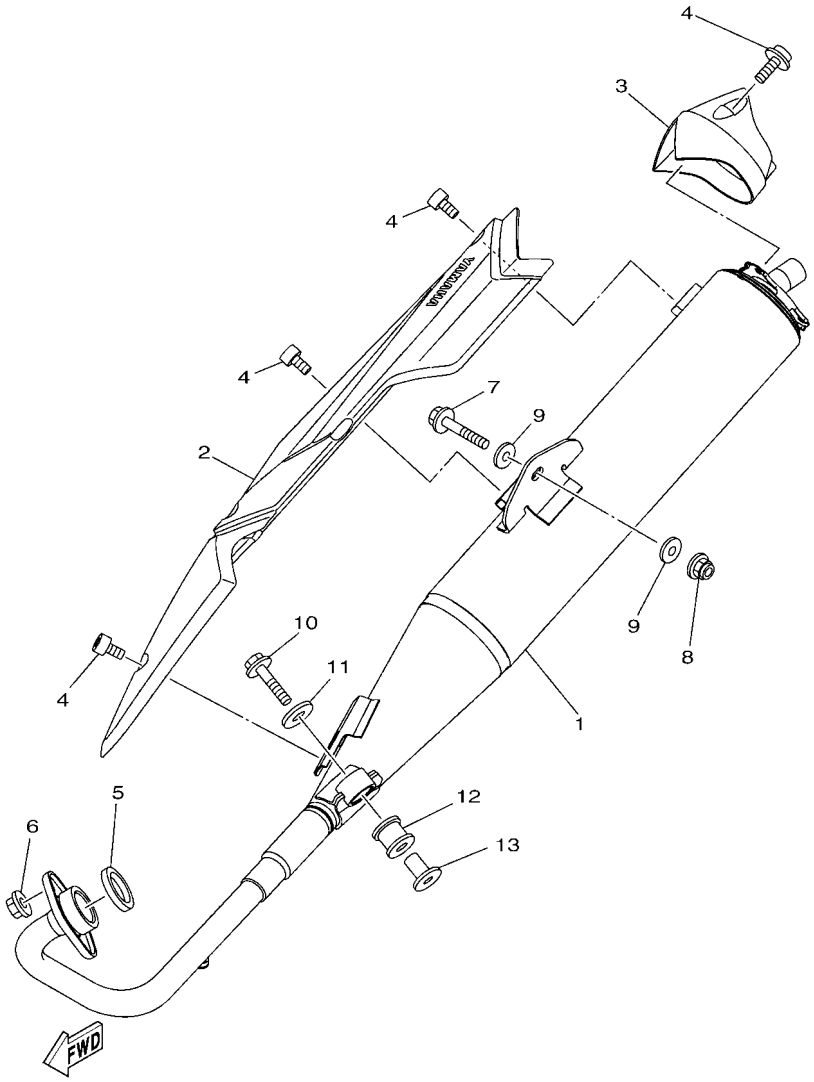

55D4440-S100

FIG. 10 EXHAUST

REF. NO.	PART NO.	DESCRIPTION	55DB	55DC				REMARKS
1	55D–E4703–10	MUFFLER COMP. 1	1	1				
2	55D–E4718–10	PROTECTOR, MUFFLER 1	1	1				
3	55D–E4799–10	CAP	1					
	55D–E4799–20	CAP		1				
4	90111–06807	BOLT,HEX. SOCKET BUTTON	6	6				
5	1S8–E4613–00	GASKET, EXHAUST PIPE	1	1				
6	95707–08500	NUT, FLANGE	2	2				
7	95827–10045	BOLT, FLANGE	1	1				
8	95707–10500	NUT, FLANGE	1	1				
9	90201–10141	WASHER, PLATE	2	2				
10	95807–08035	BOLT, FLANGE	1	1				
11	90201–08612	WASHER, PLATE	1	1				
12	29B–E4747–00	DAMPER, MUFFLER	1	1				
13	90387–08822	COLLAR	1	1				

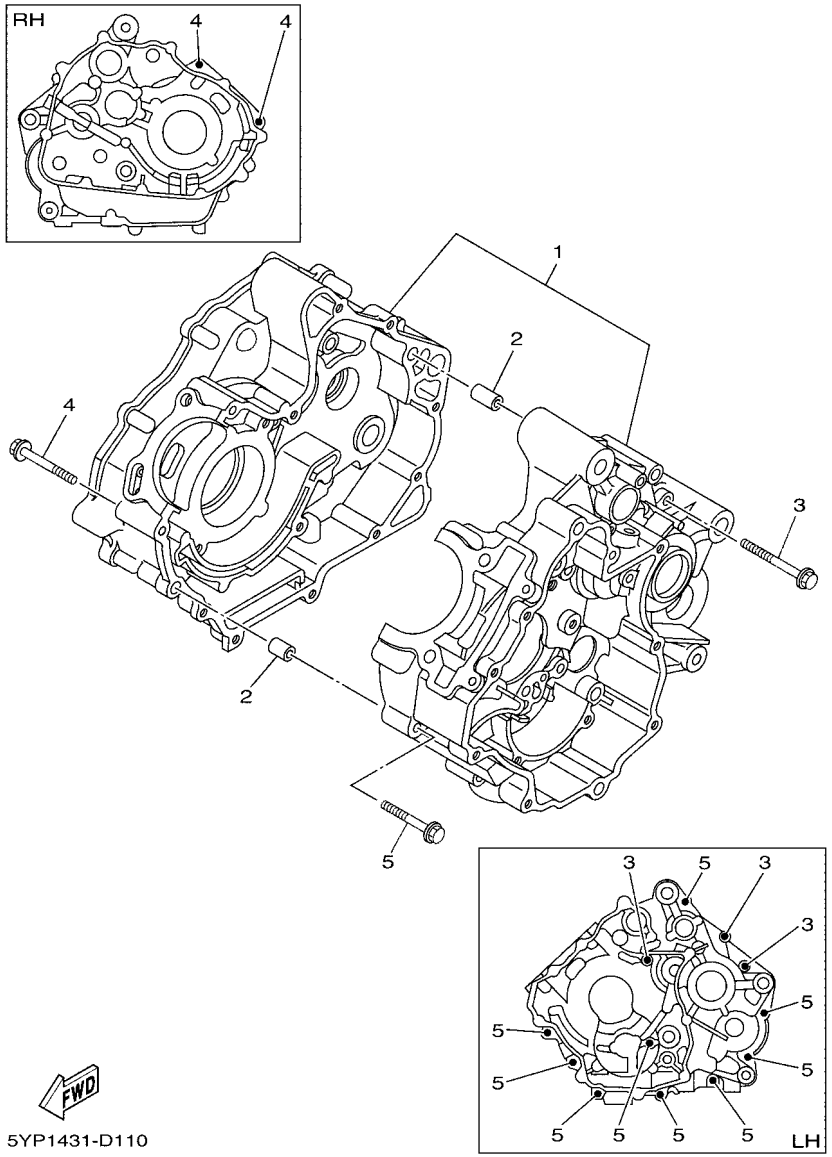

FIG. 11 CRANKCASE

REF. NO.	PART NO.	DESCRIPTION	55DB	55DC				REMARKS
1	1S8–E5150–00	CRANKCASE ASSY	1	1				
2	99530–10114	PIN, DOWEL	2	2				
3	9502L–06060	BOLT, FLANGE	3	3				
4	9502L–06050	BOLT, FLANGE	2	2				
5	9502L–06045	BOLT, FLANGE	9	9				

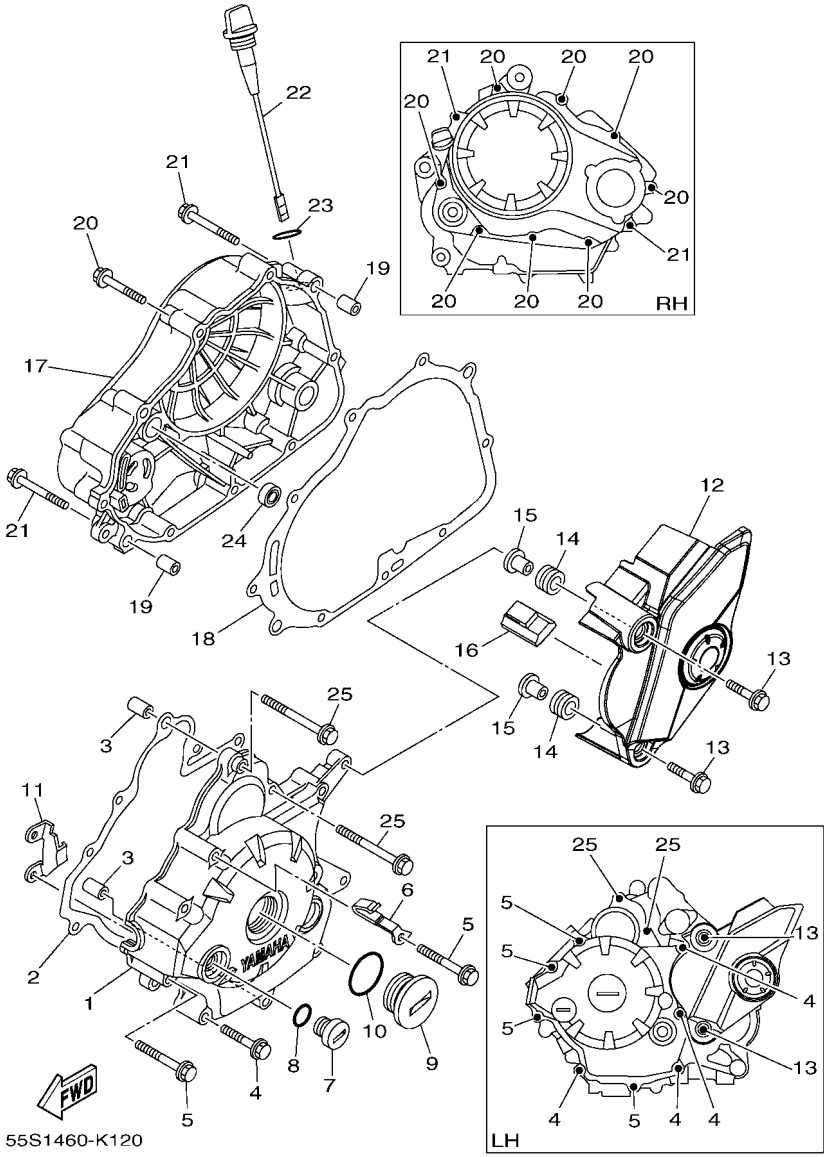

FIG. 12 CRANKCASE COVER 1

REF. NO.	PART NO.	DESCRIPTION	55DB	55DC				REMARKS
1	55D–E5411–00	COVER, CRANKCASE 1	1	1				
2	55D–E5451–00	GASKET, CRANKCASE COVER 1	1	1				
3	99530–10114	PIN, DOWEL	2	2				
4	9502L–06040	BOLT, FLANGE	4	4				
5	9502L–06050	BOLT, FLANGE	4	4				
6	90462–08817	CLAMP	1	1				
7	90340–14824	PLUG, STRAIGHT SCREW	1	1				
8	93210–14899	O-RING	1	1				
9	90340–32823	PLUG, STRAIGHT SCREW	1	1				
10	93210–32803	O-RING	1	1				
11	5YP–E5113–00	PLATE	1	1				
12	55D–E5418–10	COVER, CHAIN CASE	1	1				
13	95807–06025	BOLT, FLANGE	2	2				
14	90480–13808	GROMMET	2	2				
15	90387–06063	COLLAR	2	2				
16	5YP–E5377–00	GUIDE, INLET	1	1				
17	55D–E5421–00	COVER, CRANKCASE 2	1	1				
18	55D–E5461–00	GASKET, CRANKCASE COVER 2	1	1				
19	99530–10114	PIN, DOWEL	2	2				
20	9502L–06040	BOLT, FLANGE	8	8				
21	9502L–06050	BOLT, FLANGE	2	2				
22	1S8–E5362–00	PLUG, OIL LEVEL	1	1				
23	93210–198F0	O-RING	1	1				
24	93101–10841	OIL SEAL	1	1				
25	9502L–06060	BOLT, FLANGE	2	2				

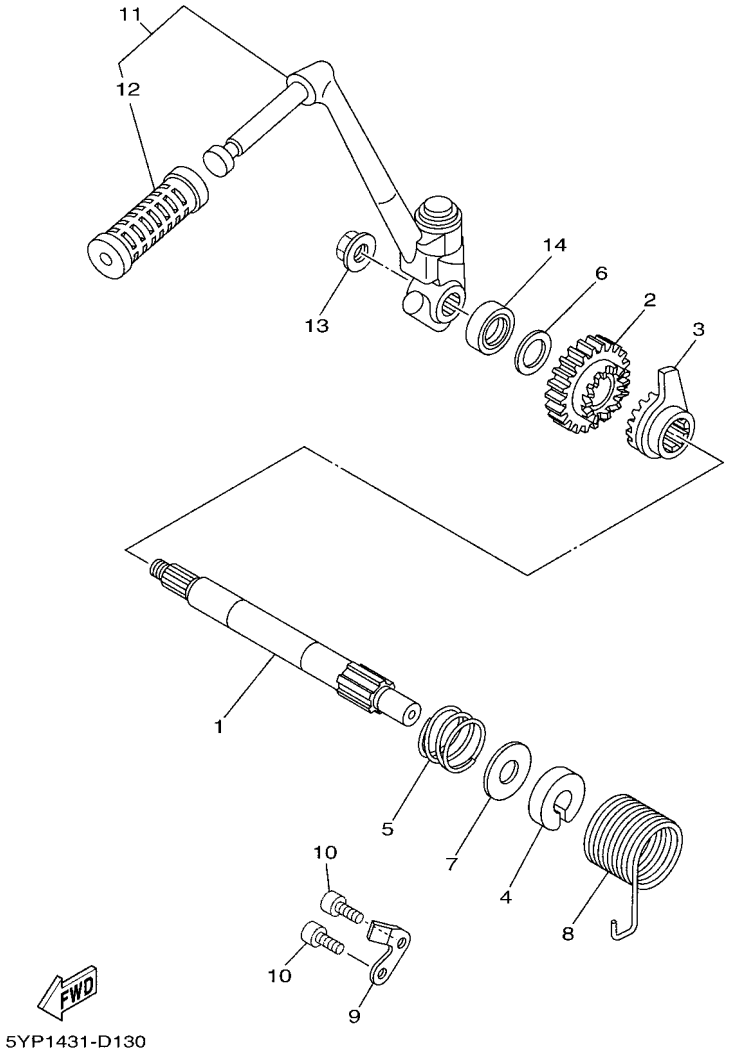

FIG. 13 STARTER

REF. NO.	PART NO.	DESCRIPTION	55DB	55DC				REMARKS
1	1S9–E5661–00	AXLE, KICK	1	1				
2	5YP–E5641–00	GEAR, KICK	1	1				
3	5YP–E5671–00	WHEEL, RATCHET	1	1				
4	5YP–E5664–00	GUIDE, SPRING	1	1				
5	5YP–E5767–00	SPRING	1	1				
6	90201–16803	WASHER, PLATE	1	1				
7	5YP–E5696–00	WASHER 2	1	1				
8	5YP–E5555–00	SPRING, RETURN	1	1				
9	5YP–E5674–00	GUID, RATCHET WHEEL	1	1				
10	91317–06016	BOLT,HEX.SOCKET HEAD	2	2				
11	1S8–E5620–00	KICK CRANK ASSY	1	1				
12	2N9–E5618–00	.COVER, KICK LEVER	1	1				
13	90179–10017	NUT	1	1				
14	93102–16800	OIL SEAL	1	1				

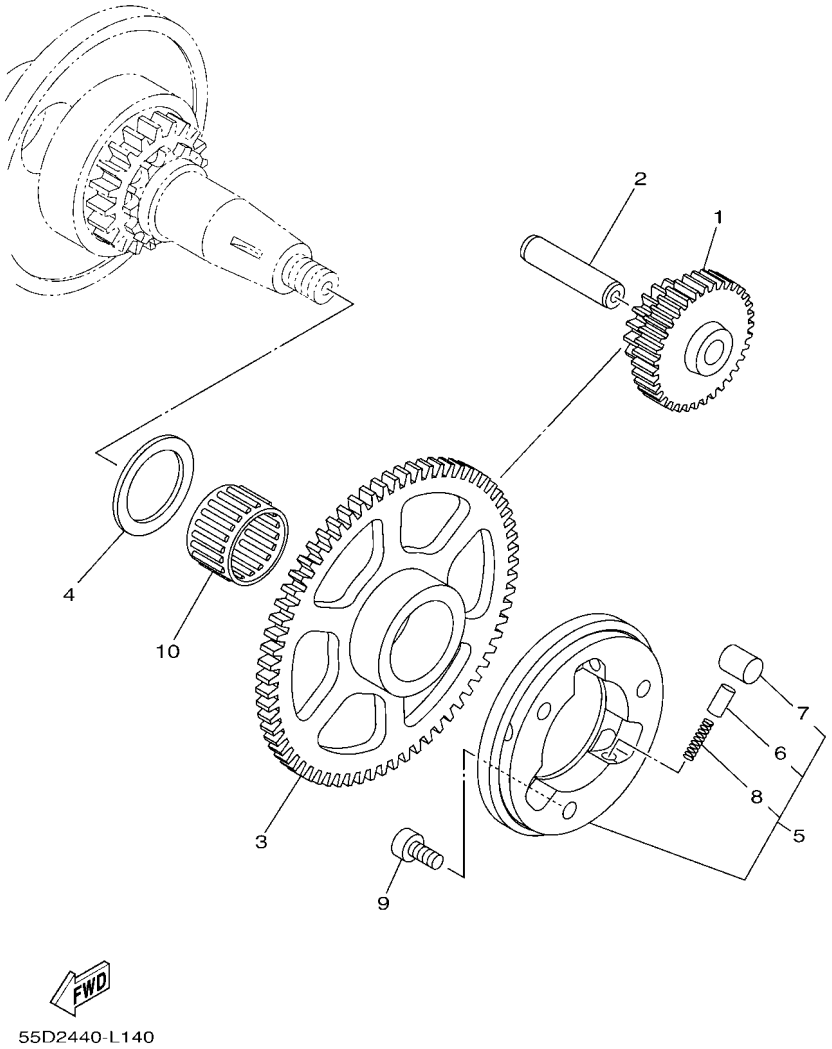

FIG. 14 STARTER CLUTCH

REF. NO.	PART NO.	DESCRIPTION	55DB	55DC				REMARKS
1	5YP–E5514–00	GEAR 2	1	1				
2	1S8–E5521–00	SHAFT 1	1	1				
3	55D–E5524–00	WHEEL, STARTER	1	1				
4	90201–25290	WASHER, PLATE	1	1				
5	1ST–E5580–00	STARTER CLUTCH OUTER ASSY	1	1				
6	1ST–E5583–00	.CAP, STARTER CLUTCH SPRING	3	3				
7	1ST–E5614–00	.PIN, DOWEL	3	3				
8	90501–030A0	.SPRING, COMPRESSION	3	3				
9	91317–06014	BOLT,HEX.SOCKET HEAD	3	3				
10	93310–325X1	BEARING	1	1				

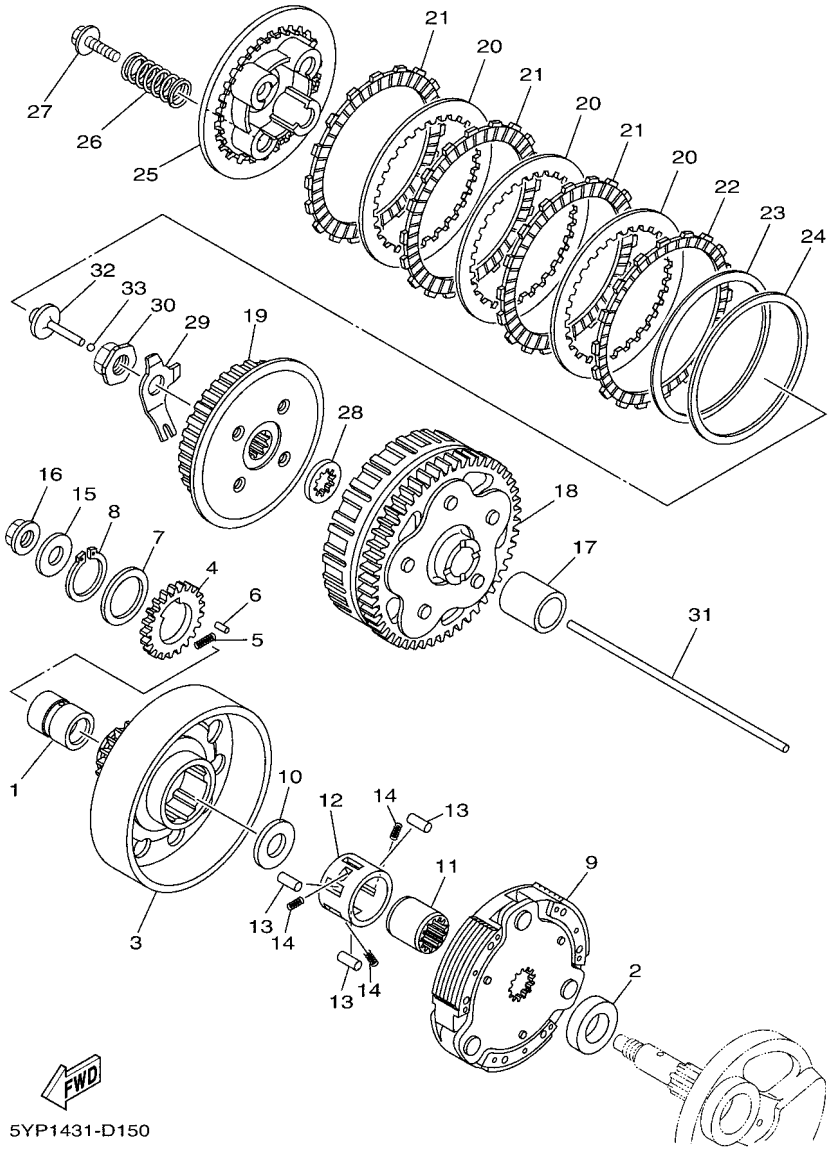

FIG. 15 CLUTCH

REF. NO.	PART NO.	DESCRIPTION	55DB	55DC				REMARKS
1	5YP–E6116–00	COLLAR 1	1	1				
2	55D–E6182–00	SPACER 2	1	1				
3	5YP–E6611–00	CLUTCH HOUSING COMP.	1	1				
4	5YP–E6131–00	GEAR, PRIMARY DRIVE 2	1	1				
5	5YP–E6539–00	SPRING	1	1				
6	93602–08810	PIN, DOWEL	1	1				
7	5YP–E6144–00	WASHER	1	1				
8	99009–28400	CIRCLIP	1	1				
9	5YP–E6620–00	CLUTCH CARRIER ASSY	1	1				
10	90201–167P7	WASHER, PLATE	1	1				
11	5YP–E6512–00	BOSS, CLUTCH HOUSING	1	1				
12	5YP–E6586–00	CAGE	1	1				
13	5YP–E6143–00	PIN, ROLLER	3	3				
14	90501–04801	SPRING, COMPRESSION	3	3				
15	90201–12019	WASHER, PLATE	1	1				
16	90179–12659	NUT	1	1				
17	1S8–E6181–00	SPACER 1	1	1				
18	5YP–E6150–00	PRIMARY DRIVEN GEAR COMP.	1	1				
19	5YP–E6371–00	BOSS, CLUTCH	1	1				
20	5YP–E6324–00	PLATE, CLUTCH 1	3	3				
21	5YP–E6321–00	PLATE, FRICTION	3	3				
22	5YP–E6331–00	PLATE, FRICTION 2	1	1				
23	5YP–E6383–00	SPRING.,CUSHION	1	1				
24	5YP–E6384–00	PLATE, SEAT	1	1				
25	5YP–E6351–00	PLATE, PRESSURE 1	1	1				
26	5YP–E6333–00	SPRING, CLUTCH 1	4	4				
27	5YP–E6777–00	BOLT	4	4				

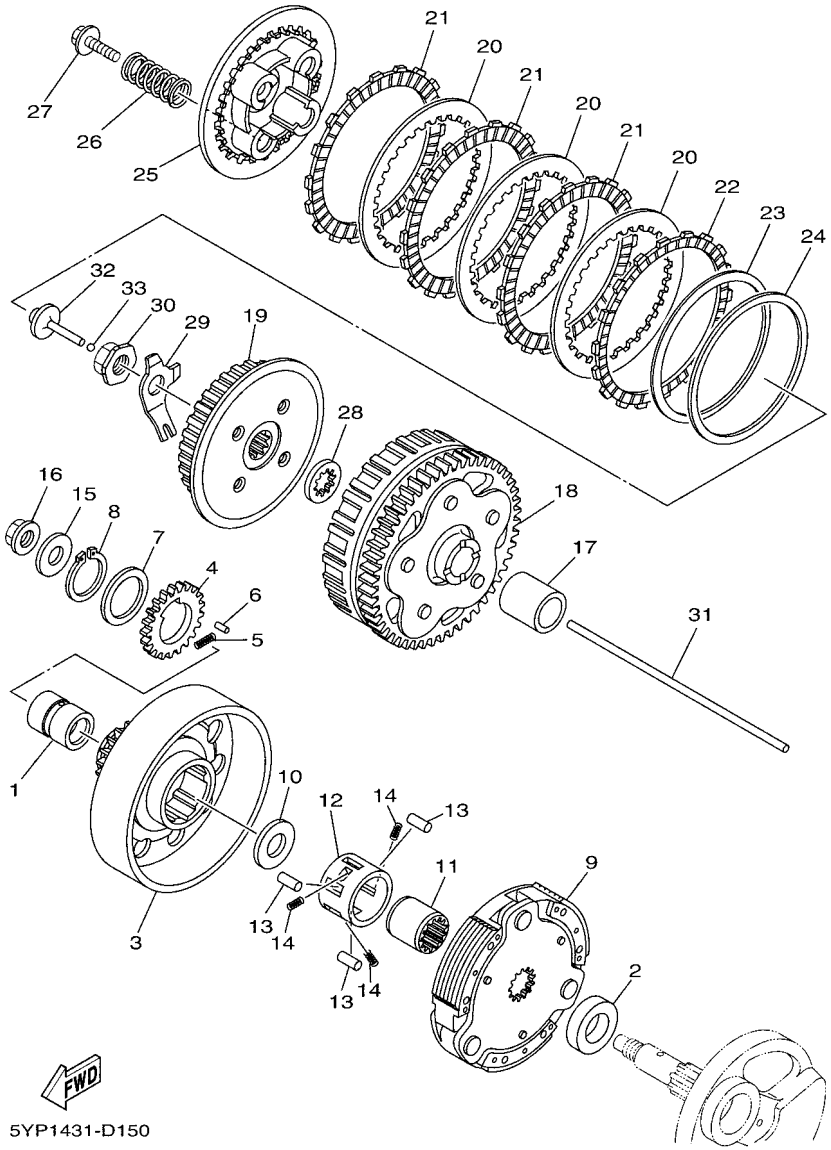

FIG. 15 CLUTCH

REF. NO.	PART NO.	DESCRIPTION	55DB	55DC				REMARKS
28	5YP–E6628–00	WASHER	1	1				
29	1S8–E6135–00	WASHER, LOCK	1	1				
30	90179–14001	NUT	1	1				
31	5YP–E6357–00	ROD, PUSH 2	1	1				
32	B6F–E6356–00	ROD, PUSH 1	1	1				
33	93503–16807	BALL	1	1				

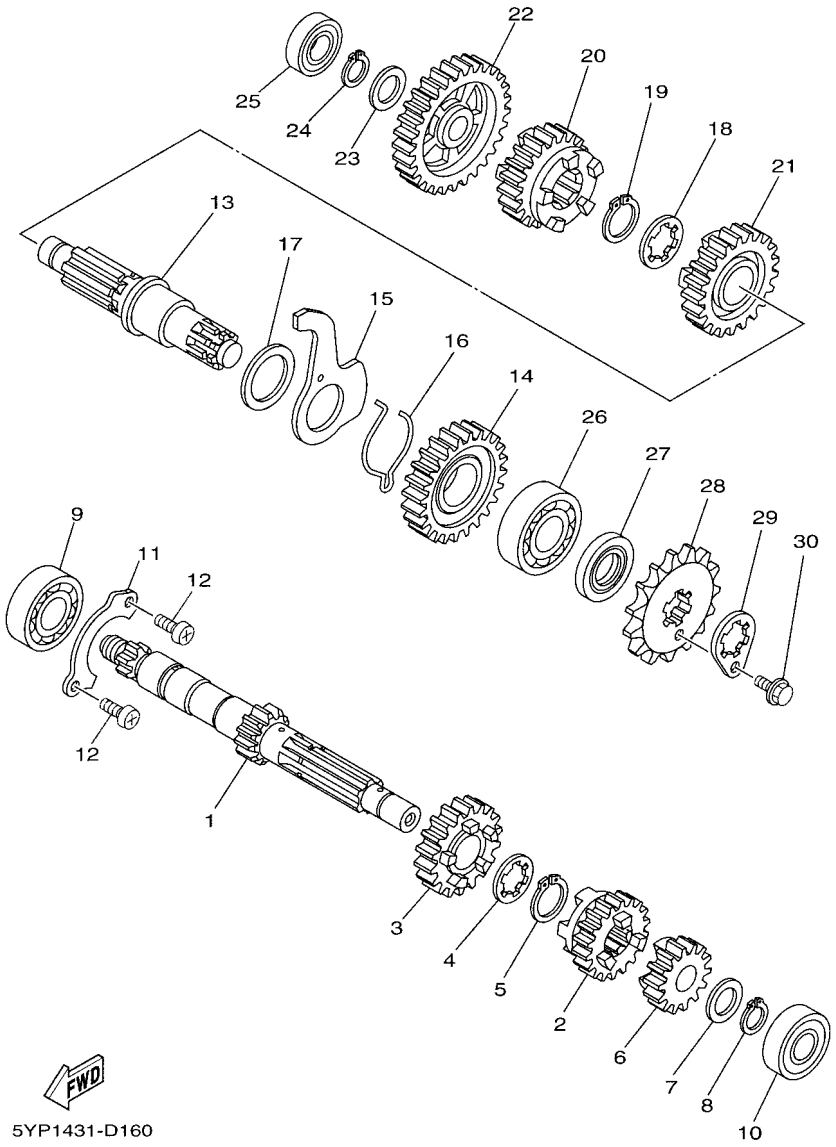

FIG. 16 TRANSMISSION

REF. NO.	PART NO.	DESCRIPTION	55DB	55DC				REMARKS
1	5YP–E7411–00	AXLE, MAIN (12T)	1	1				
2	5YP–E7131–00	GEAR, 3RD PINION (17T)	1	1				
3	5YP–E7141–00	GEAR, 4TH PINION (22T)	1	1				
4	90209–17285	WASHER	1	1				
5	93410–20809	CIRCLIP	1	1				
6	5YP–E7121–00	GEAR, 2ND PINION (16T)	1	1				
7	90201–15700	WASHER, PLATE	1	1				
8	99009–15400	CIRCLIP	1	1				
9	93306–004XR	BEARING	1	1				
10	93306–252X1	BEARING	1	1				
11	1S8–E7471–00	PLATE, COVER	1	1				
12	98517–06012	SCREW, PAN HEAD	2	2				
13	5YP–E7421–00	AXLE, DRIVE	1	1				
14	5YP–E7221–00	GEAR, 2ND WHEEL (30T)	1	1				
15	5YP–E8561–00	PLATE, SIDE 1	1	1				
16	5TN–E8545–00	SPRING	1	1				
17	90201–26802	WASHER, PLATE	1	1				
18	90209–18208	WASHER	1	1				
19	93410–22820	CIRCLIP	1	1				
20	5YP–E7241–00	GEAR, 4TH WHEEL (23T)	1	1				
21	5YP–E7231–00	GEAR, 3RD WHEEL (23T)	1	1				
22	5YP–E7211–00	GEAR, 1ST WHEEL (34T)	1	1				
23	90201–15700	WASHER, PLATE	1	1				
24	99009–15400	CIRCLIP	1	1				
25	93306–002X8	BEARING	1	1				
26	93306–204X9	BEARING	1	1				
27	93102–20881	OIL SEAL	1	1				

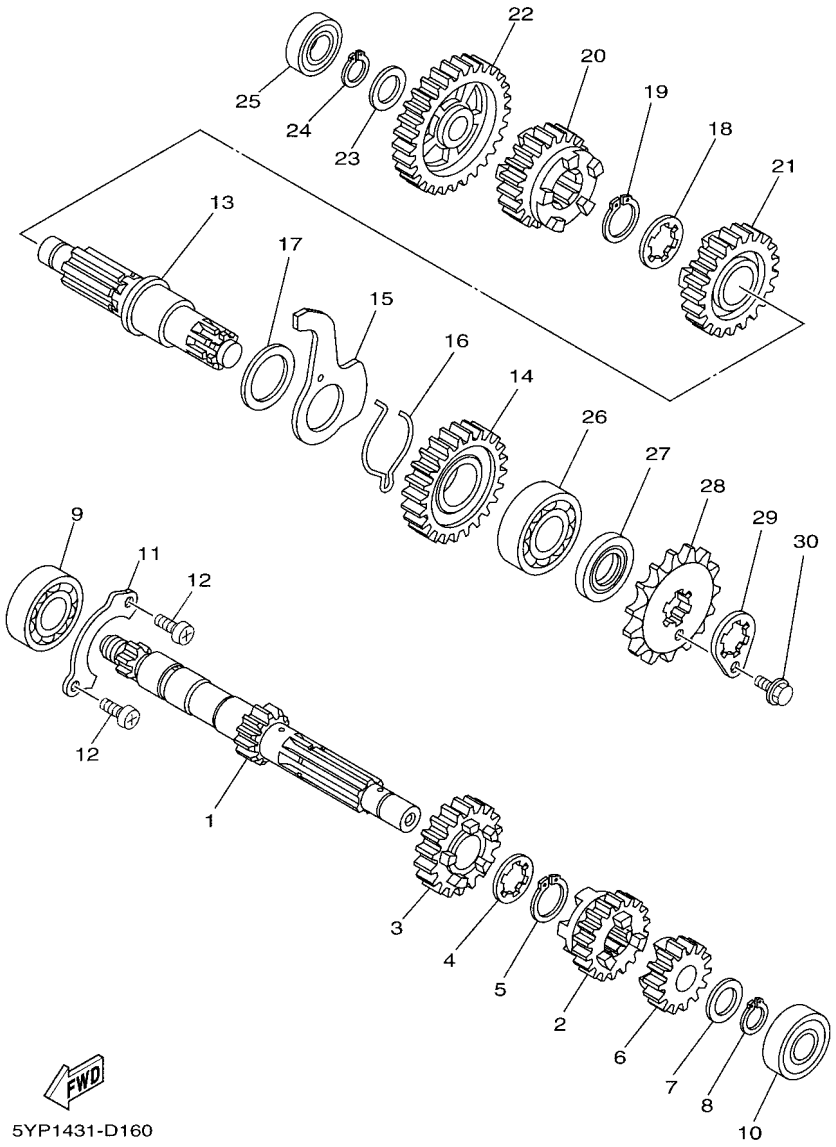

FIG. 16 TRANSMISSION

REF. NO.	PART NO.	DESCRIPTION	55DB	55DC				REMARKS
28	93822–15811	SPROCKET, DRIVE (15T)	1	1				
29	1S8–E7456–00	HOLDER, SPROCKET	1	1				
30	95027–06010	BOLT, FLANGE	1	1				

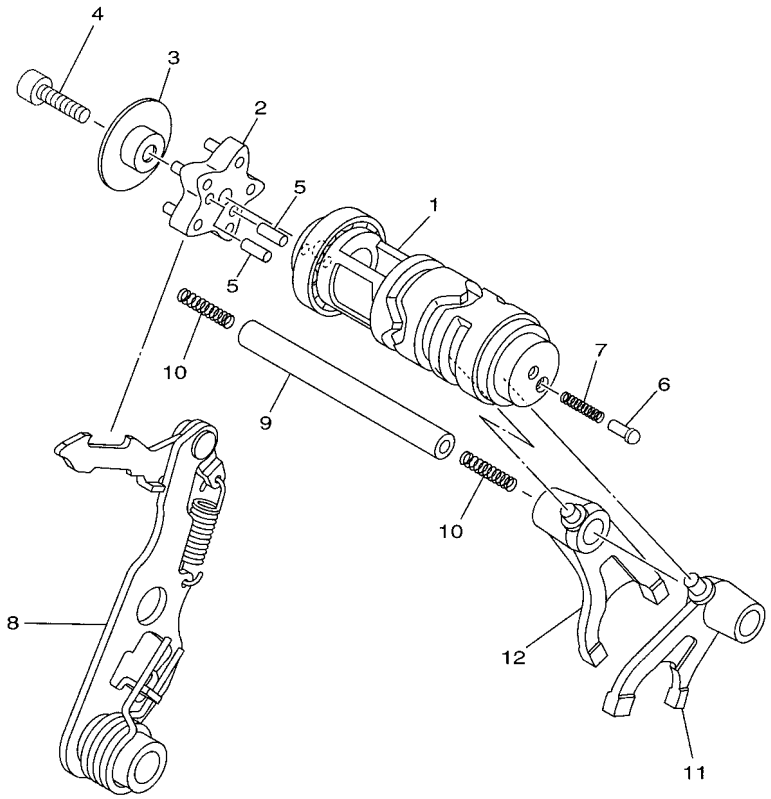

5YP1431-D170

FIG. 17 SHIFT CAM & FORK

REF. NO.	PART NO.	DESCRIPTION	55DB	55DC				REMARKS
1	1S7–E8540–10	SHIFT CAM ASSY	1	1				
2	5YP–E8185–00	SEGMENT	1	1				
3	5YP–E8549–00	STOPPER	1	1				
4	91317–06025	BOLT,HEX.SOCKET HEAD	1	1				
5	93604–12831	PIN, DOWEL	2	2				
6	4TT–E8542–00	POINT, NEUTRAL	1	1				
7	90501–06022	SPRING, COMPRESSION	1	1				
8	5YP–E8120–00	SHIFT LEVER ASSY	1	1				
9	1S8–E8531–00	BAR, SHIFT FORK GUIDE 1	1	1				
10	90501–06800	SPRING, COMPRESSION	2	2				
11	1S7–E8511–00	FORK, SHIFT 1	1	1				
12	1S7–E8512–00	FORK, SHIFT 2	1	1				

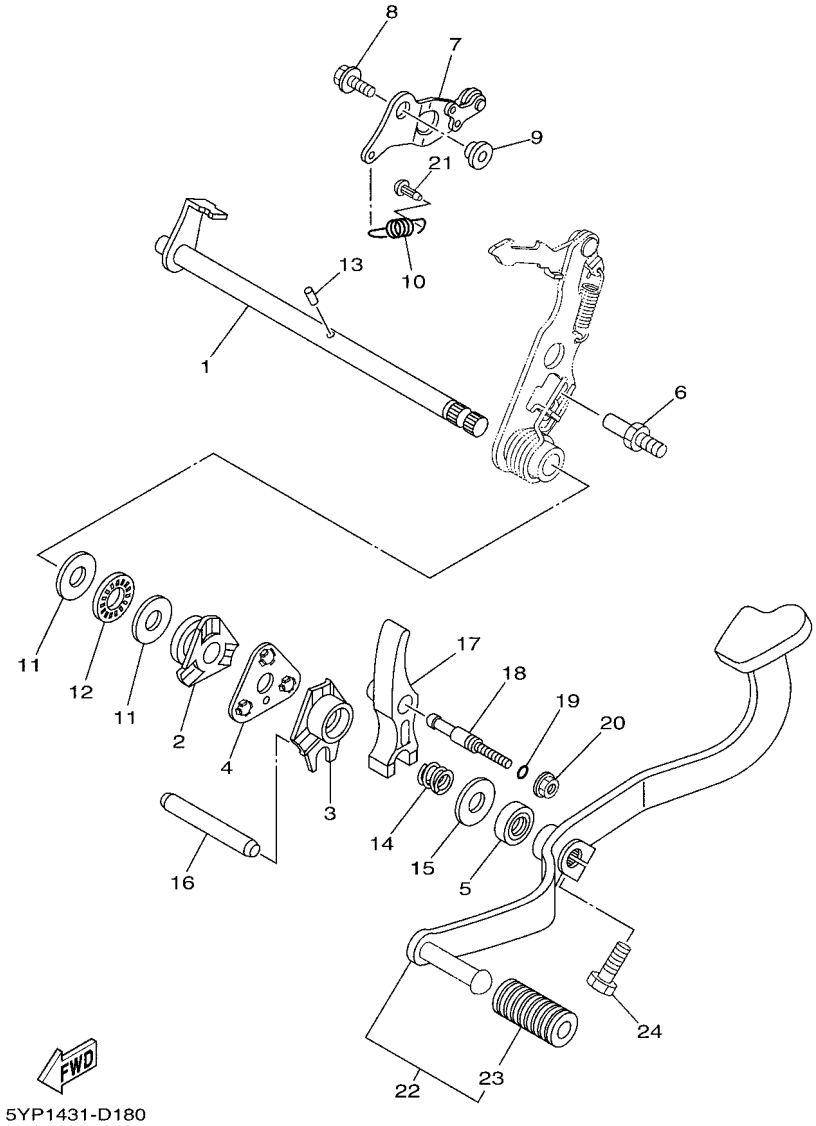

FIG. 18 SHIFT SHAFT

REF. NO.	PART NO.	DESCRIPTION	55DB	55DC				REMARKS
1	5YP–E8101–00	SHIFT SHAFT ASSY	1	1				
2	5YP–E8179–00	GUIDE	1	1				
3	5YP–E8172–00	GUIDE, SHIFT	1	1				
4	5YP–E8181–00	HOLDER, PAWL	1	1				
5	93102–12883	OIL SEAL	1	1				
6	5YP–E8127–00	STOPPER, SCREW	1	1				
7	5YP–E8140–00	STOPPER LEVER ASSY	1	1				
8	95827–06014	BOLT, FLANGE	1	1				
9	1S7–E8175–00	SPACER	1	1				
10	5YP–E8337–00	SPRING	1	1				
11	90201–12817	WASHER, PLATE	2	2				
12	93340–212Y2	BEARING	1	1				
13	93604–10837	PIN, DOWEL	1	1				
14	90501–125E9	SPRING, COMPRESSION	1	1				
15	90201–126A7	WASHER, PLATE	1	1				
16	1S8–E8173–00	PIN, SHIFT	1	1				
17	1S8–E817A–00	ARM, SHIFT 3	1	1				
18	5YP–E8186–00	SCREW, ADJUSTING	1	1				
19	93210–068E9	O-RING	1	1				
20	95707–06500	NUT, FLANGE	1	1				
21	5HV–E6346–00	HOOK, SPRING	1	1				
22	55D–E8110–10	SHIFT PEDAL ASSY	1	1				
23	5H3–E8113–00	.COVER, SHIFT PEDAL	1	1				
24	97027–08020	BOLT, HEXAGON	1	1				

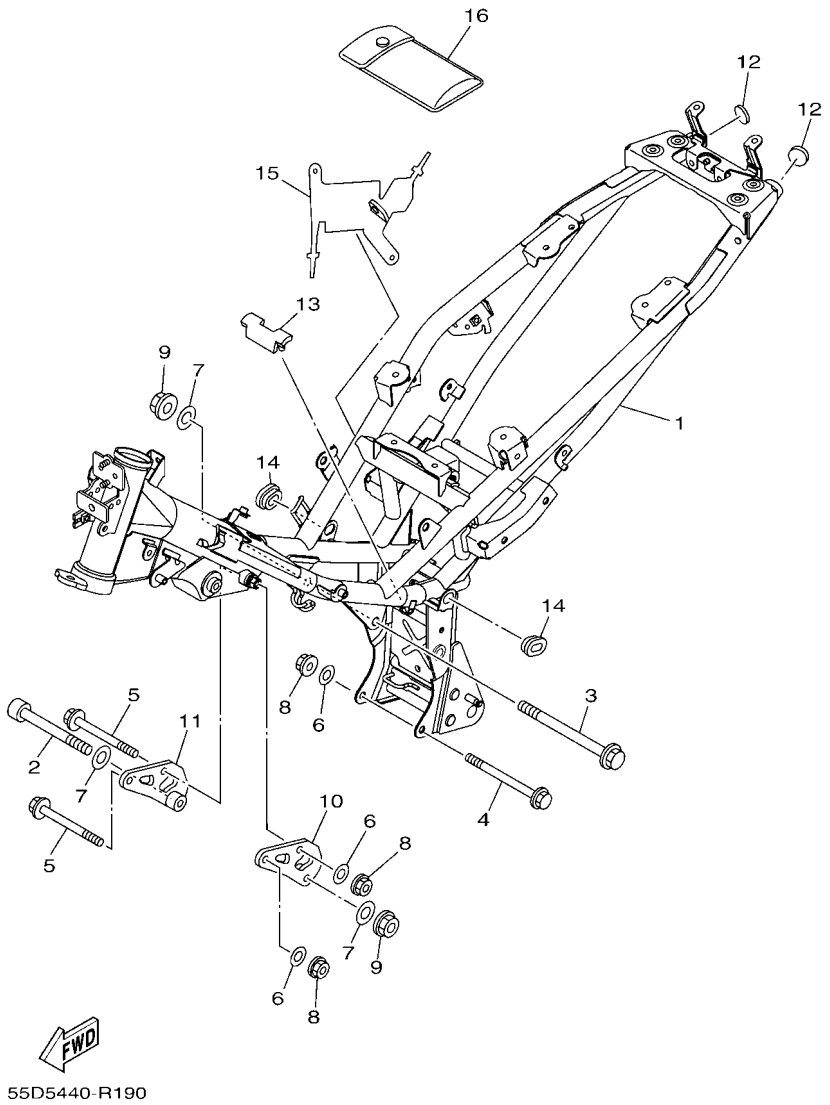

FIG. 19 FRAME

REF. NO.	PART NO.	DESCRIPTION	55DB	55DC				REMARKS
1	55D–F1110–20	FRAME COMP.	1	1				
2	91317–10100	BOLT,HEX.SOCKET HEAD	1	1				
3	90105–10861	BOLT, FLANGE	1	1				
4	90105–088D9	BOLT, FLANGE	1	1				
5	90105–088D8	BOLT, FLANGE	2	2				
6	90201–08804	WASHER, PLATE	3	3				
7	90201–101J1	WASHER, PLATE	3	3				
8	90179–08818	NUT	3	3				
9	90179–10811	NUT	2	2				
10	1S8–F1315–00	STAY, ENGINE 1	1	1				
11	1S8–F1316–00	STAY, ENGINE 2	1	1				
12	1S8–F139R–00	COVER 2	2	2				
13	1S8–F139X–00	DAMPER	1	1				
14	90480–01868	GROMMET	2	2				
15	1S8–F117G–00	PROTECTOR	1	1				
16	55D–F8100–01	TOOL KIT	1	1				

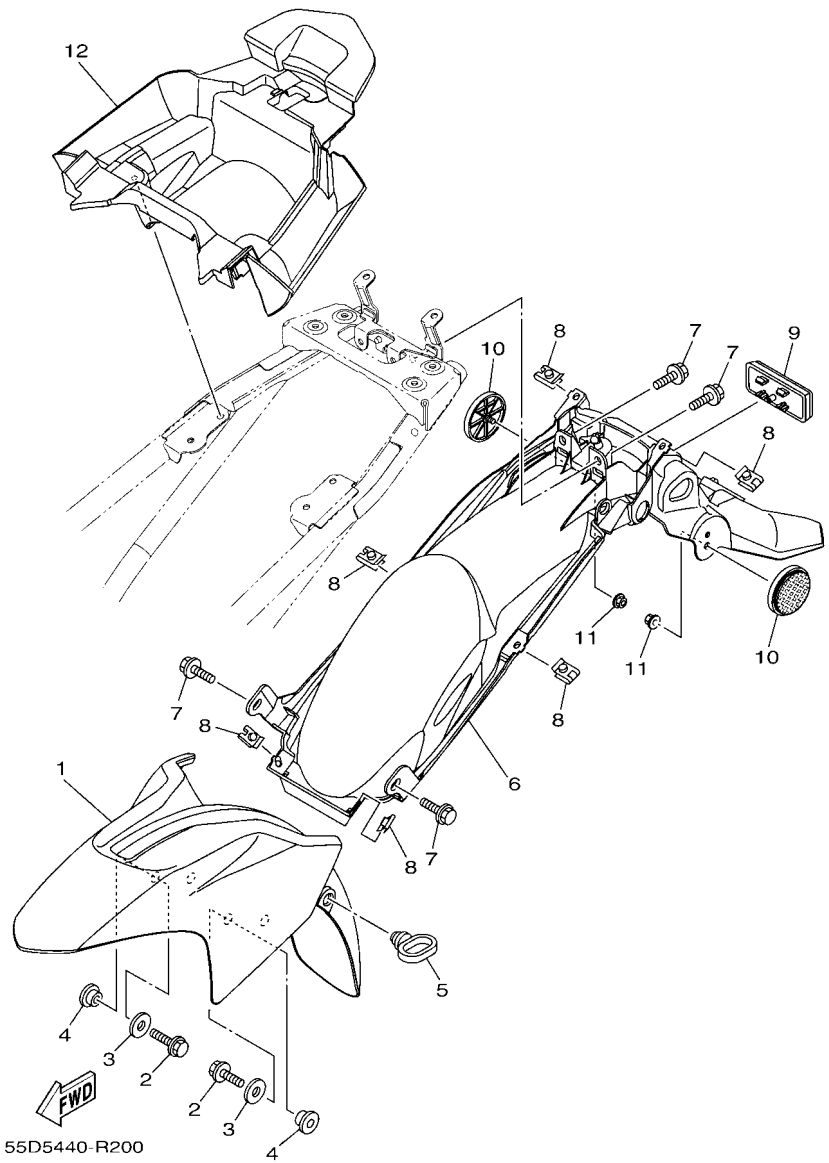

FIG. 20 FENDER

REF. NO.	PART NO.	DESCRIPTION	55DB	55DC				REMARKS
1	55C–F1511–00–P2	FENDER, FRONT	1					UR FOR RM7
	55C–F1511–00–P7	FENDER, FRONT	1					UR FOR VPBC5
	55C–F1511–00–PB	FENDER, FRONT	1					UR FOR CM6
	55C–F1511–00–PC	FENDER, FRONT		1				FOR MNM3
2	95827–06016	BOLT, FLANGE	4	4				
3	90201–06072	WASHER, PLATE	4	4				
4	90387–06804	COLLAR	4	4				
5	15K–F1518–00	HOLDER, CABLE	1	1				
6	55C–F1611–10	FENDER, REAR	1	1				
7	90119–06044	BOLT, WITH WASHER	4	4				
8	90183–05807	NUT, SPRING	6	6				
9	55D–H5130–00	REAR REFLECTOR ASSY	1	1				
10	1CJ–H5111–00	REFLECTOR, FRONT 1	2	2				
11	95702–06500	NUT, FLANGE	2	2				
12	55C–F160E–00	BOX	1	1				

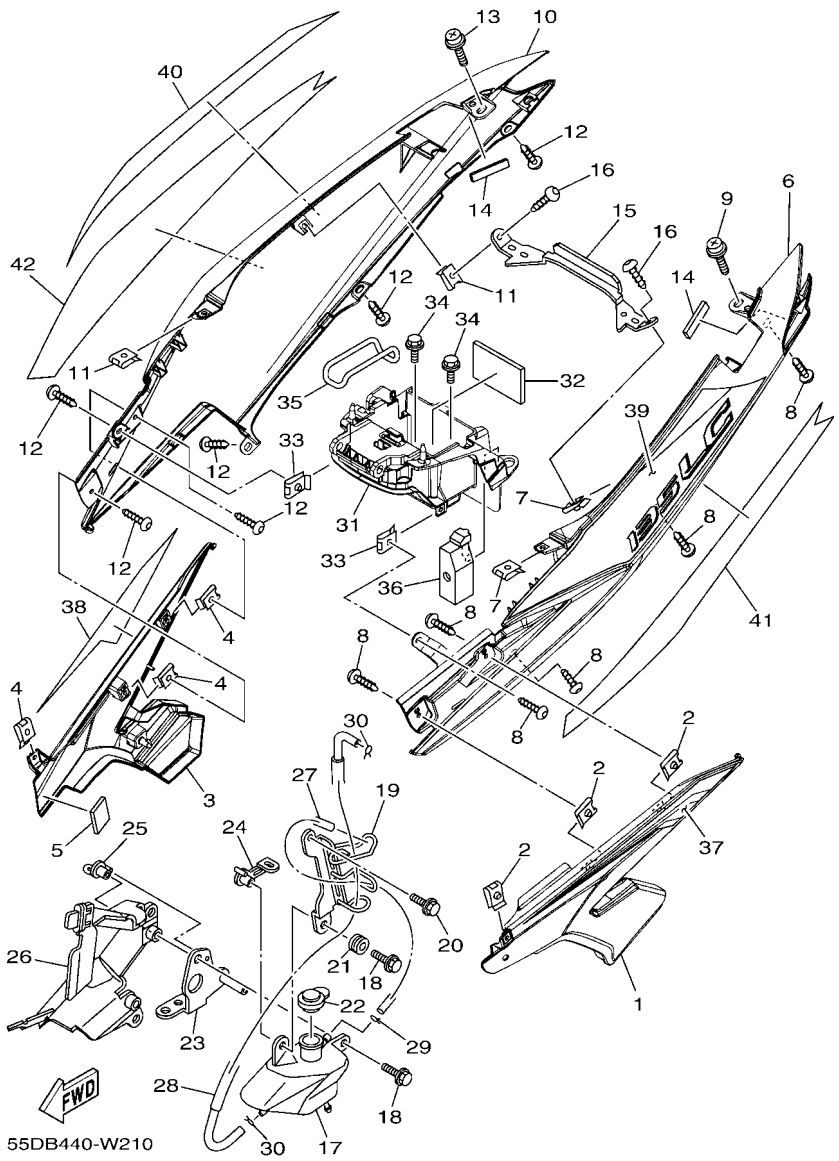

FIG. 21 SIDE COVER

REF. NO.	PART NO.	DESCRIPTION	55DB	55DC				REMARKS
1	55C–F1711–00–P3	COVER, SIDE 1	1					UR MBL2 FOR RM7
	55C–F1711–00–P2	COVER, SIDE 1	1					UR SMX FOR VPBC5
	55C–F1711–00–PB	COVER, SIDE 1	1					UR FOR CM6
2	90183–05807	NUT, SPRING	3					
3	55C–F1721–00–P3	COVER, SIDE 2	1					UR MBL2 FOR RM7
	55C–F1721–00–P2	COVER, SIDE 2	1					UR SMX FOR VPBC5
	55C–F1721–00–PB	COVER, SIDE 2	1					UR FOR CM6
4	90183–05807	NUT, SPRING	3					
5	90520–02806	DAMPER, PLATE	1					
6	55C–F1731–00–P0	COVER, SIDE 3	1					SMX FOR RM7,VPBC5
	55C–F1731–00–P8	COVER, SIDE 3	1					MBL2 FOR CM6
7	90183–05807	NUT, SPRING	2					
8	97707–50012	SCREW, TRUSS HEAD TAPPING	6					
9	90159–06181	SCREW, WITH WASHER	1					
10	55C–F1741–00–P0	COVER, SIDE 4	1					SMX FOR RM7,VPBC5
	55C–F1741–00–P8	COVER, SIDE 4	1					MBL2 FOR CM6
11	90183–05807	NUT, SPRING	2					
12	97707–50012	SCREW, TRUSS HEAD TAPPING	6					
13	90159–06181	SCREW, WITH WASHER	1					
14	90520–04806	DAMPER, PLATE	2					
15	55C–F172E–00	STAY, SIDE COVER 1	1					
16	97707–50012	SCREW, TRUSS HEAD TAPPING	2					
17	1S9–F1871–01	TANK, RECOVERY	1					
18	90119–06044	BOLT, WITH WASHER	2					
19	5YP–F172K–00	BRACKET 1	1					
20	95807–06020	BOLT, FLANGE	1					
21	90480–13805	GROMMET	1					

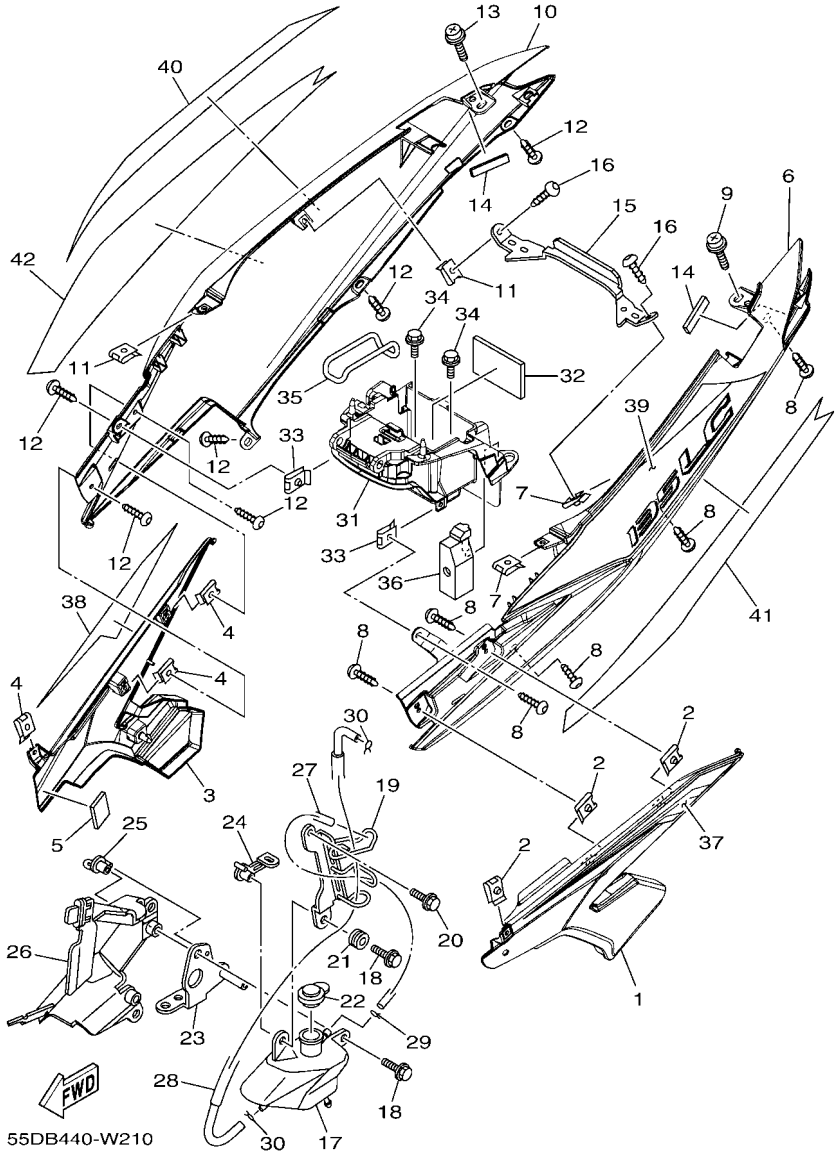

FIG. 21 SIDE COVER

REF. NO.	PART NO.	DESCRIPTION	55DB	55DC				REMARKS
22	5YP–F1875–01	CAP	1					
23	1S8–F172L–00	BRACKET 2	1					
24	5YP–F172M–00	BRACKET 3	1					
25	55P–F1173–00	BOSS, WIRE HOLDER	1					
26	1S8–F172W–00	COVER	1					
27	90445–09823	HOSE	1					
28	55C–F1817–00	PIPE 2	1					
29	90467–08003	CLIP	1					
30	90467–09006	CLIP	2					
31	55C–F177G–00	BOX, BATTERY	1					
32	90520–02807	DAMPER, PLATE	1					
33	90183–05807	NUT, SPRING	2					
34	90119–06044	BOLT, WITH WASHER	2					
35	5VW–H2131–00	BAND, BATTERY	1					
36	1S8–E4293–00	COVER 1	1					
37	55D–F173E–B0	GRAPHIC 1	1					UR FOR RM7
	55D–F173E–C0	GRAPHIC 1	1					UR FOR VPBC5
	55D–F173E–D0	GRAPHIC 1	1					UR FOR CM6
38	55D–F173F–70	GRAPHIC 2	1					UR FOR RM7
	55D–F173F–80	GRAPHIC 2	1					UR FOR VPBC5
	55D–F173F–90	GRAPHIC 2	1					UR FOR CM6
39	55D–F174G–L0	GRAPHIC 3	1					UR FOR RM7
	55D–F174G–M0	GRAPHIC 3	1					UR FOR VPBC5
	55D–F174G–N0	GRAPHIC 3	1					UR FOR CM6
40	55D–F174H–L0	GRAPHIC 4	1					UR FOR RM7
	55D–F174H–M0	GRAPHIC 4	1					UR FOR VPBC5
	55D–F174H–N0	GRAPHIC 4	1					UR FOR CM6

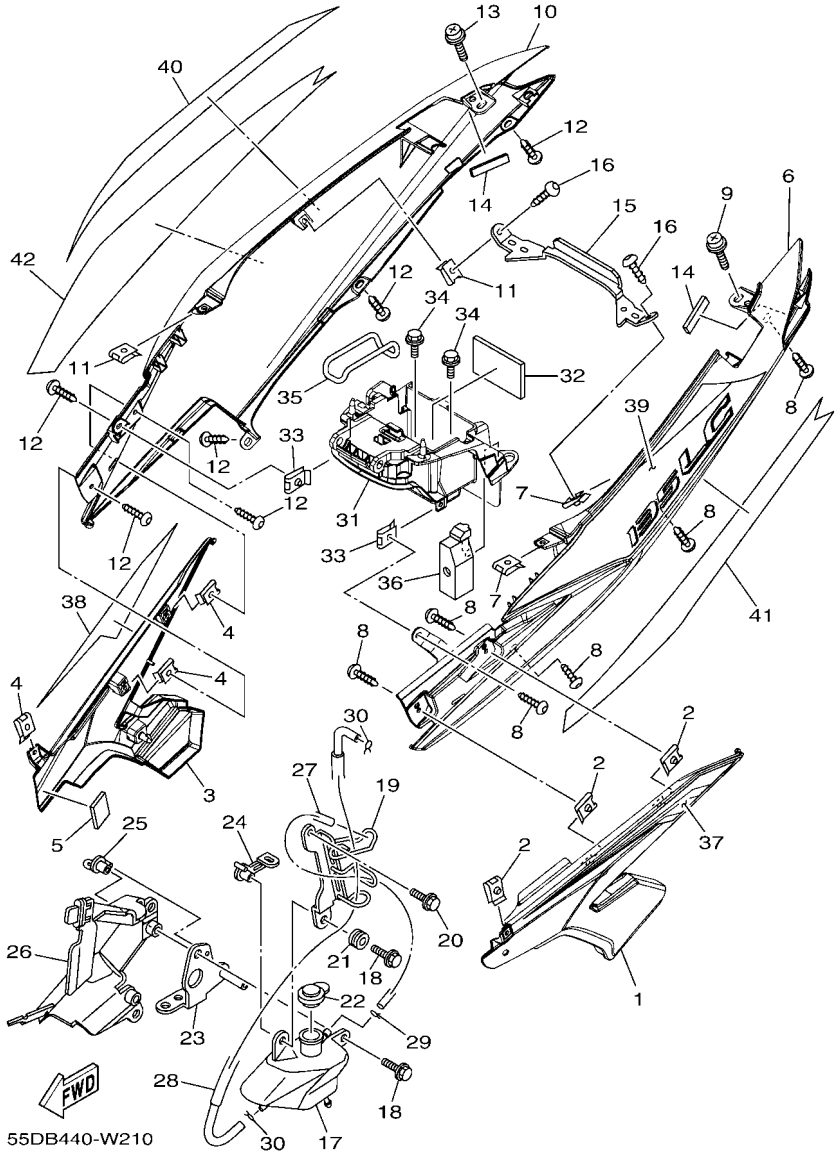

FIG. 21 SIDE COVER

REF. NO.	PART NO.	DESCRIPTION	55DB	55DC				REMARKS
41	55D–F174J–F0	GRAPHIC 5	1					UR FOR RM7
	55D–F174J–G0	GRAPHIC 5	1					UR FOR VPBC5
	55D–F174J–H0	GRAPHIC 5	1					UR FOR CM6
42	55D–F174K–F0	GRAPHIC 6	1					UR FOR RM7
	55D–F174K–G0	GRAPHIC 6	1					UR FOR VPBC5
	55D–F174K–H0	GRAPHIC 6	1					UR FOR CM6

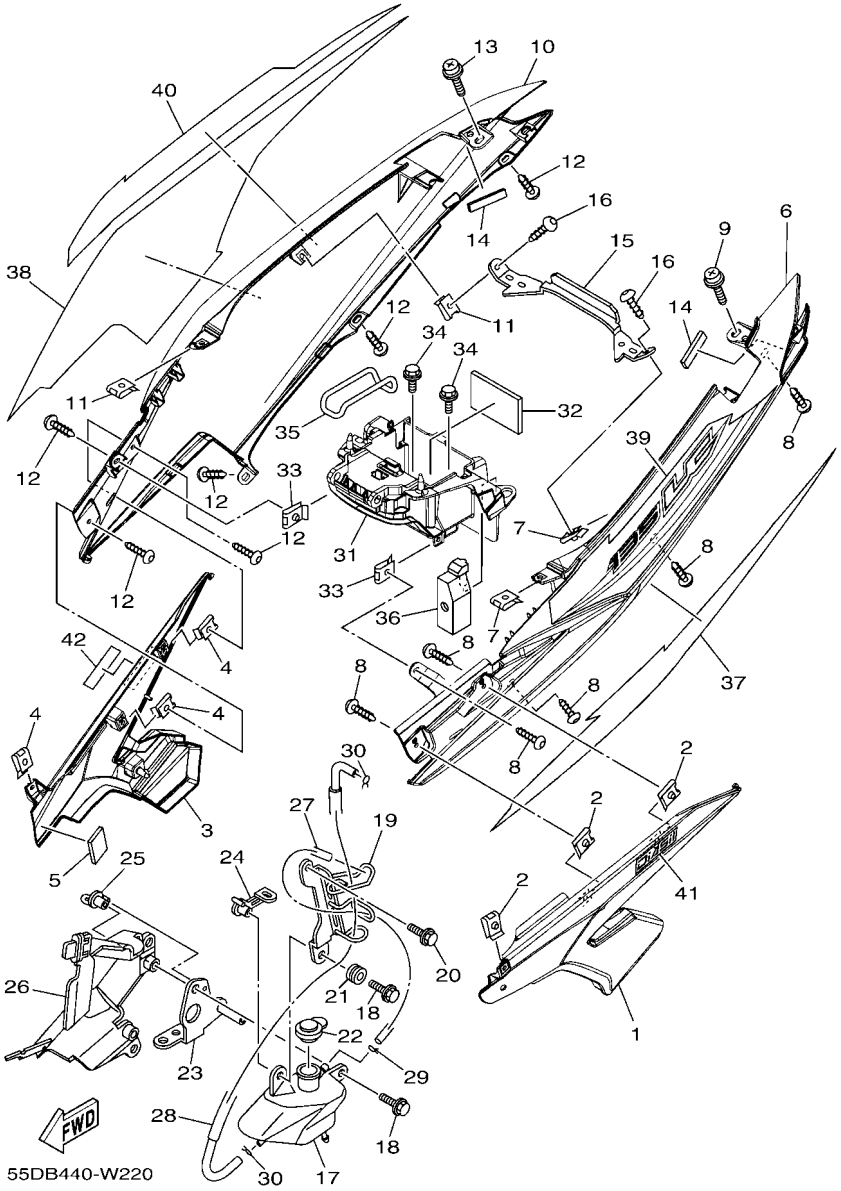

FIG. 22 SIDE COVER 2

REF. NO.	PART NO.	DESCRIPTION	55DB	55DC				REMARKS
1	55C–F1711–00–PC	COVER, SIDE 1		1				MDOM2 FOR MNM3
2	90183–05807	NUT, SPRING		3				
3	55C–F1721–00–PC	COVER, SIDE 2		1				MDOM2 FOR MNM3
4	90183–05807	NUT, SPRING		3				
5	90520–02806	DAMPER, PLATE		1				
6	55C–F1731–00–P9	COVER, SIDE 3		1				MNM3
7	90183–05807	NUT, SPRING		2				
8	97707–50012	SCREW, TRUSS HEAD TAPPING		6				
9	90159–06181	SCREW, WITH WASHER		1				
10	55C–F1741–00–P9	COVER, SIDE 4		1				MNM3
11	90183–05807	NUT, SPRING		2				
12	97707–50012	SCREW, TRUSS HEAD TAPPING		6				
13	90159–06181	SCREW, WITH WASHER		1				
14	90520–04806	DAMPER, PLATE		2				
15	55C–F172E–00	STAY, SIDE COVER 1		1				
16	97707–50012	SCREW, TRUSS HEAD TAPPING		2				
17	1S9–F1871–01	TANK, RECOVERY		1				
18	90119–06044	BOLT, WITH WASHER		2				
19	5YP–F172K–00	BRACKET 1		1				
20	95807–06020	BOLT, FLANGE		1				
21	90480–13805	GROMMET		1				
22	5YP–F1875–01	CAP		1				
23	1S8–F172L–00	BRACKET 2		1				
24	5YP–F172M–00	BRACKET 3		1				
25	55P–F1173–00	BOSS, WIRE HOLDER		1				
26	1S8–F172W–00	COVER		1				
27	90445–09823	HOSE		1				

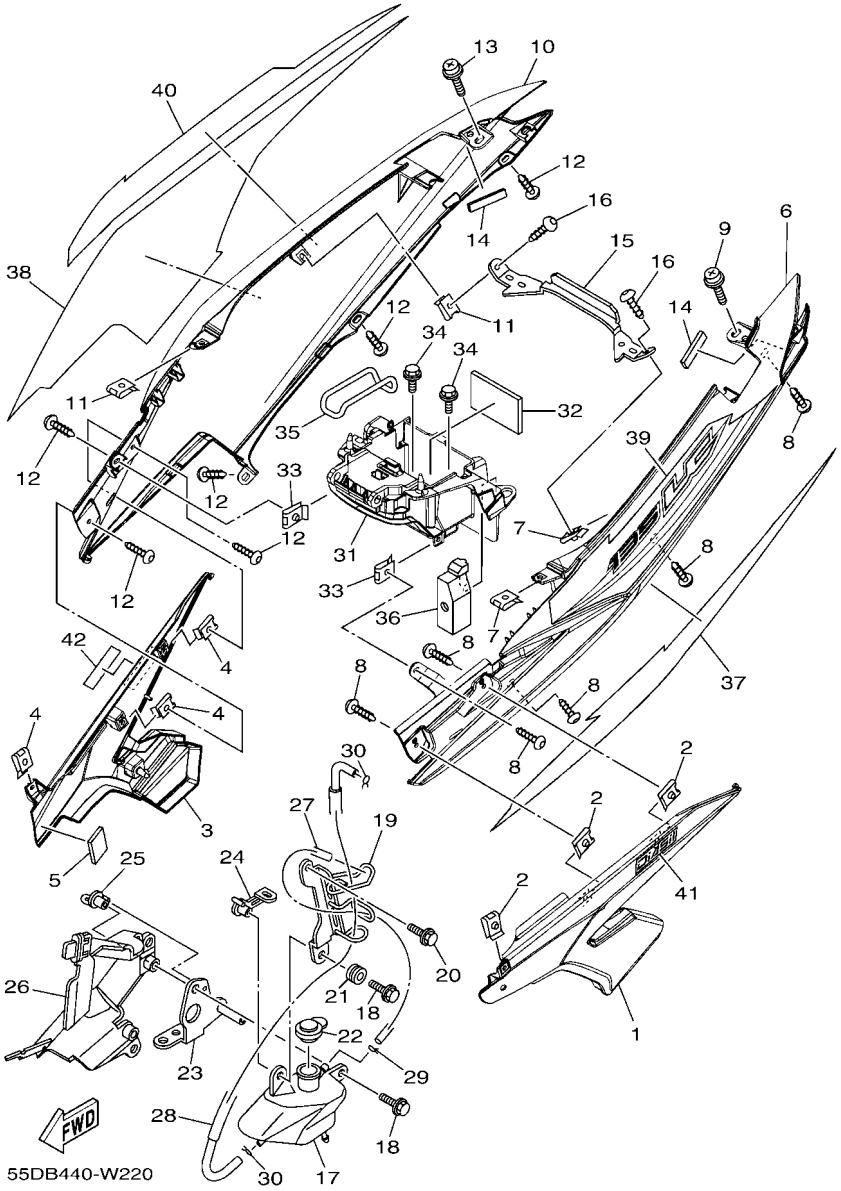

FIG. 22 SIDE COVER 2

REF. NO.	PART NO.	DESCRIPTION	55DB	55DC				REMARKS
28	55C–F1817–00	PIPE 2		1				
29	90467–08003	CLIP		1				
30	90467–09006	CLIP		2				
31	55C–F177G–00	BOX, BATTERY		1				
32	90520–02807	DAMPER, PLATE		1				
33	90183–05807	NUT, SPRING		2				
34	90119–06044	BOLT, WITH WASHER		2				
35	5VW–H2131–00	BAND, BATTERY		1				
36	1S8–E4293–00	COVER 1		1				
37	55D–F173E–E0	GRAPHIC 1		1				
38	55D–F173F–A0	GRAPHIC 2		1				
39	55D–F174G–P0	GRAPHIC 3		1				
40	55D–F174H–P0	GRAPHIC 4		1				
41	55D–F1781–30	EMBLEM 1		1				
42	55D–F1781–30	EMBLEM 1		1				

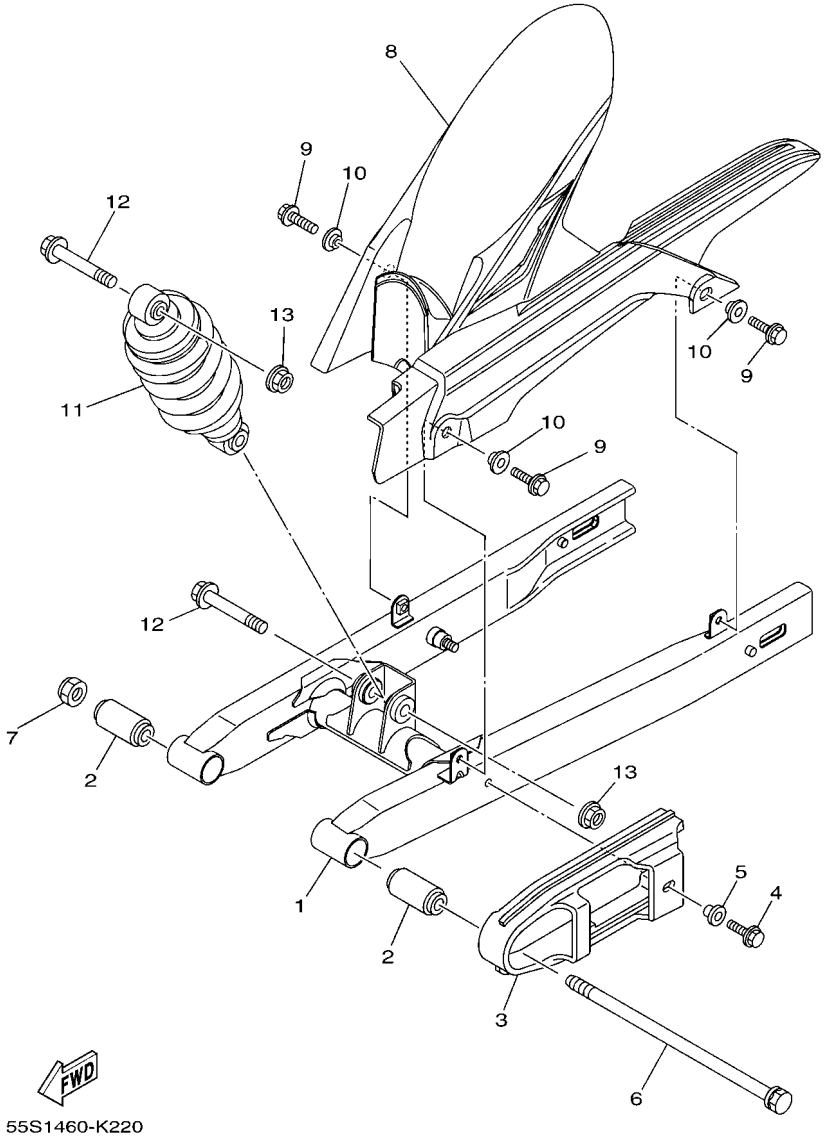

FIG. 23 REAR ARM & SUSPENSION

REF. NO.	PART NO.	DESCRIPTION	55DB	55DC				REMARKS
1	55D–F2110–00	REAR ARM COMP.	1	1				
2	5B9–F2123–00	BUSH 1	2	2				
3	1S8–F2151–00	SEAL, GUARD	1	1				
4	95807–06012	BOLT, FLANGE	1	1				
5	90387–06681	COLLAR	1	1				
6	50C–F2141–00	SHAFT, PIVOT	1	1				
7	95617–12100	NUT, U	1	1				
8	55D–F1650–00	REAR FENDER COMP.	1	1				
9	95827–06014	BOLT, FLANGE	3	3				
10	90387–07819	COLLAR	3	3				
11	55C–F2210–00	SHOCK ABSORBER ASSY, REAR	1	1				
12	90105–10323	BOLT, FLANGE	2	2				
13	95602–10200	NUT, S/L FLANGE	2	2				

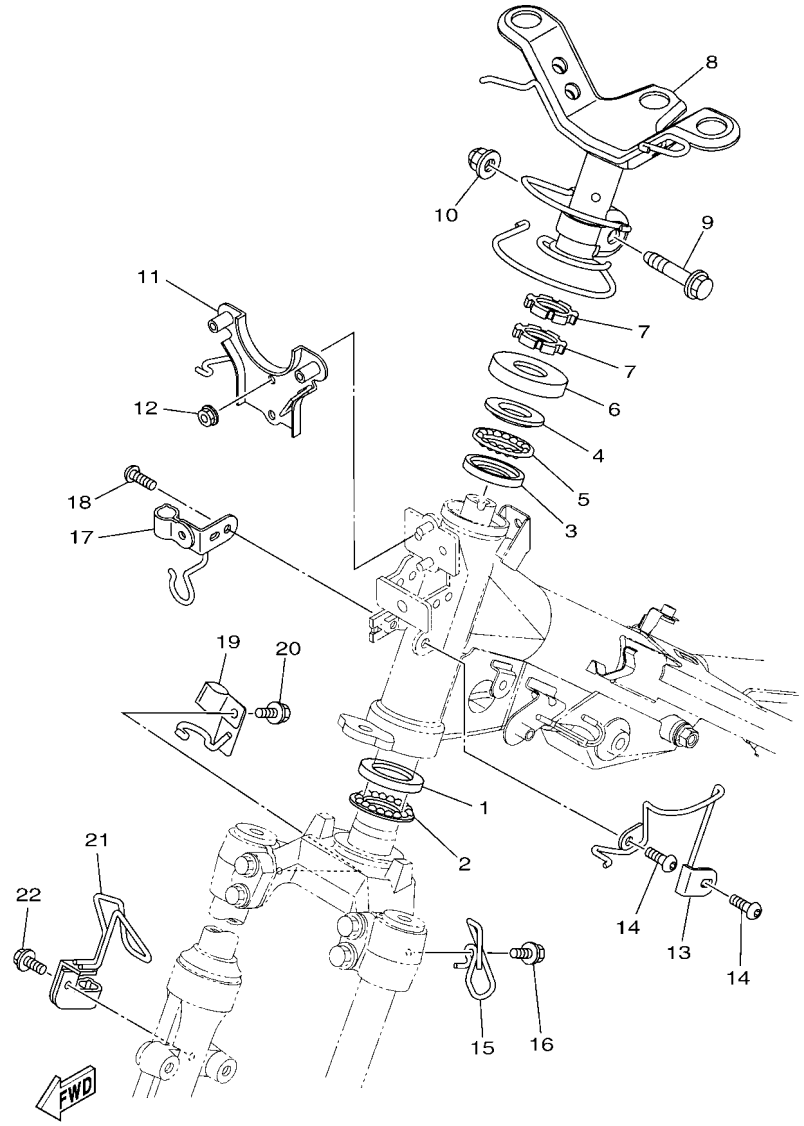

FIG. 24 STEERING

REF. NO.	PART NO.	DESCRIPTION	55DB	55DC				REMARKS
1	1KL–F3412–10	RACE, BALL 2	1	1				
2	5VL–F341E–10	RETAINER, BALL BEARING	1	1				
3	4RT–F3412–10	RACE, BALL 2	1	1				
4	4RT–F3411–10	RACE, BALL 1	1	1				
5	1P6–F341E–10	RETAINER, BALL BEARING	1	1				
6	5TL–F3416–00	COVER, BALL RACE 2	1	1				
7	90179–25802	NUT	2	2				
8	55C–F3461–00	BRACKET, HANDLE	1	1				
9	90105–10036	BOLT, FLANGE	1	1				
10	90185–10154	NUT, SELF-LOCKING	1	1				
11	55C–F331A–10	STAY	1	1				
12	95707–06500	NUT, FLANGE	2	2				
13	55C–F1161–10	HOLDER, CABLE	1	1				
14	92017–06010	BOLT, BUTTON HEAD	2	2				
15	55C–F3389–00	GUIDE, CABLE	1	1				
16	90119–06044	BOLT, WITH WASHER	1	1				
17	55C–F5875–10	HOLDER, BRAKE HOSE 1	1	1				
18	92017–06010	BOLT, BUTTON HEAD	2	2				
19	55P–F587A–00	HOLDER, BRAKE HOSE 4	1	1				
20	95807–06012	BOLT, FLANGE	1	1				
21	55C–F5876–10	HOLDER, BRAKE HOSE 2	1	1				
22	95807–06012	BOLT, FLANGE	1	1				

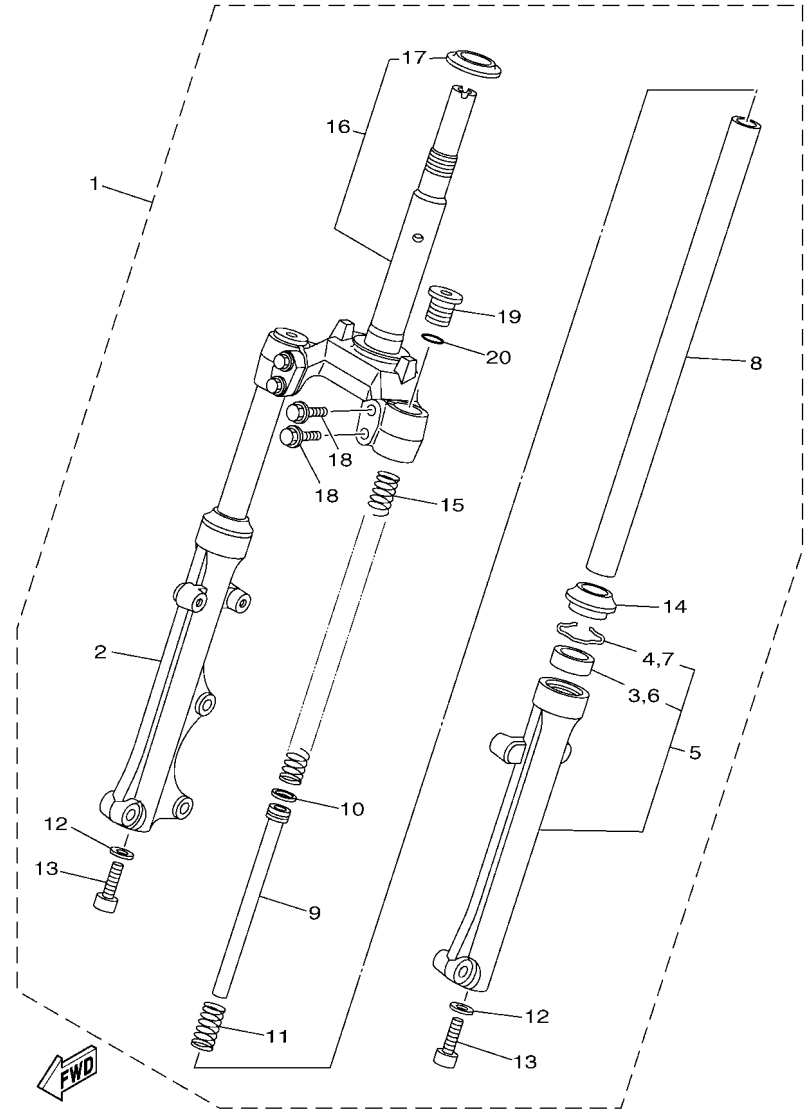

50C1460-K240

FIG. 25 FRONT FORK

REF. NO.	PART NO.	DESCRIPTION	55DB	55DC				REMARKS
1	55D–F3100–10	FRONT FORK ASSY	1	1				
2	55P–F3136–10	.TUBE, OUTER 2	1	1				
3	4UV–F3145–00	..OIL SEAL	1	1				
4	5P0–F3156–00	..RING, SNAP	1	1				
5	55P–F3126–10	.TUBE, OUTER (L.H)	1	1				
6	4UV–F3145–00	..OIL SEAL	1	1				
7	5P0–F3156–00	..RING, SNAP	1	1				
8	55C–F3110–00	.INNER TUBE COMP.1	2	2				
9	5P2–F3170–00	.CYLINDER COMP., FRONT FORK	2	2				
10	2JG–F3157–00	.RING, PISTON	2	2				
11	5TF–F3152–00	.SPRING, SUB	2	2				
12	509–F3158–L0	.GASKET	2	2				
13	31D–F3181–50	.BOLT, HEXAGON SOCKET HEAD	2	2				
14	5LL–F3144–00	.SEAL, DUST	2	2				
15	50C–F3141–00	.SPRING, FRONT FORK	2	2				
16	50C–F3340–10	.UNDER BRACKET COMP.	1	1				
17	156–F3411–00	..RACE, BALL 1	1	1				
18	5YW–F3346–10	.BOLT 1	4	4				
19	4VK–F3111–10	.BOLT, CAP	2	2				
20	2JG–F3147–00	.O-RING	2	2				

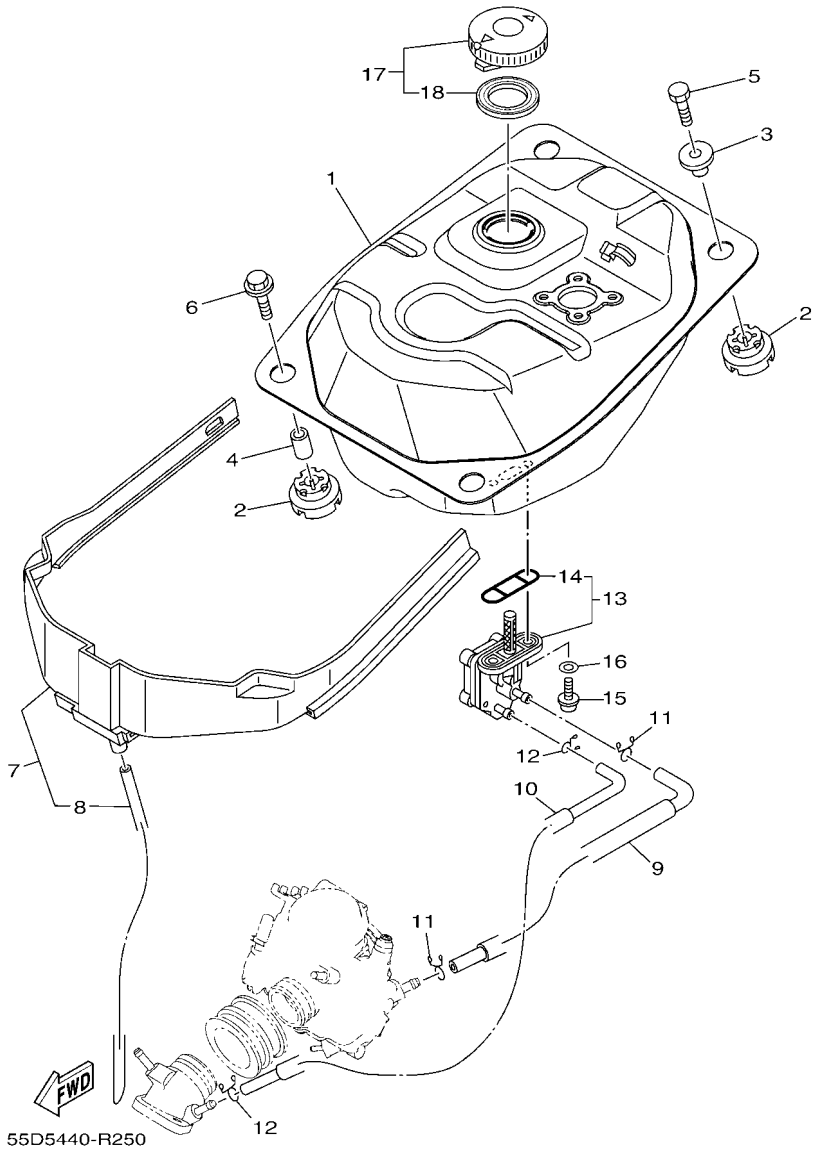

FIG. 26 FUEL TANK

REF. NO.	PART NO.	DESCRIPTION	55DB	55DC				REMARKS
1	1S8–F4110–00	FUEL TANK COMP.	1	1				
2	1S8–F4339–00	GROMMET	4	4				
3	1S8–F4638–00	COLLAR	2	2				
4	1S8–F4397–00	COLLAR	2	2				
5	97007–06025	BOLT	2	2				
6	90119–06190	BOLT, WITH WASHER	2	2				
7	21S–F4141–00	PROTECTOR, FUEL TANK	1	1				
8	90445–07812	.HOSE	1	1				
9	55C–F4311–00	PIPE, FUEL 1	1	1				
10	55C–F4312–00	PIPE 2	1	1				
11	90467–09006	CLIP	2	2				
12	90467–08075	CLIP	2	2				
13	5YP–F4500–01	FUEL COCK ASSY 1	1	1				
14	4X8–24512–00	.O-RING	1	1				
15	90149–06011	SCREW	2	2				
16	90202–05193	WASHER, PLATE	2	2				
17	5LW–F4610–01	CAP ASSY	1	1				
18	3T5–24612–20	.PACKING, CAP	1	1				

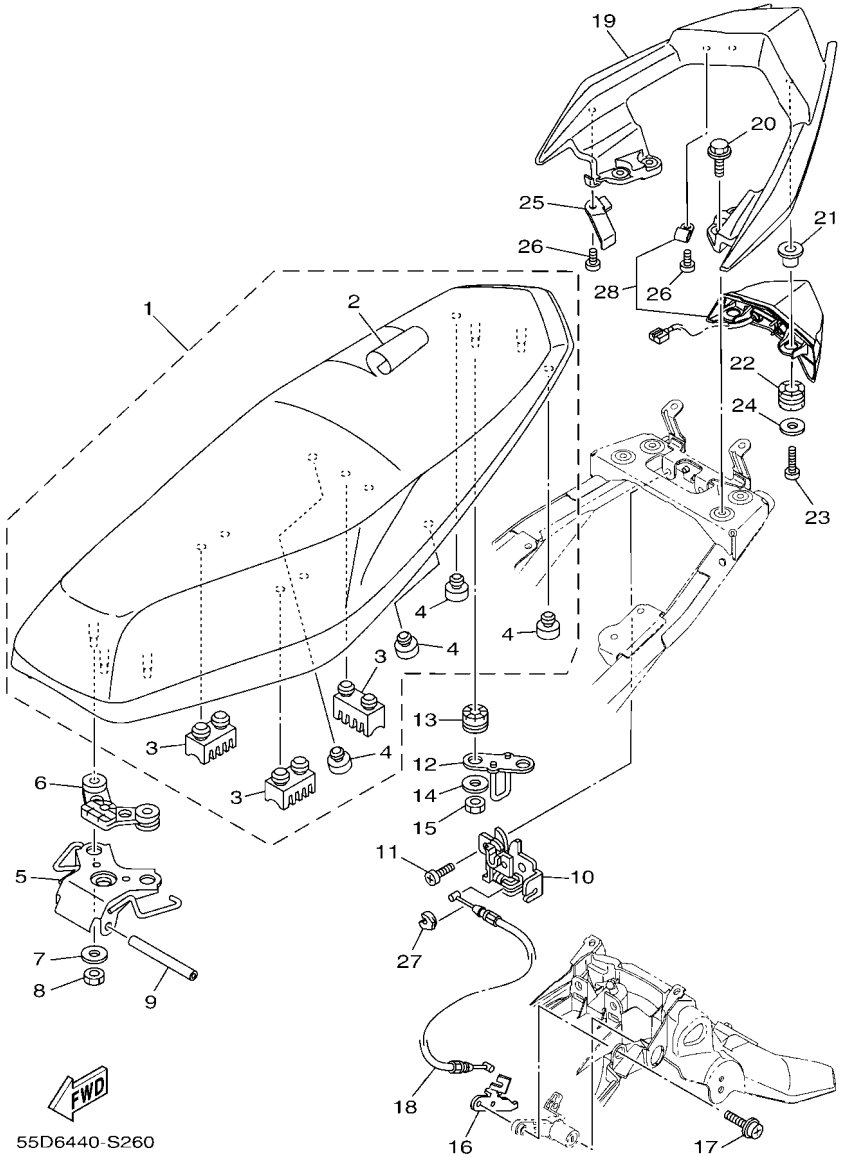

FIG. 27 SEAT

REF. NO.	PART NO.	DESCRIPTION	55DB	55DC				REMARKS
1	55C–F4730–10	DOUBLE SEAT ASSY	1	1				
2	55C–F470F–10	.SEAT COVER COMP.	1	1				
3	5TF–F4723–00	.DAMPER, SEAT	3	3				
4	4HF–F4741–00	.PAD, SEAT	4	4				
5	55C–F4726–00	HINGE, SEAT	1	1				
6	1S8–F4742–00	GROMMET	1	1				
7	90201–068N7	WASHER, PLATE	3	3				
8	95307–06600	NUT	3	3				
9	2WB–F4727–00	PIN, SEAT FITTING	1	1				
10	1DY–F4780–00	SEAT LOCK ASSY	1	1				
11	98507–06012	SCREW, PAN HEAD	2	2				
12	1S8–F4728–00	BRACKET, SEAT	1	1				
13	90480–14872	GROMMET	2	2				
14	90201–06071	WASHER, PLATE	2	2				
15	95307–06600	NUT	2	2				
16	55C–F117K–00	STAY, LOCK	1	1				
17	90159–06033	SCREW, WITH WASHER	1	1				
18	55C–F478E–10	CABLE, SEAT LOCK	1	1				
19	55D–F4773–00–P0	HANDLE, SEAT	1					UR FOR RM7
	55D–F4773–00–P2	HANDLE, SEAT	1					UR FOR VPBC5
	55D–F4773–00–P5	HANDLE, SEAT	1					UR FOR CM6
	55D–F4773–00–P3	HANDLE, SEAT		1				SMX FOR MNM3
20	95827–06020	BOLT, FLANGE	4	4				
21	90387–061N0	COLLAR	2	2				
22	55D–F4742–00	GROMMET	2	2				
23	98507–06020	SCREW, PAN HEAD	2	2				
24	90201–06882	WASHER, PLATE	2	2				

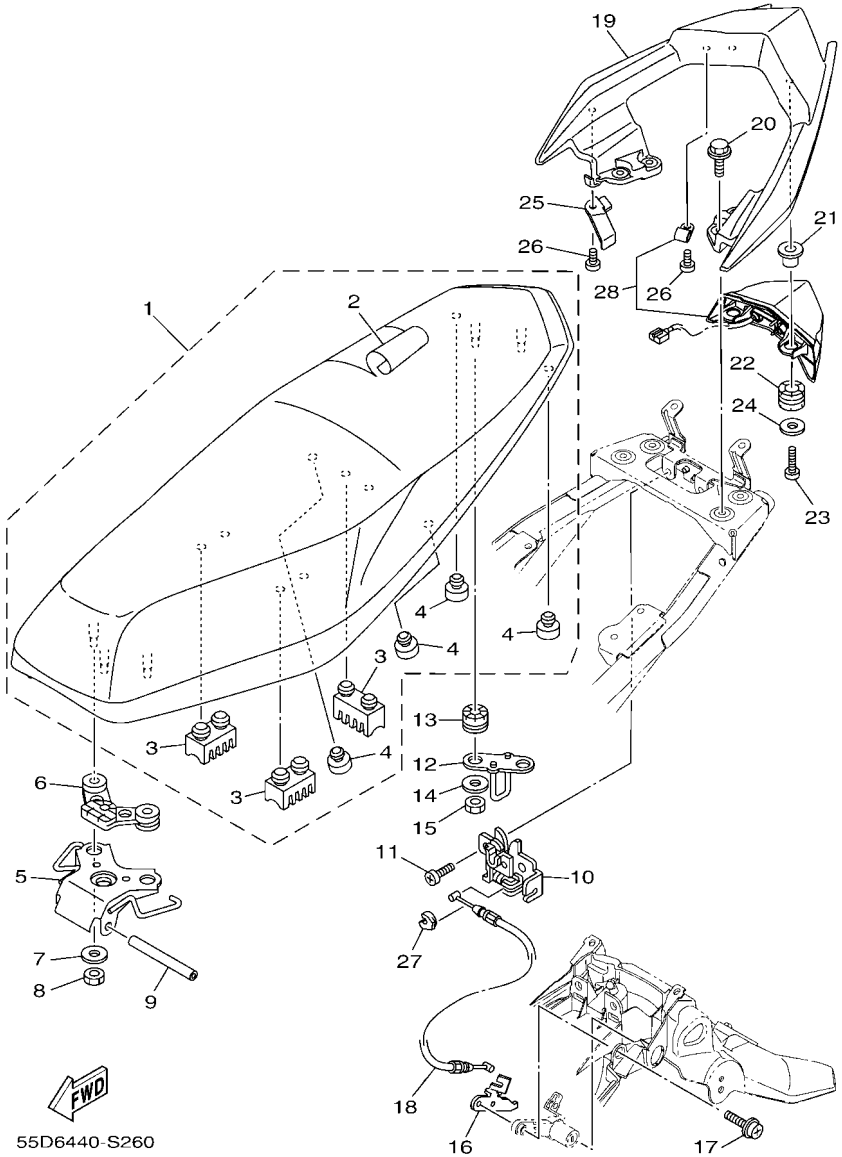

FIG. 27 SEAT

REF. NO.	PART NO.	DESCRIPTION	55DB	55DC				REMARKS
25	55D–F464U–00	PLATE, STOPPER	1	1				
26	98507–05010	SCREW, PAN HEAD	2	2				
27	1S8–F4768–00	STOPPER	1	1				
28	55D–H4790–00	HIGH MOUNT STOP LAMP ASSY	1	1				

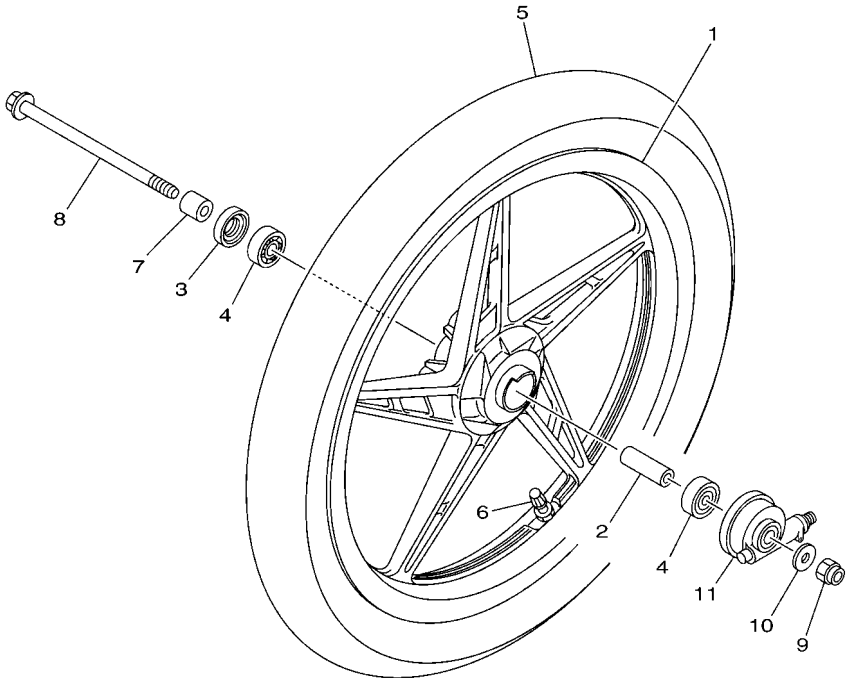

55C1440-K270

FIG. 28 FRONT WHEEL

REF. NO.	PART NO.	DESCRIPTION	55DB	55DC				REMARKS
1	1S8–F5168–00–33	CAST WHEEL, FRONT	1					YB
	1S8–F5168–00–P3	CAST WHEEL, FRONT		1				MDOM2 FOR MNM3
2	90560–10292	SPACER	1	1				
3	93106–20816	OIL SEAL	1	1				
4	93306–300X8	BEARING	2	2				
5	94107–17873	TIRE(70/90-17M/C 38P V421F TL)	1	1				VEE RUBBER
6	93900–00817	VALVE, RIM (TR412)	1	1				
7	90387–10277	COLLAR	1	1				
8	3NA–F5181–01	AXLE, WHEEL	1	1				
9	90185–10091	NUT, SELF-LOCKING	1	1				
10	90201–101J1	WASHER, PLATE	1	1				
11	5TN–F5190–01	GEAR UNIT ASSY	1	1				

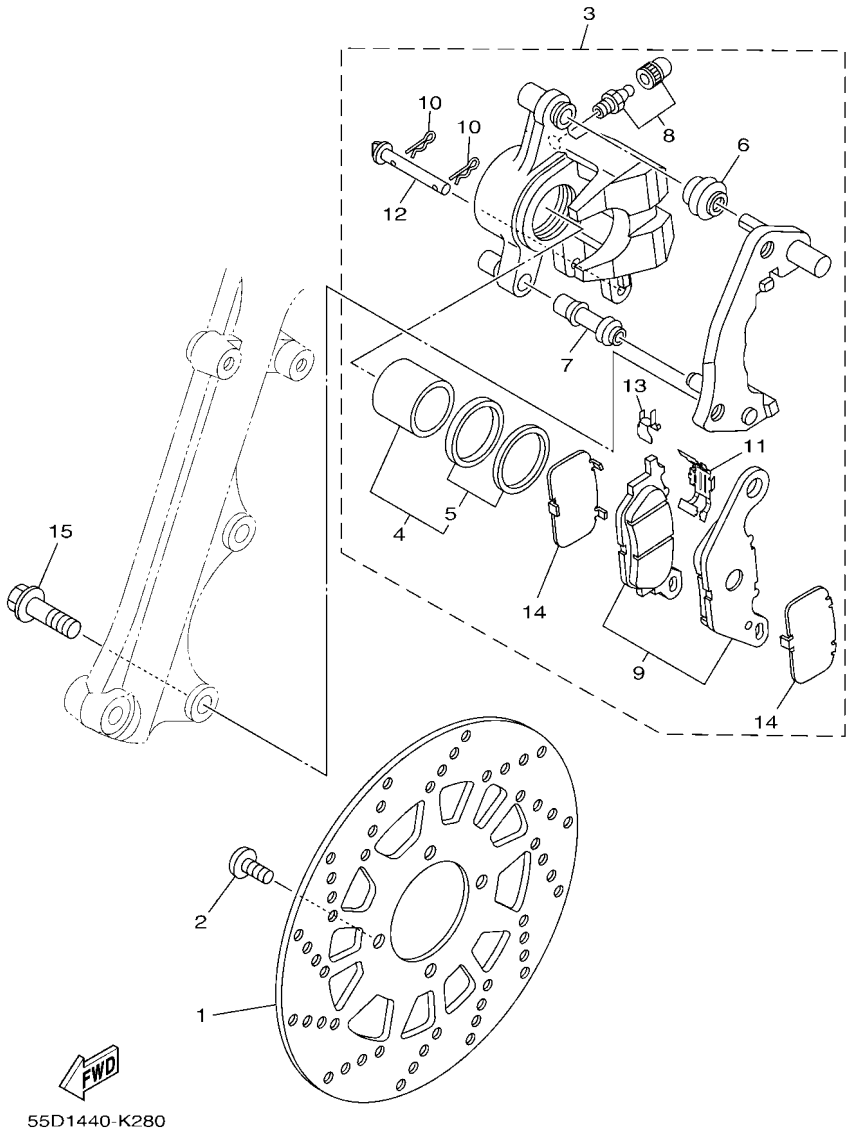

FIG. 29 FRONT BRAKE CALIPER

REF. NO.	PART NO.	DESCRIPTION	55DB	55DC				REMARKS
1	31D–F582U–00	DISK, BRAKE (RIGHT)	1	1				
2	90111–08853	BOLT,HEX. SOCKET BUTTON	4	4				
3	44S–F580U–02	CALIPER ASSY (RIGHT)	1					
	44D–F580U–02	CALIPER ASSY (RIGHT)		1				
4	5P0–F5802–00	.PISTON ASSY, CALIPER	1	1				
5	5YP–F5803–50	..CALIPER SEAL KIT	1	1				
6	5YP–F5917–00	.BOOT, CALIPER	1	1				
7	5YP–F5937–00	.BOOT 2	1	1				
8	4C9–W0048–00	.BLEED SCREW KIT	1	1				
9	3C1–F5805–10	.BRAKE PAD KIT	1	1				
10	5YP–F5925–01	.CLIP	2	2				
11	5P0–F5919–01	.SUPPORT, PAD	1	1				
12	5YP–F5924–00	.PIN, PAD	1	1				
13	5YP–F5939–00	.CLIP, PAD	1	1				
14	5P0–F5827–00	.SHIM, CALIPER	2	2				
15	90105–10831	BOLT, FLANGE	2	2				

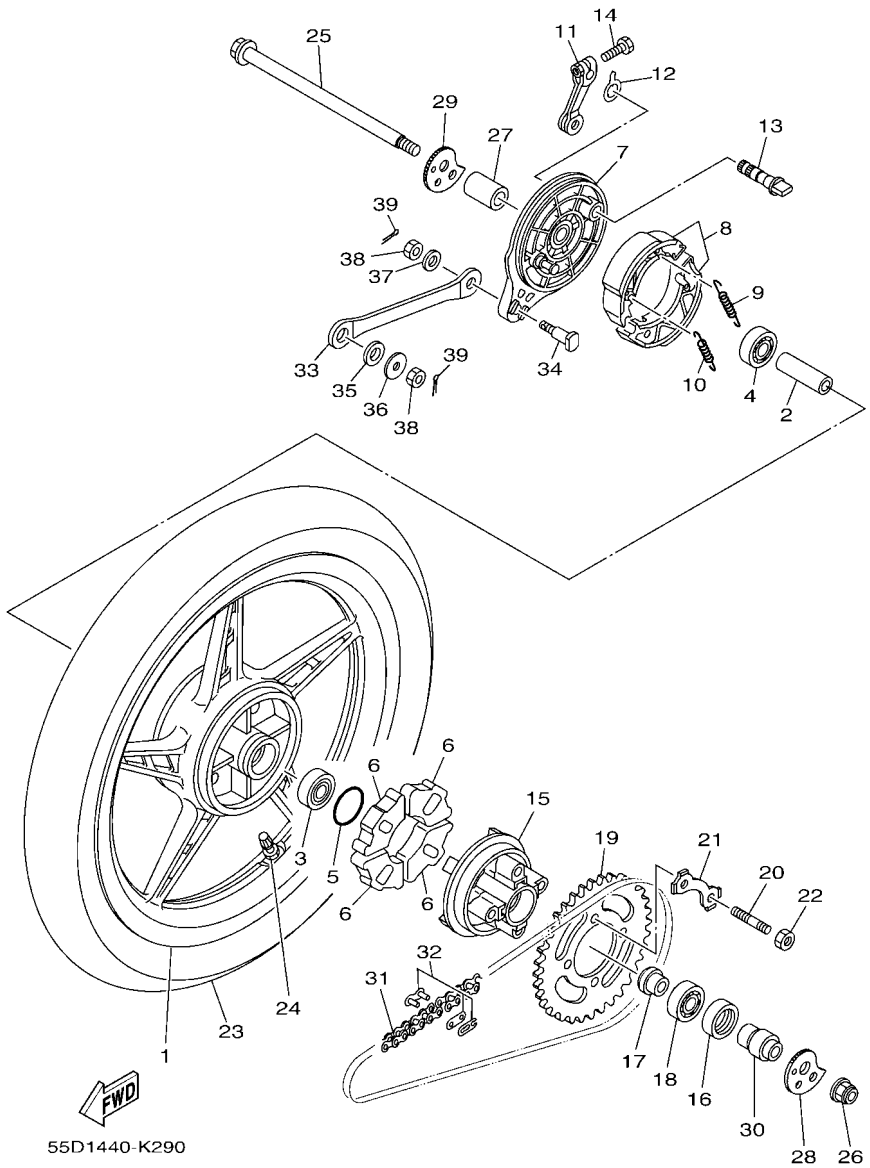

FIG. 30 REAR WHEEL

REF. NO.	PART NO.	DESCRIPTION	55DB	55DC				REMARKS
1	1S8–F5338–00–33	CAST WHEEL, REAR	1					YB
	1S8–F5338–00–P3	CAST WHEEL, REAR		1				MDOM2 FOR MNM3
2	90560–12145	SPACER	1	1				
3	93306–301YN	BEARING	1	1				
4	93306–301YM	BEARING	1	1				
5	93210–41041	O-RING	1	1				
6	1S8–F5364–00	DAMPER	4	4				
7	1S8–F5321–00–33	PLATE, BRAKE SHOE	1	1				YB
8	5YP–F530K–00	BRAKE SHOE SET	1	1				
9	90506–12001	SPRING, TENSION	1	1				
10	90506–15001	SPRING, TENSION	1	1				
11	1S8–F5355–00	LEVER, CAMSHAFT	1	1				
12	5LW–F533A–00	PLATE, INDICATOR	1	1				
13	4UV–F5351–00	CAMSHAFT	1	1				
14	90101–06278	BOLT	1	1				
15	1S8–F5366–00	CLUTCH, HUB	1	1				
16	93106–26815	OIL SEAL	1	1				
17	90387–127Y0	COLLAR	1	1				
18	93306–004XB	BEARING	1	1				
19	3YR–F5439–10	SPROCKET, DRIVEN (39T)	1	1				
20	90116–08017	BOLT, STUD	4	4				
21	5XK–F5412–00	WASHER	2	2				
22	90170–08258	NUT	4	4				
23	94108–17868	TIRE(80/90-17M/C 50P V421R TL)	1	1				VEE RUBBER
24	93900–00817	VALVE, RIM (TR412)	1	1				
25	55S–F5381–00	AXLE, WHEEL	1	1				
26	95607–12200	NUT, SELF-LOCKING	1	1				

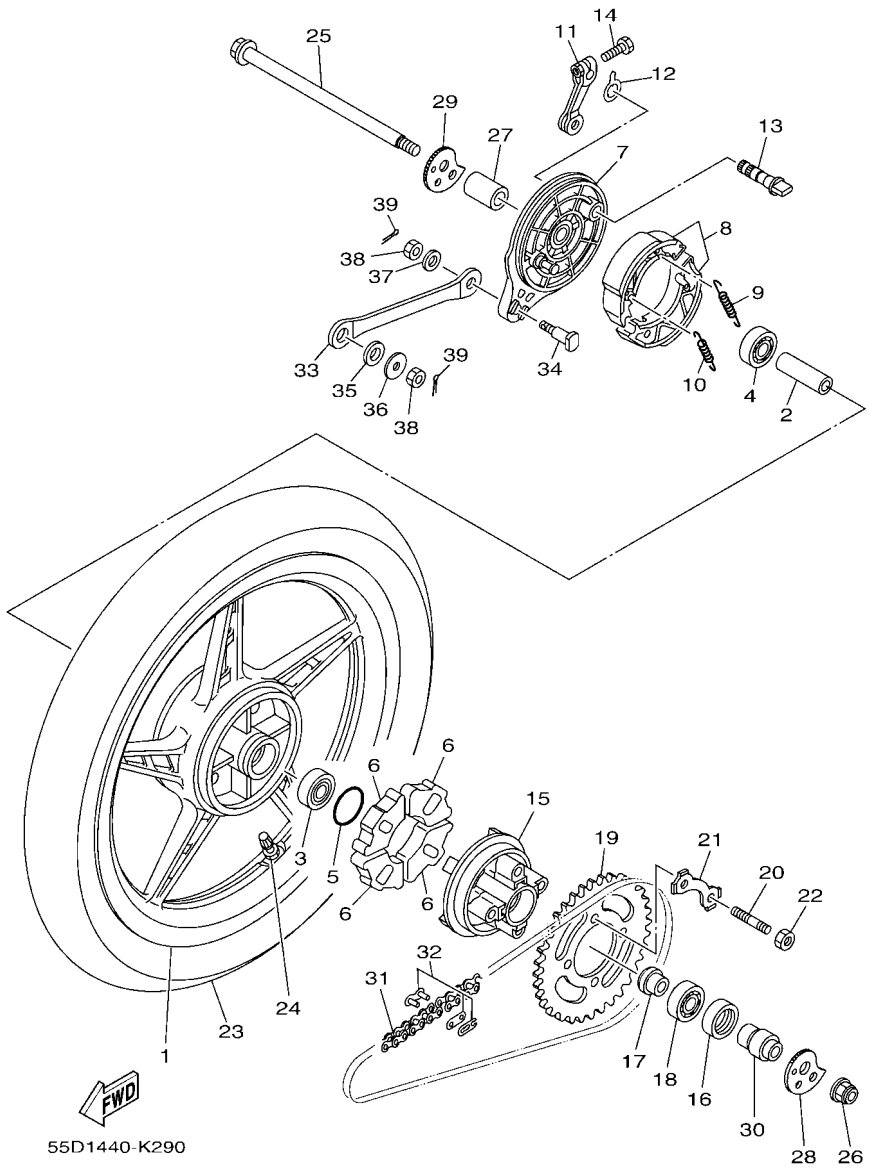

FIG. 30 REAR WHEEL

REF. NO.	PART NO.	DESCRIPTION	55DB	55DC				REMARKS
27	55D–F5383–00	COLLAR, WHEEL	1	1				
28	50C–F5388–00	PULLER, CHAIN 1	1	1				
29	50C–F5389–00	PULLER, CHAIN 2	1	1				
30	55D–F5377–00	COLLAR, WHEEL	1	1				
31	94568–84113	CHAIN (RK-M 428SB X 113L)	1	1				
32	94668–84001	JOINT, CHAIN (RK-M 428M)	1	1				
33	1S8–F5371–01	BAR, TENSION	1	1				
34	90109–08822	BOLT	1	1				
35	90202–15800	WASHER, PLATE	1	1				
36	90201–088N6	WASHER, PLATE	1	1				
37	92907–08200	WASHER	1	1				
38	95304–08700	NUT	2	2				
39	91401–20012	PIN, COTTER	2	2				

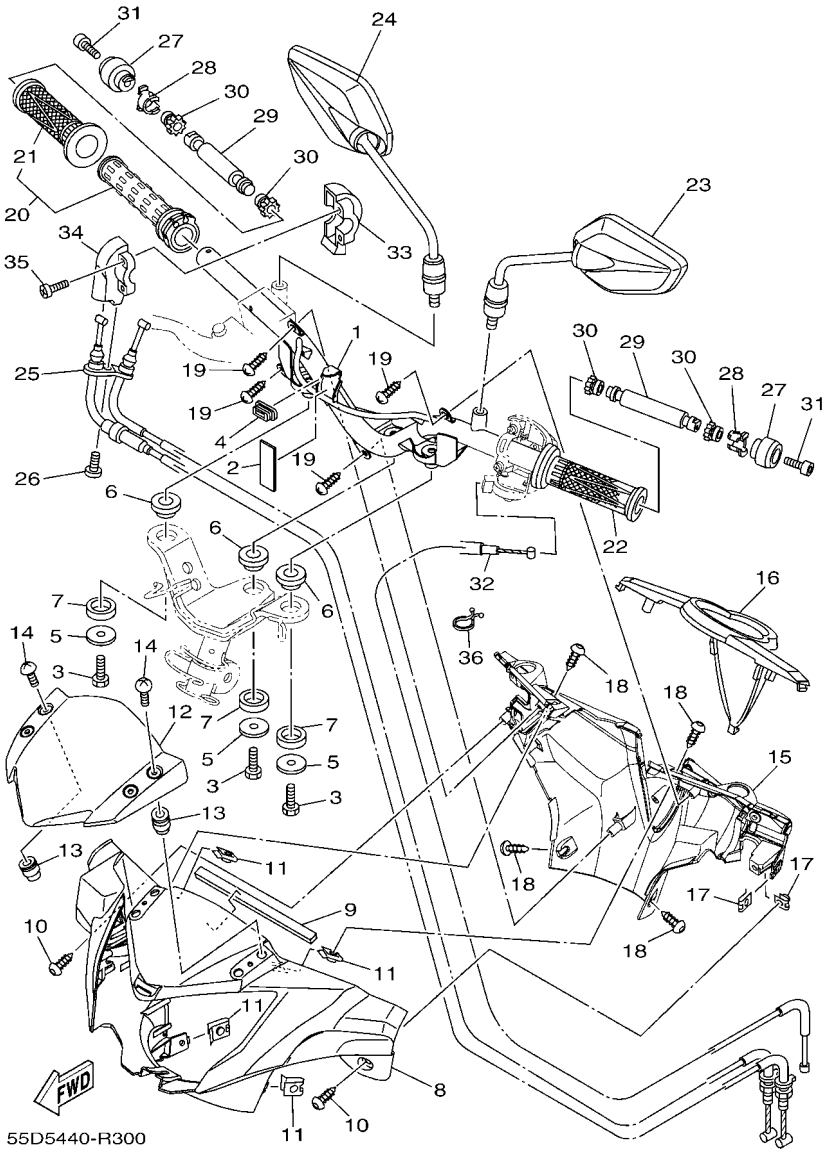

FIG. 31 STEERING HANDLE & CABLE

REF. NO.	PART NO.	DESCRIPTION	55DB	55DC				REMARKS
1	55D–F6210–00	HANDLE	1	1				
2	90520–02813	DAMPER, PLATE	1	1				
3	97007–08016	BOLT	3	3				
4	55C–F6326–00	GROMMET	1	1				
5	90201–08612	WASHER, PLATE	3	3				
6	1S8–F8217–00	DAMPER 1	3	3				
7	1S8–F8227–00	DAMPER 2	3	3				
8	55D–F6143–11–P0	COVER, HANDLE UPPER 1	1					UR FOR RM7
	55D–F6143–11–P2	COVER, HANDLE UPPER 1	1					UR FOR VPBC5
	55D–F6143–11–P6	COVER, HANDLE UPPER 1	1					UR FOR CM6
	55D–F6143–11–P7	COVER, HANDLE UPPER 1		1				MNM3
9	90520–04813	DAMPER, PLATE	1	1				
10	97707–50014	SCREW, TRUSS HEAD TAPPING	2	2				
11	90183–05807	NUT, SPRING	4	4				
12	55D–F8381–00	WINDSHIELD	1	1				
13	90179–05802	NUT	4	4				
14	90150–05806	SCREW, ROUND HEAD	4	4				
15	55C–F6145–00	COVER, HANDLE UPPER 2	1	1				
16	55C–H3559–00–P9	COVER, METER	1					MBL2
	55C–H3559–00–PA	COVER, METER		1				MNM3
17	90183–05807	NUT, SPRING	2	2				
18	97707–50014	SCREW, TRUSS HEAD TAPPING	4	4				
19	97707–50012	SCREW, TRUSS HEAD TAPPING	4	4				
20	55C–F6240–00	GRIP ASSY	1	1				
21	1S8–F6242–00	.GRIP (RIGHT)	1	1				
22	1S8–F6241–00	GRIP	1	1				
23	2WB–F6280–00	REAR VIEW MIRROR ASSY (LEFT)	1	1				

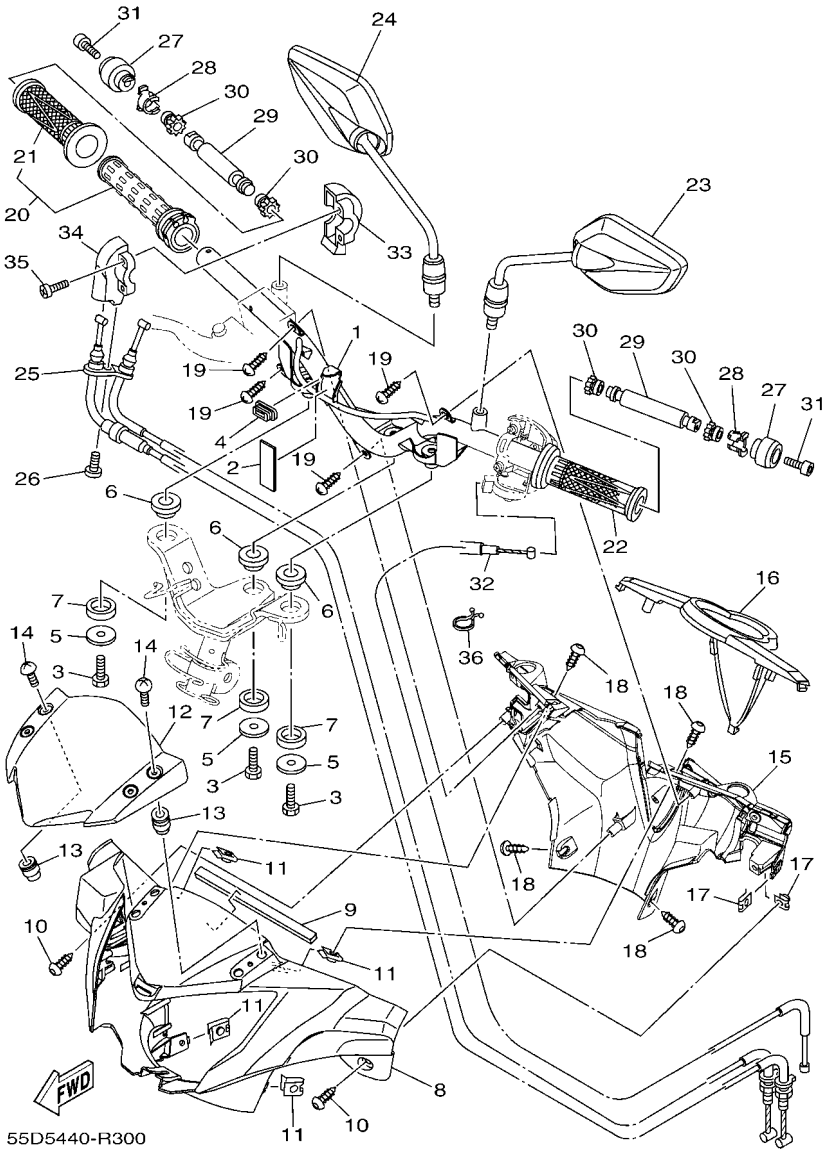

FIG. 31 STEERING HANDLE & CABLE

REF. NO.	PART NO.	DESCRIPTION	55DB	55DC				REMARKS
24	2WB–F6290–00	REAR VIEW MIRROR ASSY (RIGHT)	1	1				
25	55C–F6301–10	THROTTLE CABLE ASSY	1	1				
26	98507–05016	SCREW, PAN HEAD	1	1				
27	55C–F6246–00	END, GRIP	2	2				
28	16S–F6257–00	STOPPER	2	2				
29	55C–F622H–00	WEIGHT	2	2				
30	1S8–F622F–00	DAMPER, LOCATING 1	4	4				
31	91317–06030	BOLT,HEX.SOCKET HEAD	2	2				
32	55C–F6331–10	CABLE, STARTER 1	1	1				
33	55D–F6281–00	CAP, GRIP UPPER	1	1				
34	55D–F6282–00	CAP, GRIP UNDER	1	1				
35	98507–05025	SCREW, PAN HEAD	2	2				
36	90464–24803	CLAMP	1	1				

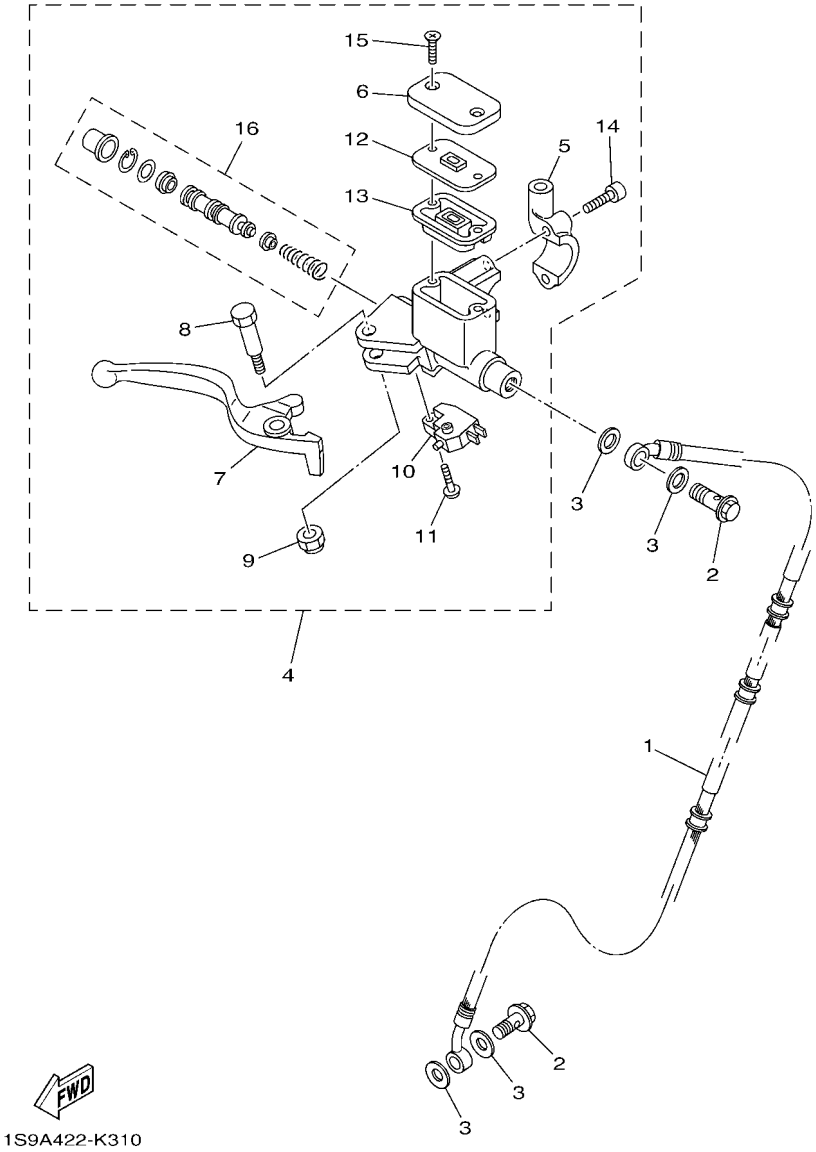

FIG. 32 FRONT MASTER CYLINDER

REF. NO.	PART NO.	DESCRIPTION	55DB	55DC				REMARKS
1	50C–F5872–00	HOSE, BRAKE 1	1	1				
2	90401–10812	BOLT, UNION	2	2				
3	90201–10118	WASHER, PLATE	4	4				
4	1S9–F583T–03	MASTER CYLINDER ASSY	1	1				
5	1S9–F5867–01	.BRACKET, MASTER CYLINDER	1	1				
6	5HV–F5852–00	.CAP, RESERVOIR	1	1				
7	1S9–H3922–01	.LEVER 2	1	1				
8	90109–06577	.BOLT	1	1				
9	9560M–06100	.NUT, U	1	1				
10	18D–H3980–00	.FRONT STOP SWITCH ASSY	1	1				
11	9760L–04212	.SCREW, PAN HEAD	1	1				
12	1S9–F585B–00	.PLATE, DIAPHRAGM	1	1				
13	5HV–F5854–10	.DIAPHRAGM, RESERVOIR	1	1				
14	1S9–F6332–00	.BOLT	2	2				
15	9870M–04012	.SCREW, FLAT HEAD	2	2				
16	1S9–W0041–00	.CYLINDER KIT, MASTER	1	1				

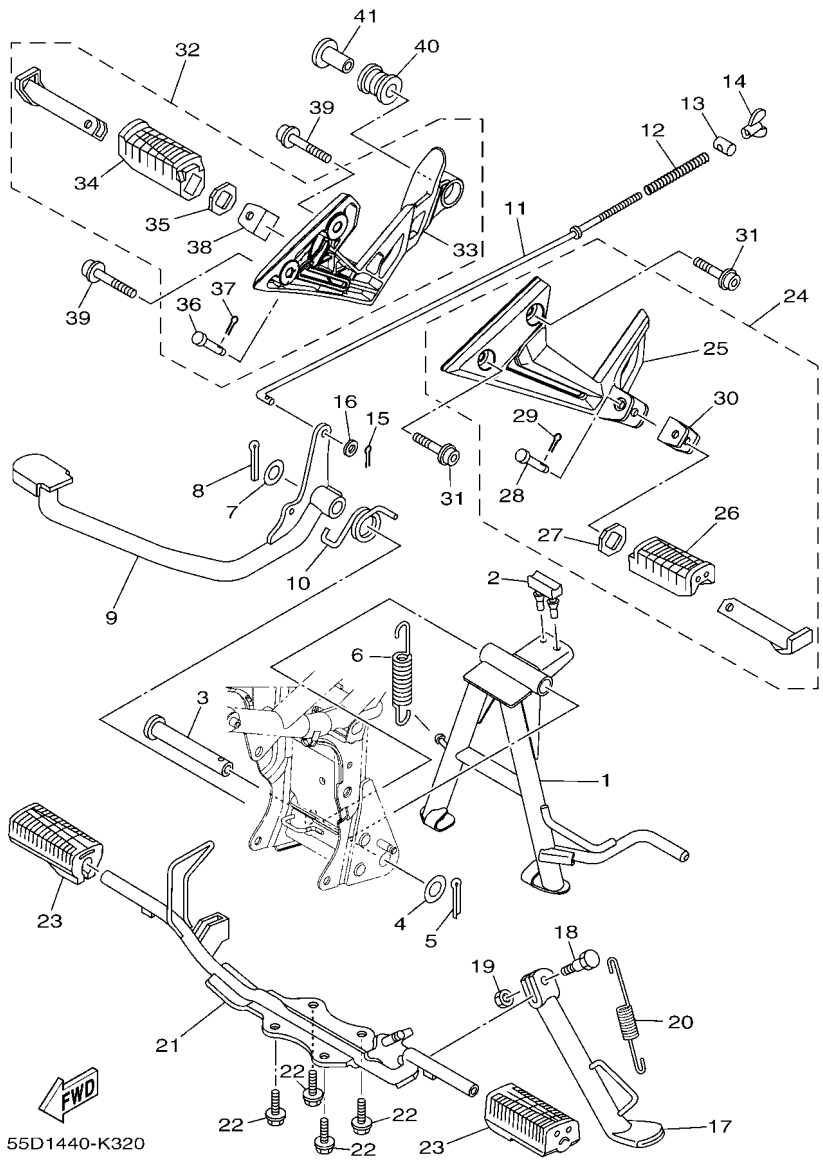

FIG. 33 STAND & FOOTREST

REF. NO.	PART NO.	DESCRIPTION	55DB	55DC				REMARKS
1	55D–F7111–00	STAND, MAIN	1	1				
2	1S8–F7114–00	STOPPER, MAIN STAND	1	1				
3	5YP–F7112–00	SHAFT, MAIN STAND	1	1				
4	90201–163H8	WASHER, PLATE	1	1				
5	91401–30030	PIN, COTTER	1	1				
6	90506–35806	SPRING, TENSION	1	1				
7	90201–158D1	WASHER, PLATE	1	1				
8	91401–30030	PIN, COTTER	1	1				
9	55D–F7211–00	PEDAL, BRAKE	1	1				
10	90508–40801	SPRING, TORSION	1	1				
11	55S–F7231–00	ROD, BRAKE	1	1				
12	90501–10245	SPRING, COMPRESSION	1	1				
13	90249–12008	PIN	1	1				
14	90175–06013	NUT, WING	1	1				
15	91401–20012	PIN, COTTER	1	1				
16	92907–06600	WASHER, PLATE	1	1				
17	1S8–F7311–00	STAND, SIDE	1	1				
18	90109–08034	BOLT	1	1				
19	95307–08700	NUT	1	1				
20	90506–23804	SPRING, TENSION	1	1				
21	1S8–F7411–00	FOOTREST 1	1	1				
22	95827–08016	BOLT, FLANGE	4	4				
23	5LL–F7413–00	COVER, FOOTREST	2	2				
24	55C–F7430–00–P1	REAR FOOTREST ASSY 1	1	1				SMX
25	55C–F7452–00–P1	.BRACKET, FOOTREST 1	1	1				SMX
26	5BU–F7433–00	.COVER, REAR FOOTREST	1	1				
27	5BU–F7445–00	.PLATE 1	1	1				

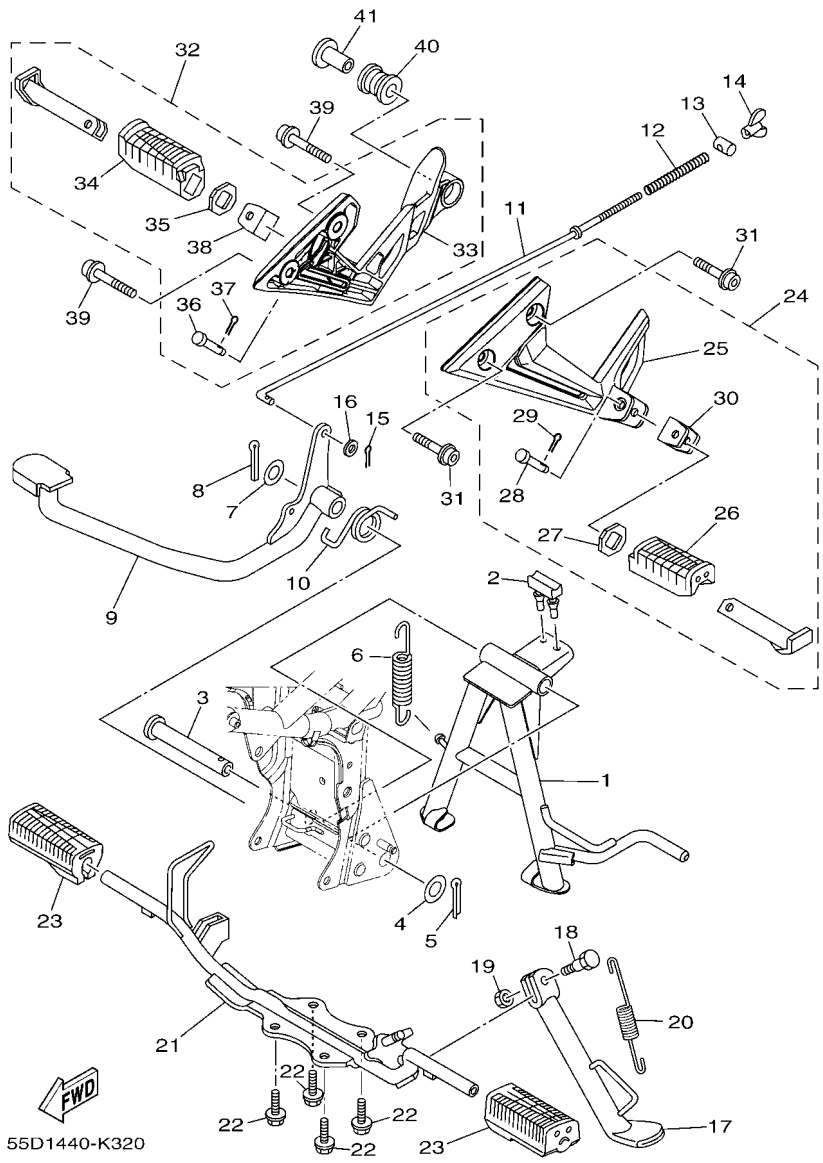

FIG. 33 STAND & FOOTREST

REF. NO.	PART NO.	DESCRIPTION	55DB	55DC				REMARKS
28	91702–08042	.PIN, CLEVIS	1	1				
29	90252–23800	.PIN, COTTER	1	1				
30	5TF–F7314–00	.STOPPER	1	1				
31	90110–08199	BOLT, HEXAGON SOCKET HEAD	2	2				
32	55C–F7440–00–P1	REAR FOOTREST ASSY 2	1	1				SMX
33	55C–F7462–00–P1	.BRACKET, FOOTREST 2	1	1				SMX
34	5BU–F7444–00	.COVER, REAR FOOTREST	1	1				
35	5BU–F7445–00	.PLATE 1	1	1				
36	91702–08042	.PIN, CLEVIS	1	1				
37	90252–23800	.PIN, COTTER	1	1				
38	5TF–F7314–00	.STOPPER	1	1				
39	90110–08199	BOLT, HEXAGON SOCKET HEAD	2	2				
40	5TF–F7424–00	DAMPER, FOOTREST 2	1	1				
41	90387–10805	COLLAR	1	1				

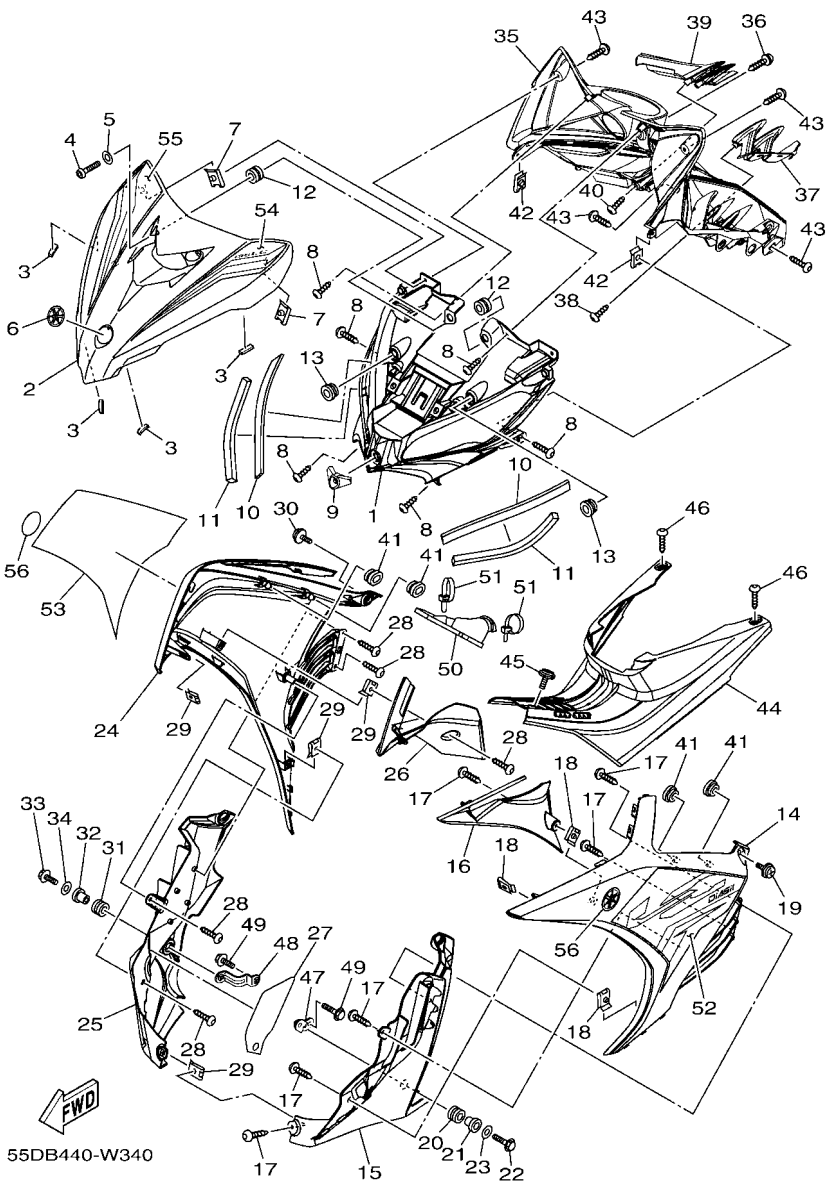

FIG. 34 LEG SHIELD

REF. NO.	PART NO.	DESCRIPTION	55DB	55DC				REMARKS
1	55D–F3391–00	PANEL, FRONT	1					
2	55D–F8345–10–P1	MOLE 1	1					SMX FOR RM7,CM6
	55D–F8345–10–P2	MOLE 1	1					FOR VPBC5
3	55C–F844E–00	SEAL 3	4					
4	92017–06012	BOLT, BUTTON HEAD	2					
	92017–06040	BOLT, BUTTON HEAD	2					
5	90201–06822	WASHER, PLATE	2					
6	5VW–F313B–00	EMBLEM, 1	1					
7	90183–05807	NUT, SPRING	2					
8	97707–50014	SCREW, TRUSS HEAD TAPPING	6					
9	55D–F8187–00	GROMMET	1					
10	90520–05806	DAMPER, PLATE	2					
11	90520–10810	DAMPER, PLATE	2					
12	90480–13807	GROMMET	2					
13	90480–13867	GROMMET	2					
14	55C–F8311–00–P0	LEG SHIELD 1	1					UR SMX FOR RM7
	55C–F8311–00–P7	LEG SHIELD 1	1					UR MS1 FOR VPBC5
	55C–F8311–00–PA	LEG SHIELD 1	1					UR MBL2 FOR CM6
15	55C–F835J–00	BODY, FRONT UNDER 1	1					
16	55C–F137U–00	GUIDE, AIR 1	1					
17	97707–50014	SCREW, TRUSS HEAD TAPPING	6					
18	90183–05807	NUT, SPRING	3					
19	90159–06181	SCREW, WITH WASHER	1					
20	90480–18418	GROMMET	1					
21	90387–09801	COLLAR	1					
22	95807–06020	BOLT, FLANGE	1					
23	90201–06557	WASHER, PLATE	1					

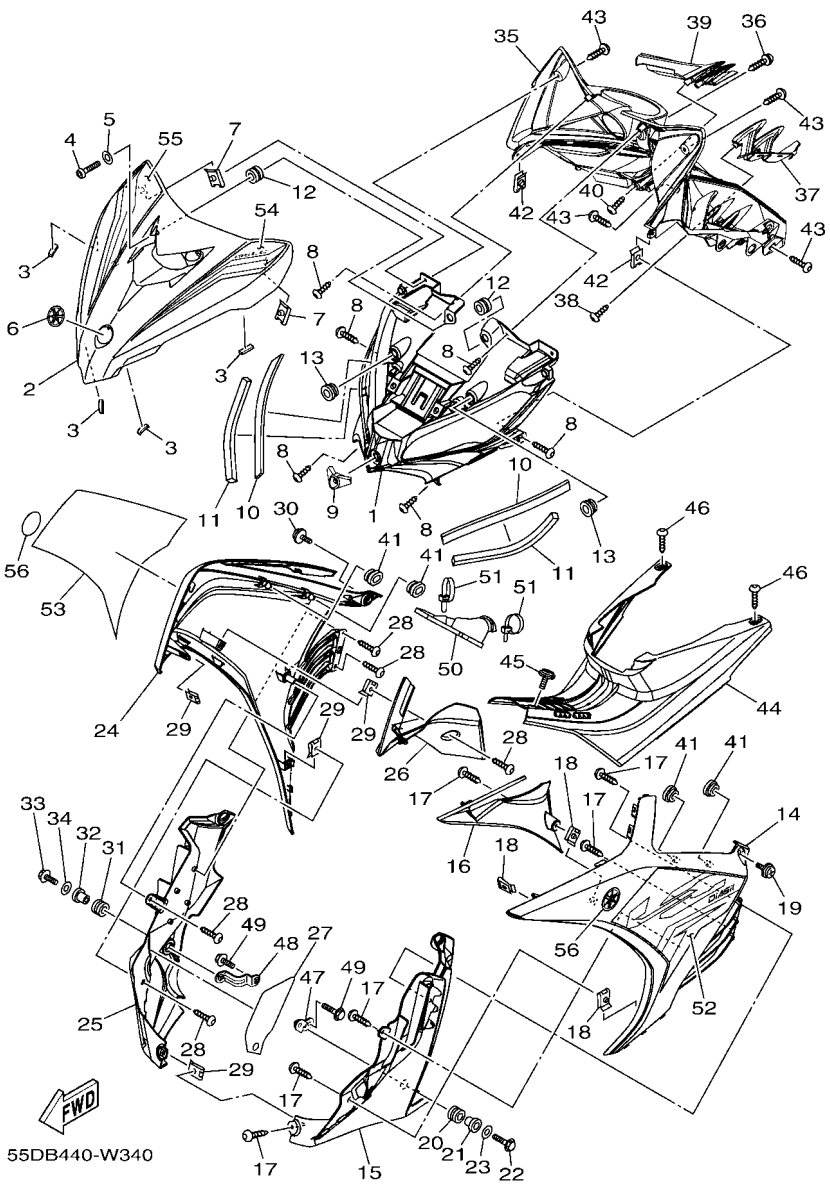

FIG. 34 LEG SHIELD

REF. NO.	PART NO.	DESCRIPTION	55DB	55DC				REMARKS
24	55C–F8312–00–P0	LEG SHIELD 2	1					UR SMX FOR RM7
	55C–F8312–00–P7	LEG SHIELD 2	1					UR MS1 FOR VPBC5
	55C–F8312–00–PA	LEG SHIELD 2	1					UR MBL2 FOR CM6
25	55C–F835K–00	BODY, FRONT UNDER 2	1					
26	55C–F137V–00	GUIDE, AIR 2	1					
27	50C–F8307–00	SEAL	1					
28	97707–50014	SCREW, TRUSS HEAD TAPPING	5					
29	90183–05807	NUT, SPRING	4					
30	90159–06181	SCREW, WITH WASHER	1					
31	90480–18418	GROMMET	1					
32	90387–09801	COLLAR	1					
33	95807–06020	BOLT, FLANGE	1					
34	90201–06557	WASHER, PLATE	1					
35	55C–F836K–00	PANEL, INNER 1	1					
36	90159–06181	SCREW, WITH WASHER	1					
37	55C–F8273–00	FIN 1	1					
38	97707–50012	SCREW, TRUSS HEAD TAPPING	2					
39	55C–F8274–00	FIN 2	1					
40	97707–50012	SCREW, TRUSS HEAD TAPPING	2					
41	90480–01813	GROMMET	4					
42	90183–05807	NUT, SPRING	2					
43	97707–50014	SCREW, TRUSS HEAD TAPPING	4					
44	55C–F842N–00	COVER 2	1					
45	90159–06181	SCREW, WITH WASHER	1					
46	97707–50014	SCREW, TRUSS HEAD TAPPING	2					
47	55D–F8321–00	STAY 1	1					
48	55D–F8322–00	STAY 2	1					

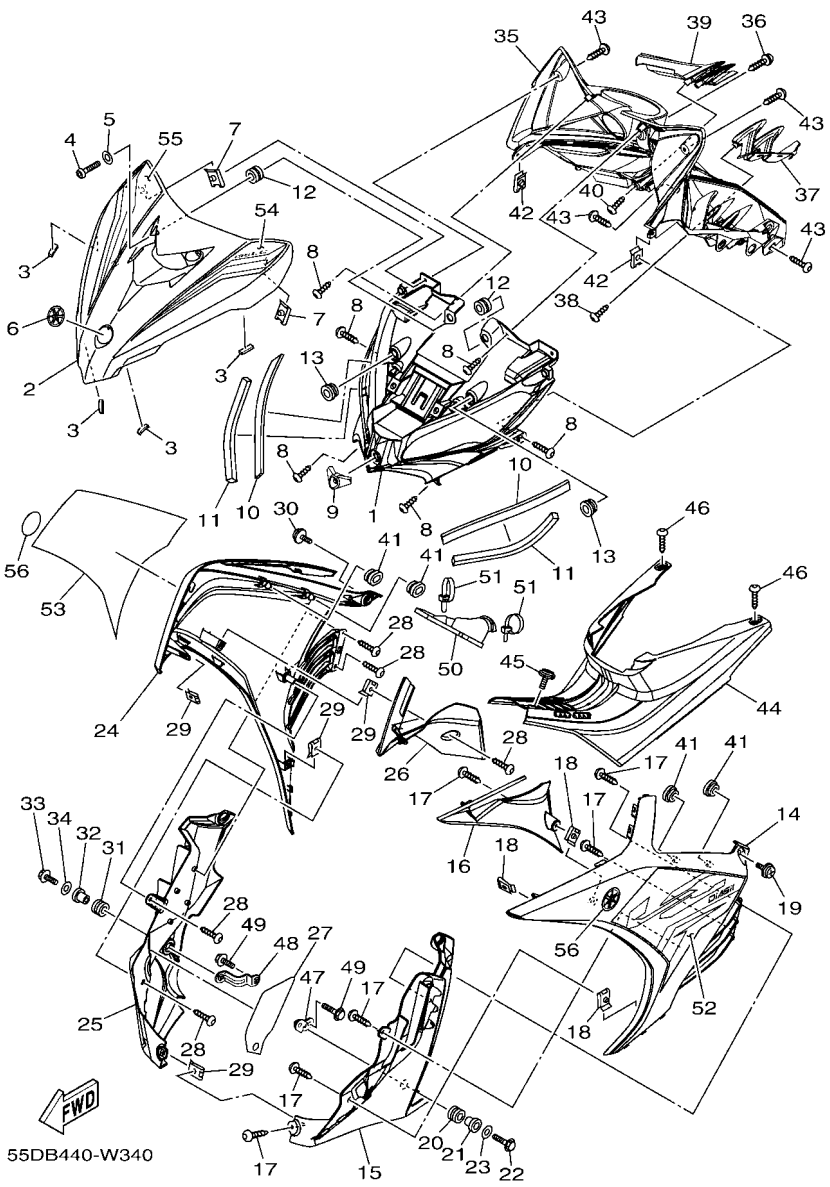

FIG. 34 LEG SHIELD

REF. NO.	PART NO.	DESCRIPTION	55DB	55DC				REMARKS
49	95807–06020	BOLT, FLANGE	2					
50	1S8–F8336–00	PLATE	1					
51	90464–50801	CLAMP	2					
52	55D–F8391–M0	GRAPHIC 1	1					UR FOR RM7
	55D–F8391–N0	GRAPHIC 1	1					UR FOR VPBC5
	55D–F8391–P0	GRAPHIC 1	1					UR FOR CM6
53	55D–F8392–M0	GRAPHIC 2	1					UR FOR RM7
	55D–F8392–N0	GRAPHIC 2	1					UR FOR VPBC5
	55D–F8392–P0	GRAPHIC 2	1					UR FOR CM6
54	55D–F8398–60	GRAPHIC 5	1					UR FOR RM7
	55D–F8398–70	GRAPHIC 5	1					UR FOR VPBC5
	55D–F8398–80	GRAPHIC 5	1					UR FOR CM6
55	55D–F8399–60	GRAPHIC 6	1					UR FOR RM7
	55D–F8399–70	GRAPHIC 6	1					UR FOR VPBC5
	55D–F8399–80	GRAPHIC 6	1					UR FOR CM6
56	29B–F411B–00	EMBLEM	2					

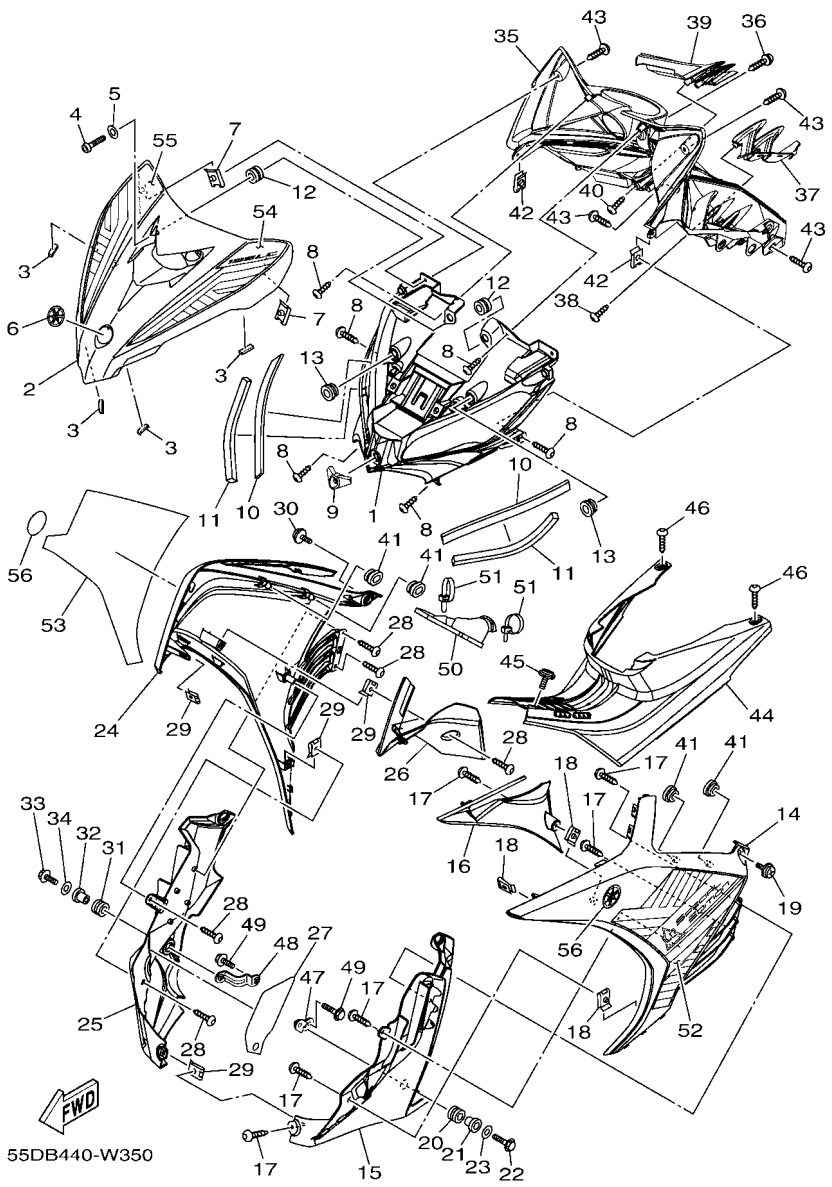

FIG. 35 LEG SHIELD 2

REF. NO.	PART NO.	DESCRIPTION	55DB	55DC				REMARKS
1	55D–F3391–00	PANEL, FRONT		1				
2	55D–F8345–10–P1	MOLE 1		1				SMX FOR MNM3
3	55C–F844E–00	SEAL 3		4				
4	92017–06012	BOLT, BUTTON HEAD		2				
	92017–06040	BOLT, BUTTON HEAD		2				
5	90201–06822	WASHER, PLATE		2				
6	5VW–F313B–00	EMBLEM, 1		1				
7	90183–05807	NUT, SPRING		2				
8	97707–50014	SCREW, TRUSS HEAD TAPPING		6				
9	55D–F8187–00	GROMMET		1				
10	90520–05806	DAMPER, PLATE		2				
11	90520–10810	DAMPER, PLATE		2				
12	90480–13807	GROMMET		2				
13	90480–13867	GROMMET		2				
14	55C–F8311–00–PB	LEG SHIELD 1		1				MNM3
15	55C–F835J–00	BODY, FRONT UNDER 1		1				
16	55C–F137U–00	GUIDE, AIR 1		1				
17	97707–50014	SCREW, TRUSS HEAD TAPPING		6				
18	90183–05807	NUT, SPRING		3				
19	90159–06181	SCREW, WITH WASHER		1				
20	90480–18418	GROMMET		1				
21	90387–09801	COLLAR		1				
22	95807–06020	BOLT, FLANGE		1				
23	90201–06557	WASHER, PLATE		1				
24	55C–F8312–00–PB	LEG SHIELD 2		1				MNM3
25	55C–F835K–00	BODY, FRONT UNDER 2		1				
26	55C–F137V–00	GUIDE, AIR 2		1				

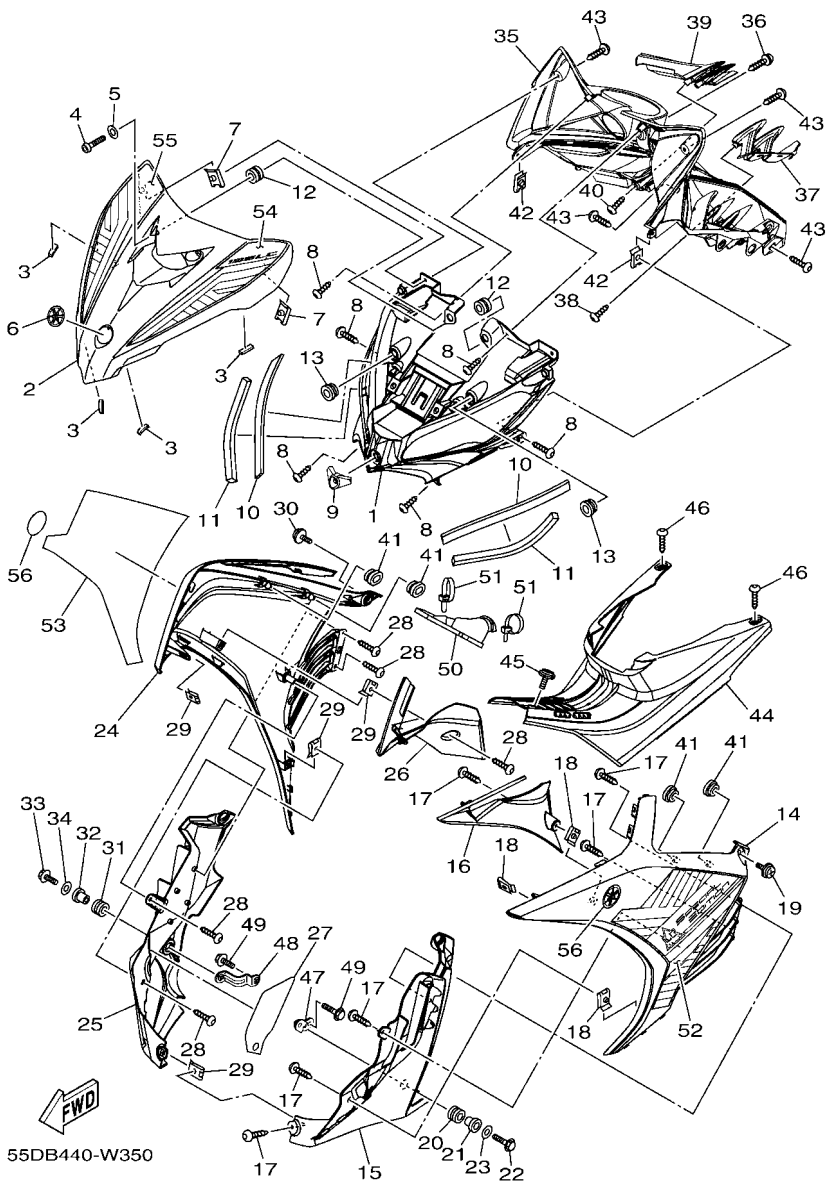

FIG. 35 LEG SHIELD 2

REF. NO.	PART NO.	DESCRIPTION	55DB	55DC				REMARKS
27	50C–F8307–00	SEAL		1				
28	97707–50014	SCREW, TRUSS HEAD TAPPING		5				
29	90183–05807	NUT, SPRING		4				
30	90159–06181	SCREW, WITH WASHER		1				
31	90480–18418	GROMMET		1				
32	90387–09801	COLLAR		1				
33	95807–06020	BOLT, FLANGE		1				
34	90201–06557	WASHER, PLATE		1				
35	55C–F836K–00	PANEL, INNER 1		1				
36	90159–06181	SCREW, WITH WASHER		1				
37	55C–F8273–00	FIN 1		1				
38	97707–50012	SCREW, TRUSS HEAD TAPPING		2				
39	55C–F8274–00	FIN 2		1				
40	97707–50012	SCREW, TRUSS HEAD TAPPING		2				
41	90480–01813	GROMMET		4				
42	90183–05807	NUT, SPRING		2				
43	97707–50014	SCREW, TRUSS HEAD TAPPING		4				
44	55C–F842N–00	COVER 2		1				
45	90159–06181	SCREW, WITH WASHER		1				
46	97707–50014	SCREW, TRUSS HEAD TAPPING		2				
47	55D–F8321–00	STAY 1		1				
48	55D–F8322–00	STAY 2		1				
49	95807–06020	BOLT, FLANGE		2				
50	1S8–F8336–00	PLATE		1				
51	90464–50801	CLAMP		2				
52	55D–F8391–R0	GRAPHIC 1		1				
53	55D–F8392–R0	GRAPHIC 2		1				

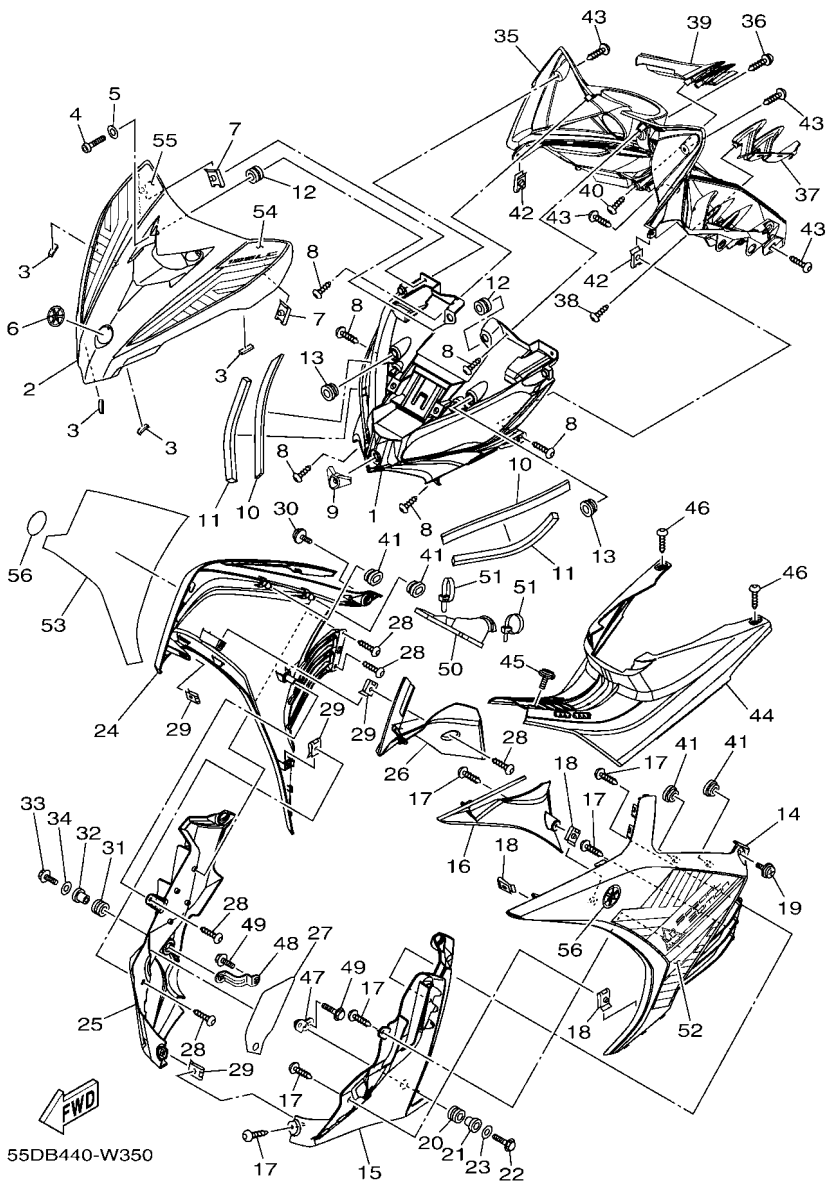

FIG. 35 LEG SHIELD 2

REF. NO.	PART NO.	DESCRIPTION	55DB	55DC				REMARKS
54	55D–F8398–90	GRAPHIC 5		1				
55	55D–F8399–90	GRAPHIC 6		1				
56	29B–F411B–00	EMBLEM		2				

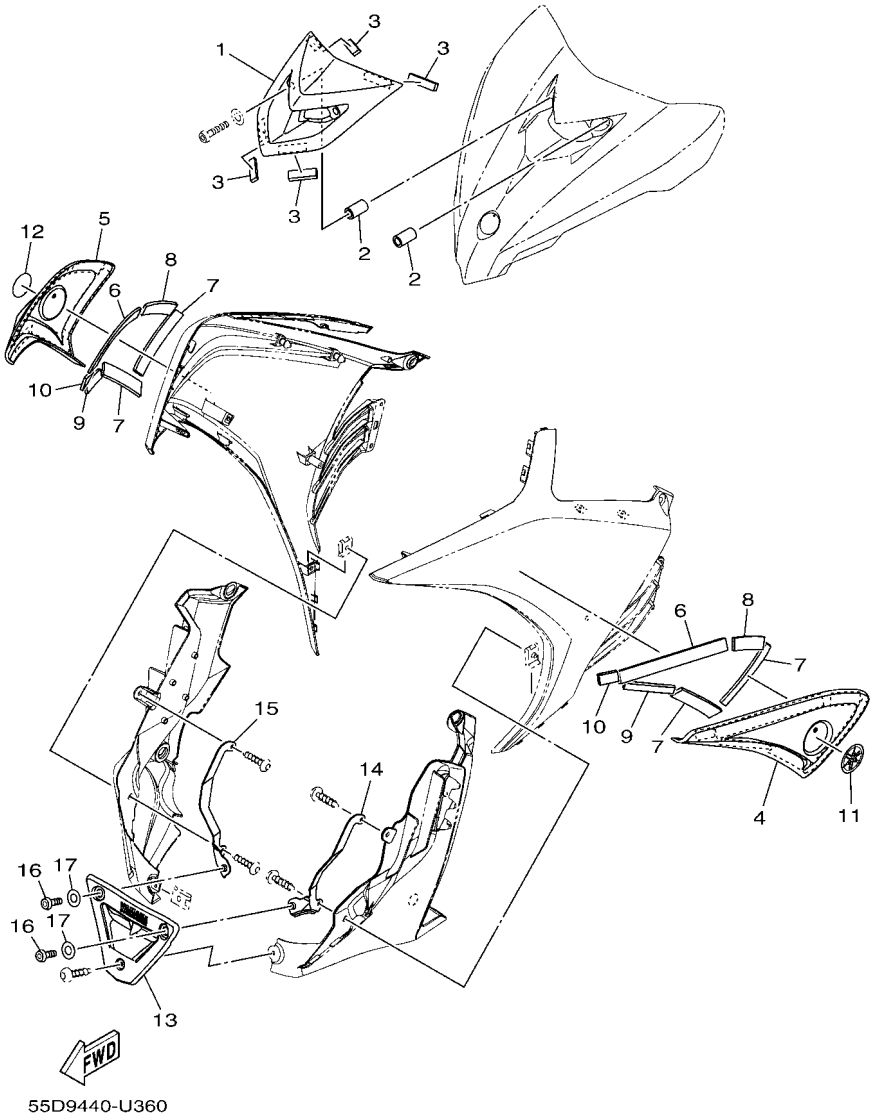

FIG. 36 LEG SHIELD 3

REF. NO.	PART NO.	DESCRIPTION	55DB	55DC				REMARKS
1	55D–F317L–00–P1	COVER, HORN	1					AP FOR RM7
	55D–F317L–00–P0	COVER, HORN	1					AP MBL2 FOR VPBC5
	55D–F317L–00–P2	COVER, HORN	1					AP FOR CM6
	55D–F317L–00–P3	COVER, HORN		1				AP MDOM2 FOR MNM3
2	55D–F8373–00	COLLAR	2	2				AP
3	90520–02819	DAMPER, PLATE	4	4				AP
4	55D–F137W–00–P0	SCOOP, AIR 1	1					AP FOR RM7
	55D–F137W–00–P4	SCOOP, AIR 1	1					AP MS1 FOR VPBC5
	55D–F137W–00–P5	SCOOP, AIR 1	1					AP FOR CM6
	55D–F137W–00–P6	SCOOP, AIR 1		1				AP MNM3
5	55D–F137X–00–P0	SCOOP, AIR 2	1					AP FOR RM7
	55D–F137X–00–P4	SCOOP, AIR 2	1					AP MS1 FOR VPBC5
	55D–F137X–00–P5	SCOOP, AIR 2	1					AP FOR CM6
	55D–F137X–00–P6	SCOOP, AIR 2		1				AP MNM3
6	55D–F173T–00	TAPE 1	2	2				AP
7	55D–F173U–00	TAPE 2	4	4				AP
8	55D–F8344–00	TAPE	2	2				AP
9	55D–F1566–00	TAPE, 1	2	2				AP
10	55D–F1567–00	TAPE, 2	2	2				AP
11	B17–F836B–20	TUNING FORK MARK	1	1				AP
12	B17–F837B–20	TUNING FORK MARK	1	1				AP
13	55D–F8385–00	COVER, UNDER	1	1				AP
14	55D–F831T–00	STAY, SUPPORT 1	1	1				AP
15	55D–F832T–00	STAY, SUPPORT 2	1	1				AP
16	92017–06012	BOLT, BUTTON HEAD	2	2				AP
17	90201–06822	WASHER, PLATE	2	2				AP

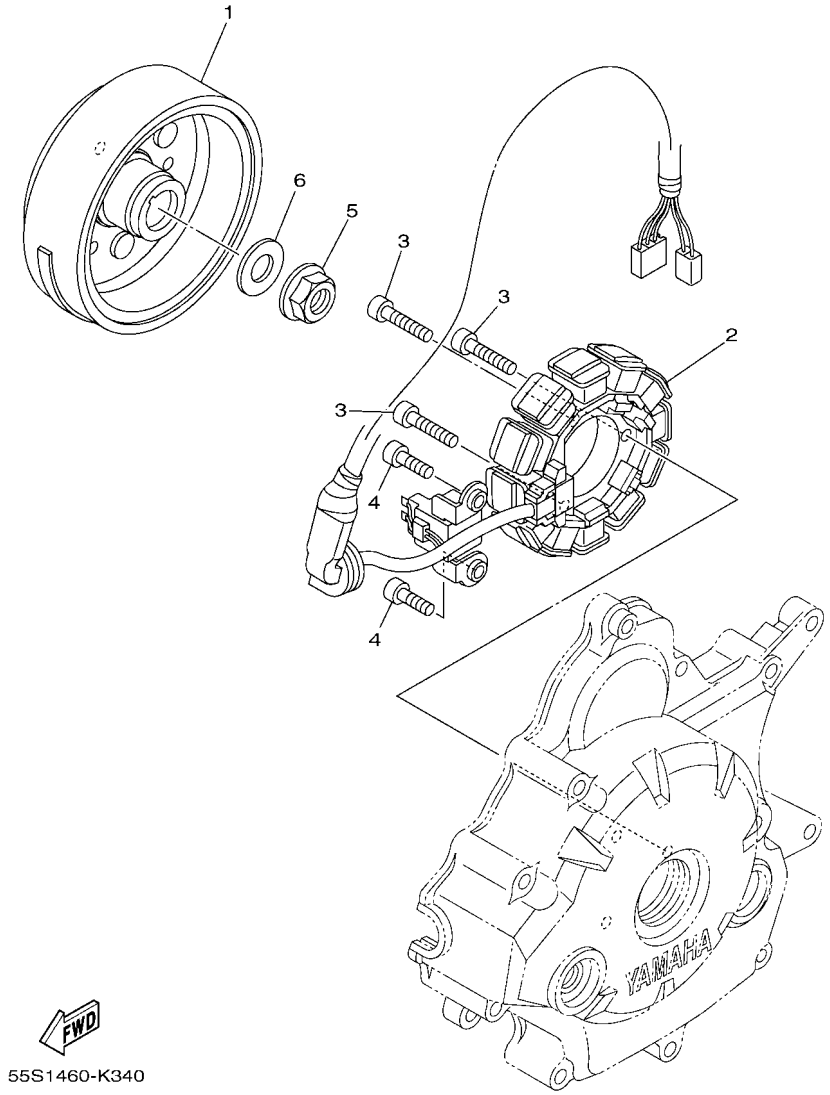

FIG. 37 GENERATOR

REF. NO.	PART NO.	DESCRIPTION	55DB	55DC				REMARKS
1	55S–H1450–00	ROTOR ASSY	1	1				
2	1S7–H1410–01	STATOR ASSY	1	1				
3	91317–06025	BOLT,HEX.SOCKET HEAD	3	3				
4	91317–06016	BOLT,HEX.SOCKET HEAD	2	2				
5	95707–12500	NUT, FLANGE	1	1				
6	90201–122H1	WASHER, PLATE	1	1				

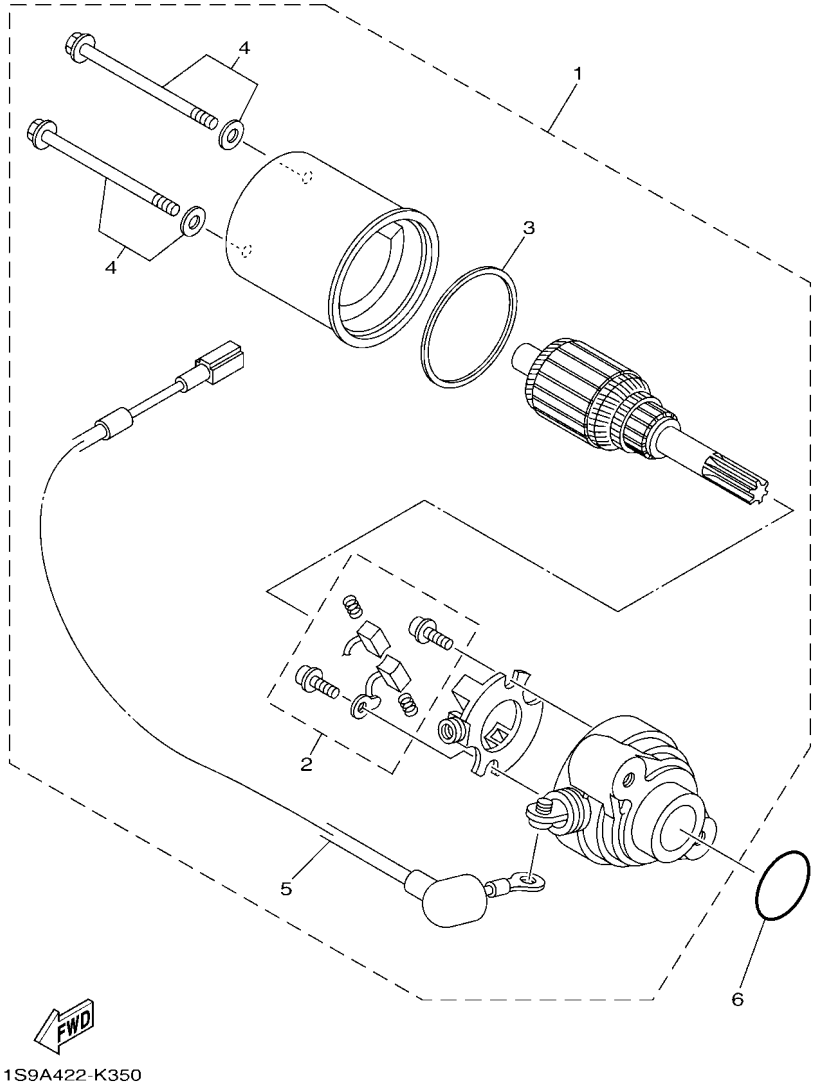

FIG. 38 STARTING MOTOR

REF. NO.	PART NO.	DESCRIPTION	55DB	55DC				REMARKS
1	1S7–H1800–02	STARTING MOTOR ASSY	1	1				
2	3AY–H1801–00	.BRUSH SET	1	1				
3	1S7–H1861–00	.GASKET	1	1				
4	3AY–H1828–00	.SCREW 2	2	2				
5	5YP–H183G–00	.CORD COMP.	1	1				
6	93210–26801	O-RING	1	1				

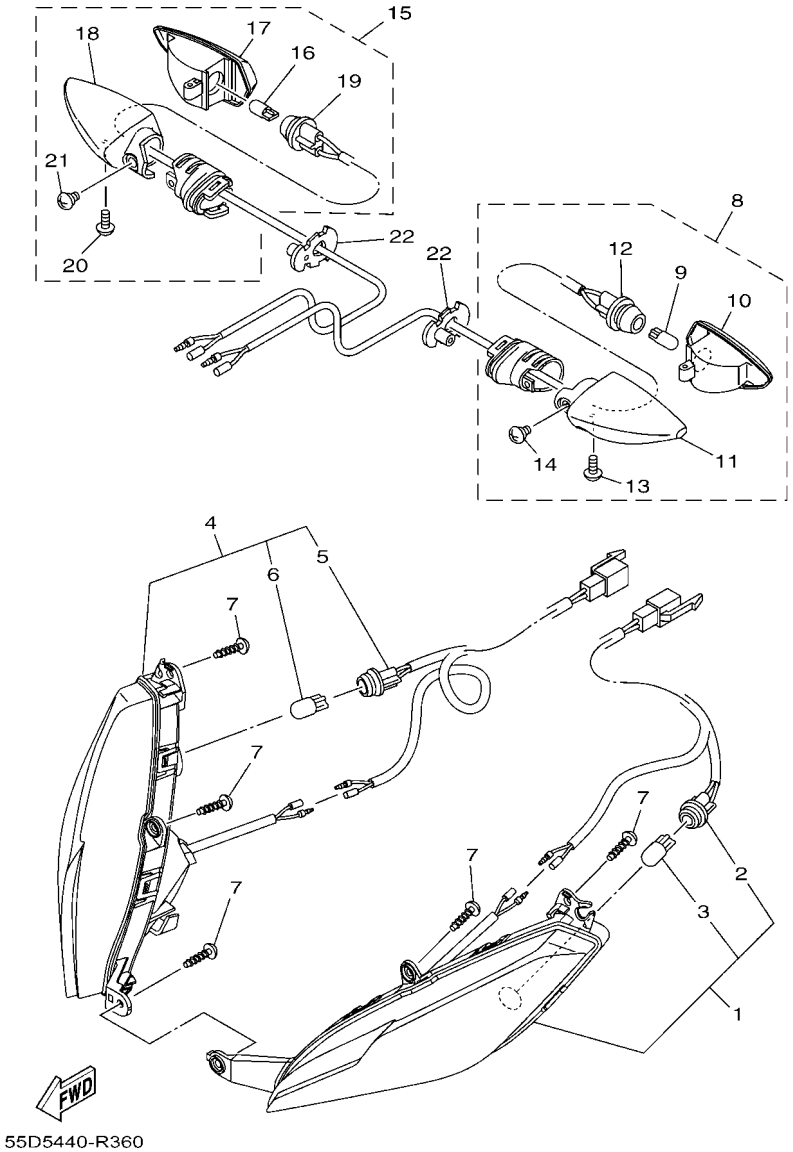

FIG. 39 FLASHER LIGHT

REF. NO.	PART NO.	DESCRIPTION	55DB	55DC				REMARKS
1	55D–H3310–20	FRONT FLASHER LIGHT ASSY 1	1	1				
2	55D–H3336–20	.CORD	1	1				
3	55D–H3311–00	.BULB, FLASHER (12V-10W)	1	1				
4	55D–H3320–20	FRONT FLASHER LIGHT ASSY 2	1	1				
5	55D–H3346–20	.CORD	1	1				
6	55D–H3311–00	.BULB, FLASHER (12V-10W)	1	1				
7	97707–50016	SCREW, TRUSS HEAD TAPPING	5	5				
8	55D–H3330–01	REAR FLASHER LIGHT ASSY 1	1	1				
9	55D–H3311–00	.BULB, FLASHER (12V-10W)	1	1				
10	55D–H333A–00	.LENS COMP 1	1	1				
11	55D–H3323–00	.BODY	1	1				
12	55D–H333E–01	.CORD ASSY	1	1				
13	55D–H3333–00	.SCREW, LENS FITTING	1	1				
14	55D–H3358–00	.SCREW, SPECIAL	1	1				
15	55D–H3340–01	REAR FLASHER LIGHT ASSY 2	1	1				
16	55D–H3311–00	.BULB, FLASHER (12V-10W)	1	1				
17	55D–H334A–00	.LENS COMP 2	1	1				
18	55D–H332M–00	.BODY 2	1	1				
19	55D–H334E–01	.CORD ASSY	1	1				
20	55D–H3333–00	.SCREW, LENS FITTING	1	1				
21	55D–H3358–00	.SCREW, SPECIAL	1	1				
22	1VP–H3318–00	STAY, FLASHER 1	2	2				

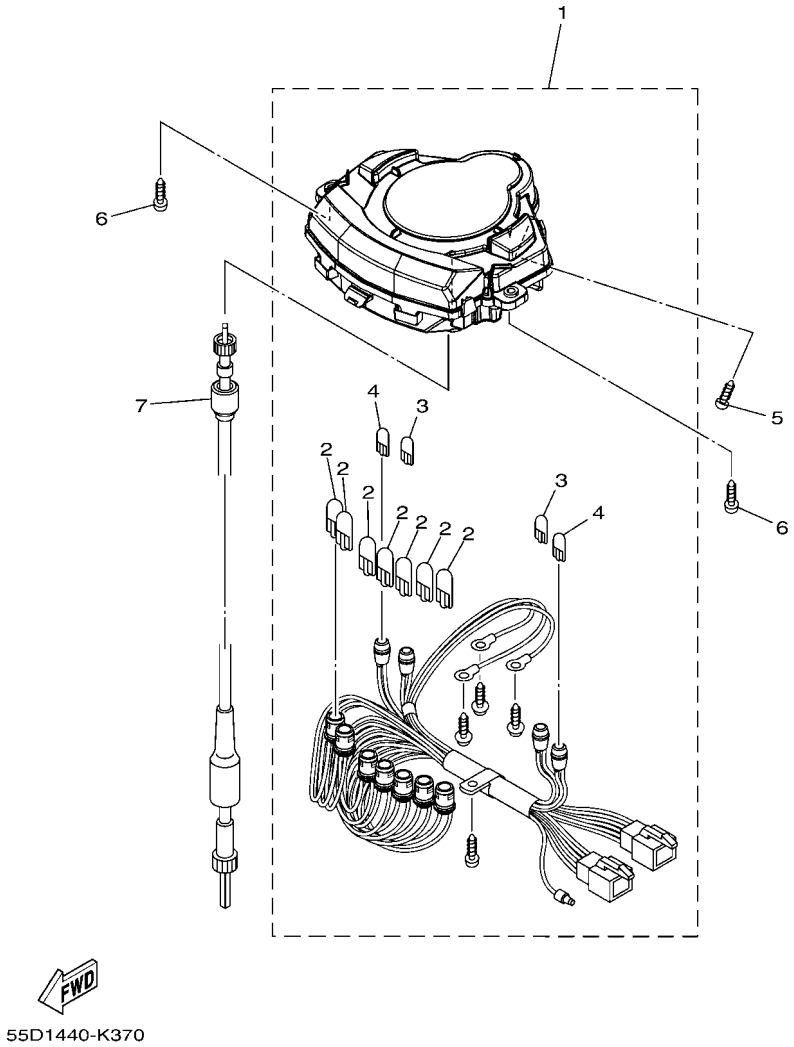

FIG. 40 METER

REF. NO.	PART NO.	DESCRIPTION	55DB	55DC				REMARKS
1	55D–H3510–30	SPEEDOMETER ASSY	1	1				
2	5LW–H3518–00	.BULB, METER (T10 12V-1.7W)	7	7				
3	5BU–H3517–10	.BULB (T6.5 12V-1.7W)	2	2				
4	55D–H3519–00	.BULB, METER (T6.5 14V-3W)	2	2				
5	97707–50016	SCREW, TRUSS HEAD TAPPING	1	1				
6	97707–50025	SCREW, TAPPING	2	2				
7	55C–H3550–10	SPEEDOMETER CABLE ASSY	1	1				

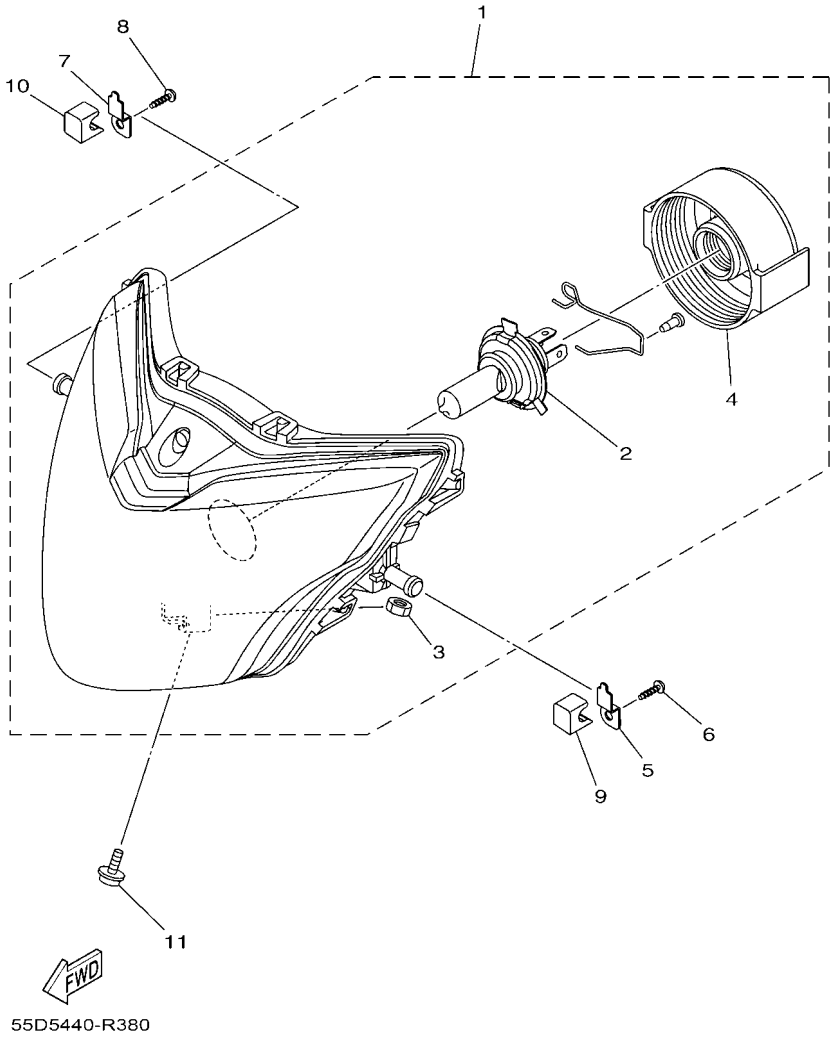

FIG. 41 HEADLIGHT

REF. NO.	PART NO.	DESCRIPTION	55DB	55DC				REMARKS
1	55D–H4310–00	HEADLIGHT UNIT ASSY	1	1				
2	1VP–H4314–00	.BULB, HEADLIGHT (12V 35/35W)	1	1				
3	90173–06015	.NUT, SQUARE	1	1				
4	1VP–H4397–00	.COVER, SOCKET	1	1				
5	55C–H4781–00	BRACKET 1	1	1				
6	97707–50016	SCREW, TRUSS HEAD TAPPING	1	1				
7	55C–H4782–00	BRACKET 2	1	1				
8	97707–50016	SCREW, TRUSS HEAD TAPPING	1	1				
9	55C–H411T–00	HOLDER, 1	1	1				
10	55C–H411U–00	HOLDER, 2	1	1				
11	95807–06010	BOLT, FLANGE	1	1				

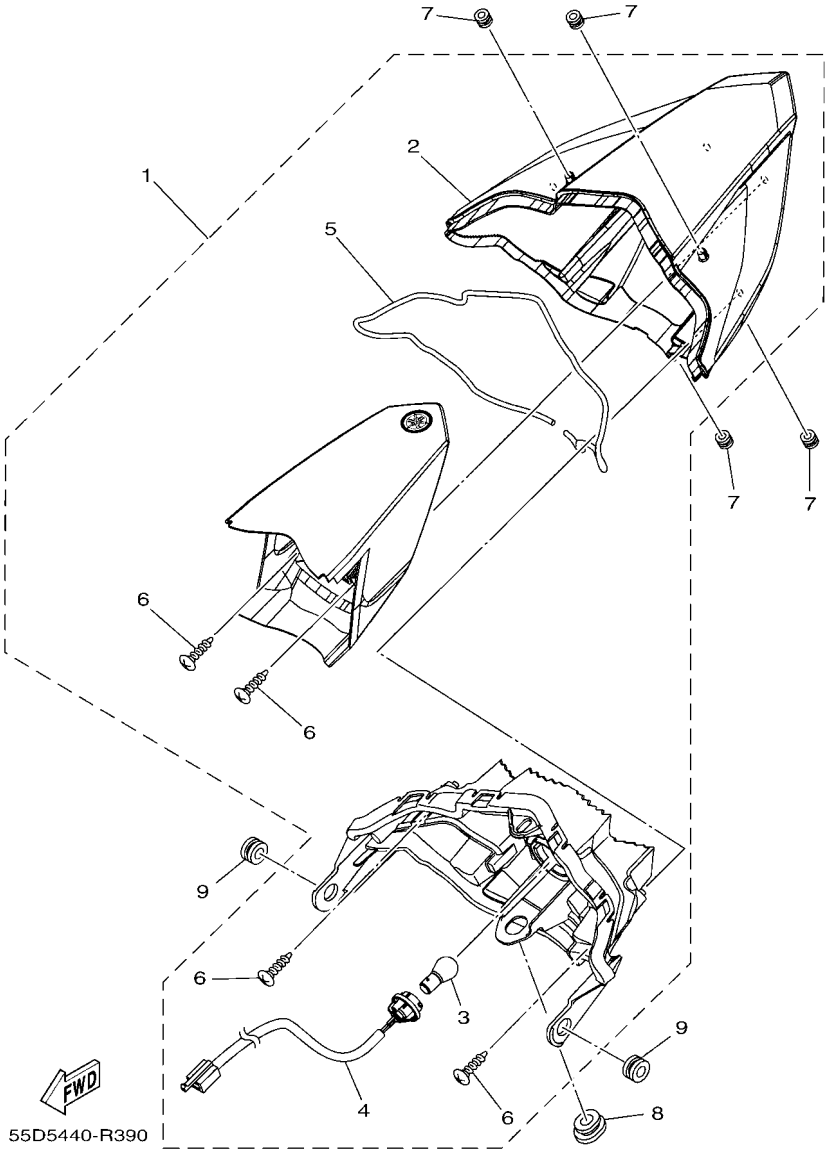

FIG. 42 TAILLIGHT

REF. NO.	PART NO.	DESCRIPTION	55DB	55DC				REMARKS
1	55D–H4710–00	TAILLIGHT UNIT ASSY	1	1				
2	55D–H4721–10	.LENS, TAILLIGHT	1	1				
3	1VP–H4714–00	.BULB, TAILLIGHT (12V-21/5W)	1	1				
4	55D–H4735–10	.SOCKET CORD ASSY	1	1				
5	55D–H4723–10	.GASKET, TAIL LENS	1	1				
6	97707–40616	.SCREW, TAPPING	4	4				
7	55C–H4759–00	GROMMET	4	4				
8	90480–01868	GROMMET	1	1				
9	90480–13807	GROMMET	2	2				

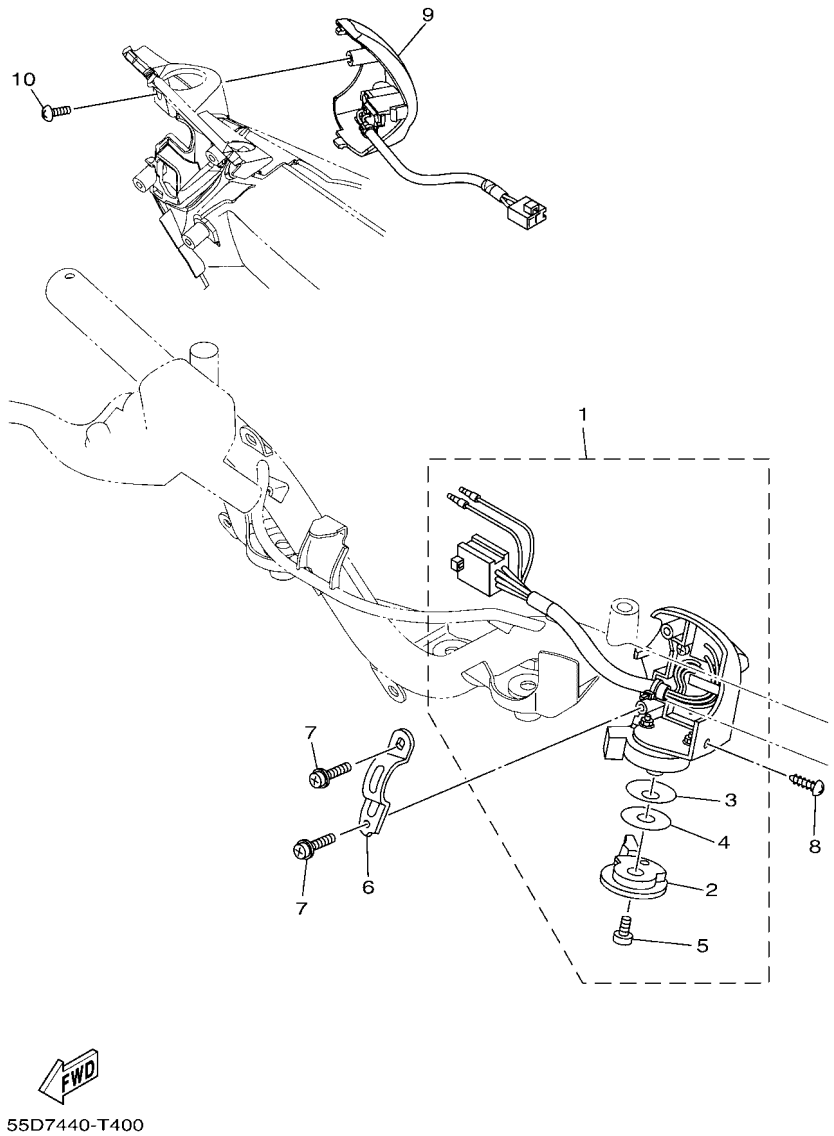

FIG. 43 HANDLE SWITCH & LEVER

REF. NO.	PART NO.	DESCRIPTION	55DB	55DC				REMARKS
1	1S8–H3973–02	SWITCH, HANDLE 3	1	1				
2	1S8–H3941–00	.LEVER, STARTER	1	1				
3	1S8–H3947–00	.SPRING	1	1				
4	1S8–H397X–00	.SPACER	1	1				
5	9850L–06008	.SCREW, PAN HEAD	1	1				
6	1S8–H3955–01	BRACKET 1	1	1				
7	97607–05216	SCREW, WITH WASHER	2	2				
8	97707–50012	SCREW, TRUSS HEAD TAPPING	1	1				
9	1KP–H3976–00	SWITCH, HANDLE 1	1	1				
10	97707–50012	SCREW, TRUSS HEAD TAPPING	1	1				

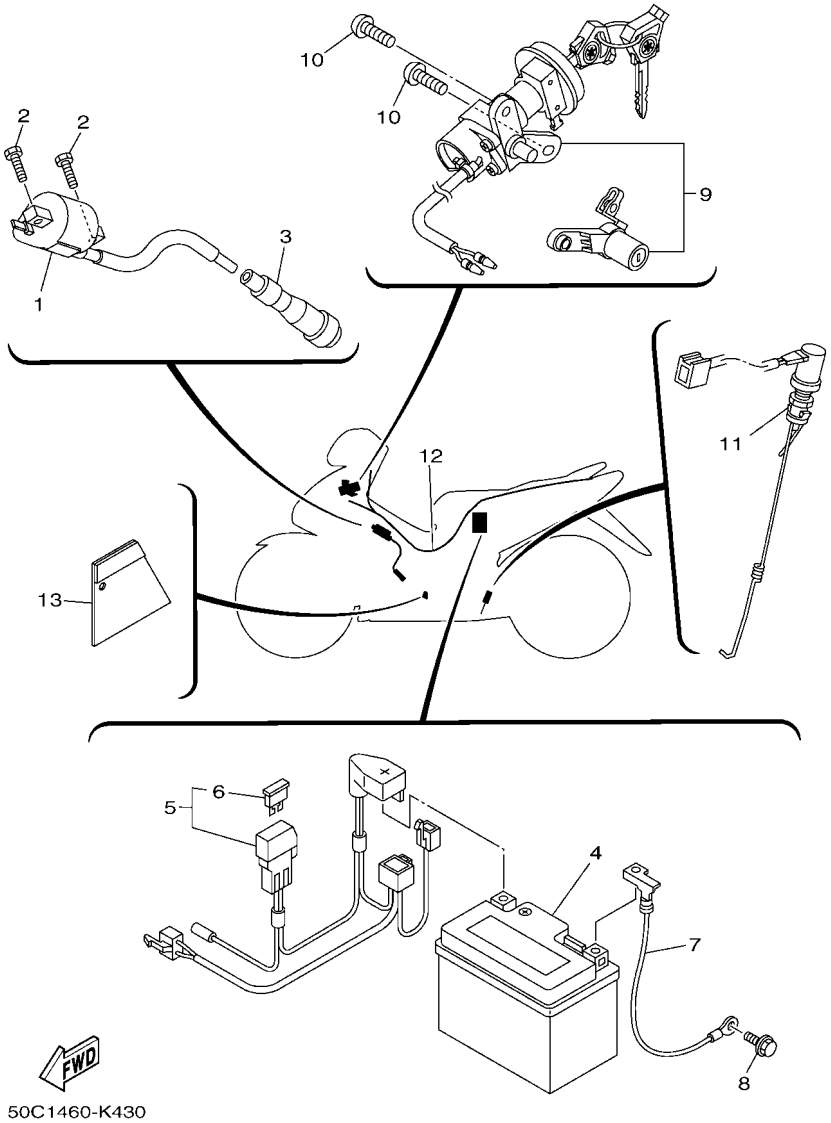

FIG. 44 ELECTRICAL 1

REF. NO.	PART NO.	DESCRIPTION	55DB	55DC				REMARKS
1	4US–H2310–20	IGNITION COIL ASSY	1	1				
2	97002–06016	BOLT, HEXAGON	2	2				
3	2ND–H2370–00	PLUG CAP ASSY	1	1				
4	10C–H2100–02	BATTERY ASSY (YUASA YTZ5S)	1	1				UR
	55D–H2100–00	BATTERY ASSY (PINACO PTZ5S)	1	1				UR
5	55C–H2150–10	FUSE HOLDER ASSY	1	1				
6	31D–H2151–00	.FUSE (7.5A)	1	1				
7	55C–H2116–00	WIRE, MINUS LEAD	1	1				
8	95027–06010	BOLT, FLANGE	1	1				
9	55C–XH252–00	MAIN SWITCH SUB ASSY.	1	1				
10	90149–06309	SCREW	2	2				
11	1S9–H2530–12	STOP SWITCH ASSY	1	1				
12	55D–H2590–20	WIRE HARNESS ASSY	1	1				
13	1S8–F117F–00	COVER	1	1				

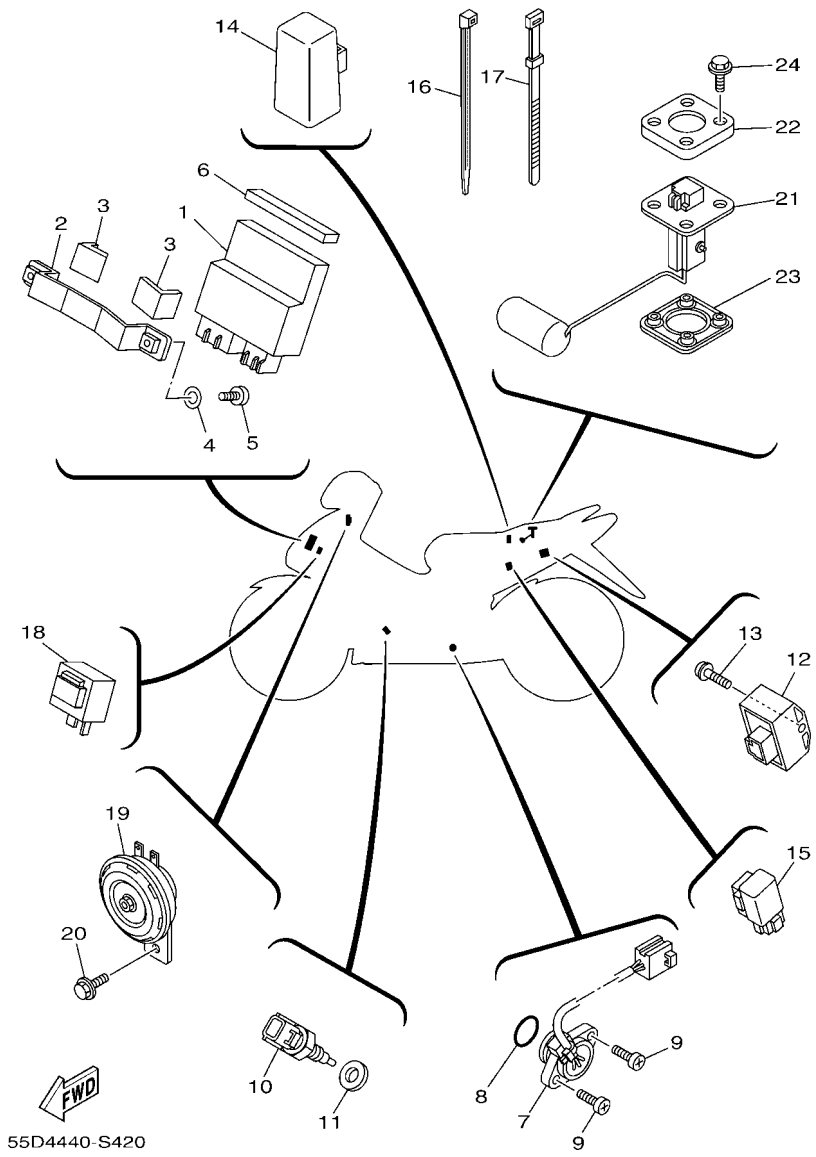

FIG. 45 ELECTRICAL 2

REF. NO.	PART NO.	DESCRIPTION	55DB	55DC				REMARKS
1	55D–H5540–20	C.D.I. UNIT ASSY	1	1				
2	55C–F8426–00	BRACKET 1	1	1				
3	90520–04804	DAMPER, PLATE	2	2				
4	90201–06830	WASHER, PLATE	2	2				
5	98507–06012	SCREW, PAN HEAD	2	2				
6	90520–96802	DAMPER, PLATE	1	1				
7	5YP–H2540–00	NEUTRAL SWITCH ASSY	1	1				
8	93210–21800	O-RING	1	1				
9	98507–05016	SCREW, PAN HEAD	2	2				
10	5YP–85790–00	THERMOSENSOR ASSY	1	1				
11	90430–12801	GASKET	1	1				
12	2LP–H1960–00	RECTIFIER & REGULATOR ASSY	1	1				
13	97607–06212	SCREW, WITH WASHER	1	1				
14	5TP–H1940–00	STARTER RELAY ASSY	1	1				
15	5YP–H1950–00	RELAY ASSY	1	1				
16	90464–50800	CLAMP	5	5				
17	3AY–H3936–10	BAND, SWITCH CORD	1	1				
18	1VP–83350–00	FLASHER RELAY ASSY	1	1				
19	55D–H3371–00	HORN	1	1				
20	95807–08012	BOLT, FLANGE	1	1				
21	1S8–H5752–00	SENDER UNIT ASSY, FUEL METER	1	1				
22	5BU–H5757–00	RETAINER	1	1				
23	5BU–H5753–01	GASKET, SENDER UNIT	1	1				
24	90119–05071	BOLT, WITH WASHER	4	4				

PART NO.	REF. NO.
1S8–11633–01	2 – 10
1S8–11681–01	2 – 3
5YP–12117–00	3 – 6
1WG–12118–00	3 – 5
5YP–12411–01	6 – 1
5LW–14103–00	9 – 27
50C–14105–00	9 – 29
31S–14112–00	9 – 4
509–14135–00	9 – 25
50C–14137–00	9 – 39
5P0–14141–13	9 – 37
5P0–14142–15	9 – 30
5HK–14147–00	9 – 11
5LW–14147–00	9 – 36
5FC–14149–00	9 – 35
5LW–14150–00	9 – 12
5LW–14171–10	9 – 38
22F–14173–00	9 – 28
3RW–14174–00	9 – 23
353–14186–00	9 – 13
5MP–14191–00	9 – 21
3G2–14231–23	9 – 10
4JG–14261–00	9 – 31
50C–14261–00	9 – 5
5HK–14275–00	9 – 33
33S–14280–00	9 – 32
5YP–14429–00	9 – 9
5YP–14561–00	9 – 20
50C–14589–00	9 – 6
5YP–1482K–00	1 – 8
55D–1490J–10	9 – 7
5AP–14940–00	9 – 34
5LW–14958–00	9 – 3
5HK–14985–00	9 – 15
5LW–14994–00	9 – 19
50C–14995–00	9 – 24
5LW–24411–00	9 – 2
4X8–24512–00	26 – 14
3T5–24612–20	26 – 18
1VP–83350–00	45 – 18
5YP–85790–00	45 – 10
1S8–E1102–00	1 – 1
1S8–E111F–00	4 – 8
5YP–E1133–10	1 – 2
55P–E1166–00	8 – 25
1S8–E1181–01	1 – 19
1S7–E1185–01	5 – 4
1S8–E1191–00	1 – 6

PART NO.	REF. NO.
2PV–E1193–00	1 – 14
1S7–E1196–00	5 – 5
50C–E1311–00	1 – 23
55D–E1351–00	1 – 24
1S8–E1422–00	2 – 6
50C–E1603–00	2 – 12
2S6–E1631–21	2 – 9
1S8–E1651–00	2 – 5
50C–E1951–00	5 – 8
1S7–E1952–01	5 – 9
2PV–E2111–00	3 – 1
5YP–E2113–00	3 – 4
5YP–E2119–00	3 – 3
2PV–E2121–00	3 – 2
5YP–E2126–00	3 – 7
5YP–E2151–00	3 – 8
1S8–E2156–00	3 – 14
5YP–E2157–01	4 – 7
5YP–E2159–00	3 – 9
	3 – 12
5YP–E2161–00	3 – 11
21S–E2170–01	4 – 1
5MX–E2210–00	4 – 15
1S8–E2213–01	4 – 17
5MX–E2222–00	4 – 16
1S8–E2231–00	4 – 11
5YP–E2241–00	4 – 12
1B9–E2280–02	4 – 5
5YP–E2288–00	4 – 6
5YP–E2405–00	6 – 6
1S8–E2413–00	6 – 2
1S7–E2422–00	5 – 1
50C–E2428–00	5 – 3
1S8–E2443–01	6 – 13
1S7–E2450–00	5 – 7
5YP–E2461–00	6 – 5
1S8–E2481–00	6 – 15
1S8–E2482–00	6 – 17
5YP–E2491–00	6 – 3
5YP–E2576–00	6 – 19
5P0–E2590–00	6 – 9
5YP–E2671–00	6 – 8
5YP–E2675–00	6 – 7
1S7–E3300–00	7 – 1
1S8–E3327–00	7 – 12
1S8–E3329–00	7 – 2
1S8–E3411–00	7 – 5
38B–E3440–01	7 – 8

PART NO.	REF. NO.
55D–E3447–10	7 – 9
5MX–E3474–01	8 – 10
50C–E3536–00	8 – 2
1S7–E3542–00	8 – 4
5MX–E3575–01	8 – 22
55P–E3586–00	8 – 3
55C–E4197–00	8 – 8
1S8–E4293–00	21 – 36
	22 – 36
50C–E4411–00	8 – 11
1S7–E4412–00	8 – 12
1S7–E4425–00	8 – 21
1S7–E4437–00	8 – 18
5TL–E443E–00	8 – 16
1S7–E4450–00	8 – 13
1S7–E4452–00	8 – 15
50C–E4453–00	8 – 14
1S8–E4613–00	10 – 5
55D–E4703–10	10 – 1
55D–E4718–10	10 – 2
29B–E4747–00	10 – 12
55D–E4799–10	10 – 3
55D–E4799–20	10 – 3
5YP–E4840–00	1 – 9
1S7–E4877–01	8 – 32
5YP–E4881–01	8 – 35
55C–E4882–00	8 – 28
5YP–E4890–00	1 – 10
55D–E4901–20	9 – 1
5YP–E5113–00	12 – 11
1S8–E5150–00	11 – 1
1S8–E5351–00	7 – 4
1S8–E5362–00	12 – 22
5YP–E5377–00	12 – 16
55D–E5411–00	12 – 1
55D–E5418–10	12 – 12
55D–E5421–00	12 – 17
55D–E5451–00	12 – 2
55D–E5461–00	12 – 18
5YP–E5514–00	14 – 1
1S8–E5521–00	14 – 2
55D–E5524–00	14 – 3
5YP–E5555–00	13 – 8
1ST–E5580–00	14 – 5
1ST–E5583–00	14 – 6
1S8–E5598–00	4 – 14
1ST–E5614–00	14 – 7
2N9–E5618–00	13 – 12

PART NO.	REF. NO.
1S8–E5620–00	13 – 11
5YP–E5641–00	13 – 2
1S9–E5661–00	13 – 1
5YP–E5664–00	13 – 4
5YP–E5671–00	13 – 3
5YP–E5674–00	13 – 9
5YP–E5696–00	13 – 7
5YP–E5767–00	13 – 5
5YP–E6116–00	15 – 1
5YP–E6131–00	15 – 4
1S8–E6135–00	15 – 29
5YP–E6143–00	15 – 13
5YP–E6144–00	15 – 7
5YP–E6150–00	15 – 18
1S8–E6181–00	15 – 17
55D–E6182–00	15 – 2
5YP–E6321–00	15 – 21
5YP–E6324–00	15 – 20
5YP–E6331–00	15 – 22
5YP–E6333–00	15 – 26
5HV–E6346–00	18 – 21
5YP–E6351–00	15 – 25
B6F–E6356–00	15 – 32
5YP–E6357–00	15 – 31
5YP–E6371–00	15 – 19
5YP–E6383–00	15 – 23
5YP–E6384–00	15 – 24
5YP–E6512–00	15 – 11
5YP–E6539–00	15 – 5
5YP–E6586–00	15 – 12
5YP–E6611–00	15 – 3
5YP–E6620–00	15 – 9
5YP–E6628–00	15 – 28
5YP–E6777–00	15 – 27
5YP–E7121–00	16 – 6
5YP–E7131–00	16 – 2
5YP–E7141–00	16 – 3
5YP–E7211–00	16 – 22
5YP–E7221–00	16 – 14
5YP–E7231–00	16 – 21
5YP–E7241–00	16 – 20
5YP–E7411–00	16 – 1
5YP–E7421–00	16 – 13
1S8–E7456–00	16 – 29
1S8–E7471–00	16 – 11
5YP–E8101–00	18 – 1
55D–E8110–10	18 – 22
5H3–E8113–00	18 – 23

PART NO.	REF. NO.
5YP–E8120–00	17 – 8
5YP–E8127–00	18 – 6
5YP–E8140–00	18 – 7
5YP–E8172–00	18 – 3
1S8–E8173–00	18 – 16
1S7–E8175–00	18 – 9
5YP–E8179–00	18 – 2
1S8–E817A–00	18 – 17
5YP–E8181–00	18 – 4
5YP–E8185–00	17 – 2
5YP–E8186–00	18 – 18
5YP–E8337–00	18 – 10
1S7–E8511–00	17 – 11
1S7–E8512–00	17 – 12
1S8–E8531–00	17 – 9
1S7–E8540–10	17 – 1
4TT–E8542–00	17 – 6
5TN–E8545–00	16 – 16
5YP–E8549–00	17 – 3
5YP–E8561–00	16 – 15
55D–F1110–20	19 – 1
55C–F1161–10	24 – 13
55P–F1173–00	21 – 25
	22 – 25
1S8–F117F–00	44 – 13
1S8–F117G–00	19 – 15
55C–F117K–00	27 – 16
1S8–F1315–00	19 – 10
1S8–F1316–00	19 – 11
55C–F137U–00	34 – 16
	35 – 16
55C–F137V–00	34 – 26
	35 – 26
55D–F137W–00–P0	36 – 4
55D–F137W–00–P4	36 – 4
55D–F137W–00–P5	36 – 4
55D–F137W–00–P6	36 – 4
55D–F137X–00–P0	36 – 5
55D–F137X–00–P4	36 – 5
55D–F137X–00–P5	36 – 5
55D–F137X–00–P6	36 – 5
1S8–F139R–00	19 – 12
1S8–F139X–00	19 – 13
55C–F1511–00–P2	20 – 1
55C–F1511–00–P7	20 – 1
55C–F1511–00–PB	20 – 1
55C–F1511–00–PC	20 – 1
15K–F1518–00	20 – 5

PART NO.	REF. NO.
55D–F1566–00	36 – 9
55D–F1567–00	36 – 10
55C–F160E–00	20 – 12
55C–F1611–10	20 – 6
55D–F1650–00	23 – 8
55C–F1711–00–P2	21 – 1
55C–F1711–00–P3	21 – 1
55C–F1711–00–PB	21 – 1
55C–F1711–00–PC	22 – 1
55C–F1721–00–P2	21 – 3
55C–F1721–00–P3	21 – 3
55C–F1721–00–PB	21 – 3
55C–F1721–00–PC	22 – 3
55C–F172E–00	21 – 15
	22 – 15
5YP–F172K–00	21 – 19
	22 – 19
1S8–F172L–00	21 – 23
	22 – 23
5YP–F172M–00	21 – 24
	22 – 24
1S8–F172W–00	21 – 26
	22 – 26
55C–F1731–00–P0	21 – 6
55C–F1731–00–P8	21 – 6
55C–F1731–00–P9	22 – 6
55D–F173E–B0	21 – 37
55D–F173E–C0	21 – 37
55D–F173E–D0	21 – 37
55D–F173E–E0	22 – 37
55D–F173F–70	21 – 38
55D–F173F–80	21 – 38
55D–F173F–90	21 – 38
55D–F173F–A0	22 – 38
55D–F173T–00	36 – 6
55D–F173U–00	36 – 7
55C–F1741–00–P0	21 – 10
55C–F1741–00–P8	21 – 10
55C–F1741–00–P9	22 – 10
55D–F174G–L0	21 – 39
55D–F174G–M0	21 – 39
55D–F174G–N0	21 – 39
55D–F174G–P0	22 – 39
55D–F174H–L0	21 – 40
55D–F174H–M0	21 – 40
55D–F174H–N0	21 – 40
55D–F174H–P0	22 – 40
55D–F174J–F0	21 – 41

PART NO.	REF. NO.
55D–F174J–G0	21 – 41
55D–F174J–H0	21 – 41
55D–F174K–F0	21 – 42
55D–F174K–G0	21 – 42
55D–F174K–H0	21 – 42
55C–F177G–00	21 – 31
	22 – 31
55D–F1781–30	22 – 41
	22 – 42
55C–F1817–00	21 – 28
	22 – 28
1S9–F1871–01	21 – 17
	22 – 17
5YP–F1875–01	21 – 22
	22 – 22
55D–F2110–00	23 – 1
5B9–F2123–00	23 – 2
50C–F2141–00	23 – 6
1S8–F2151–00	23 – 3
55C–F2210–00	23 – 11
55D–F3100–10	25 – 1
55C–F3110–00	25 – 8
4VK–F3111–10	25 – 19
55P–F3126–10	25 – 5
55P–F3136–10	25 – 2
5VW–F313B–00	34 – 6
	35 – 6
50C–F3141–00	25 – 15
5LL–F3144–00	25 – 14
4UV–F3145–00	25 – 3
	25 – 6
2JG–F3147–00	25 – 20
5TF–F3152–00	25 – 11
5P0–F3156–00	25 – 4
	25 – 7
2JG–F3157–00	25 – 10
509–F3158–L0	25 – 12
5P2–F3170–00	25 – 9
55D–F317L–00–P0	36 – 1
55D–F317L–00–P1	36 – 1
55D–F317L–00–P2	36 – 1
55D–F317L–00–P3	36 – 1
31D–F3181–50	25 – 13
55C–F331A–10	24 – 11
50C–F3340–10	25 – 16
5YW–F3346–10	25 – 18
55C–F3389–00	24 – 15
55D–F3391–00	34 – 1

PART NO.	REF. NO.
55D–F3391–00	35 – 1
156–F3411–00	25 – 17
4RT–F3411–10	24 – 4
1KL–F3412–10	24 – 1
4RT–F3412–10	24 – 3
5TL–F3416–00	24 – 6
1P6–F341E–10	24 – 5
5VL–F341E–10	24 – 2
55C–F3461–00	24 – 8
1S8–F4110–00	26 – 1
29B–F411B–00	34 – 56
	35 – 56
21S–F4141–00	26 – 7
55C–F4311–00	26 – 9
55C–F4312–00	26 – 10
1S8–F4339–00	26 – 2
1S8–F4397–00	26 – 4
5YP–F4500–01	26 – 13
5LW–F4610–01	26 – 17
1S8–F4638–00	26 – 3
55D–F464U–00	27 – 25
55C–F470F–10	27 – 2
5TF–F4723–00	27 – 3
55C–F4726–00	27 – 5
2WB–F4727–00	27 – 9
1S8–F4728–00	27 – 12
55C–F4730–10	27 – 1
4HF–F4741–00	27 – 4
1S8–F4742–00	27 – 6
55D–F4742–00	27 – 22
1S8–F4768–00	27 – 27
55D–F4773–00–P0	27 – 19
55D–F4773–00–P2	27 – 19
55D–F4773–00–P3	27 – 19
55D–F4773–00–P5	27 – 19
1DY–F4780–00	27 – 10
55C–F478E–10	27 – 18
1S8–F5168–00–33	28 – 1
1S8–F5168–00–P3	28 – 1
3NA–F5181–01	28 – 8
5TN–F5190–01	28 – 11
5YP–F530K–00	30 – 8
1S8–F5321–00–33	30 – 7
1S8–F5338–00–33	30 – 1
1S8–F5338–00–P3	30 – 1
5LW–F533A–00	30 – 12
4UV–F5351–00	30 – 13
1S8–F5355–00	30 – 11

PART NO.	REF. NO.
1S8–F5364–00	30 – 6
1S8–F5366–00	30 – 15
1S8–F5371–01	30 – 33
55D–F5377–00	30 – 30
55S–F5381–00	30 – 25
55D–F5383–00	30 – 27
50C–F5388–00	30 – 28
50C–F5389–00	30 – 29
5XK–F5412–00	30 – 21
3YR–F5439–10	30 – 19
5P0–F5802–00	29 – 4
5YP–F5803–50	29 – 5
3C1–F5805–10	29 – 9
44D–F580U–02	29 – 3
44S–F580U–02	29 – 3
5P0–F5827–00	29 – 14
31D–F582U–00	29 – 1
1S9–F583T–03	32 – 4
5HV–F5852–00	32 – 6
5HV–F5854–10	32 – 13
1S9–F585B–00	32 – 12
1S9–F5867–01	32 – 5
50C–F5872–00	32 – 1
55C–F5875–10	24 – 17
55C–F5876–10	24 – 21
55P–F587A–00	24 – 19
5YP–F5917–00	29 – 6
5P0–F5919–01	29 – 11
5YP–F5924–00	29 – 12
5YP–F5925–01	29 – 10
5YP–F5937–00	29 – 7
5YP–F5939–00	29 – 13
55D–F6143–11–P0	31 – 8
55D–F6143–11–P2	31 – 8
55D–F6143–11–P6	31 – 8
55D–F6143–11–P7	31 – 8
55C–F6145–00	31 – 15
55D–F6210–00	31 – 1
1S8–F622F–00	31 – 30
55C–F622H–00	31 – 29
55C–F6240–00	31 – 20
1S8–F6241–00	31 – 22
1S8–F6242–00	31 – 21
55C–F6246–00	31 – 27
16S–F6257–00	31 – 28
2WB–F6280–00	31 – 23
55D–F6281–00	31 – 33
55D–F6282–00	31 – 34

PART NO.	REF. NO.
2WB–F6290–00	31 – 24
55C–F6301–10	31 – 25
55C–F6326–00	31 – 4
55C–F6331–10	31 – 32
1S9–F6332–00	32 – 14
55D–F7111–00	33 – 1
5YP–F7112–00	33 – 3
1S8–F7114–00	33 – 2
55D–F7211–00	33 – 9
55S–F7231–00	33 – 11
1S8–F7311–00	33 – 17
5TF–F7314–00	33 – 30
	33 – 38
1S8–F7411–00	33 – 21
5LL–F7413–00	33 – 23
5TF–F7424–00	33 – 40
55C–F7430–00–P1	33 – 24
5BU–F7433–00	33 – 26
55C–F7440–00–P1	33 – 32
5BU–F7444–00	33 – 34
5BU–F7445–00	33 – 27
	33 – 35
55C–F7452–00–P1	33 – 25
55C–F7462–00–P1	33 – 33
55D–F8100–01	19 – 16
55D–F8187–00	34 – 9
	35 – 9
1S8–F8217–00	31 – 6
1S8–F8227–00	31 – 7
55C–F8273–00	34 – 37
	35 – 37
55C–F8274–00	34 – 39
	35 – 39
50C–F8307–00	34 – 27
	35 – 27
55C–F8311–00–P0	34 – 14
55C–F8311–00–P7	34 – 14
55C–F8311–00–PA	34 – 14
55C–F8311–00–PB	35 – 14
55C–F8312–00–P0	34 – 24
55C–F8312–00–P7	34 – 24
55C–F8312–00–PA	34 – 24
55C–F8312–00–PB	35 – 24
55D–F831T–00	36 – 14
55D–F8321–00	34 – 47
	35 – 47
55D–F8322–00	34 – 48
	35 – 48

PART NO.	REF. NO.
55D–F832T–00	36 – 15
1S8–F8336–00	34 – 50
	35 – 50
55D–F8344–00	36 – 8
55D–F8345–10–P1	34 – 2
	35 – 2
55D–F8345–10–P2	34 – 2
55C–F835J–00	34 – 15
	35 – 15
55C–F835K–00	34 – 25
	35 – 25
B17–F836B–20	36 – 11
55C–F836K–00	34 – 35
	35 – 35
55D–F8373–00	36 – 2
B17–F837B–20	36 – 12
55D–F8381–00	31 – 12
55D–F8385–00	36 – 13
55D–F8391–M0	34 – 52
55D–F8391–N0	34 – 52
55D–F8391–P0	34 – 52
55D–F8391–R0	35 – 52
55D–F8392–M0	34 – 53
55D–F8392–N0	34 – 53
55D–F8392–P0	34 – 53
55D–F8392–R0	35 – 53
55D–F8398–60	34 – 54
55D–F8398–70	34 – 54
55D–F8398–80	34 – 54
55D–F8398–90	35 – 54
55D–F8399–60	34 – 55
55D–F8399–70	34 – 55
55D–F8399–80	34 – 55
55D–F8399–90	35 – 55
55C–F8426–00	45 – 2
55C–F842N–00	34 – 44
	35 – 44
55C–F844E–00	34 – 3
	35 – 3
1S7–H1410–01	37 – 2
55S–H1450–00	37 – 1
1S7–H1800–02	38 – 1
3AY–H1801–00	38 – 2
3AY–H1828–00	38 – 4
5YP–H183G–00	38 – 5
1S7–H1861–00	38 – 3
5TP–H1940–00	45 – 14
5YP–H1950–00	45 – 15

PART NO.	REF. NO.
2LP–H1960–00	45 – 12
55D–H2100–00	44 – 4
10C–H2100–02	44 – 4
55C–H2116–00	44 – 7
5VW–H2131–00	21 – 35
	22 – 35
55C–H2150–10	44 – 5
31D–H2151–00	44 – 6
4US–H2310–20	44 – 1
2ND–H2370–00	44 – 3
1S9–H2530–12	44 – 11
5YP–H2540–00	45 – 7
55D–H2590–20	44 – 12
55D–H3310–20	39 – 1
55D–H3311–00	39 – 3
	39 – 6
	39 – 9
	39 – 16
1VP–H3318–00	39 – 22
55D–H3320–20	39 – 4
55D–H3323–00	39 – 11
55D–H332M–00	39 – 18
55D–H3330–01	39 – 8
55D–H3333–00	39 – 13
	39 – 20
55D–H3336–20	39 – 2
55D–H333A–00	39 – 10
55D–H333E–01	39 – 12
55D–H3340–01	39 – 15
55D–H3346–20	39 – 5
55D–H334A–00	39 – 17
55D–H334E–01	39 – 19
55D–H3358–00	39 – 14
	39 – 21
55D–H3371–00	45 – 19
55D–H3510–30	40 – 1
5BU–H3517–10	40 – 3
5LW–H3518–00	40 – 2
55D–H3519–00	40 – 4
55C–H3550–10	40 – 7
55C–H3559–00–P9	31 – 16
55C–H3559–00–PA	31 – 16
1S9–H3922–01	32 – 7
3AY–H3936–10	45 – 17
1S8–H3941–00	43 – 2
1S8–H3947–00	43 – 3
1S8–H3955–01	43 – 6
1S8–H3973–02	43 – 1

PART NO.	REF. NO.
1KP–H3976–00	43 – 9
1S8–H397X–00	43 – 4
18D–H3980–00	32 – 10
55C–H411T–00	41 – 9
55C–H411U–00	41 – 10
55D–H4310–00	41 – 1
1VP–H4314–00	41 – 2
1VP–H4397–00	41 – 4
55D–H4710–00	42 – 1
1VP–H4714–00	42 – 3
55D–H4721–10	42 – 2
55D–H4723–10	42 – 5
55D–H4735–10	42 – 4
55C–H4759–00	42 – 7
55C–H4781–00	41 – 5
55C–H4782–00	41 – 7
55D–H4790–00	27 – 28
1CJ–H5111–00	20 – 10
55D–H5130–00	20 – 9
55D–H5540–20	45 – 1
1S8–H5752–00	45 – 21
5BU–H5753–01	45 – 23
5BU–H5757–00	45 – 22
18D–H5885–00	9 – 8
1S9–W0041–00	32 – 16
4C9–W0048–00	29 – 8
1S8–WE140–11	2 – 1
1S8–WE141–00	2 – 2
55C–XH252–00	44 – 9
90101–06278	30 – 14
90105–06061	8 – 7
90105–06400	6 – 4
90105–08850	1 – 16
90105–088D8	19 – 5
90105–088D9	19 – 4
90105–10036	24 – 9
90105–10323	23 – 12
90105–10831	29 – 15
90105–10861	19 – 3
90109–06577	32 – 8
90109–08034	33 – 18
90109–08822	30 – 34
90110–08199	33 – 31
	33 – 39
90111–06807	10 – 4
90111–08853	29 – 2
90116–08017	30 – 20
90119–05071	45 – 24
90119–06044	20 – 7
	21 – 18
	21 – 34
	22 – 18
	22 – 34
	24 – 16
90119–06051	8 – 24
90119–06190	26 – 6
90149–06011	26 – 15
90149–06309	44 – 10
90149–06829	4 – 13
90150–05806	31 – 14
90153–06803	1 – 3
	1 – 25
90159–06033	27 – 17
90159–06181	21 – 9
	21 – 13
	22 – 9
	22 – 13
	34 – 19
	34 – 30
	34 – 36
	34 – 45
	35 – 19
	35 – 30
	35 – 36
	35 – 45
90163–05803	8 – 19
90170–05302	3 – 10
	3 – 13
90170–08258	30 – 22
90173–06015	41 – 3
90175–06013	33 – 14
90179–05802	31 – 13
90179–08818	19 – 8
90179–10017	13 – 13
90179–10811	19 – 9
90179–12659	15 – 16
90179–14001	15 – 30
90179–25802	24 – 7
90183–05807	20 – 8
	21 – 2
	21 – 4
	21 – 7
	21 – 11
	21 – 33
	22 – 2
	22 – 4
90183–05807	22 – 7
	22 – 11
	22 – 33
	31 – 11
	31 – 17
	34 – 7
	34 – 18
	34 – 29
	34 – 42
	35 – 7
	35 – 18
	35 – 29
	35 – 42
90183–06023	8 – 23
90185–10091	28 – 9
90185–10154	24 – 10
90201–06069	6 – 12
90201–06071	27 – 14
90201–06072	20 – 3
90201–06557	34 – 23
	34 – 34
	35 – 23
	35 – 34
90201–06822	34 – 5
	35 – 5
	36 – 17
90201–06830	45 – 4
90201–06882	27 – 24
90201–068N7	27 – 7
90201–08609	1 – 17
90201–08612	10 – 11
	31 – 5
90201–08804	19 – 6
90201–088N6	30 – 36
90201–10118	32 – 3
90201–10141	10 – 9
90201–101J1	19 – 7
	28 – 10
90201–12019	15 – 15
90201–122H1	37 – 6
90201–126A7	18 – 15
90201–12817	18 – 11
90201–15700	16 – 7
	16 – 23
90201–158D1	33 – 7
90201–163H8	33 – 4
90201–167P7	15 – 10
90201–16803	13 – 6
90201–25290	14 – 4
90201–26802	16 – 17
90202–05193	26 – 16
90202–15800	30 – 35
90209–17285	16 – 4
90209–18208	16 – 18
90249–12008	33 – 13
90252–23800	33 – 29
	33 – 37
90280–03017	2 – 8
90340–14824	12 – 7
90340–32823	12 – 9
90387–06063	12 – 15
90387–061N0	27 – 21
90387–06681	23 – 5
90387–06804	20 – 4
90387–068B0	8 – 33
90387–07819	23 – 10
90387–08822	10 – 13
90387–09801	34 – 21
	34 – 32
	35 – 21
	35 – 32
90387–10277	28 – 7
90387–10805	33 – 41
90387–127Y0	30 – 17
90401–10812	32 – 2
90430–06817	1 – 4
	1 – 13
	1 – 26
90430–12801	45 – 11
90445–07812	26 – 8
90445–09823	21 – 27
	22 – 27
90450–27803	6 – 16
	6 – 18
90462–08814	8 – 20
90462–08817	12 – 6
90464–24803	31 – 36
90464–50800	45 – 16
90464–50801	34 – 51
	35 – 51
90467–07029	8 – 9
90467–08003	21 – 29
	22 – 29
90467–08075	26 – 12
90467–08801	8 – 5
	8 – 6
90467–09006	21 – 30
	22 – 30
	26 – 11
90467–10038	6 – 20
90467–12800	8 – 17
90467–13064	8 – 27
90467–13858	8 – 26
90467–14117	8 – 31
90467–15012	8 – 29
	8 – 30
90480–01803	6 – 14
90480–01813	34 – 41
	35 – 41
90480–01868	19 – 14
	42 – 8
90480–13805	21 – 21
	22 – 21
90480–13807	34 – 12
	35 – 12
	42 – 9
90480–13808	12 – 14
90480–13867	34 – 13
	35 – 13
90480–14872	27 – 13
90480–15363	6 – 10
90480–18418	34 – 20
	34 – 31
	35 – 20
	35 – 31
90501–030A0	14 – 8
90501–04801	15 – 14
90501–06022	17 – 7
90501–06800	17 – 10
90501–10245	33 – 12
90501–125E9	18 – 14
90501–18576	7 – 6
90506–12001	30 – 9
90506–15001	30 – 10
90506–23804	33 – 20
90506–35806	33 – 6
90508–40801	33 – 10
90520–02806	21 – 5
	22 – 5
90520–02807	21 – 32
	22 – 32
90520–02813	31 – 2
90520–02819	36 – 3
90520–04804	45 – 3
90520–04806	21 – 14
	22 – 14
90520–04813	31 – 9
90520–05806	34 – 10
	35 – 10
90520–10810	34 – 11
	35 – 11
90520–96802	45 – 6
90560–10292	28 – 2
90560–12145	30 – 2
91317–06014	14 – 9
91317–06016	4 – 18
	13 – 10
	37 – 4
91317–06025	17 – 4
	37 – 3
91317–06030	31 – 31
91317–06100	1 – 22
91317–10100	19 – 2
91401–20012	30 – 39
	33 – 15
91401–30030	33 – 5
	33 – 8
91702–08042	33 – 28
	33 – 36
91811–10005	1 – 7
92017–05025	7 – 3
92017–06010	24 – 14
	24 – 18
92017–06012	34 – 4
	35 – 4
	36 – 16
92017–06040	34 – 4
	35 – 4
92907–06600	33 – 16
92907–08200	30 – 37
93101–10841	12 – 24
93102–12883	18 – 5
93102–16800	13 – 14
93102–20881	16 – 27
93103–10801	5 – 2
93106–20816	28 – 3
93106–26815	30 – 16
93210–068E9	18 – 19
93210–09805	4 – 2
93210–11802	1 – 15
93210–14899	12 – 8
93210–19809	5 – 15

PART NO.	REF. NO.
93210–198F0	12 – 23
93210–21800	45 – 8
93210–26801	38 – 6
93210–32803	12 – 10
93210–32807	8 – 1
93210–34801	7 – 7
93210–41041	30 – 5
93210–59800	7 – 11
93210–84801	5 – 6
93306–000Y3	5 – 10
93306–001X2	4 – 3
93306–002X8	16 – 25
93306–004XB	30 – 18
93306–004XR	16 – 9
93306–204X9	16 – 26
93306–252X1	16 – 10
93306–300X8	28 – 4
93306–301YM	30 – 4
93306–301YN	30 – 3
93306–305X7	2 – 7
93310–325X1	14 – 10
93310–528X7	2 – 4
93340–212Y2	18 – 12
93410–20809	16 – 5
93410–22820	16 – 19
93450–16115	2 – 11
93503–16807	15 – 33
93602–08810	15 – 6
93604–10837	18 – 13
93604–12831	17 – 5
93605–06800	4 – 4
93822–15811	16 – 28
93900–00817	28 – 6
	30 – 24
94107–17873	28 – 5
94108–17868	30 – 23
94568–84113	30 – 31
94568–A8096	4 – 10
94668–84001	30 – 32
94700–00884	1 – 18
95027–06010	4 – 9
	16 – 30
	44 – 8
95027–06012	5 – 12
95027–06014	1 – 11
95027–06020	1 – 12
95027–06025	5 – 11
	5 – 13

PART NO.	REF. NO.
95027–06050	5 – 14
9502L–06012	7 – 13
9502L–06020	7 – 10
9502L–06040	12 – 4
	12 – 20
9502L–06045	11 – 5
9502L–06050	11 – 4
	12 – 5
	12 – 21
9502L–06060	11 – 3
	12 – 25
95304–08700	30 – 38
95307–06600	27 – 8
	27 – 15
95307–08700	33 – 19
95602–10200	23 – 13
95607–12200	30 – 26
9560M–06100	32 – 9
95617–08620	1 – 5
95617–12100	23 – 7
95702–06500	20 – 11
95707–06500	18 – 20
	24 – 12
95707–08500	10 – 6
95707–10500	10 – 8
95707–12500	37 – 5
95807–06010	41 – 11
95807–06012	23 – 4
	24 – 20
	24 – 22
95807–06020	21 – 20
	22 – 20
	34 – 22
	34 – 33
	34 – 49
	35 – 22
	35 – 33
	35 – 49
95807–06025	12 – 13
95807–08012	45 – 20
95807–08035	10 – 10
95827–06014	18 – 8
	23 – 9
95827–06016	6 – 11
	20 – 2
95827–06020	27 – 20
95827–08016	33 – 22
95827–10045	10 – 7

PART NO.	REF. NO.
97002–06016	44 – 2
97007–06025	26 – 5
97007–08016	31 – 3
97027–06016	8 – 34
97027–08020	18 – 24
97607–04114	9 – 26
97607–05216	43 – 7
97607–06212	45 – 13
9760L–04212	32 – 11
97707–40616	42 – 6
97707–50012	21 – 8
	21 – 12
	21 – 16
	22 – 8
	22 – 12
	22 – 16
	31 – 19
	34 – 38
	34 – 40
	35 – 38
	35 – 40
	43 – 8
	43 – 10
97707–50014	31 – 10
	31 – 18
	34 – 8
	34 – 17
	34 – 28
	34 – 43
	34 – 46
	35 – 8
	35 – 17
	35 – 28
	35 – 43
	35 – 46
97707–50016	39 – 7
	40 – 5
	41 – 6
	41 – 8
97707–50025	40 – 6
98507–04008	9 – 14
98507–04014	9 – 22
98507–04018	9 – 17
98507–05008	9 – 16
98507–05010	9 – 18
	27 – 26
98507–05016	31 – 26
	45 – 9

PART NO.	REF. NO.
98507–05025	31 – 35
98507–06012	27 – 11
	45 – 5
98507–06020	27 – 23
9850L–06008	43 – 5
98517–06012	16 – 12
9870M–04012	32 – 15
99009–15400	16 – 8
	16 – 24
99009–28400	15 – 8
99530–10114	1 – 20
	1 – 21
	11 – 2
	12 – 3
	12 – 19

PART NO.	REF. NO.

PART NO.	REF. NO.