YAMAHA

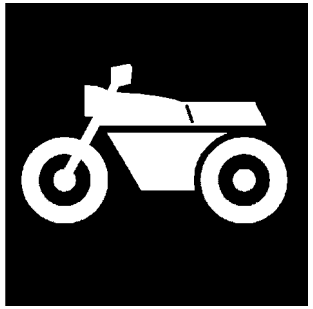

PARTS CATALOGUE

YZF155 (B2S2) MALAYSIA

YAMAHA GENUINE Parts & Accessories

1VB2S-440E5

( )

YZF155
PARTS CATALOGUE
©2019 by Yamaha Motor Co., Ltd.
1st edition, July 2019
All rights reserved.
Any reprinting or unauthorized use
without the written permission of
Yamaha Motor Co., Ltd.
is expressly prohibited.
Printed in Japan.

FOREWORD

This Parts Catalogue is related to the parts for the model(s) on the cover page. When you are ordering replacement parts, please refer to this Parts Catalogue and quote both part numbers and part names correctly.

1. Modifications or additions which have been made after the issue of the Parts Catalogue will be announced in the Parts News.
   It is advisable that you make the necessary corrections to the Parts Catalogue according to the Parts News.

2. Abbreviations
   The following abbreviations are used in this Parts Catalogue.

   "UR" Use specified parts number.

   "UN" Use as many as needed.

   "AP" Alternate Parts

   "LM" Locally Made (Parts need to be ordered locally)

   "F#" Frame No. (Applicable machine No.)

   "O/S" Over Size

3. The number of components for assembly
   - Parts, which are to be supplied in an assembly, are listed with a dot (.) in front of the part name as shown below.
   - The numeral appearing to the right of each component part indicates the quantity of parts for each assembly unit.

PART NO.	DESCRIPTION	Q'TY	REMARKS
2F5–83310–60	FRONT FLASHER LIGHT ASSY	2	
115–83311–60	.BULB (6V–18W)	1	

4. Applicable colours of graphics are represented in the "REMARKS" as shown below.

PART NO.	DESCRIPTION	Q'TY	REMARKS
2N4–24110–00–X5	FUEL TANK COMP.	2	MXR
3J1–24240–10	.GRAPHIC, FUEL TANK	1	FOR MXR

5. Note that the illustrations for reference in finding parts numbers are not to be used for assembling. When assembling, please use the applicable service manual.

6. The asterisk (*) before a reference number indicates modified items after the first edition.

7. Applicable Serial No.

Frame Serial No.

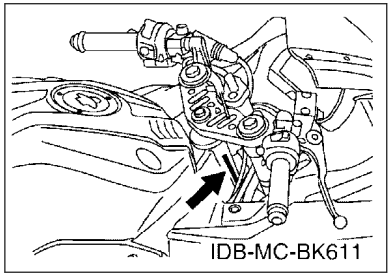

Engine Serial No.

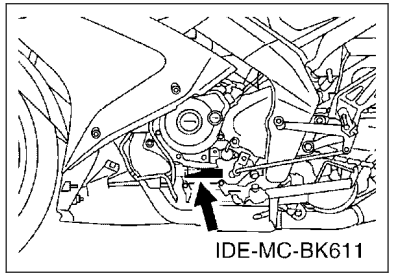

8. Applicable Colour Code (The (*) mark shows Model colour.)

Abbreviation	Colour Name	Colour Code
DPBM15	DEEP PURPLISH BLUE METALLIC 15	1329
DPBMC(*)	DEEP PURPLISH BLUE METALLIC C	0564
MBL2	MAT BLACK 2	0582
MNM3	MAT GRAY METALLIC 3	1278
SM12(*)	BLACK METALLIC 12	1723
YM6(*)	YELLOW METALLIC 6	1440

9. Applicable Starting Serial No.

Frame Serial No.

Serial No.	Name Of Q’ty Column	Model Code

Engine Serial No.

Serial No.	Name Of Q’ty Column	Model Code

CONTENTS

ENGINE

CYLINDER HEAD....1
CRANKSHAFT & PISTON....2
VALVE....4
CAMSHAFT & CHAIN....5
WATER PUMP....6
RADIATOR & HOSE....7
OIL PUMP....8
INTAKE....9
EXHAUST....11
CRANKCASE....12
CRANKCASE COVER 1....13
STARTER CLUTCH....14
CLUTCH....15
TRANSMISSION....17
SHIFT CAM & FORK....19
SHIFT SHAFT....20

CHASSIS

FRAME....21
FENDER....22
SIDE COVER....24
REAR ARM & SUSPENSION....26
STEERING....27
FRONT FORK....28
FUEL TANK....30
SEAT....32
FRONT WHEEL....33
FRONT BRAKE CALIPER....34
REAR WHEEL....35
REAR BRAKE CALIPER....36
STEERING HANDLE & CABLE....37
FRONT MASTER CYLINDER....38
STAND & FOOTREST....39
REAR MASTER CYLINDER....41
LEG SHIELD....42
WINDSHIELD....44
GENERATOR....47
STARTING MOTOR....48
FLASHER LIGHT....49
METER....51
HEADLIGHT....52
TAILLIGHT....53
HANDLE SWITCH & LEVER....54
ELECTRICAL 1....55
ELECTRICAL 2....56

INDEX

NUMERICAL INDEX....58

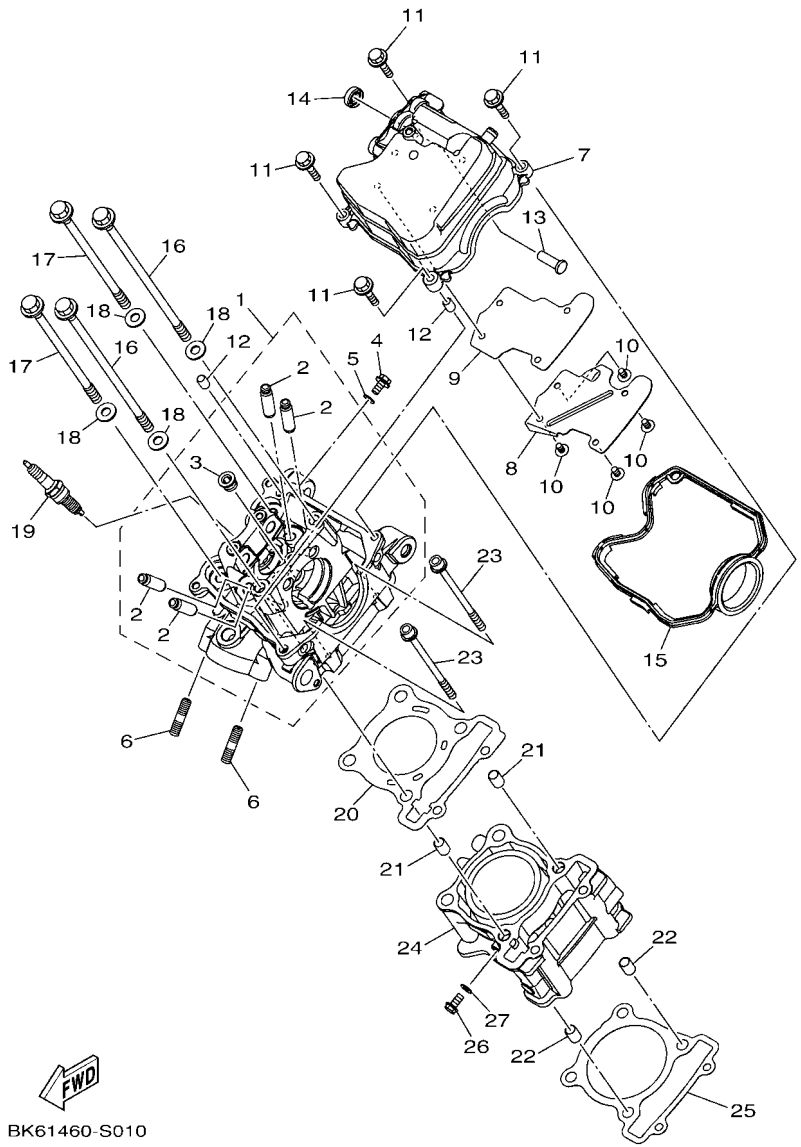

FIG. 1 CYLINDER HEAD

REF. NO.	PART NO.	DESCRIPTION	B2S2					REMARKS
1	BK6–E1102–00	CYLINDER HEAD ASSY	1					
2	2DP–E1133–10	.GUIDE, VALVE 1	4					
3	90340–12813	.PLUG, STRAIGHT SCREW	1					
4	95022–06010	BOLT, FLANGE	1					
5	90430–06014	GASKET	1					
6	95612–08618	BOLT, STUD	2					
7	BK6–E1191–00	COVER, CYLINDER HEAD 1	1					
8	BK6–E1165–00	PLATE, BREATHER	1					
9	BK6–E1169–00	GASKET, BREATHER COVER	1					
10	90149–05801	SCREW	4					
11	95022–06030	BOLT, FLANGE	4					
12	99530–08012	PIN, DOWEL	2					
13	BK6–E132G–00	ROD 1	1					
14	93102–08800	OIL SEAL	1					
15	B3F–E1193–00	GASKET, HEAD COVER 1	1					
16	BK6–E1361–00	BOLT, CYLINDER HOLDING 1	2					
17	BK6–E1362–00	BOLT, CYLINDER HOLDING 2	2					
18	90201–08859	WASHER, PLATE	4					
19	94700–00439	PLUG, SPARK (NGK MR8E-9)	1					
20	2DP–E1181–00	GASKET, CYLINDER HEAD 1	1					
21	91810–14809	PIN, DOWEL	2					
22	91810–14809	PIN, DOWEL	2					
23	90110–06378	BOLT, HEXAGON SOCKET HEAD	2					
24	2DP–E1311–10	CYLINDER 1	1					
25	BK6–E1351–00	GASKET, CYLINDER	1					
26	95022–06010	BOLT, FLANGE	1					
27	90430–06014	GASKET	1					

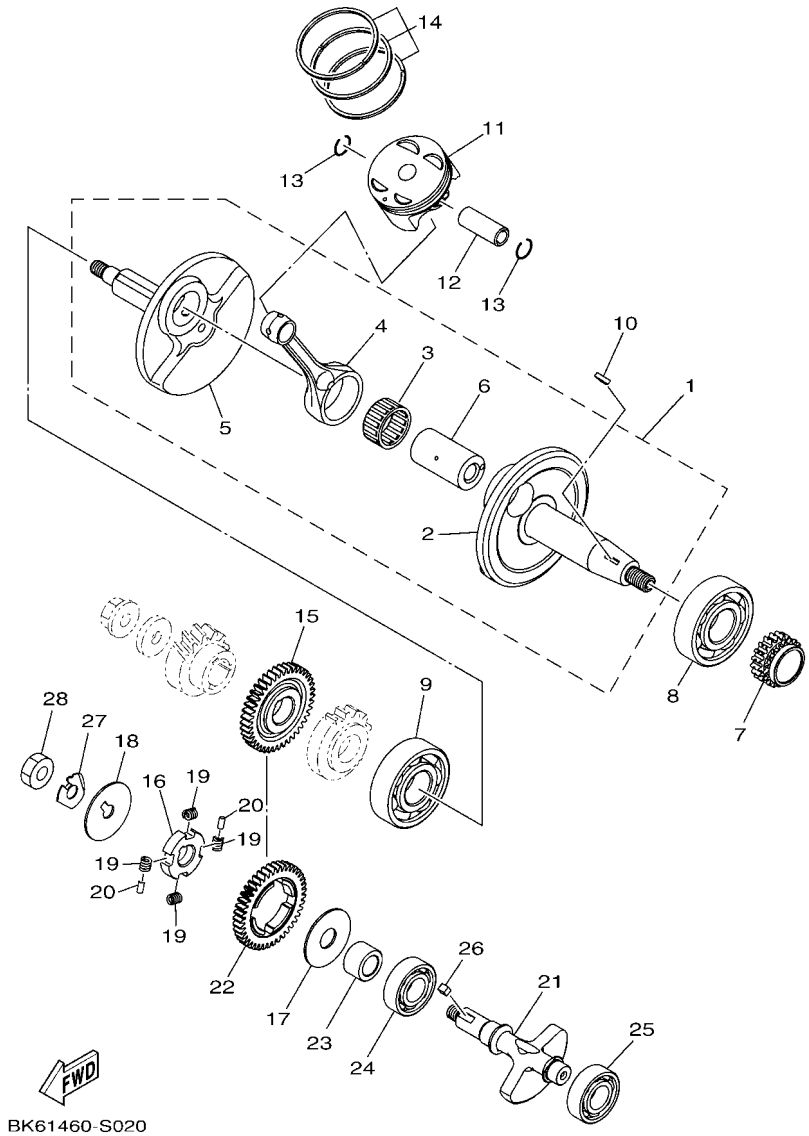

FIG. 2 CRANKSHAFT & PISTON

REF. NO.	PART NO.	DESCRIPTION	B2S2					REMARKS
1	BK6–E1400–00	CRANKSHAFT ASSY	1					
2	BK6–E1412–00	.CRANK 1	1					
3	93310–526YT	.BEARING	1					
4	BK6–E1651–00	.ROD, CONNECTING	1					
5	BK6–E1422–00	.CRANK 2	1					
6	BK6–E1681–00	.PIN, CRANK 1	1					
7	BK6–E1549–00	SPROCKET, CAM CHAIN	1					
8	93306–305X7	BEARING	1					
9	93306–305XV	BEARING	1					
10	90280–03017	KEY, WOODRUFF	1					
11	BK6–E1631–00	PISTON (STD)	1					
12	2DP–E1633–00	PIN, PISTON	1					
13	93450–16115	CIRCLIP	2					
14	BK6–E1603–00	PISTON RING SET (STD)	1					
15	BK6–E1536–00	GEAR, DRIVE	1					
16	21C–E1496–20	BOSS, BUFFER	1					
17	90201–15821	WASHER, PLATE	1					
18	90214–10800	WASHER, CLAW	1					
19	90501–16800	SPRING, COMPRESSION	4					
20	93604–08800	PIN, DOWEL	2					
21	BK7–E1454–00	WEIGHT 1	1					
22	BK6–E1531–00	GEAR, BALANCE WEIGHT	1					
23	90387–15810	COLLAR	1					
24	93306–203XK	BEARING	1					
25	93306–203XK	BEARING	1					
26	90282–05031	KEY, STRAIGHT	1					
27	90215–10803	WASHER, LOCK	1					

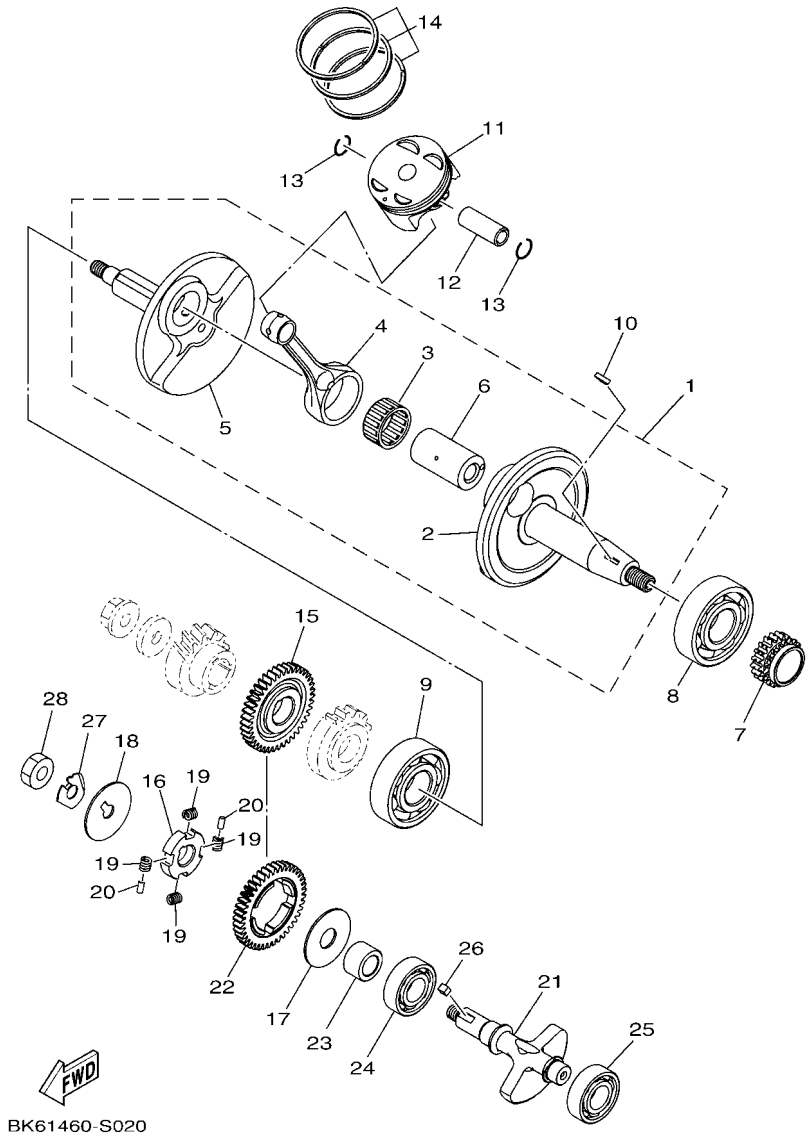

FIG. 2 CRANKSHAFT & PISTON

REF. NO.	PART NO.	DESCRIPTION	B2S2					REMARKS
28	90170–10012	NUT	1					

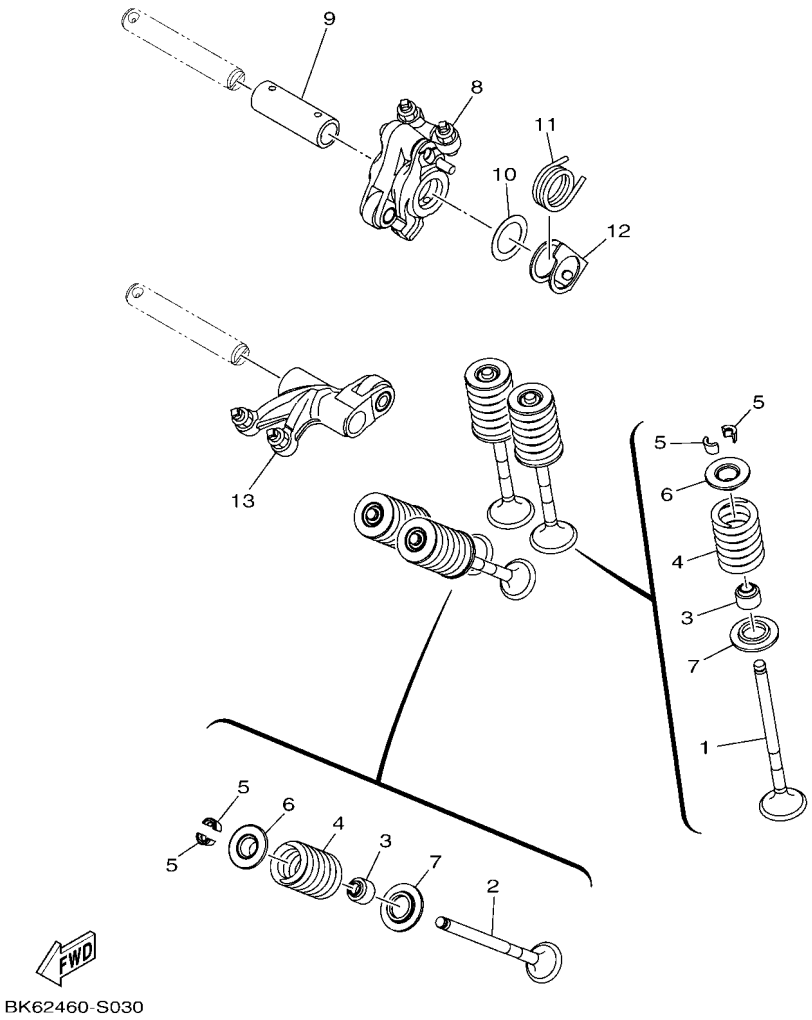

FIG. 3 VALVE

REF. NO.	PART NO.	DESCRIPTION	B2S2					REMARKS
1	BK6–E2111–00	VALVE, INTAKE	2					
2	BK6–E2121–00	VALVE, EXHAUST	2					
3	54P–E2119–00	SEAL, VALVE STEM	4					
4	B63–E2113–00	SPRING, VALVE INNER	4					
5	5TL–E2118–00	LOCK, VALVE SPRING RETAINER	8					
6	2DP–E2117–00	RETAINER, VALVE SPRING	4					
7	50C–E2126–00	SEAT, VALVE SPRING 2	4					
8	BK6–E2150–00	VALVE ROCKER ARM ASSY	1					
9	BK6–E2166–00	SHAFT, ROCKER 3	1					
10	BK6–E1557–00	WASHER 1	1					
11	BK6–E2226–00	SPRING, COIL	1					
12	BK6–E2279–00	PLATE	1					
13	BK6–E2160–00	VALVE ROCKER ARM ASSY 2	1					

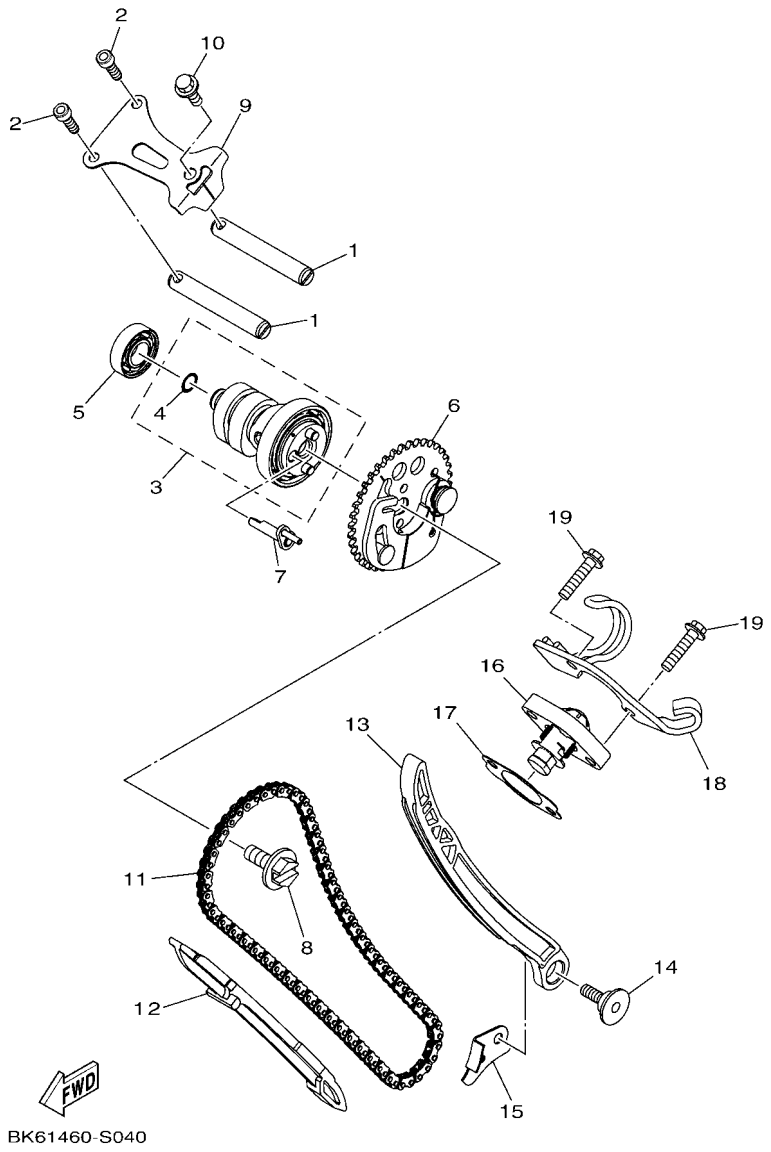

FIG. 4 CAMSHAFT & CHAIN

REF. NO.	PART NO.	DESCRIPTION	B2S2					REMARKS
1	21C–E2156–00	SHAFT, ROCKER 2	2					
2	91312–05016	BOLT, HEXAGON SOCKET HEAD	2					
3	BK6–E2170–01	CAMSHAFT ASSY 1	1					
4	93210–09806	.O-RING	1					
5	93306–001YJ	BEARING	1					
6	BK6–E2280–00	DECOMPRESSION ASSY	1					
7	BK6–E2288–00	CAM, DECOMPRESSION	1					
8	5YP–E2157–01	BOLT	1					
9	2DP–E111F–00	PLATE	1					
10	95022–06014	BOLT, FLANGE	1					
11	94568–J9096	CHAIN	1					
12	B65–E2231–00	GUIDE, STOPPER 1	1					
13	BK6–E2241–00	GUIDE, STOPPER 2	1					
14	54P–E2228–00	BOLT	1					
15	BK6–E2256–00	COVER, CHAIN	1					
16	2ND–E2210–20	TENSIONER ASSY, CAM CHAIN	1					
17	BK6–E2213–00	GASKET, TENSIONER CASE	1					
18	BK6–E5441–00	HOLDER, CLUTCH CABLE	1					
19	95022–06025	BOLT, FLANGE	2					

FIG. 5 WATER PUMP

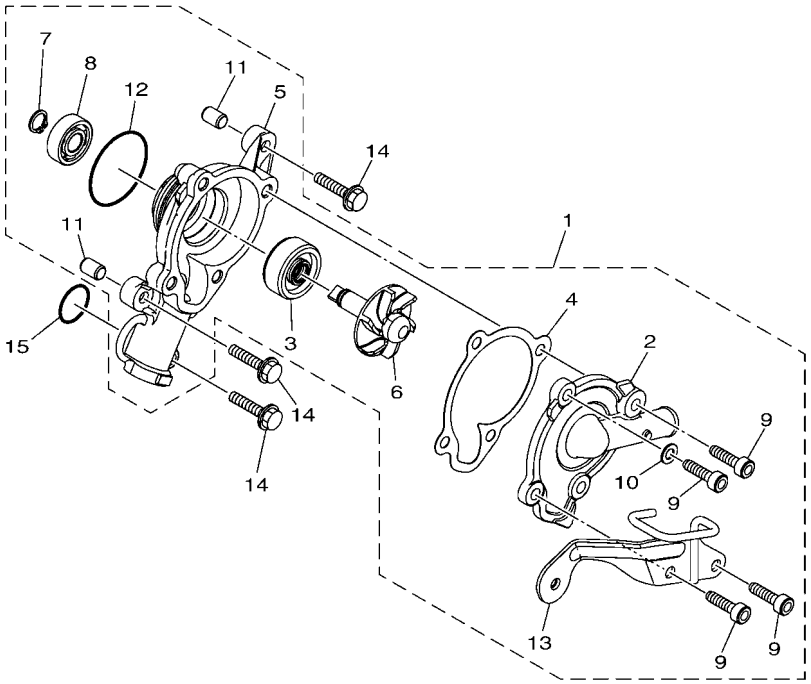

B0C4422-U050

REF. NO.	PART NO.	DESCRIPTION	B2S2					REMARKS
1	BK6–E2420–00	WATER PUMP ASSY	1					
2	BK7–E2422–00	.COVER, HOUSING	1					
3	93103–10801	.OIL SEAL	1					
4	2DP–E2428–00	.GASKET, HOUSING COVER 2	1					
5	BK7–E1185–00	.COVER, CYLINDER HEAD SIDE 3	1					
6	BK7–E2450–00	.IMPELLER SHAFT ASSY	1					
7	BK7–E2842–00	.CIRCLIP	1					
8	93306–000Y3	.BEARING	1					
9	BK7–E2615–00	.BOLT	4					
10	BK7–E2435–00	.GASKET	1					
11	BK7–E3516–00	.PIN, DOWEL	2					
12	93210–39803	.O-RING	1					
13	BK7–E2443–00	.STAY	1					
14	95022–06025	BOLT, FLANGE	3					
15	93210–19809	O-RING	1					

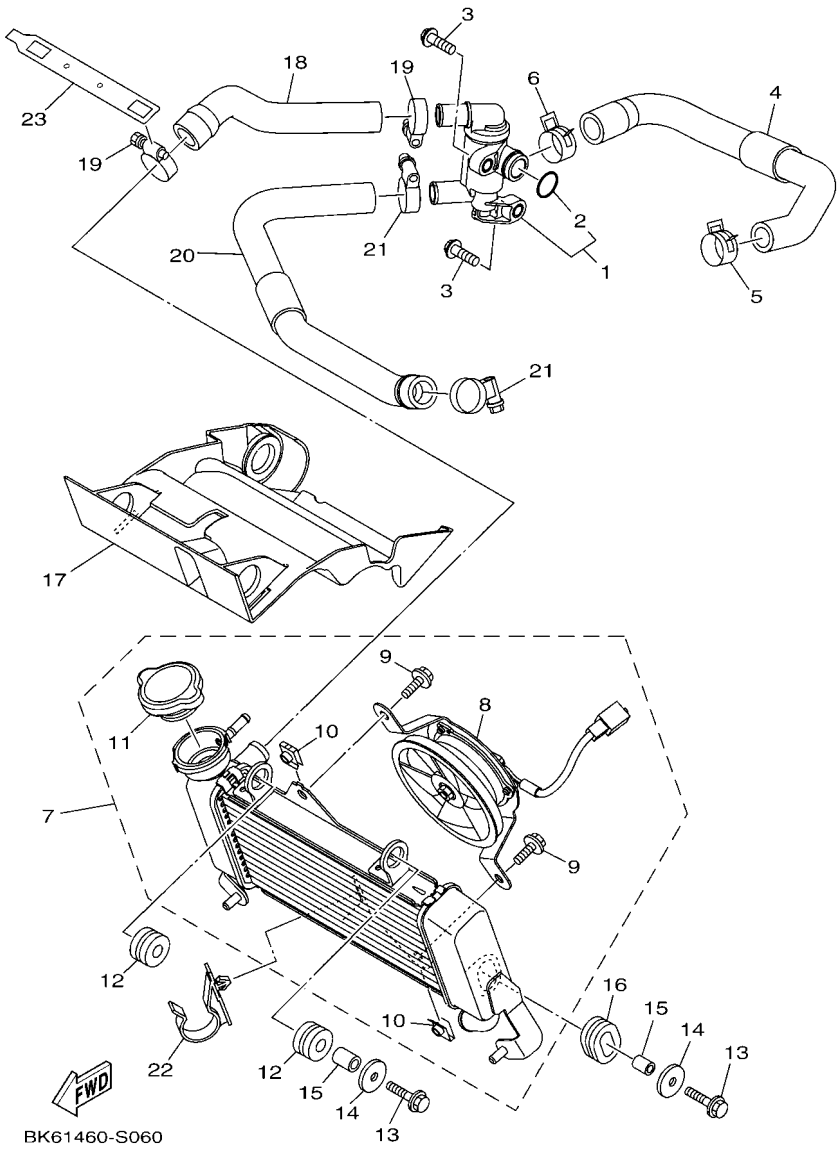

FIG. 6 RADIATOR & HOSE

REF. NO.	PART NO.	DESCRIPTION	B2S2					REMARKS
1	BK6–E2410–00	THERMOSTAT ASSY	1					
2	52S–12439–00	.O-RING	1					
3	95022–06020	BOLT, FLANGE	2					
4	BK6–E2483–00	PIPE 3	1					
5	90467–19803	CLIP	1					
6	90467–20806	CLIP	1					
7	BK6–E2460–00	RADIATOR ASSY	1					
8	BK6–E2405–00	.BLOWER ASSY	1					
9	5YP–E2675–00	.BOLT, BLOWER HOLDING	2					
10	5YP–E2671–00	.NUT 1	2					
11	5P0–E2590–00	.CONDUCTION ASSY	1					
12	90480–15363	GROMMET	2					
13	95D32–06025	BOLT, FLANGE DEEP RECESS	2					
14	90201–06880	WASHER, PLATE	2					
15	90387–064W3	COLLAR	2					
16	90480–01803	GROMMET	1					
17	BK6–E2467–00	COVER, RADIATOR	1					
18	BK6–E2481–00	PIPE 1	1					
19	90450–27806	HOSE CLAMP ASSY	2					
20	BK6–E2482–00	PIPE 2	1					
21	90450–27806	HOSE CLAMP ASSY	2					
22	3C1–F1338–00	CLAMP	1					
23	BK6–E246E–00	COVER 2	1					

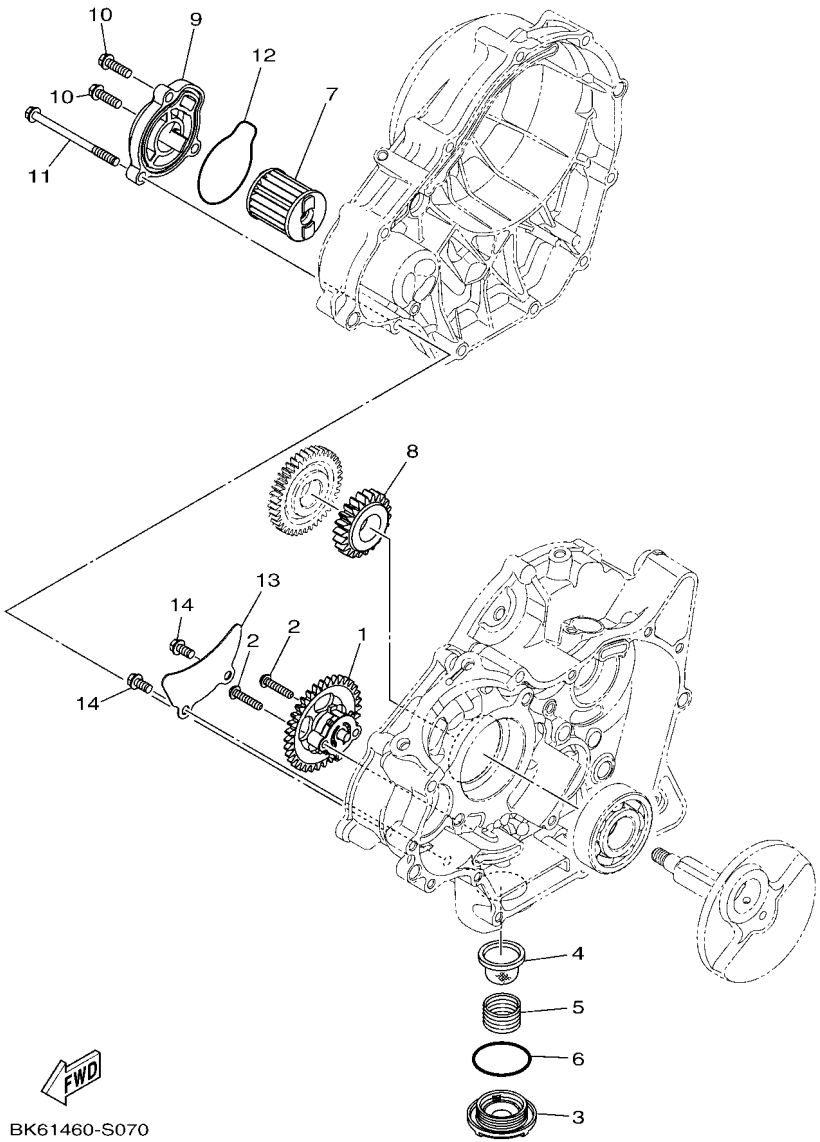

FIG. 7 OIL PUMP

REF. NO.	PART NO.	DESCRIPTION	B2S2					REMARKS
1	BK6–E3300–00	OIL PUMP ASSY	1					
2	90111–05808	BOLT,HEX. SOCKET BUTTON	2					
3	1S7–E5351–00	PLUG, DRAIN	1					
4	38B–E3411–00	STRAINER, OIL	1					
5	90501–18576	SPRING, COMPRESSION	1					
6	93210–34802	O-RING	1					
7	38B–E3440–00	ELEMENT ASSY, OIL CLEANER	1					
8	2PV–E3324–00	GEAR, PUMP DRIVE	1					
9	2PK–E3447–00	COVER, OIL ELEMENT	1					
10	95022–06020	BOLT, FLANGE	2					
11	95022–06080	BOLT, FLANGE	1					
12	93210–54805	O-RING	1					
13	3C1–E3327–00	COVER, PUMP GEAR	1					
14	95022–06012	BOLT, FLANGE	2					

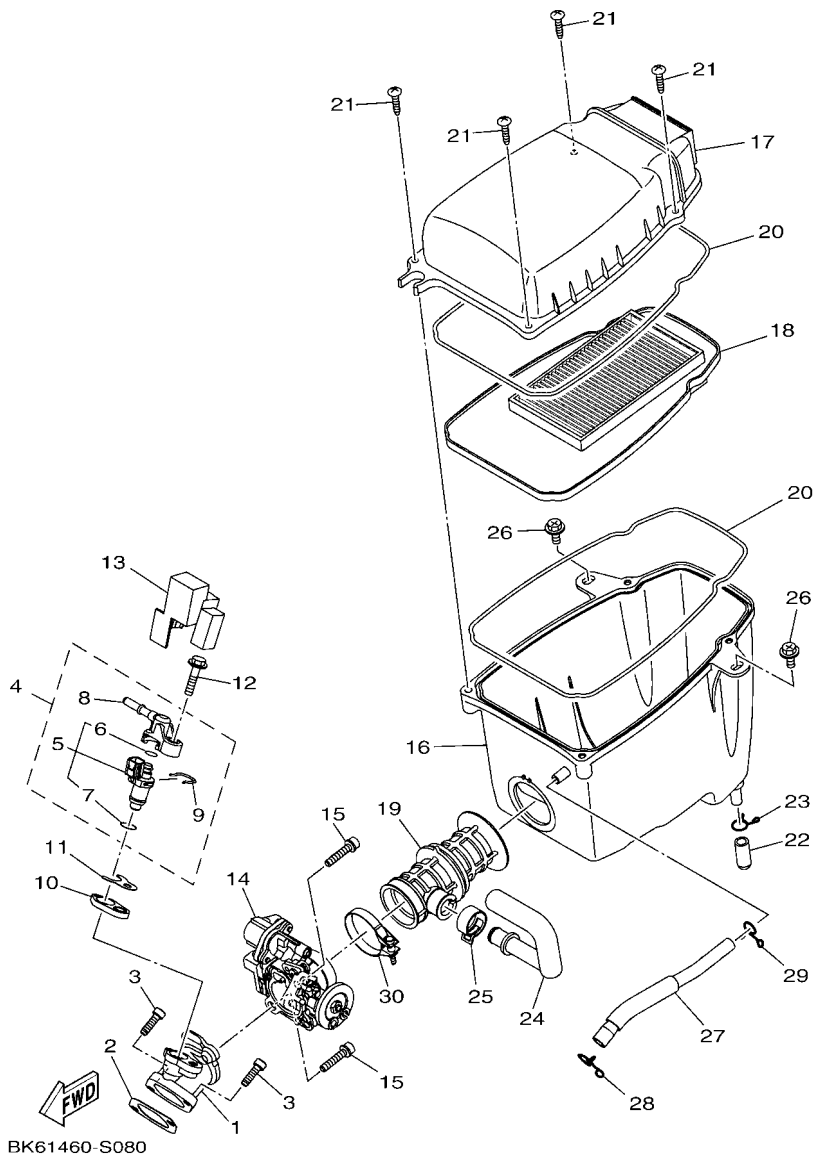

FIG. 8 INTAKE

REF. NO.	PART NO.	DESCRIPTION	B2S2					REMARKS
1	BK6–E3585–00	MANIFOLD	1					
2	BK6–E4199–00	GASKET	1					
3	91312–06020	BOLT, HEXAGON SOCKET HEAD	2					
4	BK6–E3770–00	INJECTOR ASSY	1					
5	BK6–E3761–00	.INJECTOR	1					
6	54P–E4147–00	..O-RING	1					
7	5CA–E4147–00	..O-RING	1					
8	54P–E3938–00	.PIPE	1					
9	54P–E4137–00	.CLIP	1					
10	2FB–E3556–00	GASKET, MANIFOLD	1					
11	BK6–E3557–00	GASKET	1					
12	95812–06030	BOLT, FLANGE	1					
13	BK6–E3767–00	CAP, INJECTOR	1					
14	BK6–E3750–00	THROTTLE BODY ASSY	1					
15	90110–06846	BOLT, HEXAGON SOCKET HEAD	2					
16	BK6–E4411–01	CASE, AIR CLEANER 1	1					
17	BK6–E4412–00	CAP, CLEANER CASE 1	1					
18	BK6–E4450–00	ELEMENT ASSY, AIR CLEANER	1					
19	BK6–E4453–00	JOINT, AIR CLEANER 1	1					
20	BK6–E4452–00	SEAL	2					
21	97707–50025	SCREW, TAPPING	4					
22	5TL–E443E–00	PIPE, DRAIN	1					
23	90467–12800	CLIP	1					
24	BK6–E441J–00	PIPE, SILENCER	1					
25	90467–20804	CLIP	1					
26	90119–06051	BOLT, WITH WASHER	2					
27	BK7–E1166–00	PIPE, BREATHER 1	1					

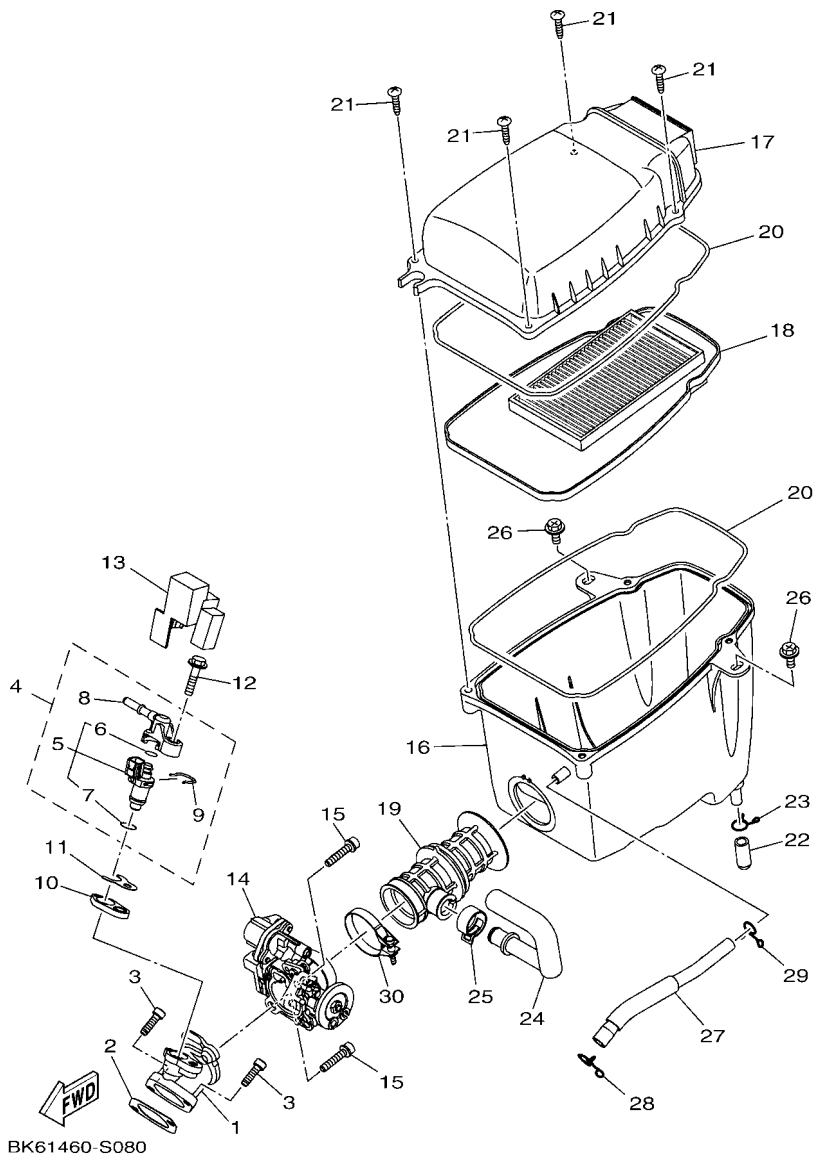

FIG. 8 INTAKE

REF. NO.	PART NO.	DESCRIPTION	B2S2					REMARKS
28	90467–12052	CLIP	1					
29	90467–11825	CLIP	1					
30	90450–43805	HOSE CLAMP ASSY	1					

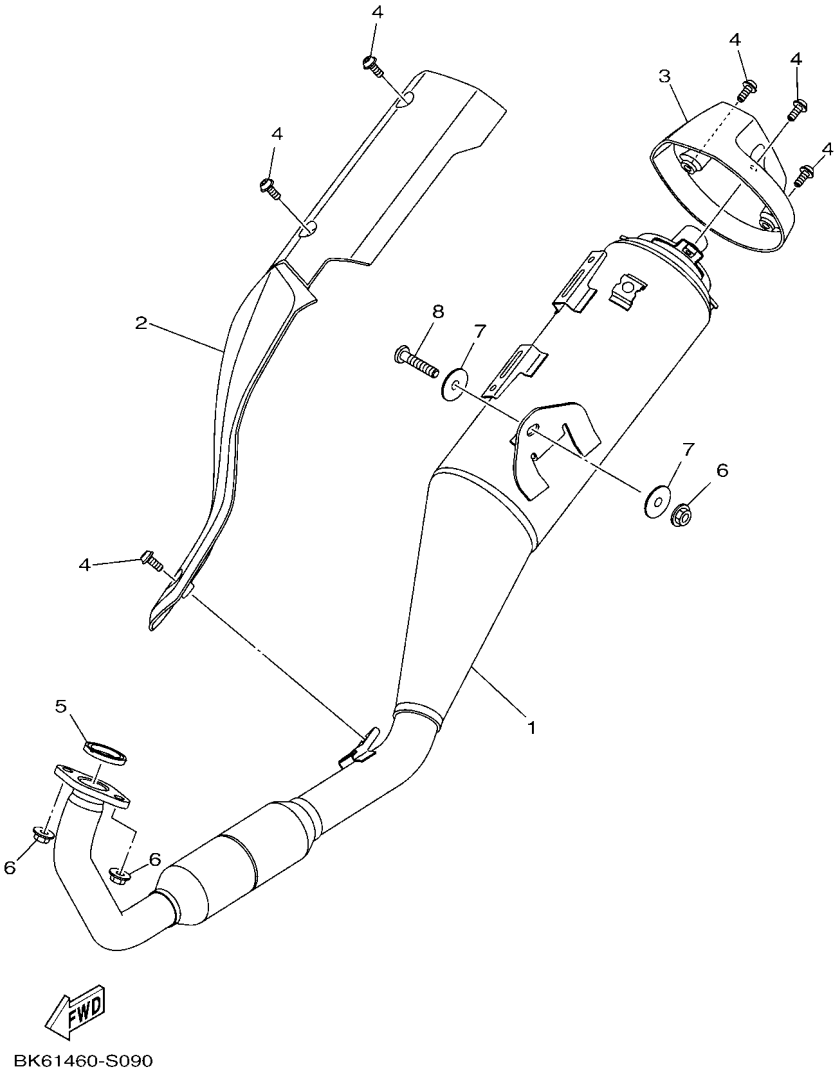

FIG. 9 EXHAUST

REF. NO.	PART NO.	DESCRIPTION	B2S2					REMARKS
1	BK6–E4703–10	MUFFLER COMP. 1	1					
2	BK6–E4718–00	PROTECTOR, MUFFLER 1	1					
3	BK6–E4799–00	CAP	1					
4	90111–06807	BOLT,HEX. SOCKET BUTTON	6					
5	BK7–E4613–00	GASKET, EXHAUST PIPE	1					
6	95702–08500	NUT, FLANGE	3					
7	90201–08612	WASHER, PLATE	2					
8	90149–08220	SCREW	1					

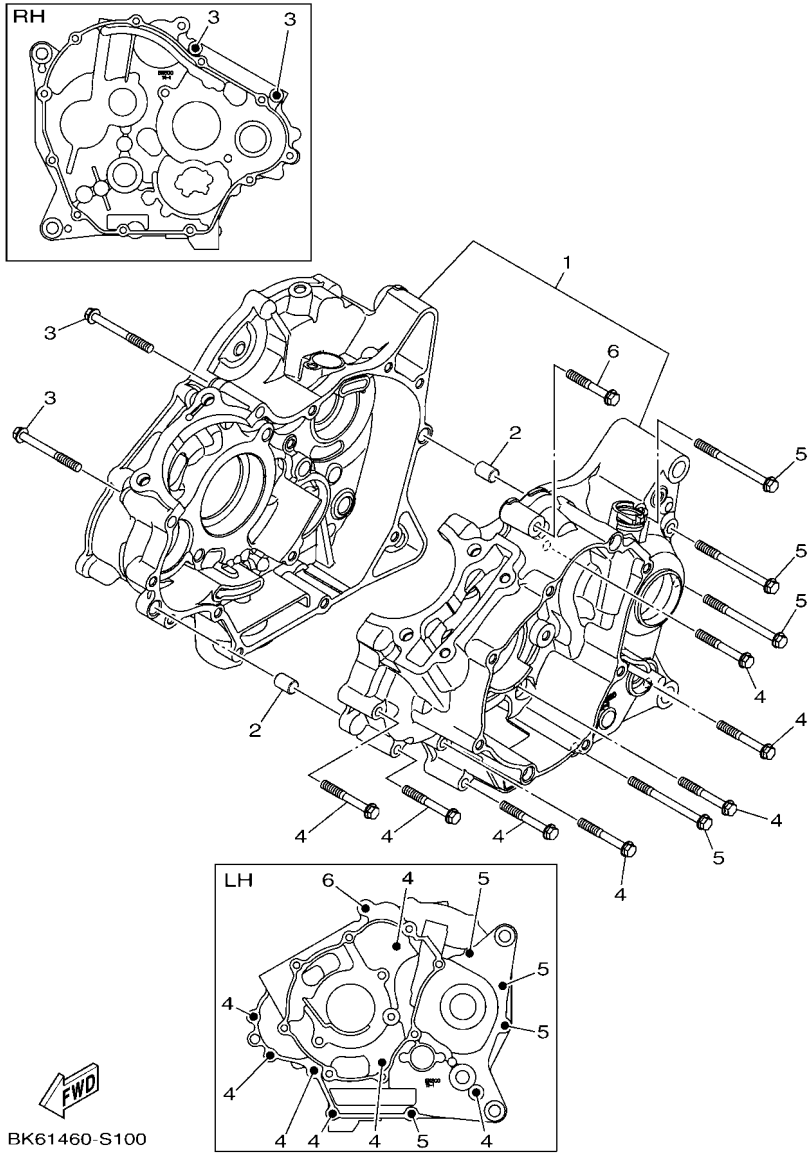

FIG. 10 CRANKCASE

REF. NO.	PART NO.	DESCRIPTION	B2S2					REMARKS
1	BK6–E5150–00	CRANKCASE ASSY	1					
2	91810–14809	PIN, DOWEL	2					
3	95022–06055	BOLT, FLANGE	2					
4	95022–06045	BOLT, FLANGE	7					
5	95022–06070	BOLT, FLANGE	4					
6	95022–06040	BOLT, FLANGE	1					

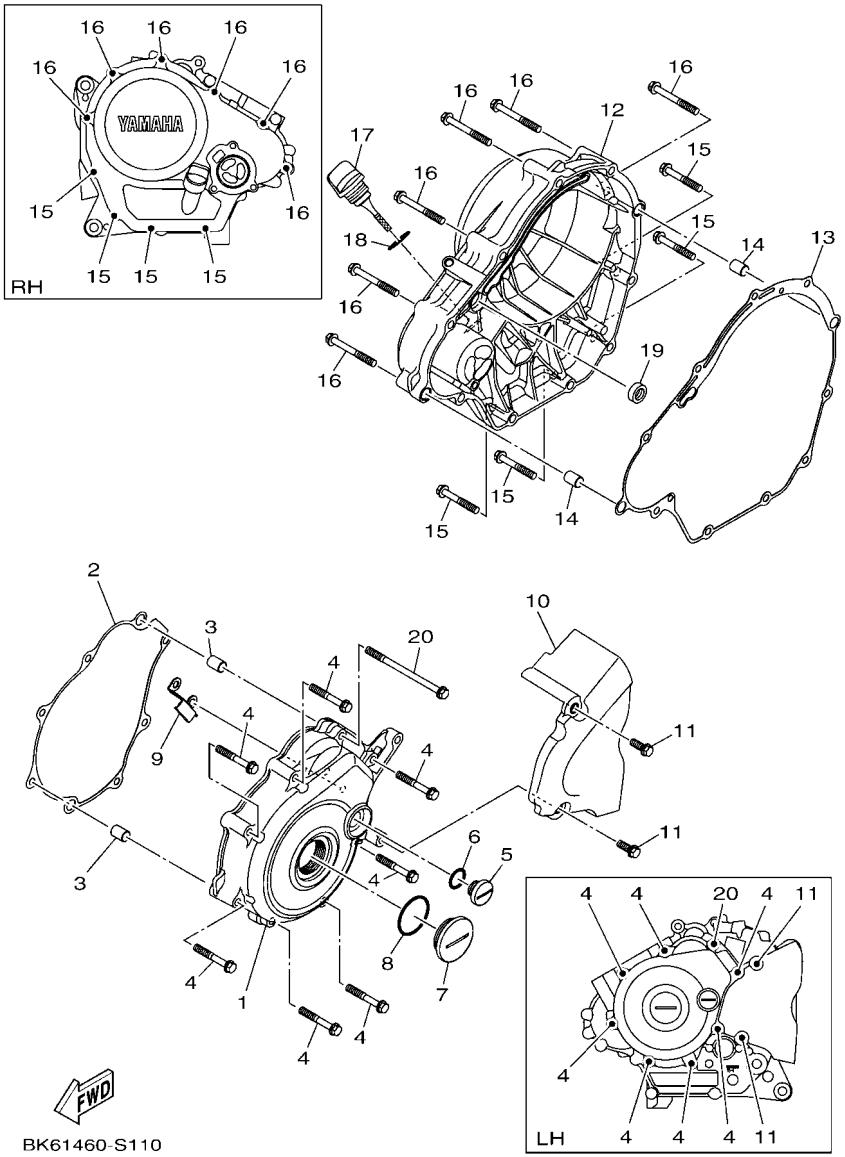

FIG. 11 CRANKCASE COVER 1

REF. NO.	PART NO.	DESCRIPTION	B2S2					REMARKS
1	BK6–E5411–00	COVER, CRANKCASE 1	1					
2	BK6–E5451–00	GASKET, CRANKCASE COVER 1	1					
3	91810–14809	PIN, DOWEL	2					
4	95022–06040	BOLT, FLANGE	7					
5	90340–14824	PLUG, STRAIGHT SCREW	1					
6	93210–148F8	O-RING	1					
7	90340–32823	PLUG, STRAIGHT SCREW	1					
8	93210–32816	O-RING	1					
9	2PV–E5113–00	PLATE	1					
10	BK6–E5418–00	COVER, CHAIN CASE	1					
11	95022–06016	BOLT, FLANGE	2					
12	BK6–E5421–00	COVER, CRANKCASE 2	1					
13	BK6–E5461–00	GASKET, CRANKCASE COVER 2	1					
14	91810–14809	PIN, DOWEL	2					
15	95022–06040	BOLT, FLANGE	4					
16	95022–06050	BOLT, FLANGE	6					
17	BK6–E5362–00	PLUG, OIL LEVEL	1					
18	93210–198F9	O-RING	1					
19	93101–10843	OIL SEAL	1					
20	95022–06090	BOLT, FLANGE	1					

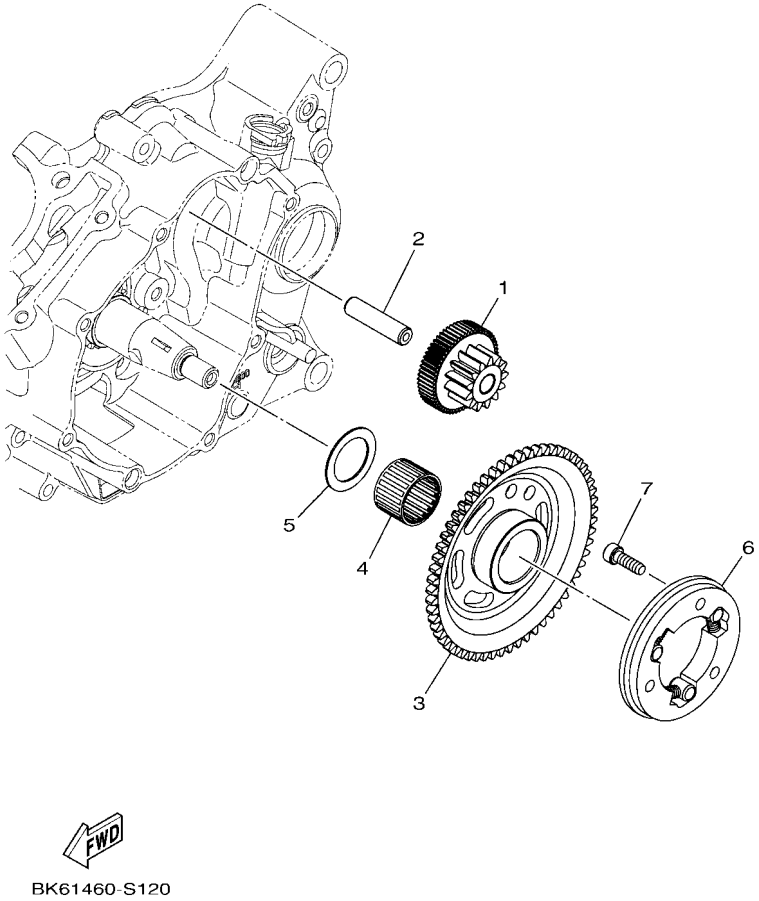

FIG. 12 STARTER CLUTCH

REF. NO.	PART NO.	DESCRIPTION	B2S2					REMARKS
1	B48–E5514–00	GEAR 2	1					
2	BK7–E5521–00	SHAFT 1	1					
3	2PV–E5524–10	WHEEL, STARTER	1					
4	93310–325YC	BEARING	1					
5	90201–25290	WASHER, PLATE	1					
6	2TP–E5580–00	STARTER CLUTCH OUTER ASSY	1					
7	90110–06873	BOLT, HEXAGON SOCKET HEAD	3					

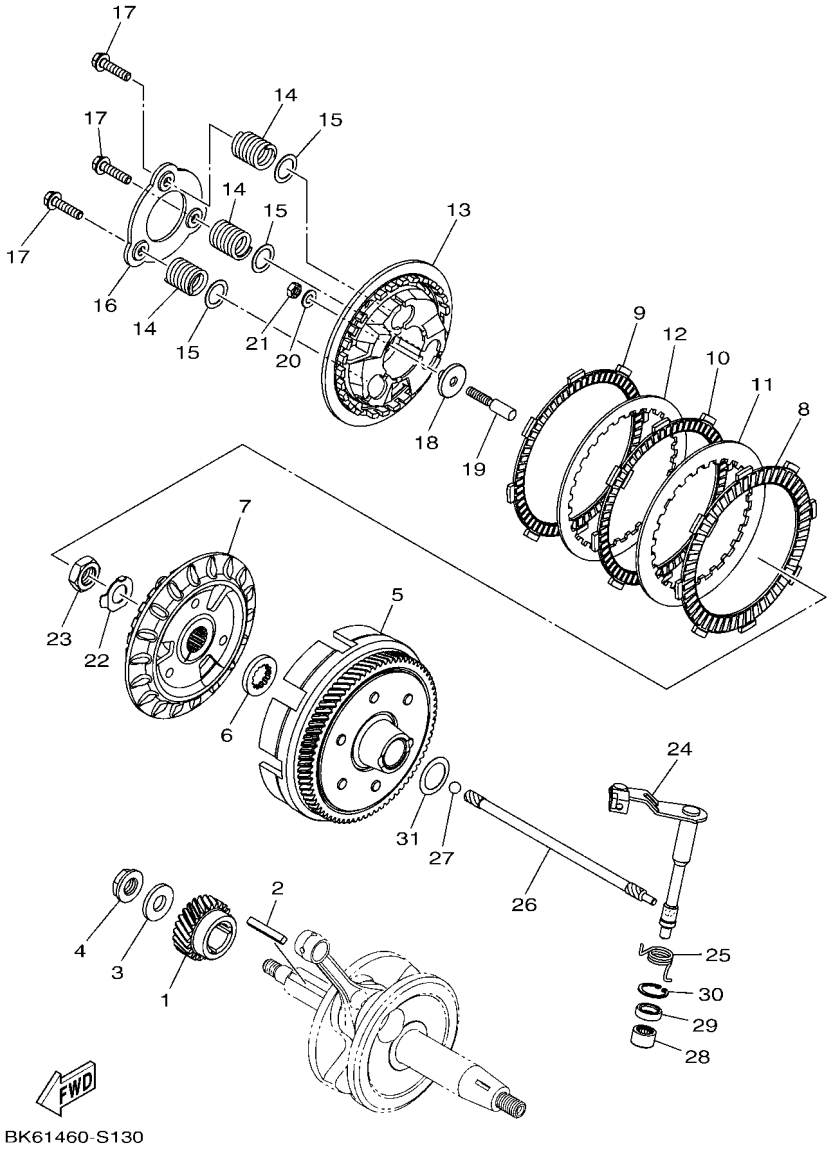

FIG. 13 CLUTCH

REF. NO.	PART NO.	DESCRIPTION	B2S2					REMARKS
1	3C1–E6111–00	GEAR, PRIMARY DRIVE	1					
2	38B–E6193–00	KEY, FEATHER	1					
3	90201–12019	WASHER, PLATE	1					
4	90179–12808	NUT	1					
5	BK6–E6150–00	PRIMARY DRIVEN GEAR COMP.	1					
6	2ND–E6154–00	PLATE, THRUST 1	1					
7	BK6–E6371–00	BOSS, CLUTCH	1					
8	2ND–E6321–00	PLATE, FRICTION	1					
9	BK6–E6331–00	PLATE, FRICTION 2	1					
10	BK6–E6321–00	PLATE, FRICTION	1					
11	BK6–E6325–00	PLATE, CLUTCH 2	1					
12	BK6–E6324–00	PLATE, CLUTCH 1	1					
13	BK6–E6351–00	PLATE, PRESSURE 1	1					
14	BK6–E6333–00	SPRING, CLUTCH 1	3					
15	BK6–E6774–00	WASHER	3					
16	BK6–E6352–00	PLATE, PRESSURE 2	1					
17	BK6–E6337–00	SCREW, SPRING	3					
18	3C1–E6358–00	PLATE, PUSH	1					
19	3C1–E6356–10	ROD, PUSH 1	1					
20	54B–E6144–00	WASHER	1					
21	3C1–E6344–00	NUT, ADJUSTING	1					
22	90215–14802	WASHER, LOCK	1					
23	90170–14801	NUT	1					
24	BK7–E6380–00	PUSH LEVER ASSY	1					
25	BK6–E6345–00	SPRING, RETURN	1					
26	1PA–E6357–00	ROD, PUSH 2	1					
27	93505–16844	BALL	1					UR

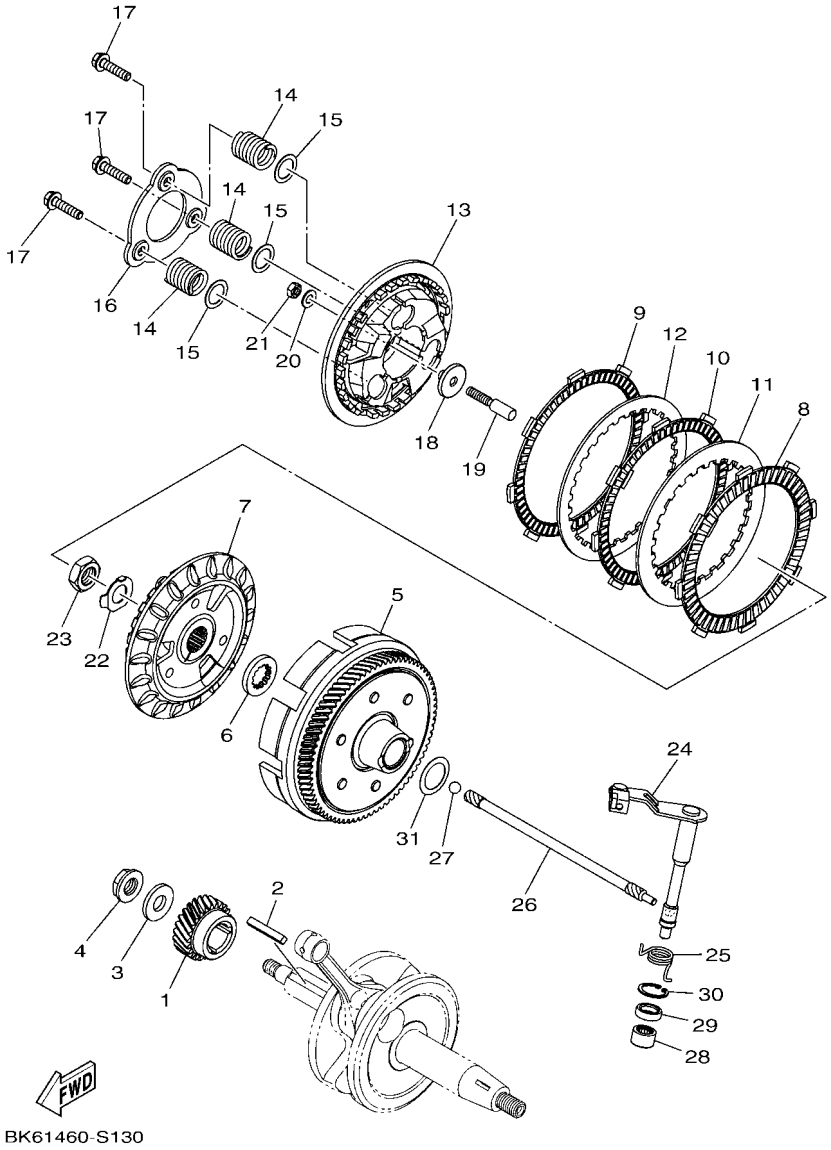

FIG. 13 CLUTCH

REF. NO.	PART NO.	DESCRIPTION	B2S2					REMARKS
27	93505–16845	BALL	1					UR
28	93315–112Y8	BEARING	1					
29	93102–12862	OIL SEAL	1					
30	99009–20500	CIRCLIP	1					
31	90208–20003	WASHER, CONICAL SPRING	1					

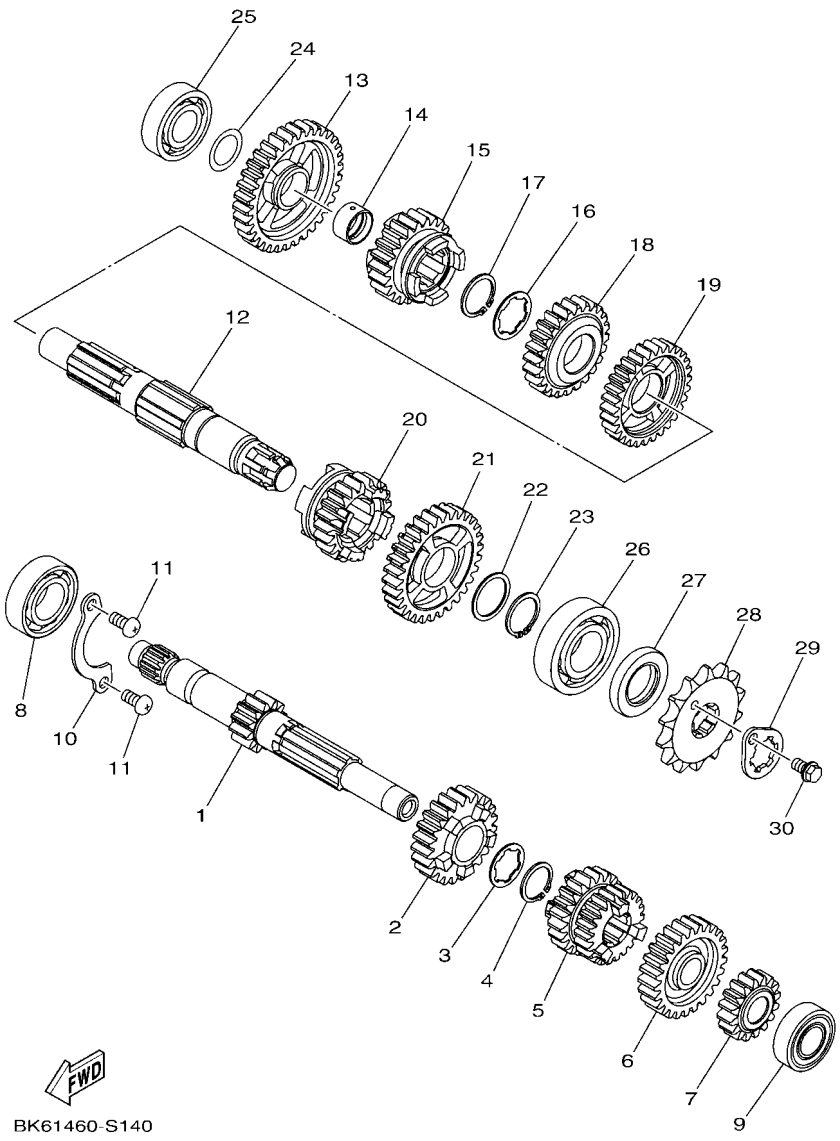

FIG. 14 TRANSMISSION

REF. NO.	PART NO.	DESCRIPTION	B2S2					REMARKS
1	BK6–E7411–00	AXLE, MAIN	1					
2	BK6–E7151–00	GEAR, 5TH PINION (23T)	1					
3	90209–17285	WASHER	1					
4	93410–20038	CIRCLIP	1					
5	5D7–E7131–00	GEAR, 3RD PINION (22T/21T)	1					
6	BK6–E7161–00	GEAR, 6TH PINION (25T)	1					
7	3C1–E7121–00	GEAR, 2ND PINION (16T)	1					
8	93306–054XF	BEARING	1					
9	93306–252YN	BEARING	1					
10	3C1–E7471–00	PLATE, COVER	1					
11	98512–06012	SCREW, PAN HEAD	2					
12	BK6–E7421–00	AXLE, DRIVE	1					
13	3C1–E7211–00	GEAR, 1ST WHEEL (34T)	1					
14	90387–17804	COLLAR	1					
15	BK6–E7251–00	GEAR, 5TH WHEEL (22T)	1					
16	90209–18208	WASHER	1					
17	93410–22039	CIRCLIP	1					
18	BK6–E7241–00	GEAR, 4TH WHEEL (24T)	1					
19	BK6–E7231–00	GEAR, 3RD WHEEL (30T)	1					
20	5D7–E7261–00	GEAR, 6TH WHEEL (21T)	1					
21	BK6–E7221–00	GEAR, 2ND WHEEL (30T)	1					
22	90201–22793	WASHER, PLATE	1					
23	93410–22039	CIRCLIP	1					
24	90201–173F4	WASHER, PLATE	1					
25	93306–253X2	BEARING	1					
26	93306–272YC	BEARING	1					
27	93102–22827	OIL SEAL	1					

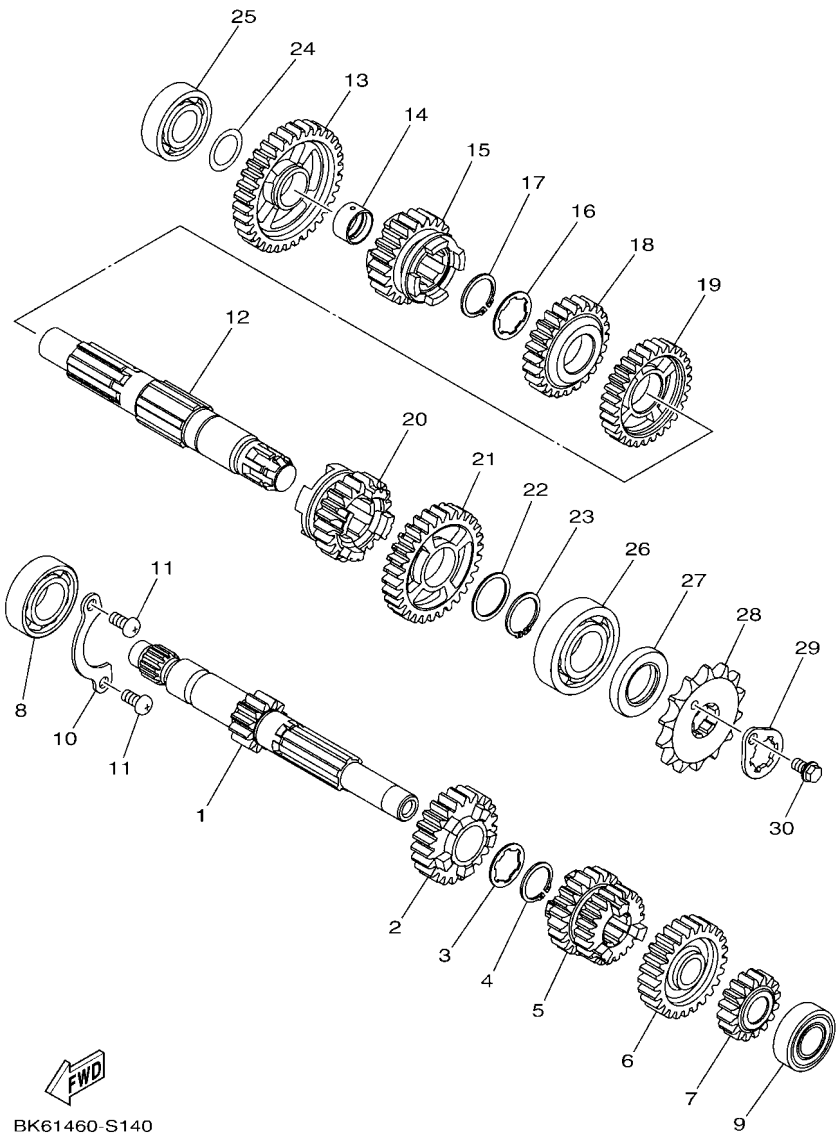

FIG. 14 TRANSMISSION

REF. NO.	PART NO.	DESCRIPTION	B2S2					REMARKS
28	93822–14800	SPROCKET, DRIVE (14T)	1					
29	1S7–E7456–00	HOLDER, SPROCKET	1					
30	95022–06010	BOLT, FLANGE	1					

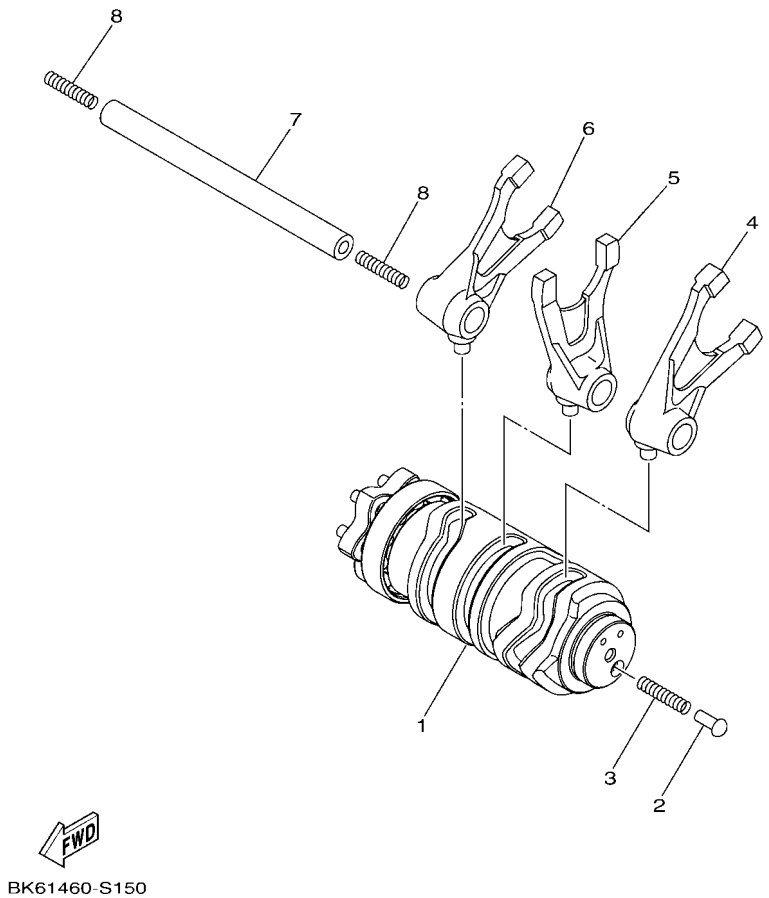

FIG. 15 SHIFT CAM & FORK

REF. NO.	PART NO.	DESCRIPTION	B2S2					REMARKS
1	BK6–E8540–00	SHIFT CAM ASSY	1					
2	5TP–E8542–00	POINT, NEUTRAL	1					
3	90501–06022	SPRING, COMPRESSION	1					
4	2ND–E8511–00	FORK, SHIFT 1	1					
5	2ND–E8512–00	FORK, SHIFT 2	1					
6	2ND–E8513–00	FORK, SHIFT 3	1					
7	1PA–E8531–00	BAR, SHIFT FORK GUIDE 1	1					
8	90501–06800	SPRING, COMPRESSION	2					

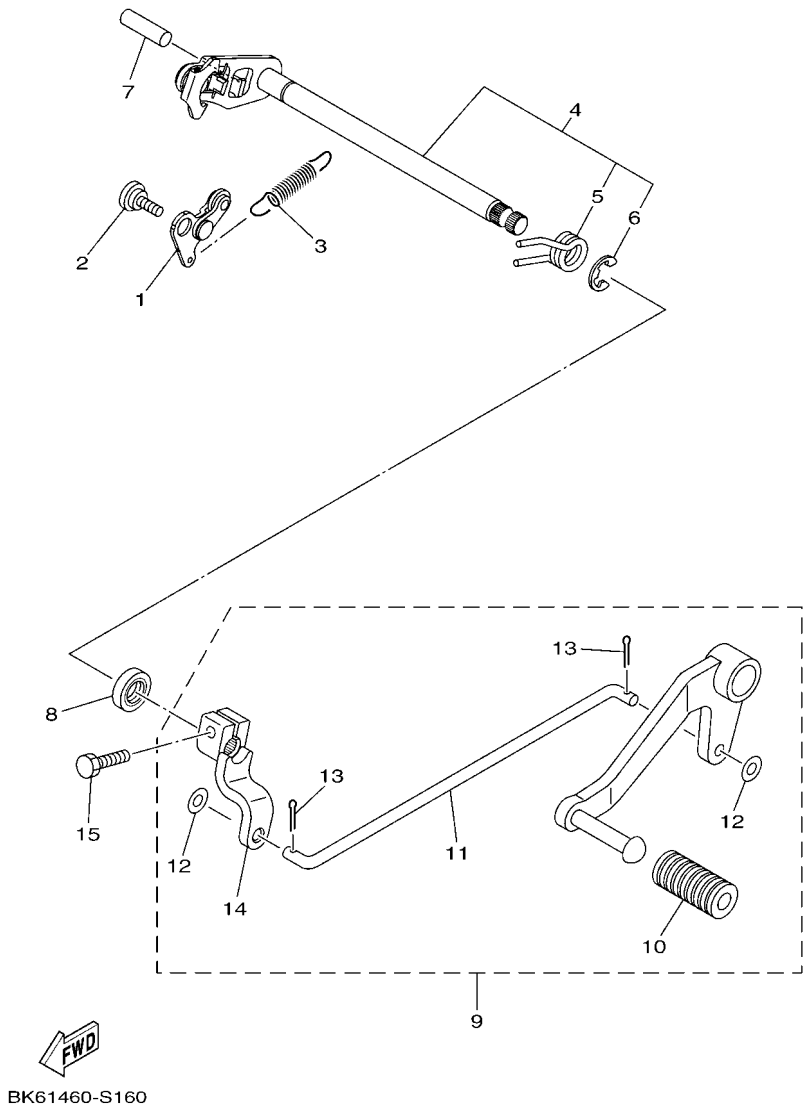

FIG. 16 SHIFT SHAFT

REF. NO.	PART NO.	DESCRIPTION	B2S2					REMARKS
1	BK6–E8140–00	STOPPER LEVER ASSY	1					
2	90109–06279	BOLT	1					
3	BK6–E8337–00	SPRING	1					
4	38B–E8101–00	SHIFT SHAFT ASSY	1					
5	90508–32837	.SPRING, TORSION	1					
6	99001–10600	.CIRCLIP	1					
7	93608–30839	PIN, DOWEL	1					
8	93102–12891	OIL SEAL	1					
9	BK7–E8110–00	SHIFT PEDAL ASSY	1					
10	20P–E8113–00	.COVER, SHIFT PEDAL	1					
11	BK7–E8115–00	.ROD, SHIFT	1					
12	92902–06200	.WASHER	2					
13	90252–18800	.PIN, COTTER	2					
14	BK7–E8112–00	.ARM, SHIFT	1					
15	97012–06020	BOLT	1					

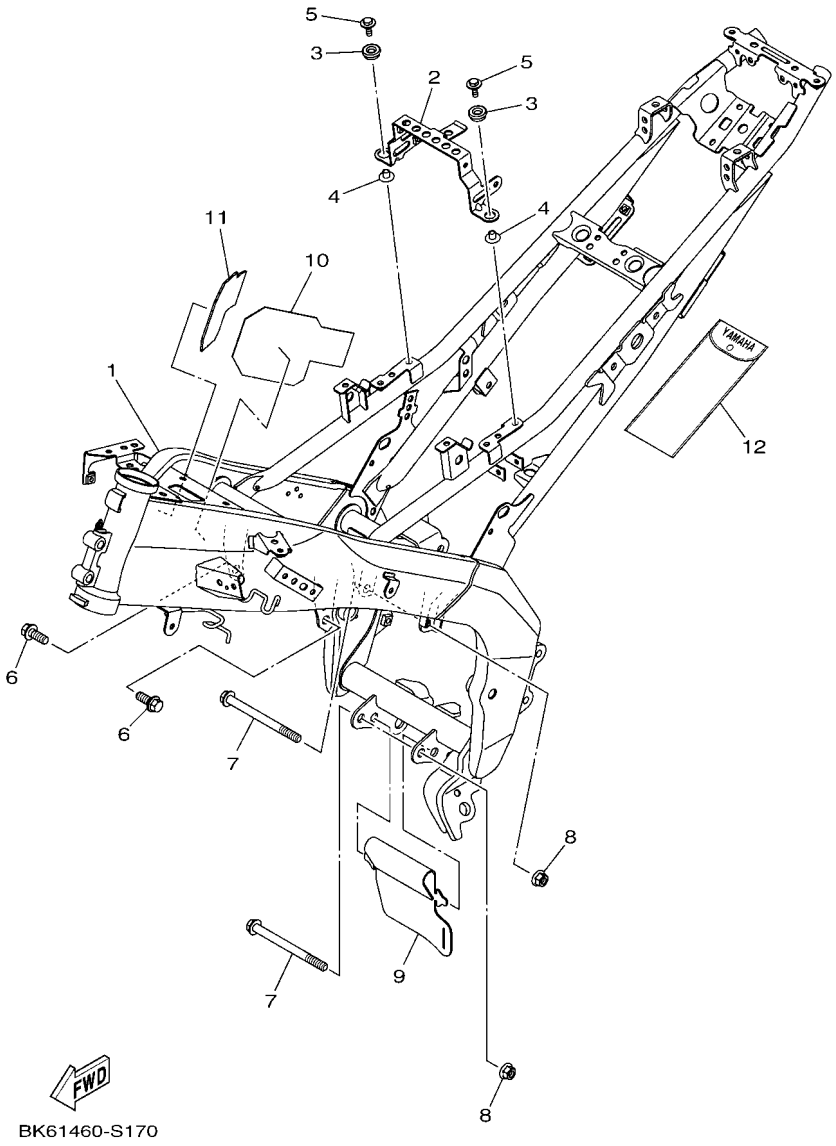

FIG. 17 FRAME

REF. NO.	PART NO.	DESCRIPTION	B2S2					REMARKS
1	BK6–F1110–12	FRAME COMP.	1					
2	BK6–F1946–00	BRACKET, SEAT FITTING	1					
3	90480–13567	GROMMET	2					
4	90387–068C5	COLLAR	2					
5	90119–06810	BOLT, WITH WASHER	2					
6	90105–108B7	BOLT, FLANGE	2					
7	90105–10886	BOLT, FLANGE	2					
8	90179–10805	NUT	2					
9	BK6–F2327–10	MUD GUARD 1	1					
10	BK6–F112C–00	DAMPER 2	1					
11	BK6–F112D–00	DAMPER 3	1					
12	BK6–F8100–00	TOOL KIT	1					

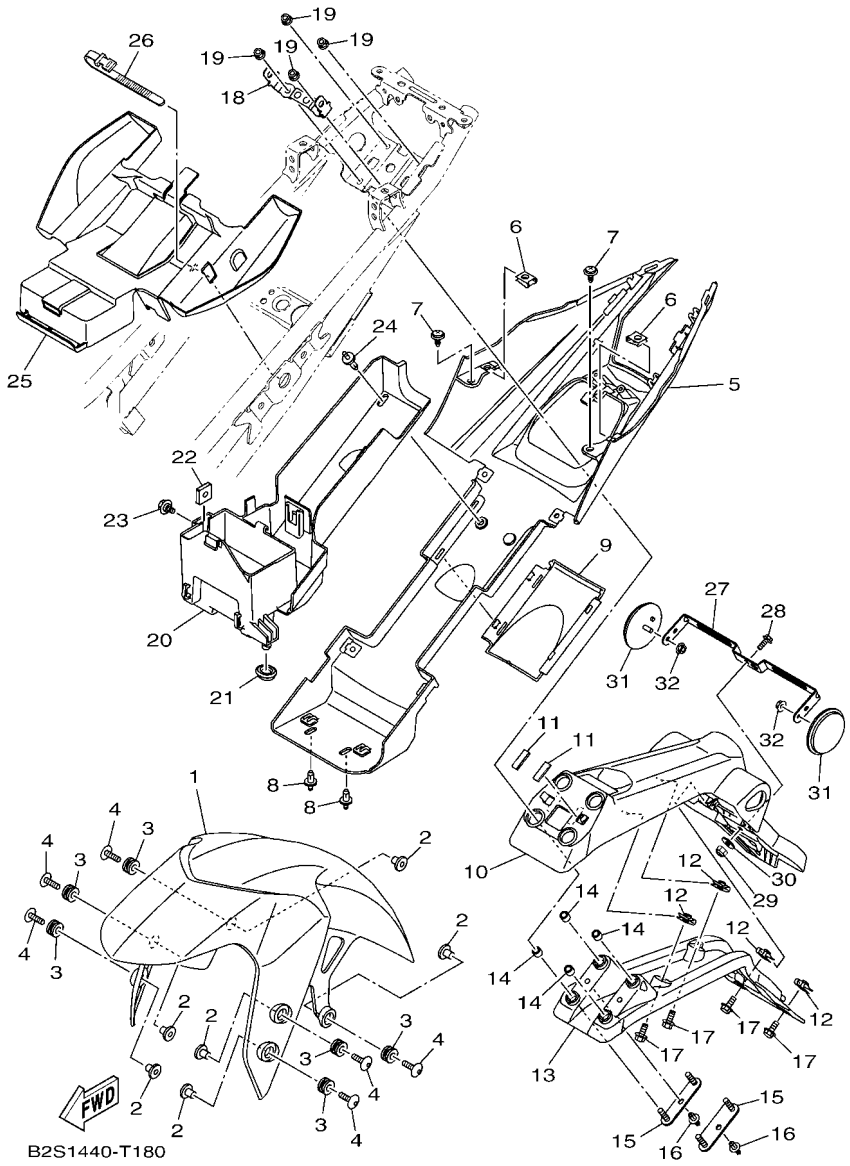

FIG. 18 FENDER

REF. NO.	PART NO.	DESCRIPTION	B2S2					REMARKS
1	BK6–F1511–00–P0	FENDER, FRONT	1					FOR DPBMC
	BK6–F1511–00–P4	FENDER, FRONT	1					SM12 FOR SM12,YM6
2	90387–06205	COLLAR	6					
3	90480–12805	GROMMET	6					
4	90111–06137	BOLT,HEX. SOCKET BUTTON	6					
5	BK6–F1611–00	FENDER, REAR	1					
6	90183–05807	NUT, SPRING	2					
7	90159–06817	SCREW, WITH WASHER	2					
8	90269–06816	RIVET	2					
9	BK6–F162R–00–P2	FENDER 2	1					UR FOR DPBMC
	BK6–F162R–00–P5	FENDER 2	1					UR FOR SM12
	BK6–F162R–00–P6	FENDER 2	1					UR MNM3 FOR YM6
10	BK6–F1629–01	GUARD, MUD	1					
11	28D–F834E–00	DAMPER 3	2					
12	90183–050A7	NUT, SPRING	4					
13	BK6–F1617–00	BRACKET, FENDER	1					
14	90387–066J9	COLLAR	4					
15	BK6–F1613–00	STAY, FENDER 1	2					
16	90269–06816	RIVET	2					
17	90119–05022	BOLT, WITH WASHER	4					
18	BK6–H1948–00	BRACKET	1					
19	95602–06200	NUT, SELF-LOCKING	4					
20	BK6–F160E–00	BOX	1					
21	90480–01558	GROMMET	1					
22	90173–06806	NUT, SQUARE	1					
23	90109–06202	BOLT	1					
24	90269–06816	RIVET	1					

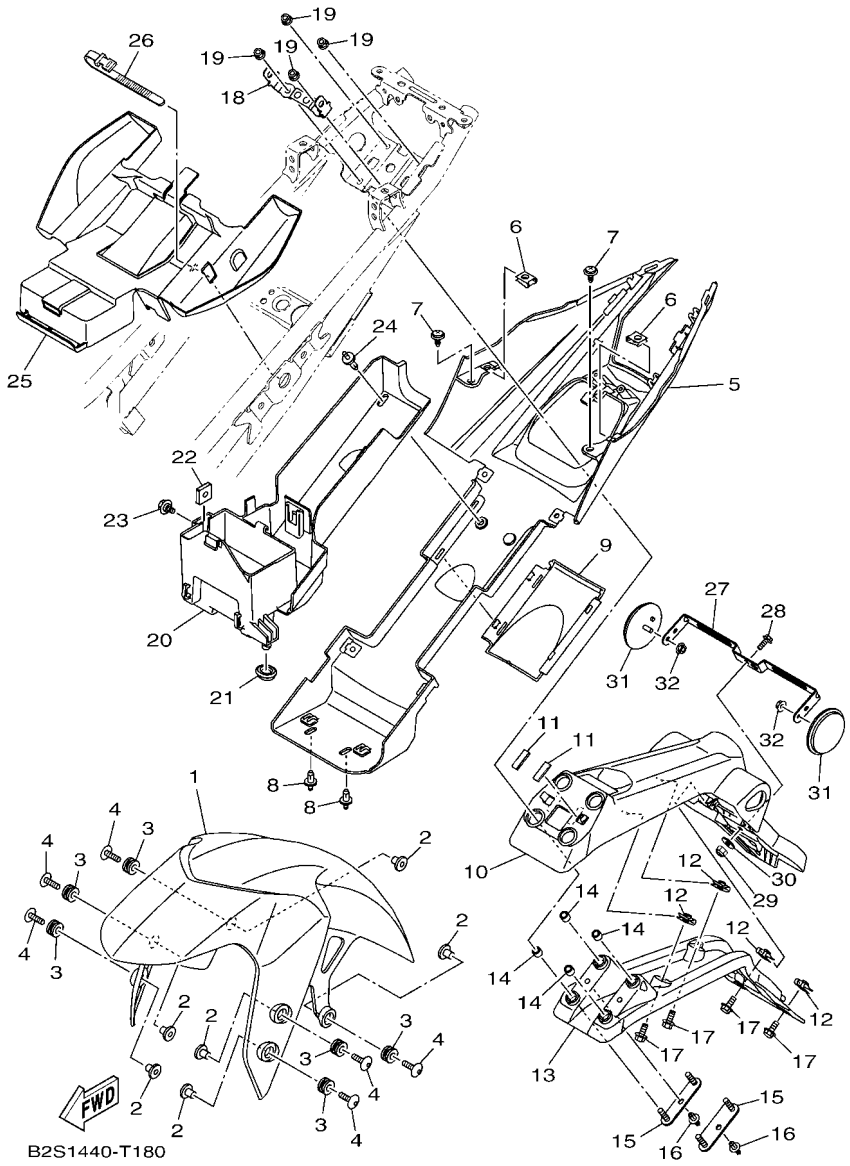

FIG. 18 FENDER

REF. NO.	PART NO.	DESCRIPTION	B2S2					REMARKS
25	BK6–F1653–00	BOX	1					
26	3AY–H3936–00	BAND, SWITCH CORD	1					
27	B2S–F1641–00	BRACKET, REFLECTOR	1					
28	95022–06014	BOLT, FLANGE	1					
29	95607–06100	NUT, SELF-LOCKING	1					
30	90201–06078	WASHER, PLATE	1					
31	2FC–H5111–00	REFLECTOR, 1	2					
32	95707–05500	NUT, FLANGE	2					

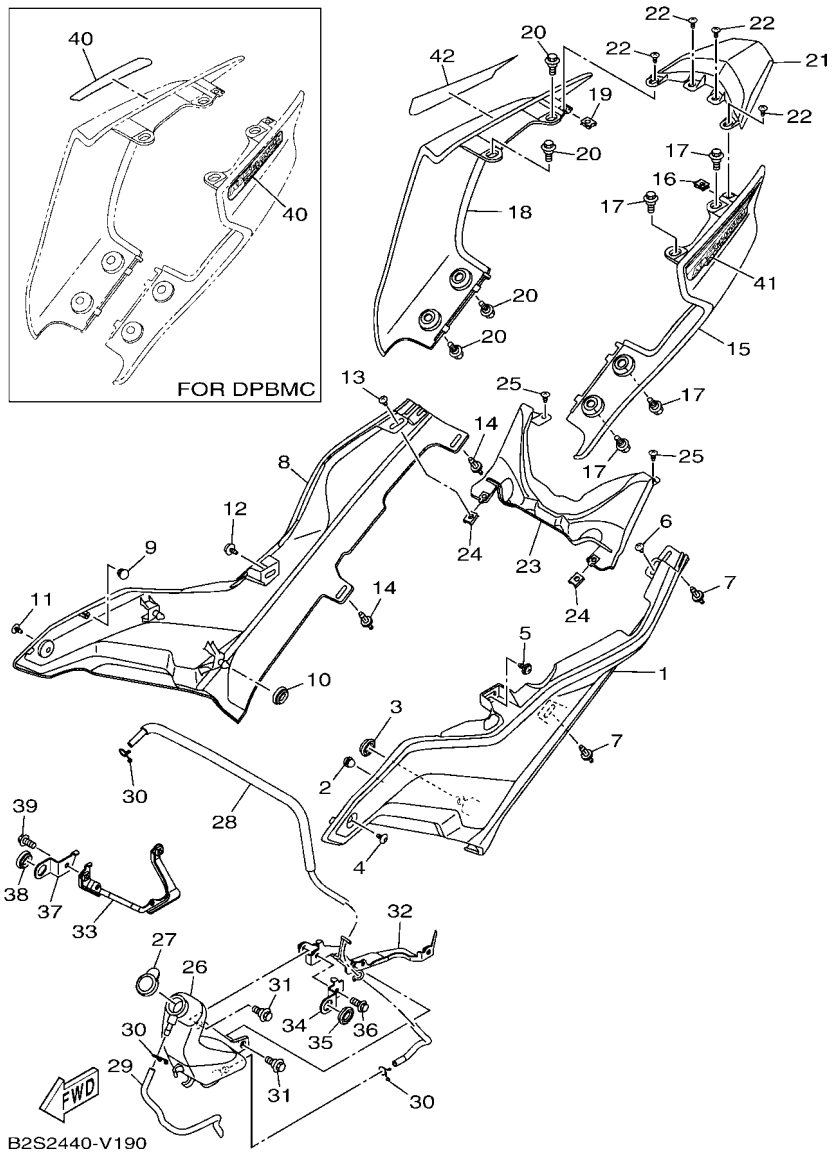

FIG. 19 SIDE COVER

REF. NO.	PART NO.	DESCRIPTION	B2S2					REMARKS
1	BK6–F1711–00	COVER, SIDE 1	1					
2	45P–F1717–00	DAMPER	1					
3	90480–01558	GROMMET	1					
4	90160–05812	SCREW, ROUND TAPPING	1					
5	90159–06817	SCREW, WITH WASHER	1					
6	97702–50012	SCREW, TAPPING	1					
7	90269–06816	RIVET	2					
8	BK6–F1721–00	COVER, SIDE 2	1					
9	45P–F1717–00	DAMPER	1					
10	90480–01558	GROMMET	1					
11	90160–05812	SCREW, ROUND TAPPING	1					
12	90159–06817	SCREW, WITH WASHER	1					
13	97702–50012	SCREW, TAPPING	1					
14	90269–06816	RIVET	2					
15	BK6–F1731–00–P2	COVER, SIDE 3	1					UR FOR DPBMC
	BK6–F1731–00–P5	COVER, SIDE 3	1					UR FOR SM12
	BK6–F1731–00–P6	COVER, SIDE 3	1					UR MNM3 FOR YM6
16	90183–05807	NUT, SPRING	1					
17	90109–068B2	BOLT	4					
18	BK6–F1741–00–P2	COVER, SIDE 4	1					UR FOR DPBMC
	BK6–F1741–00–P5	COVER, SIDE 4	1					UR FOR SM12
	BK6–F1741–00–P6	COVER, SIDE 4	1					UR MNM3 FOR YM6
19	90183–05807	NUT, SPRING	1					
20	90109–068B2	BOLT	4					
21	BK6–F171E–00	COVER, SIDE 5	1					
22	97707–50012	SCREW, TRUSS HEAD TAPPING	4					
23	BK6–F171X–00	COVER, SIDE 6	1					

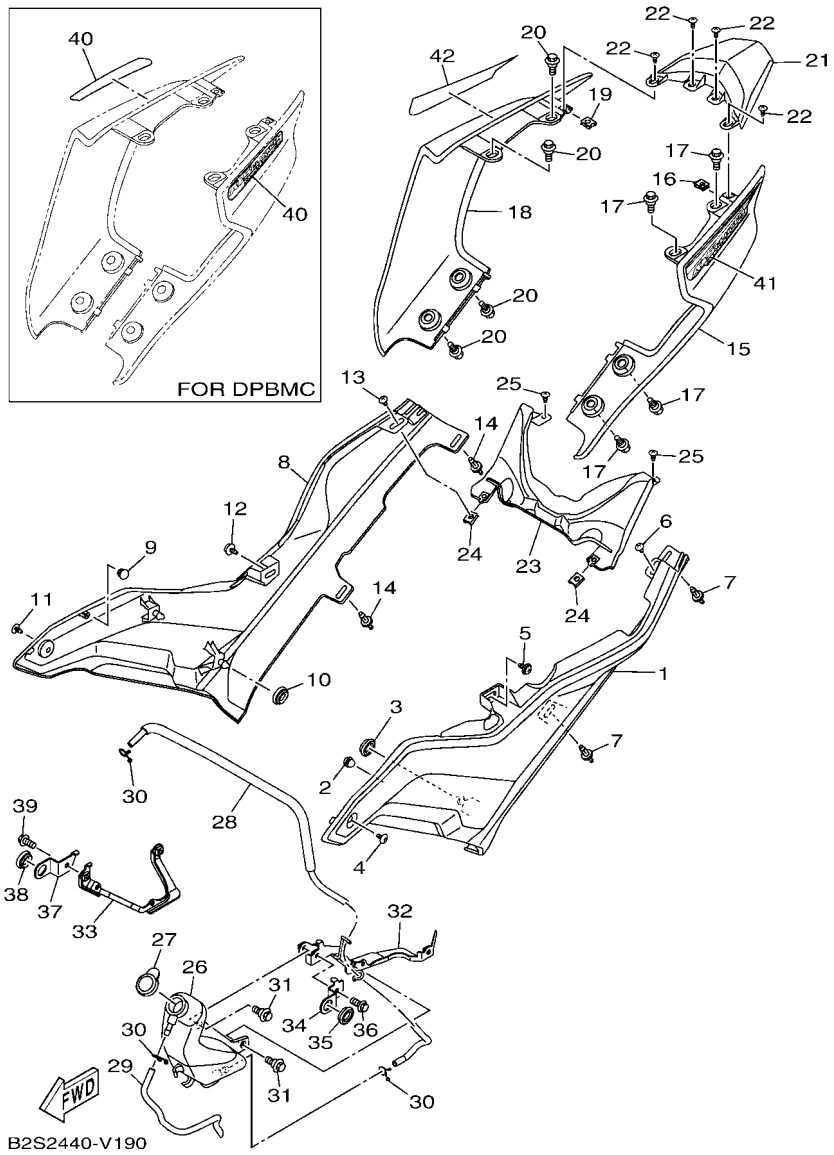

FIG. 19 SIDE COVER

REF. NO.	PART NO.	DESCRIPTION	B2S2					REMARKS
24	90183–05807	NUT, SPRING	2					
25	97702–50012	SCREW, TAPPING	2					
26	BK6–F1871–00	TANK, RECOVERY	1					
27	1S7–F1875–01	CAP	1					
28	BK6–F1817–00	PIPE 2	1					
29	BK6–F247A–00	HOSE 1	1					
30	90467–08003	CLIP	3					
31	90109–06220	BOLT	2					
32	BK6–F8283–00	BRACKET, POUCH	1					
33	BK6–F8284–00	BRACKET, UNDER	1					
34	BK6–F8417–00	PLATE	1					
35	90480–01558	GROMMET	1					
36	95022–06014	BOLT, FLANGE	1					
37	BK6–F841F–00	PLATE	1					
38	90480–01558	GROMMET	1					
39	95022–06014	BOLT, FLANGE	1					
40	B2S–F173E–30	GRAPHIC 1	2					FOR DPBMC
41	B2S–F173E–40	GRAPHIC 1	1					UR FOR SM12
	B2S–F173E–50	GRAPHIC 1	1					UR FOR YM6
42	B2S–F173F–30	GRAPHIC 2	1					UR FOR SM12
	B2S–F173F–40	GRAPHIC 2	1					UR FOR YM6

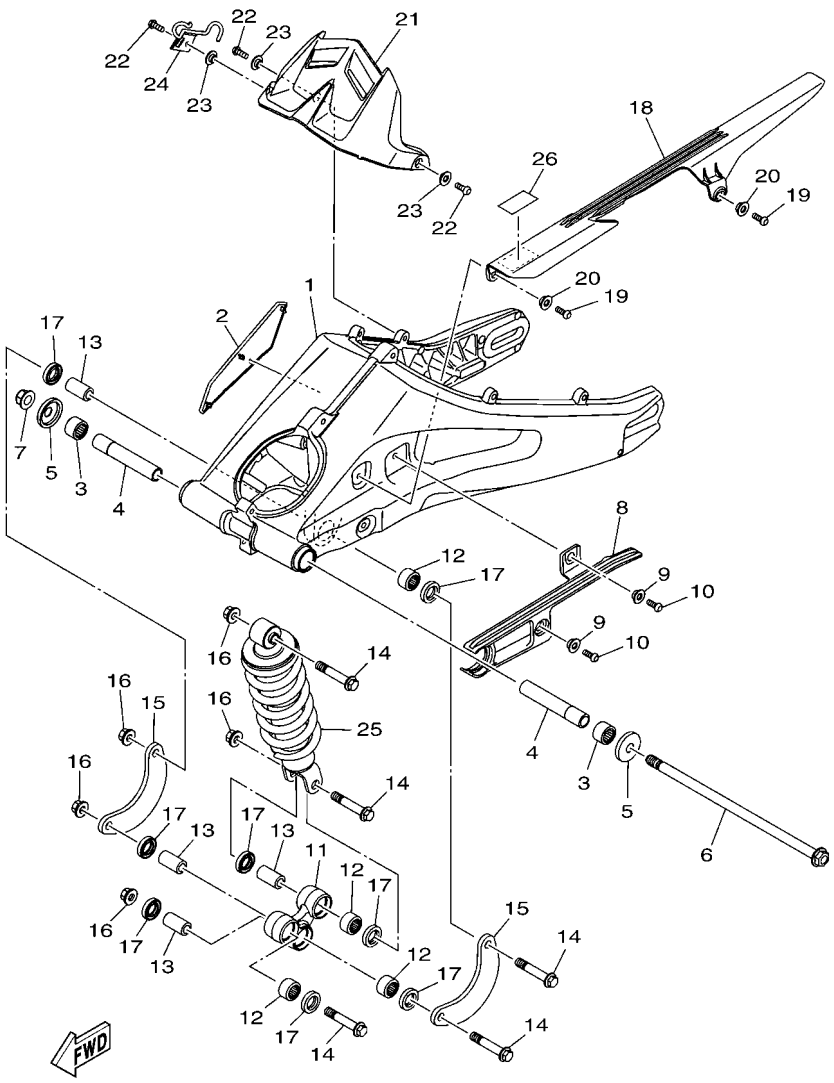

FIG. 20 REAR ARM & SUSPENSION

REF. NO.	PART NO.	DESCRIPTION	B2S2					REMARKS
1	BK6–F2110–00	REAR ARM COMP.	1					
2	BK6–F135F–00	COVER	1					
3	93317–218Y1	BEARING	2					
4	BK6–F2184–00	BUSH	2					
5	2PK–F2128–00	COVER, THRUST 1	2					
6	BK6–F2141–00	SHAFT, PIVOT	1					
7	95602–12200	NUT, SELF-LOCKING	1					
8	BK6–F2151–00	SEAL, GUARD	1					
9	90387–068S1	COLLAR	2					
10	92012–06016	BOLT, BUTTON HEAD	2					
11	2PK–F217A–00	ARM, RELAY	1					
12	93315–317Y1	BEARING	4					
13	90387–10814	COLLAR	4					
14	90105–10887	BOLT, FLANGE	5					
15	2PK–F217F–00	ROD, CONNECTING 1	2					
16	90179–10805	NUT	5					
17	93106–17801	OIL SEAL	8					
18	BK6–F2311–00	CASE, CHAIN	1					
19	92012–06016	BOLT, BUTTON HEAD	2					
20	90387–068S1	COLLAR	2					
21	BK6–F1650–00	REAR FENDER COMP.	1					
22	92012–06016	BOLT, BUTTON HEAD	3					
23	90387–068S1	COLLAR	3					
24	BK6–F587A–00	HOLDER, BRAKE HOSE 4	1					
25	BK6–F2210–00	SHOCK ABSORBER ASSY, REAR	1					
26	B92–F1668–00	LABEL, TIRE	1					

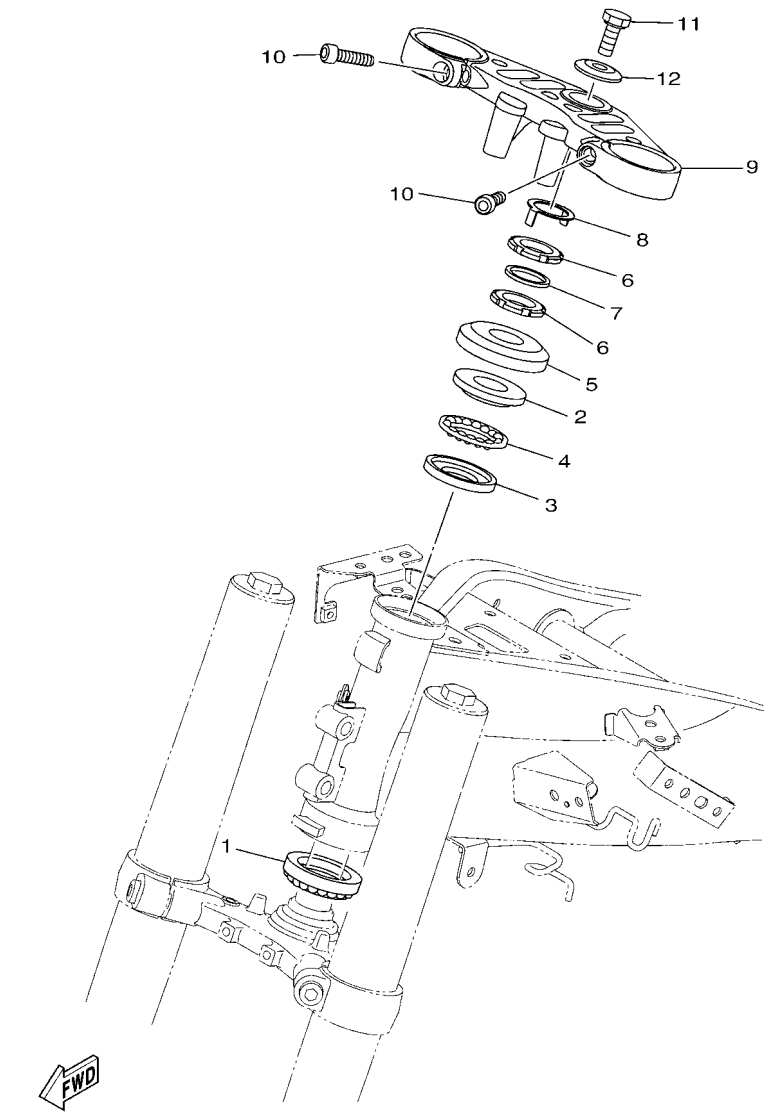

FIG. 21 STEERING

REF. NO.	PART NO.	DESCRIPTION	B2S2					REMARKS
1	5BP–F3873–01	BEARING, STEERING UPPER	1					
2	4FP–F3411–20	RACE, BALL 1	1					
3	4FP–F3412–10	RACE, BALL 2	1					
4	5VL–F341E–10	RETAINER, BALL BEARING	1					
5	5BP–F3416–10	COVER, BALL RACE 2	1					
6	90179–25615	NUT	2					
7	90202–26142	WASHER, PLATE	1					
8	1PA–F3418–00	WASHER, SPECIAL	1					
9	BK6–F3435–00	CROWN, HANDLE	1					
10	91337–08030	BOLT	2					
11	90105–10006	BOLT, FLANGE	1					
12	90209–10020	WASHER	1					

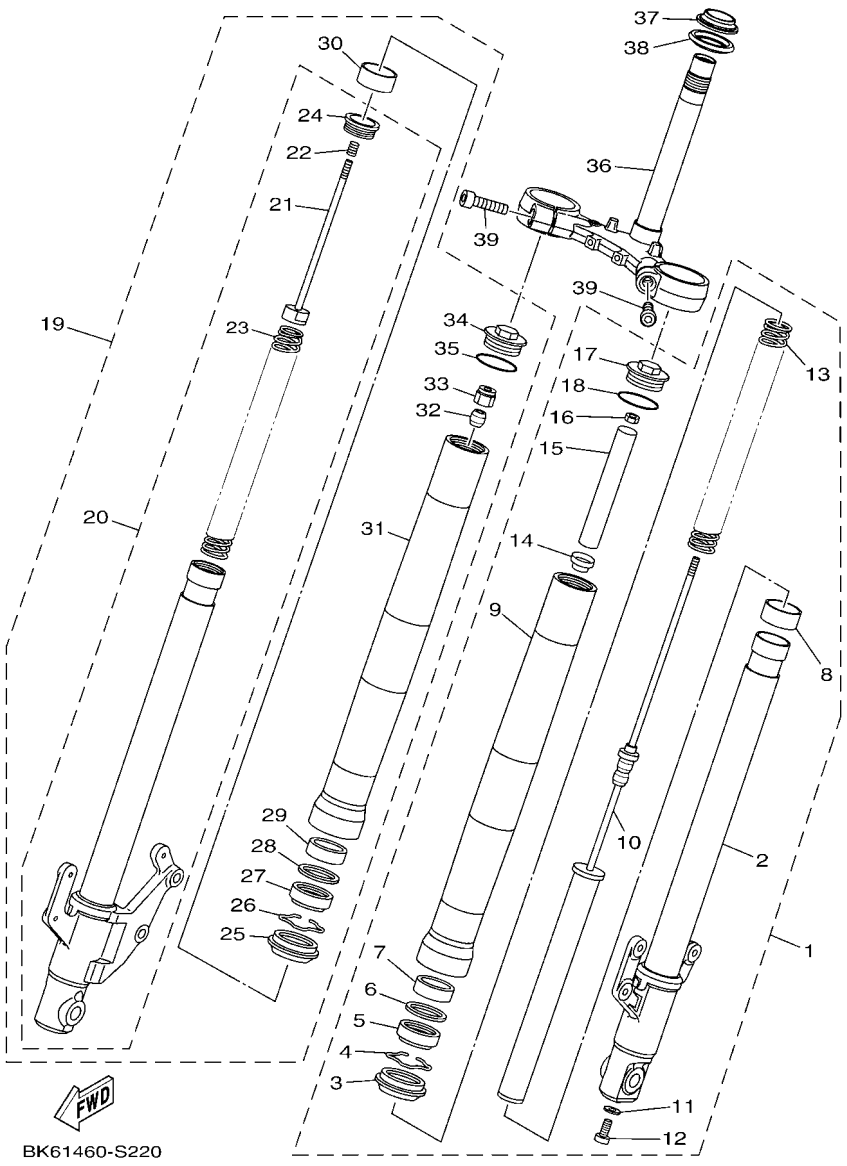

FIG. 22 FRONT FORK

REF. NO.	PART NO.	DESCRIPTION	B2S2					REMARKS
1	BK6–F3102–10	FRONT FORK ASSY (L.H)	1					
2	BK6–F3110–00	.INNER TUBE COMP.1	1					
3	B48–F3144–00	.SEAL, DUST	1					
4	3R4–23153–00	.RING, SNAP	1					
5	BK6–F3145–00	.OIL SEAL	1					
6	31A–23149–31	.WASHER, SPRING UPPER	1					
7	31A–23125–31	.METAL, SLIDE 1	1					
8	BK6–F3171–00	.PISTON, FRONT FORK	1					
9	BK6–F3126–10	.TUBE, OUTER (L.H)	1					
10	BK6–F3170–00	.CYLINDER COMP., FRONT FORK	1					
11	2BU–F3158–00	.GASKET	1					
12	31B–F3181–00	.BOLT, HEXAGON SOCKET HEAD	1					
13	BK6–F3141–00	.SPRING, FRONT FORK	1					
14	BK6–F3117–00	.GUIDE, SPRING	1					
15	BK6–F3118–00	.SPACER	1					
16	BK6–F3357–00	.NUT	1					
17	BK6–F3111–00	.BOLT, CAP	1					
18	4V4–23188–L0	.O-RING	1					
19	BK6–F3103–10	FRONT FORK ASSY (R.H)	1					
20	BK6–F3120–00	.INNER TUBE COMP.2	1					
21	BK6–F330G–00	..ROD COMP.	1					
22	3AH–22222–00	..SPRING 2	1					
23	BK6–F3141–00	..SPRING, FRONT FORK	1					
24	BK6–F319U–00	..CAP	1					
25	B48–F3144–00	.SEAL, DUST	1					
26	3R4–23153–00	.RING, SNAP	1					
27	BK6–F3145–00	.OIL SEAL	1					

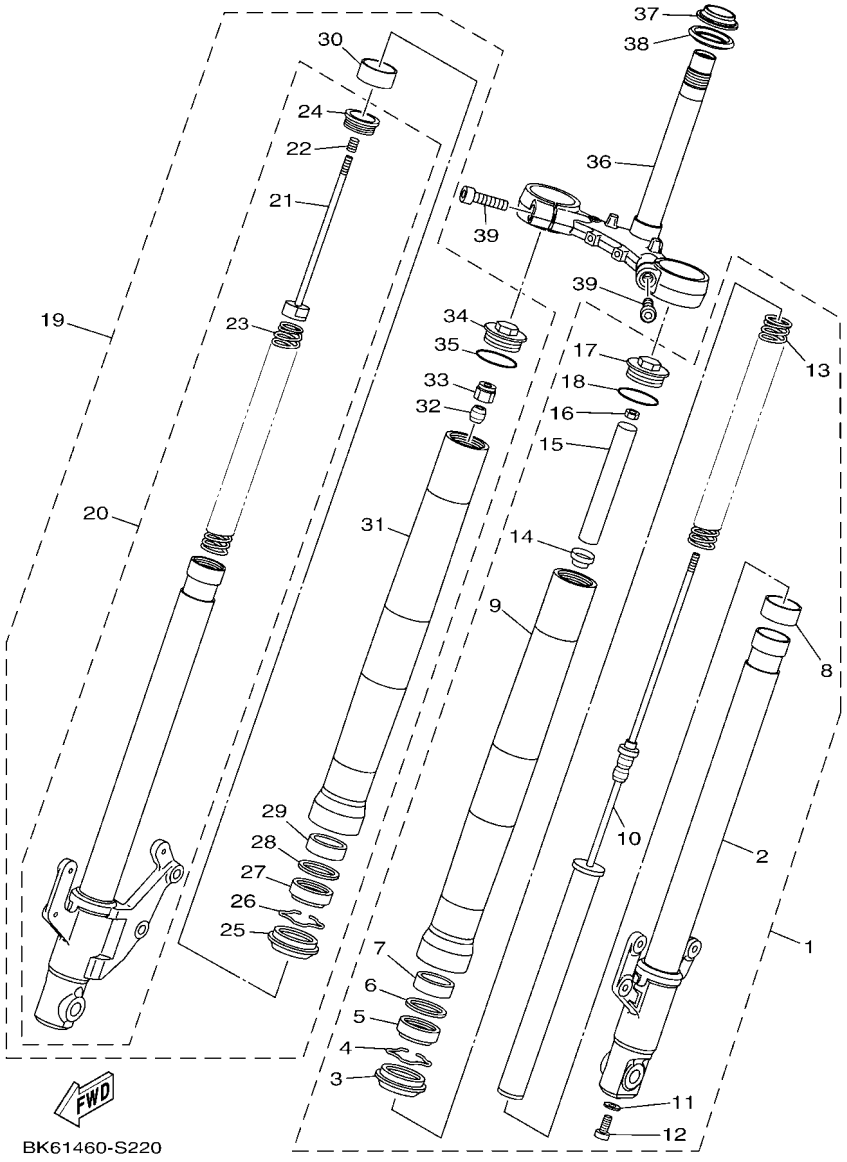

FIG. 22 FRONT FORK

REF. NO.	PART NO.	DESCRIPTION	B2S2					REMARKS
28	31A–23149–31	.WASHER, SPRING UPPER	1					
29	31A–23125–31	.METAL, SLIDE 1	1					
30	BK6–F3171–00	.PISTON, FRONT FORK	1					
31	BK6–F3126–10	.TUBE, OUTER (L.H)	1					
32	BK6–F332K–00	.BUMP, STOP	1					
33	BK6–F3393–00	.NUT, SPECIAL	1					
34	BK6–F3111–00	.BOLT, CAP	1					
35	4V4–23188–L0	.O-RING	1					
36	BK6–F3340–00	UNDER BRACKET COMP.	1					
37	5BP–F3875–00	BEARING, STEERING LOWER	1					
38	5VC–23462–00	SEAL, DUST	1					
39	91312–10040	BOLT, HEXAGON SOCKET HEAD	2					

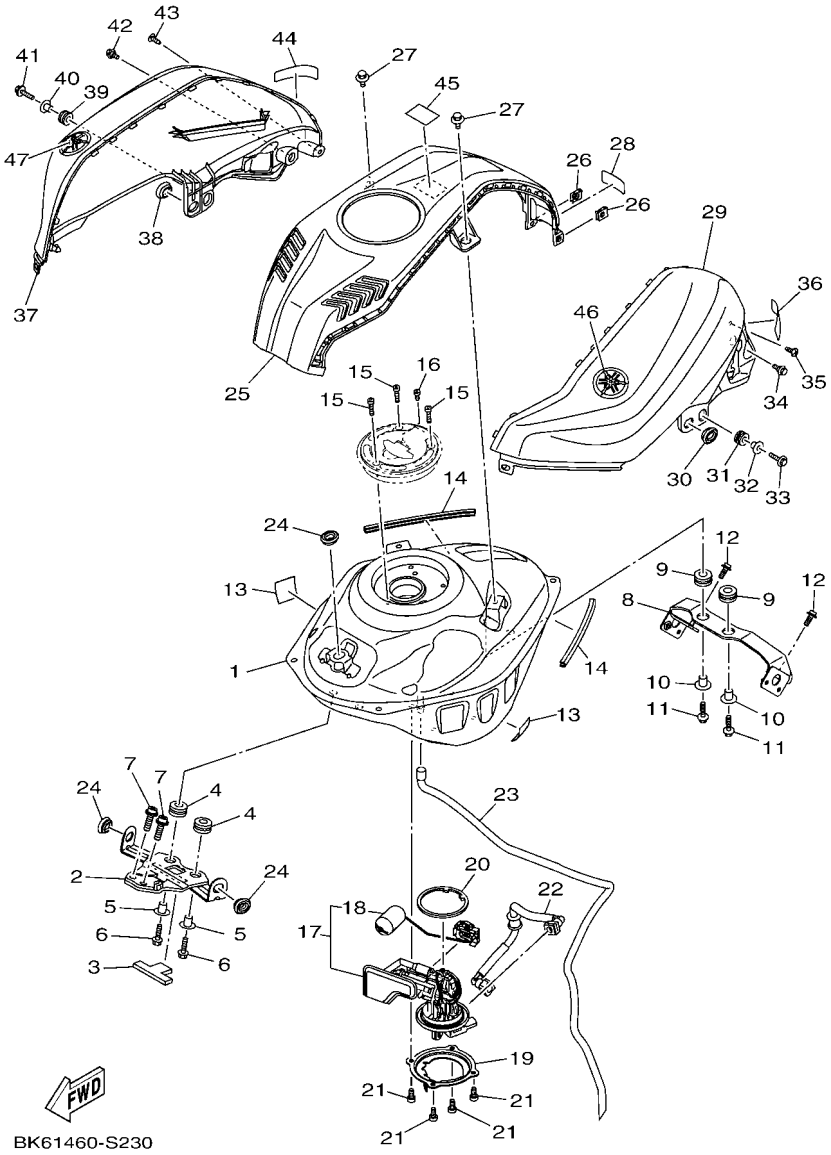

FIG. 23 FUEL TANK

REF. NO.	PART NO.	DESCRIPTION	B2S2					REMARKS
1	BK6–F4110–00	FUEL TANK COMP.	1					
2	BK6–F412Y–00	BRACKET, TANK FITTING	1					
3	BK6–F4181–00	DAMPER, LOCATING 1	1					
4	90480–15363	GROMMET	2					
5	90387–068B2	COLLAR	2					
6	90105–06169	BOLT, FLANGE	2					
7	90110–08839	BOLT, HEXAGON SOCKET HEAD	2					
8	BK6–F4191–00	BRACKET, FUEL TANK 1	1					
9	90480–15363	GROMMET	2					
10	90387–068B2	COLLAR	2					
11	90105–06169	BOLT, FLANGE	2					
12	90110–06215	BOLT, HEXAGON SOCKET HEAD	2					
13	5D9–F414G–10	SEAL	2					
14	BK8–F4188–00	MOLD, FUEL TANK	2					
15	90110–05806	BOLT, HEXAGON SOCKET HEAD	3					
16	91332–05010	BOLT	1					
17	BK6–E3907–00	FUEL PUMP COMP.	1					
18	BK6–H5752–00	.SENDER UNIT ASSY, FUEL METER	1					
19	BK6–F4491–00	BRACKET, FUEL PUMP	1					
20	54P–F414G–10	SEAL	1					
21	91332–05010	BOLT	4					
22	BK6–E3971–00	PIPE, FUEL 1	1					
23	BK7–F4312–00	PIPE 2	1					
24	90480–01558	GROMMET	3					
25	BK6–F41B1–00–P4	COVER, TANK	1					UR SM12 FOR DPBMC
	BK6–F41B1–00–P3	COVER, TANK	1					UR MBL2 FOR SM12
	BK6–F41B1–00–P5	COVER, TANK	1					UR FOR YM6

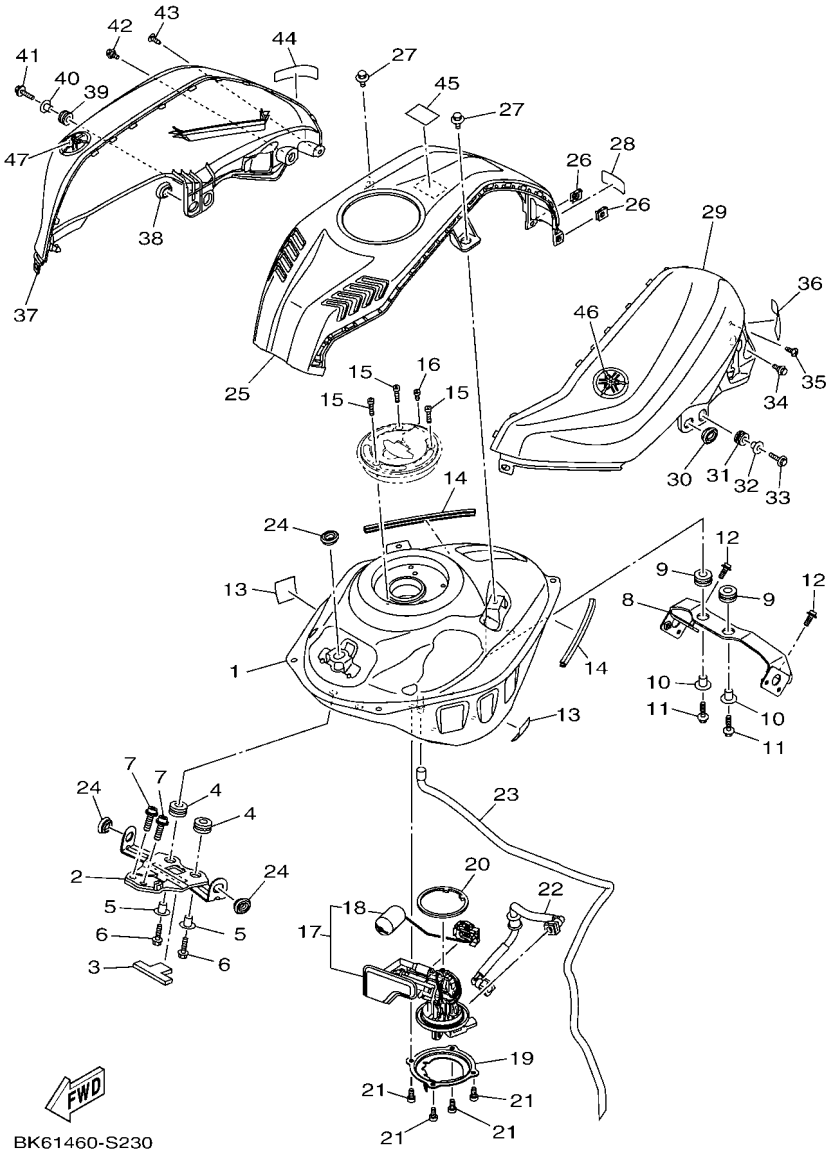

FIG. 23 FUEL TANK

REF. NO.	PART NO.	DESCRIPTION	B2S2					REMARKS
26	90183–05807	NUT, SPRING	2					
27	90109–068B2	BOLT	2					
28	BK6–F414G–00	SEAL	1					
29	BK6–F4129–00–P0	COVER, SIDE 1	1					UR FOR DPBMC
	BK6–F4129–00–P5	COVER, SIDE 1	1					UR FOR SM12
	BK6–F4129–00–P6	COVER, SIDE 1	1					UR MNM3 FOR YM6
30	90480–01559	GROMMET	1					
31	90480–12805	GROMMET	1					
32	90387–06899	COLLAR	1					
33	90159–05011	SCREW, WITH WASHER	1					
34	90109–05014	BOLT	1					
35	97702–50016	SCREW, TAPPING	1					
36	BK6–F414E–00	SEAL 2	1					
37	BK6–F4139–00–P0	COVER, SIDE 2	1					UR FOR DPBMC
	BK6–F4139–00–P5	COVER, SIDE 2	1					UR FOR SM12
	BK6–F4139–00–P6	COVER, SIDE 2	1					UR MNM3 FOR YM6
38	90480–01559	GROMMET	1					
39	90480–12805	GROMMET	1					
40	90387–06899	COLLAR	1					
41	90159–05011	SCREW, WITH WASHER	1					
42	90109–05014	BOLT	1					
43	97702–50016	SCREW, TAPPING	1					
44	BK6–F414E–00	SEAL 2	1					
45	B17–F1568–00	LABEL, WARNING	1					
46	B74–F414B–10	EMBLEM	1					
47	B74–F414B–10	EMBLEM	1					

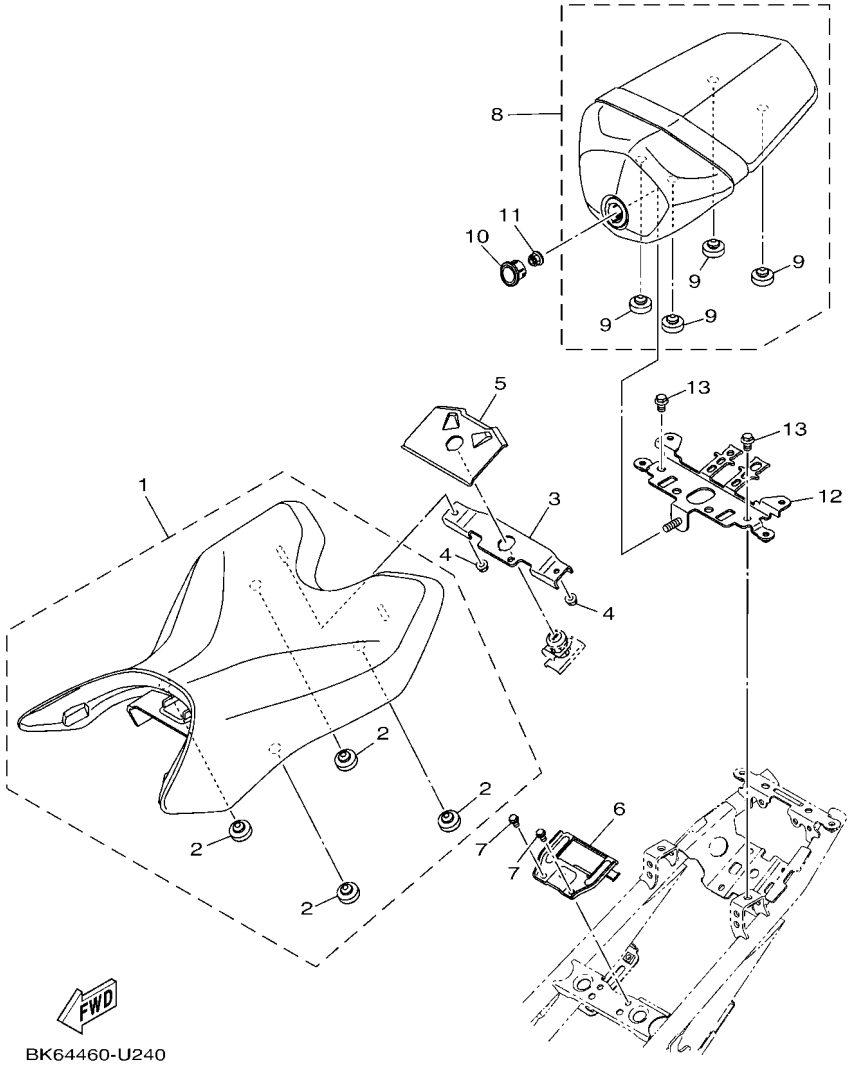

FIG. 24 SEAT

REF. NO.	PART NO.	DESCRIPTION	B2S2					REMARKS
1	BK7–F4710–00	SINGLE SEAT ASSY	1					
2	4LS–F4741–00	.PAD, SEAT	4					
3	BK6–F4728–00	BRACKET, SEAT	1					
4	95607–06200	NUT, SELF U-FLANGE	2					
5	BK6–F4796–00	COVER	1					
6	BK6–F475H–00	BRACKET, SEAT LEVER 1	1					
7	95E32–06010	BOLT, FLANGE DEEP RECESS	2					
8	BK7–F4750–00	TANDEM SEAT ASSY	1					
9	4LS–F4741–00	.PAD, SEAT	4					
10	BK6–F475X–00	COVER,2	1					
11	95602–08200	NUT, U FLANGE	1					
12	BK6–F475J–00	BRACKET, SEAT LEVER 2	1					
13	95022–08012	BOLT, FLANGE	2					

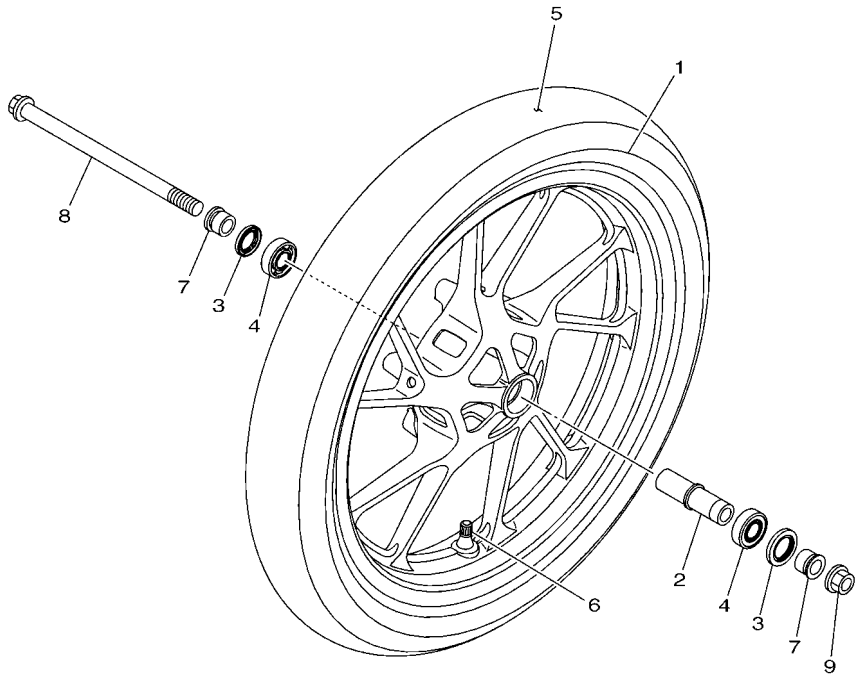

BK61460-S250

FIG. 25 FRONT WHEEL

REF. NO.	PART NO.	DESCRIPTION	B2S2					REMARKS
1	BK6–F5168–00–P0	CAST WHEEL, FRONT	1					DPBM15 FOR DPBMC
	BK6–F5168–00–0X	CAST WHEEL, FRONT	1					YB/DRSC FOR SM12
	BK6–F5168–00–1X	CAST WHEEL, FRONT	1					YB/YS5 FOR YM6
2	21C–F510C–10	COLLAR ASSY.	1					
3	93106–22808	OIL SEAL	2					
4	93306–252YP	BEARING	2					
5	94110–17823	TIRE (100/80-17M/C 52P RX-01F)	1					INOUE
6	93900–00824	VALVE, RIM	1					
7	1CK–F5186–00	COLLAR, WHEEL	2					
8	BK6–F5181–00	AXLE, WHEEL	1					
9	95602–14200	NUT, SELF-LOCKING	1					

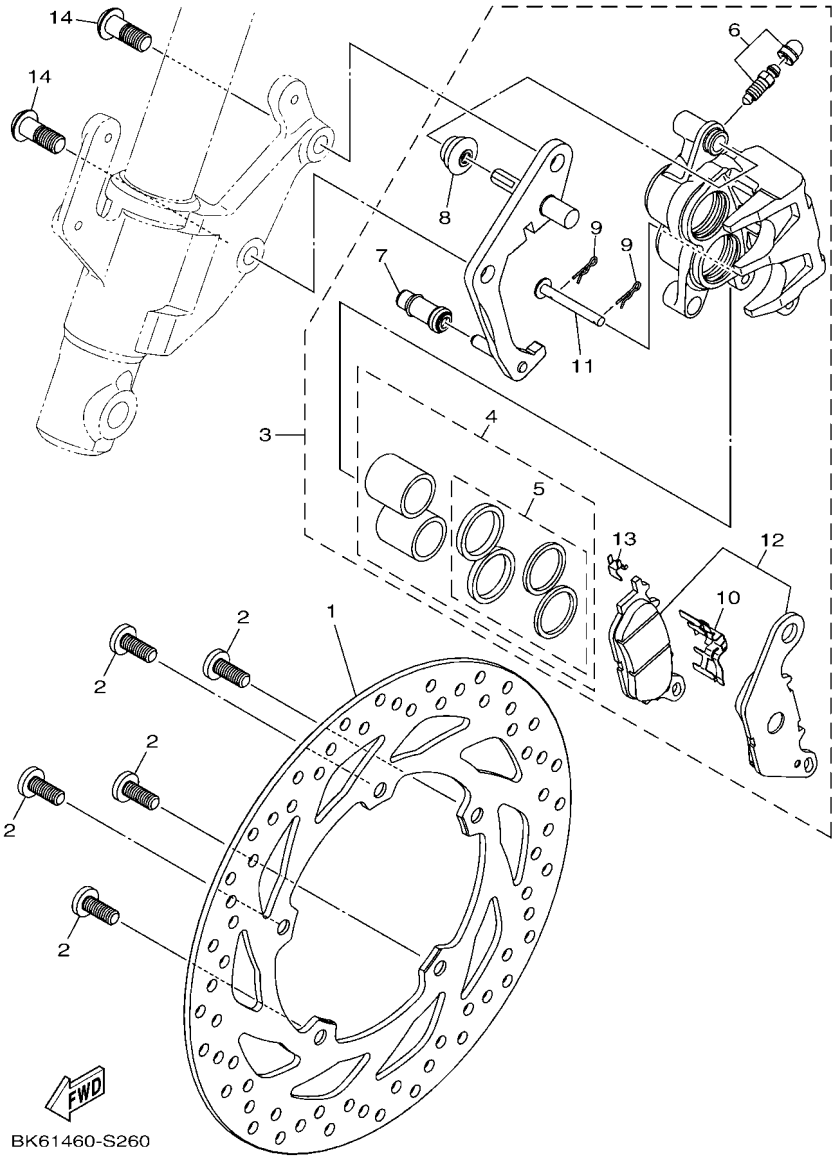

FIG. 26 FRONT BRAKE CALIPER

REF. NO.	PART NO.	DESCRIPTION	B2S2					REMARKS
1	BK6–F582U–00	DISK, BRAKE (RIGHT)	1					
2	90111–08089	BOLT,HEX. SOCKET BUTTON	5					
3	B48–F580U–01	CALIPER ASSY (RIGHT)	1					
4	3C1–F5802–00	.PISTON ASSY, CALIPER	1					
5	3C1–F5803–50	..CALIPER SEAL KIT	1					
6	4C9–W0048–00	.BLEED SCREW KIT	1					
7	5YP–F5937–00	.BOOT 2	1					
8	5YP–F5917–00	.BOOT, CALIPER	1					
9	5YP–F5925–01	.CLIP	2					
10	5P0–F5919–01	.SUPPORT, PAD	1					
11	5YP–F5924–00	.PIN, PAD	1					
12	3C1–F5805–10	.BRAKE PAD KIT	1					
13	5YP–F5939–00	.CLIP, PAD	1					
14	90149–10804	SCREW	2					

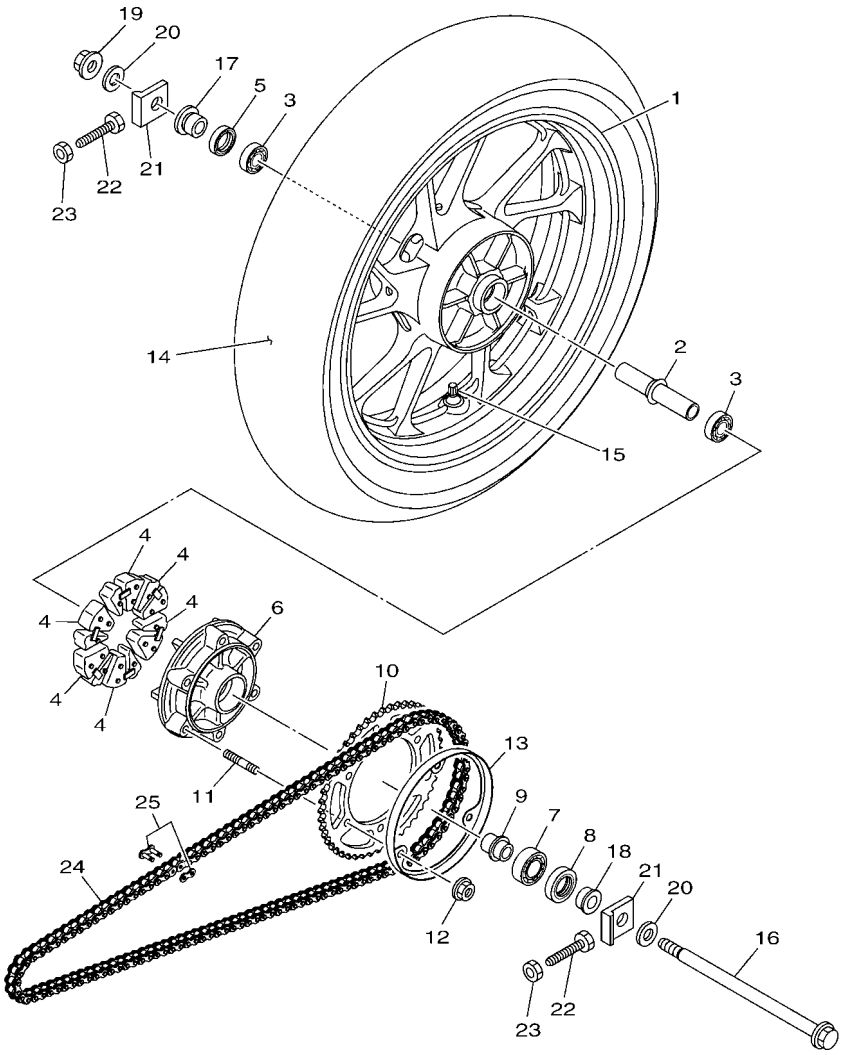

FIG. 27 REAR WHEEL

REF. NO.	PART NO.	DESCRIPTION	B2S2					REMARKS
1	BK6–F5338–00–P0	CAST WHEEL, REAR	1					DPBM15 FOR DPBMC
	BK6–F5338–00–0X	CAST WHEEL, REAR	1					YB/DRSC FOR SM12
	BK6–F5338–00–1X	CAST WHEEL, REAR	1					YB/YS5 FOR YM6
2	B97–F530S–00	COLLAR ASSY	1					
3	93306–252YP	BEARING	2					
4	B97–F5364–00	DAMPER	6					
5	93106–22808	OIL SEAL	1					
6	BK6–F5366–00	CLUTCH, HUB	1					
7	93306–054XC	BEARING	1					
8	93106–26815	OIL SEAL	1					
9	B97–F5376–00	COLLAR, WHEEL	1					
10	BK6–F5448–00	SPROCKET, DRIVEN (48T)	1					
11	90116–08846	BOLT, STUD	6					
12	95602–08200	NUT, U FLANGE	6					
13	BK6–F5414–00	SPACER	1					
14	94114–17802	TIRE (140/70-17M/C 66S RX-01R)	1					INOUE
15	93900–00824	VALVE, RIM	1					
16	5BP–F5381–00	AXLE, WHEEL	1					
17	B97–F5377–00	COLLAR, WHEEL	1					
18	B97–F5383–00	COLLAR, WHEEL	1					
19	95602–14200	NUT, SELF-LOCKING	1					
20	90201–15814	WASHER, PLATE	2					
21	1CK–F5388–00	PULLER, CHAIN 1	2					
22	90101–08006	BOLT	2					
23	95302–08700	NUT, HEXAGON	2					
24	9X568–K1127	CHAIN (DID428VIX2 128LL)	1					
25	94668–K1021	JOINT, CHAIN(DID428VIX2 ZJ)	1					

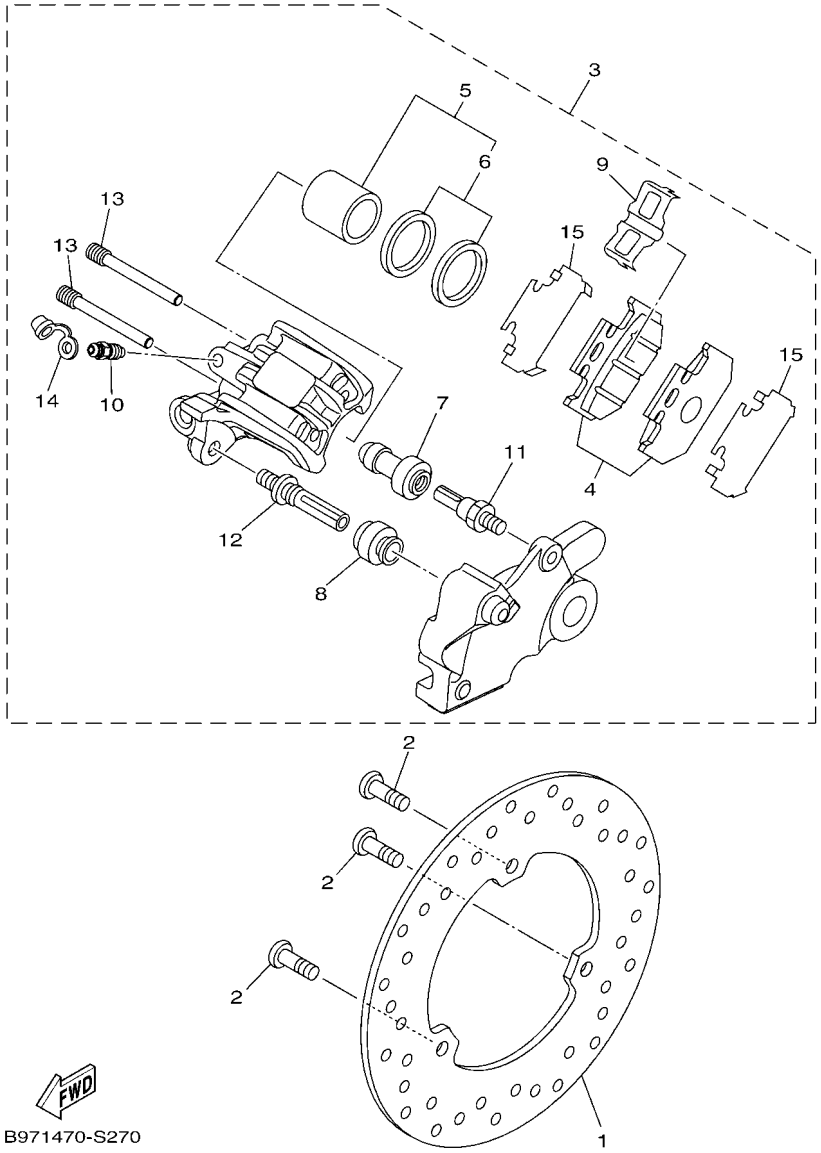

FIG. 28 REAR BRAKE CALIPER

REF. NO.	PART NO.	DESCRIPTION	B2S2					REMARKS
1	BK6–F582W–00	DISK, REAR BRAKE 2	1					
2	90111–08089	BOLT,HEX. SOCKET BUTTON	3					
3	B97–F580W–00	CALIPER ASSY, REAR 2	1					
4	B97–F5806–00	.BRAKE PAD KIT 2	1					
5	5XT–25802–50	.PISTON ASSY, CALIPER	1					
6	3JD–25803–50	..CALIPER SEAL KIT	1					
7	5HH–F5937–00	.BOOT 2	1					
8	5HH–F5917–00	.BOOT, CALIPER	1					
9	3SP–25919–51	.SUPPORT, PAD	1					
10	5HH–F5824–00	.SCREW, BLEED	1					
11	5HH–F5914–00	.PIN, SLIDE	1					
12	3SP–25926–51	.BOLT	1					
13	3SP–25924–51	.PIN, PAD	2					
14	5HH–F5825–51	.CAP	1					
15	5XT–25827–00	.SHIM, CALIPER	2					

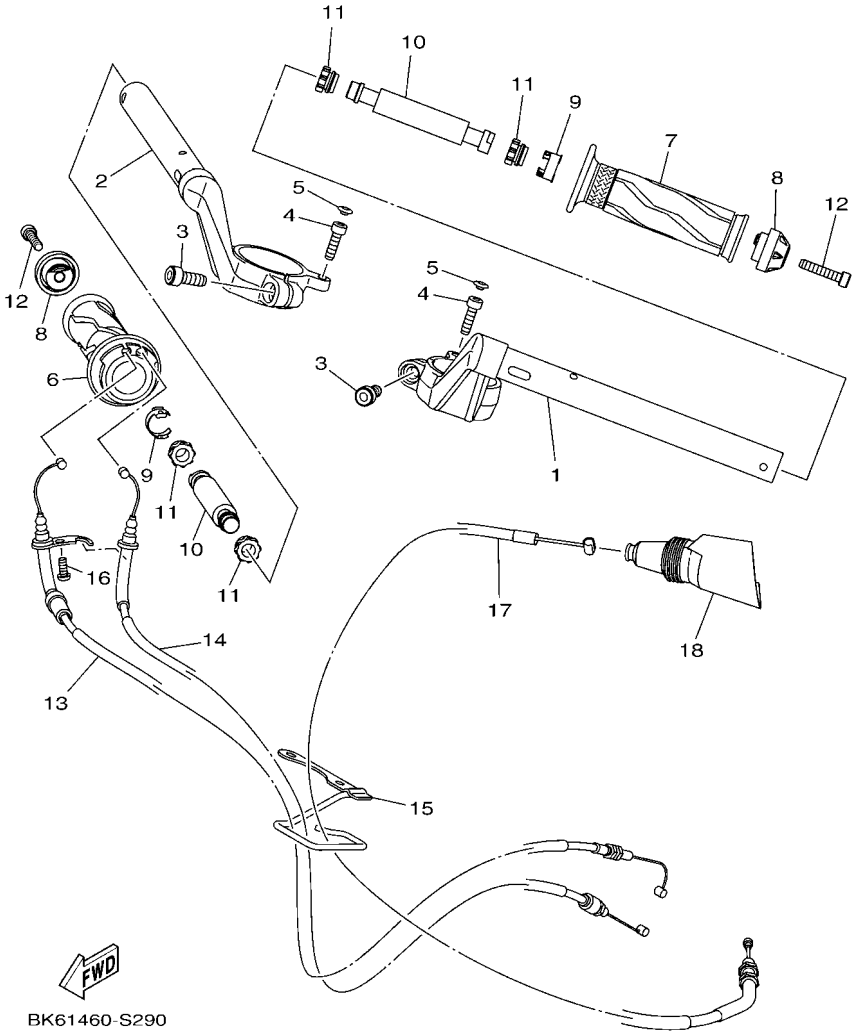

FIG. 29 STEERING HANDLE & CABLE

REF. NO.	PART NO.	DESCRIPTION	B2S2					REMARKS
1	BK6–F6121–00	HANDLEBAR (LEFT)	1					
2	BK6–F6122–00	HANDLEBAR (RIGHT)	1					
3	91317–08020	BOLT,HEX.SOCKET HEAD	2					
4	91317–06020	BOLT,HEX.SOCKET HEAD	2					
5	20P–F3469–00	CAP, BOLT	2					
6	BK7–F6240–00	GRIP ASSY	1					
7	20P–F6241–00	GRIP	1					
8	BK7–F6246–00	END, GRIP	2					
9	1S7–F6257–00	STOPPER	2					
10	1S7–F622H–00	WEIGHT	2					
11	1S7–F622F–00	DAMPER, LOCATING 1	4					
12	91317–06030	BOLT,HEX.SOCKET HEAD	2					
13	BK6–F6311–00	WIRE, THROTTLE 1	1					
14	BK6–F6312–00	CABLE, THROTTLE 2	1					
15	BK6–F6315–00	GUIDE, WIRE	1					
16	98507–05012	SCREW, PAN HEAD	1					
17	BK6–F6335–00	WIRE, CLUTCH	1					
18	3RS–F6372–00	COVER, HANDLE LEVER 1	1					

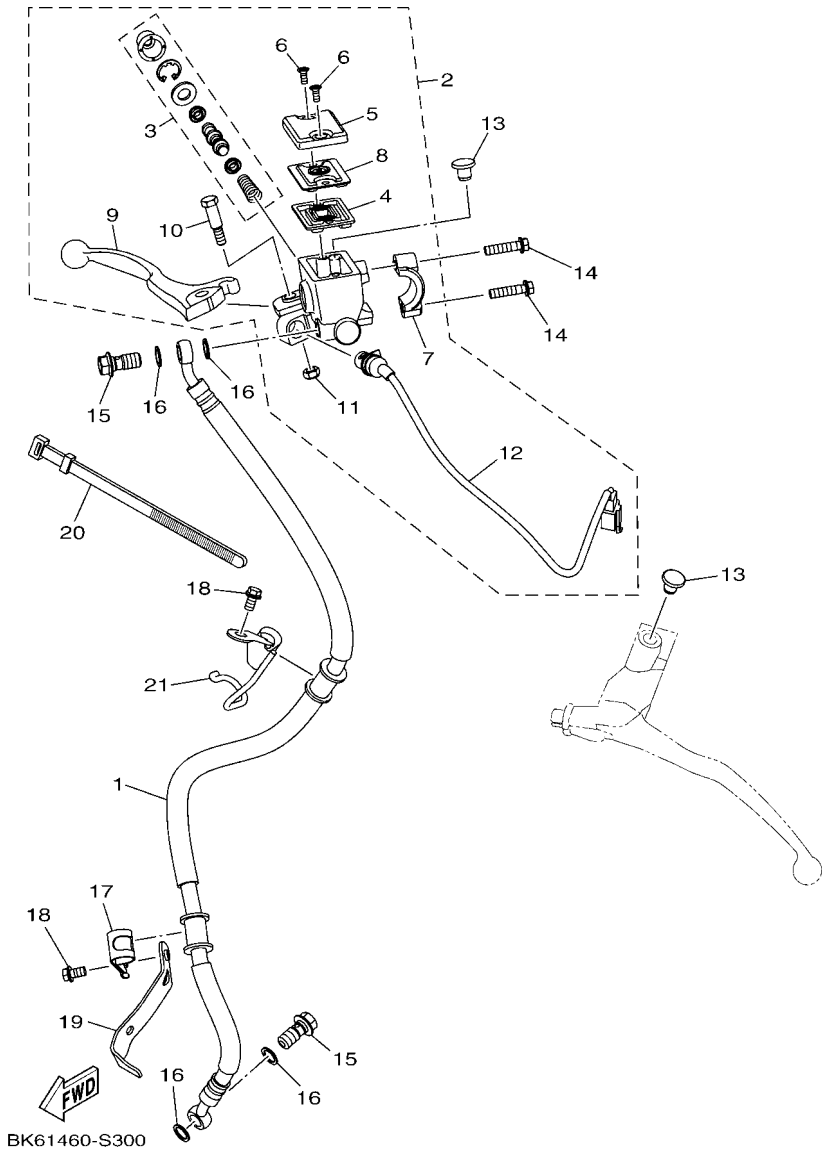

FIG. 30 FRONT MASTER CYLINDER

REF. NO.	PART NO.	DESCRIPTION	B2S2					REMARKS
1	BK6–F5872–00	HOSE, BRAKE 1	1					
2	45P–F583T–01	MASTER CYLINDER ASSY	1					
3	5P0–W0041–00	.CYLINDER KIT, MASTER	1					
4	3RW–F5854–00	.DIAPHRAGM, RESERVOIR	1					
5	3C1–F5852–00	.CAP, RESERVOIR	1					
6	36Y–2589H–00	.SCREW	2					
7	3RW–F5867–00	.BRACKET, MASTER CYLINDER	1					
8	3C1–F5855–00	.BUSH,DIAPHRAGM	1					
9	38B–H3922–00	.LEVER 2	1					
10	90109–06577	.BOLT	1					
11	95602–06100	.NUT, SELF-LOCKING	1					
12	45P–H3980–00	.FRONT STOP SWITCH ASSY	1					
13	90338–09803	PLUG	2					
14	95E37–06025	BOLT, FLANGE DEEP RECESS	2					
15	90401–10812	BOLT, UNION	2					
16	90201–10118	WASHER, PLATE	4					
17	BK6–F5886–00	HOLDER, BRAKE HOSE	1					
18	95027–06010	BOLT, FLANGE	2					
19	BK6–F5876–00	HOLDER, BRAKE HOSE 2	1					
20	3AY–H3936–00	BAND, SWITCH CORD	1					
21	BK6–F5887–00	HOLDER, BRAKE HOSE 3	1					

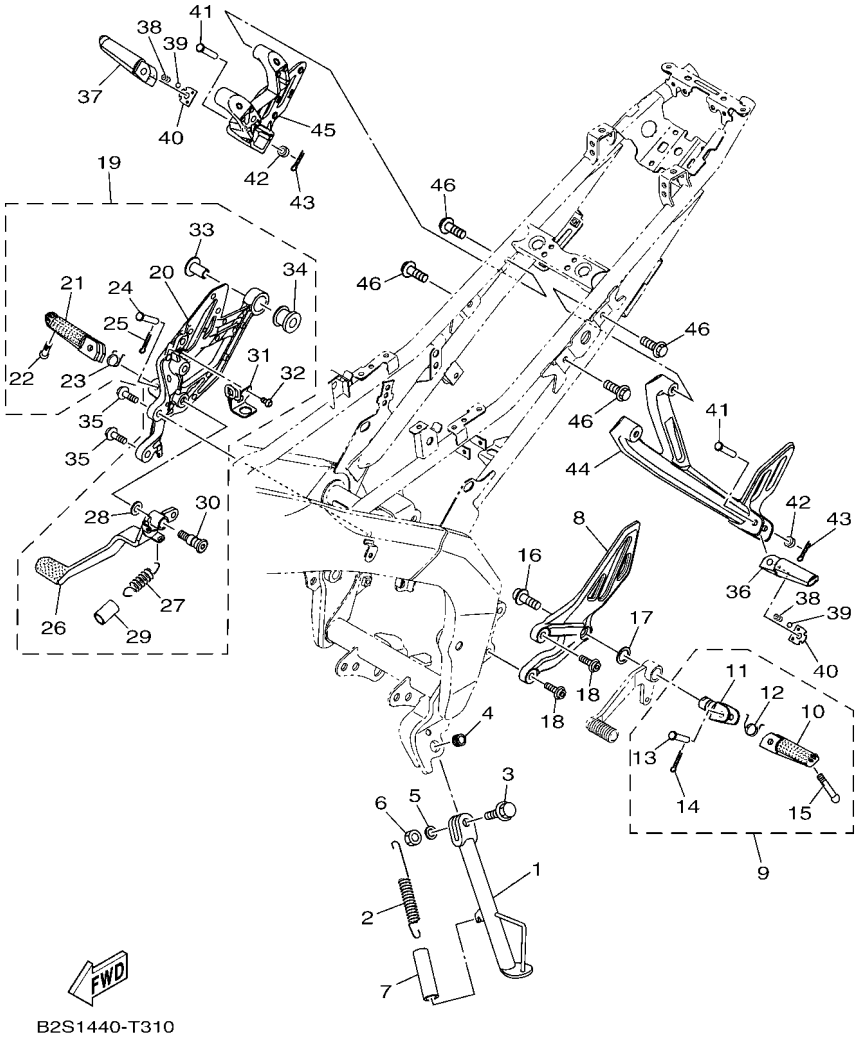

FIG. 31 STAND & FOOTREST

REF. NO.	PART NO.	DESCRIPTION	B2S2					REMARKS
1	BK6–F7311–00	STAND, SIDE	1					
2	90506–28800	SPRING, TENSION	1					
3	90105–10888	BOLT, FLANGE	1					
4	90387–10003	COLLAR	1					
5	92902–10600	WASHER, PLATE	1					
6	95612–10100	NUT, U	1					
7	90445–21848	HOSE (L70)	1					
8	BK6–F7442–00	BRACKET 2	1					
9	BK6–F7410–00	FRONT FOOTREST ASSY (LEFT)	1					
10	20P–F7451–00	.FOOTREST	1					
11	5BP–F7411–00	.FOOTREST 1	1					
12	90508–183B9	.SPRING, TORSION	1					
13	91701–08035	.PIN	1					
14	91401–25015	.PIN, COTTER	1					
15	90109–086F8	.BOLT	1					
16	90110–10025	BOLT, HEXAGON SOCKET HEAD	1					
17	90201–173U5	WASHER, PLATE	1					
18	90110–08803	BOLT, HEXAGON SOCKET HEAD	2					
19	BK6–F7404–10	FOOTREST ASSY 2	1					
20	BK6–F7443–00	.BRACKET 3	1					
21	20P–F7461–00	.FOOTREST	1					
22	90109–086F8	.BOLT	1					
23	90508–184B0	.SPRING, TORSION	1					
24	90240–08145	.PIN, CLEVIS	1					
25	91401–25015	.PIN, COTTER	1					
26	BK7–F7211–00	.PEDAL, BRAKE	1					
27	90506–26807	.SPRING, TENSION	1					

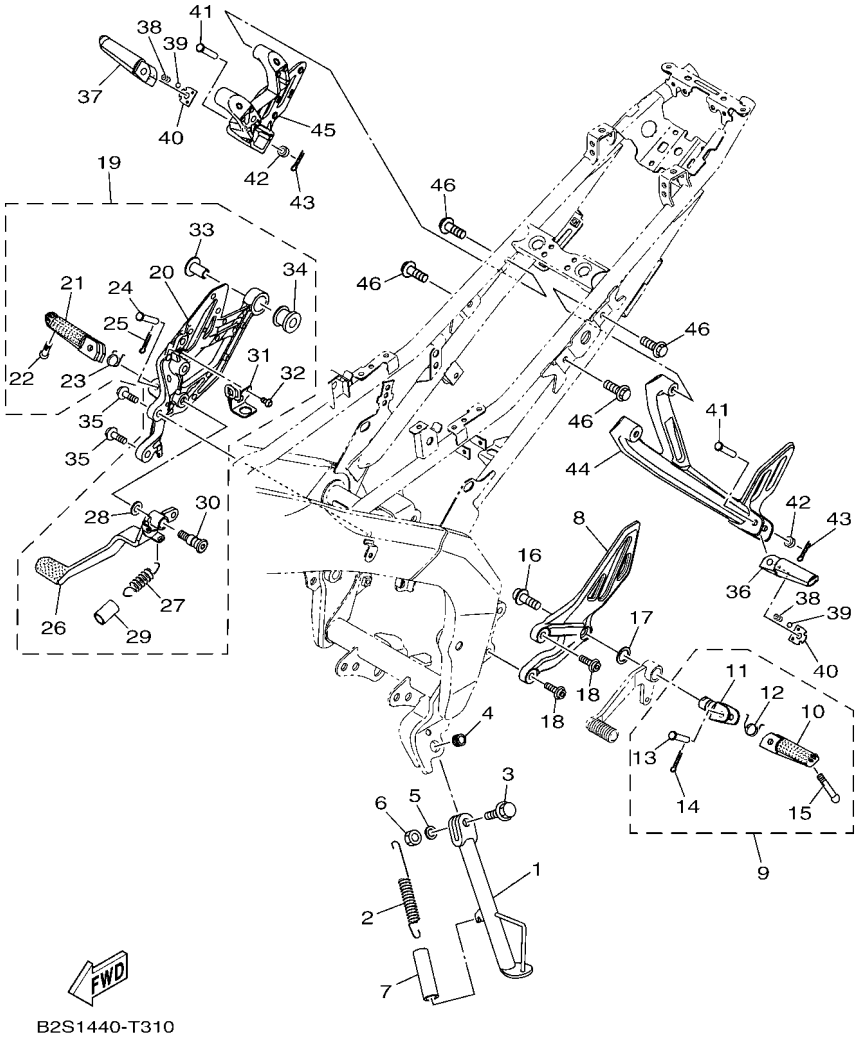

FIG. 31 STAND & FOOTREST

REF. NO.	PART NO.	DESCRIPTION	B2S2					REMARKS
28	90201–10021	.WASHER, PLATE	1					
29	90445–19807	.HOSE	1					
30	45P–F7261–00	.SHAFT	1					
31	BK6–F144G–10	.STAY, STOP SWITCH	1					
32	92012–06010	.BOLT, BUTTON HEAD	1					
33	90387–08842	.COLLAR	1					
34	BK6–E4747–00	.DAMPER, MUFFLER	1					
35	90110–08803	BOLT, HEXAGON SOCKET HEAD	2					
36	45P–F7431–00	FOOTREST, REAR 1	1					
37	45P–F7441–00	FOOTREST, REAR 2	1					
38	90501–12743	SPRING, COMPRESSION	2					
39	93501–04830	BALL	2					
40	1WD–F7437–00	WASHER, SPECIAL	2					
41	91702–08042	PIN, CLEVIS	2					
42	B2S–F7473–00	DAMPER	2					
43	91401–25015	PIN, COTTER	2					
44	BK6–F741L–00	BRACKET 4	1					
45	BK6–F742L–00	BRACKET 5	1					
46	90105–08180	BOLT, FLANGE	4					

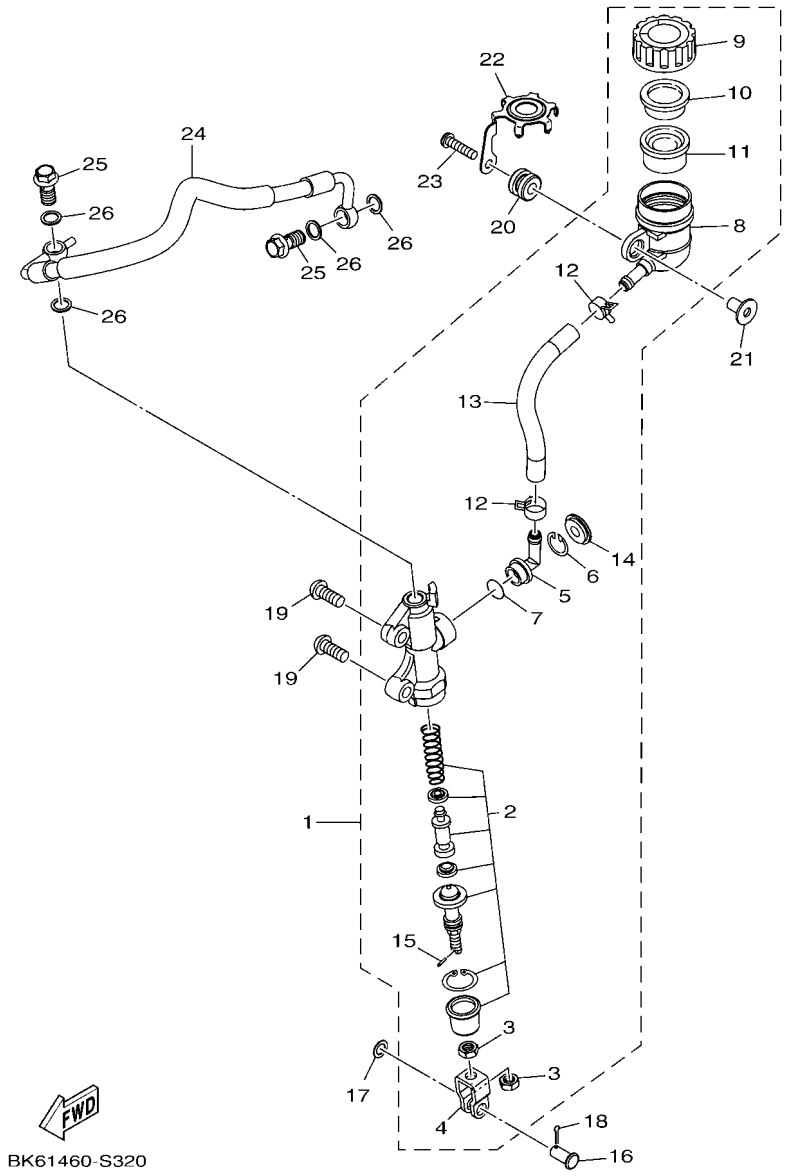

FIG. 32 REAR MASTER CYLINDER

REF. NO.	PART NO.	DESCRIPTION	B2S2					REMARKS
1	BK6–F580E–00	REAR MASTER CYLINDER ASSY	1					
2	B97–F5808–00	.CYLINDER KIT, MASTER	1					
3	95302–08700	.NUT, HEXAGON	2					
4	50C–F7222–00	.JOINT	1					
5	50C–F582A–50	.JOINT	1					
6	50C–F5866–00	.CIRCLIP	1					
7	93210–15620	.O-RING	1					
8	50C–F5894–11	.TANK, RESERVOIR	1					
9	BK6–F5852–00	.CAP, RESERVOIR	1					
10	50C–F5855–00	.BUSH,DIAPHRAGM	1					
11	2VN–F5854–00	.DIAPHRAGM, RESERVOIR	1					
12	90467–12085	.CLIP	2					
13	BK6–F5895–00	.HOSE, RESERVOIR	1					
14	50C–F589A–00	.COVER, DUST	1					
15	5BU–27234–00	.PIN, BRAKE ROD	1					
16	90240–08005	PIN, CLEVIS	1					
17	90201–08066	WASHER, PLATE	1					
18	91401–20012	PIN, COTTER	1					
19	92012–08020	BOLT, BUTTON HEAD	2					
20	55C–F4742–00	GROMMET	1					
21	55C–F6259–00	COLLAR	1					
22	50C–F5888–00	COVER, RESERVOIR TANK	1					
23	98507–06025	SCREW, PAN HEAD	1					
24	BK6–F5873–00	HOSE, BRAKE 2	1					
25	90401–10812	BOLT, UNION	2					
26	90201–10118	WASHER, PLATE	4					

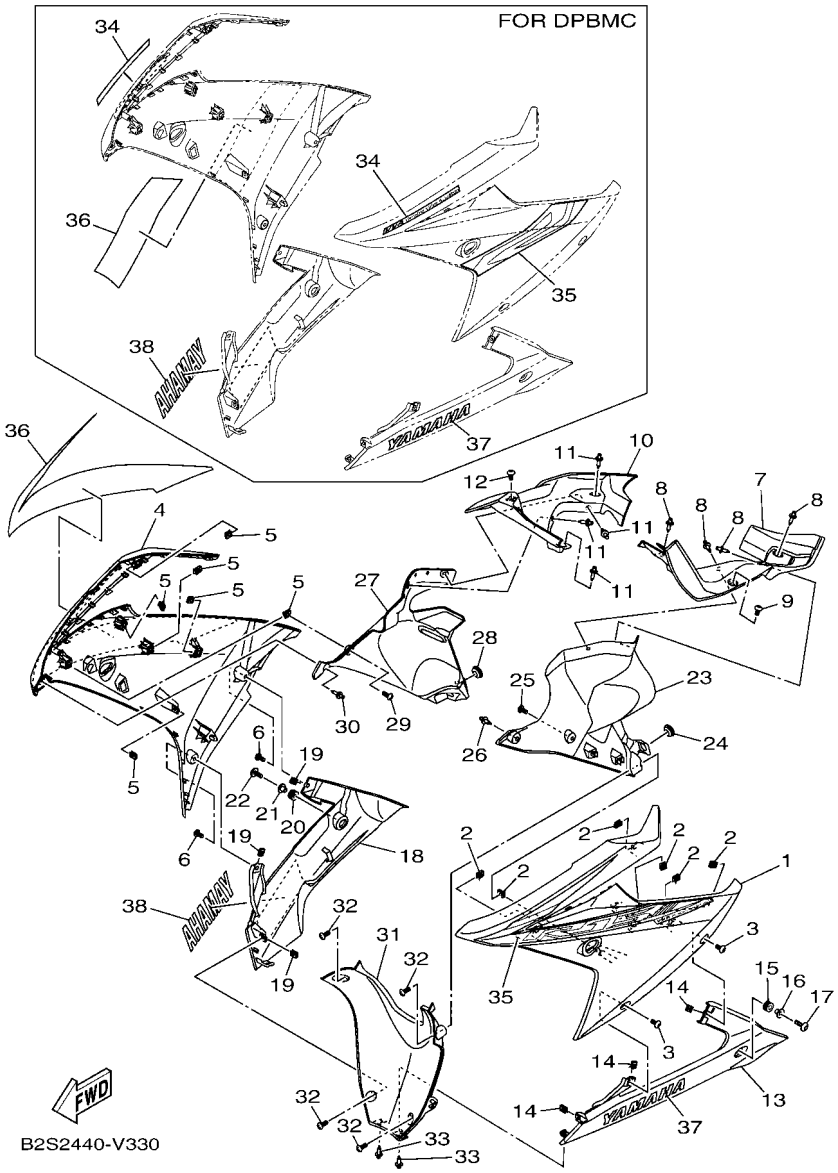

FIG. 33 LEG SHIELD

REF. NO.	PART NO.	DESCRIPTION	B2S2					REMARKS
1	BK6–F835U–00–P5	PANEL 1	1					UR SM12 FOR DPBMC
	BK6–F835U–00–P1	PANEL 1	1					UR MBL2 FOR SM12
	BK6–F835U–00–P6	PANEL 1	1					UR MNM3 FOR YM6
2	90183–05807	NUT, SPRING	6					
3	90160–05812	SCREW, ROUND TAPPING	2					
4	BK6–F835V–00–P5	PANEL 2	1					UR SM12 FOR DPBMC
	BK6–F835V–00–P1	PANEL 2	1					UR MBL2 FOR SM12
	BK6–F835V–00–P6	PANEL 2	1					UR MNM3 FOR YM6
5	90183–05807	NUT, SPRING	6					
6	90160–05812	SCREW, ROUND TAPPING	2					
7	BK6–F837L–00	PANEL, CONSOLE 1	1					
8	90269–06816	RIVET	4					
9	90160–05812	SCREW, ROUND TAPPING	1					
10	BK6–F837M–00	PANEL, CONSOLE 2	1					
11	90269–06816	RIVET	4					
12	90160–05812	SCREW, ROUND TAPPING	1					
13	BK6–F8385–00–P3	COVER, UNDER	1					SM12 FOR DPBMC,SM12
	BK6–F8385–00–P4	COVER, UNDER	1					FOR YM6
14	90183–05807	NUT, SPRING	3					
15	90480–12808	GROMMET	1					
16	90387–06899	COLLAR	1					
17	90111–06117	BOLT,HEX. SOCKET BUTTON	1					
18	BK6–F8395–00–P3	COVER, UNDER 2	1					SM12 FOR DPBMC,SM12
	BK6–F8395–00–P4	COVER, UNDER 2	1					FOR YM6
19	90183–05807	NUT, SPRING	3					
20	90480–12808	GROMMET	1					
21	90387–06899	COLLAR	1					

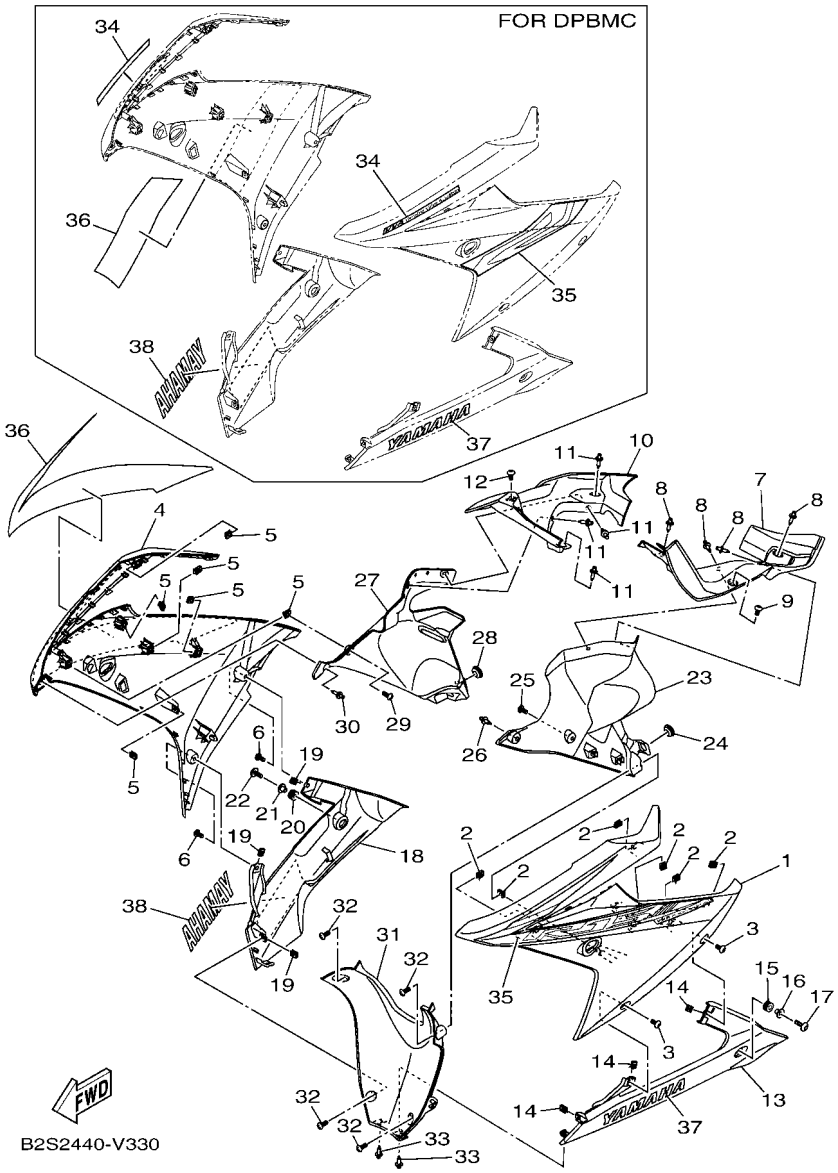

FIG. 33 LEG SHIELD

REF. NO.	PART NO.	DESCRIPTION	B2S2					REMARKS
22	90111–06117	BOLT,HEX. SOCKET BUTTON	1					
23	BK6–F836K–00	PANEL, INNER 1	1					
24	90480–01559	GROMMET	1					
25	97707–50016	SCREW, TRUSS HEAD TAPPING	1					
26	90269–06816	RIVET	1					
27	BK6–F836L–00	PANEL, INNER 2	1					
28	90480–01559	GROMMET	1					
29	97707–50016	SCREW, TRUSS HEAD TAPPING	1					
30	90269–06816	RIVET	1					
31	BK6–F836M–00	PANEL, INNER 3	1					
32	97707–50016	SCREW, TRUSS HEAD TAPPING	4					
33	90269–06816	RIVET	2					
34	B2S–F8398–30	GRAPHIC 5	2					FOR DPBMC
35	B2S–F839A–30	GRAPHIC 7	1					UR FOR DPBMC
	B2S–F839A–40	GRAPHIC 7	1					UR FOR SM12
	B2S–F839A–50	GRAPHIC 7	1					UR FOR YM6
36	B2S–F839E–30	GRAPHIC 8	1					UR FOR DPBMC
	B2S–F839E–40	GRAPHIC 8	1					UR FOR SM12
	B2S–F839E–50	GRAPHIC 8	1					UR FOR YM6
37	99236–00180	EMBLEM, YAMAHA	1					UR FOR DPBMC,SM12
	99234–00180	EMBLEM, YAMAHA	1					UR FOR YM6
38	99236–00180	EMBLEM, YAMAHA	1					UR FOR DPBMC,SM12
	99234–00180	EMBLEM, YAMAHA	1					UR FOR YM6

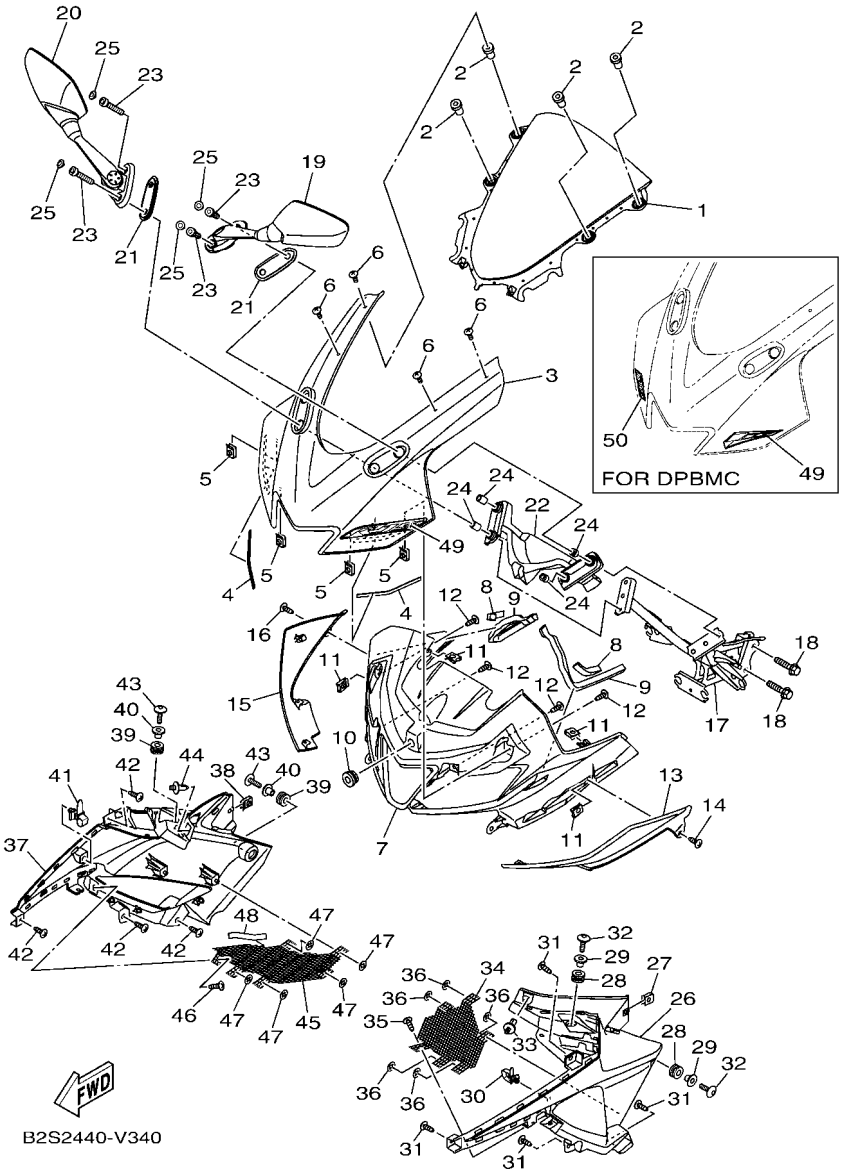

FIG. 34 WINDSHIELD

REF. NO.	PART NO.	DESCRIPTION	B2S2					REMARKS
1	BK6–F8381–00	WINDSHIELD	1					
2	90179–05849	NUT	4					
3	BK6–F8351–00–P0	BODY, COWLING	1					UR FOR DPBMC
	BK6–F8351–00–P4	BODY, COWLING	1					UR FOR SM12
	BK6–F8351–00–P5	BODY, COWLING	1					UR MNM3 FOR YM6
4	90520–02838	DAMPER, PLATE	2					
5	90183–05807	NUT, SPRING	4					
6	90150–05023	SCREW, ROUND HEAD	4					
7	BK6–F835G–00	BODY, FRONT UPPER 1	1					
8	90520–10840	DAMPER, PLATE	2					
9	90520–10841	DAMPER, PLATE	2					
10	90480–13398	GROMMET	1					
11	90183–05807	NUT, SPRING	4					
12	97702–50016	SCREW, TAPPING	4					
13	BK6–F172G–00–P0	PANEL 3	1					UR FOR DPBMC
	BK6–F172G–00–P4	PANEL 3	1					UR FOR SM12
	BK6–F172G–00–P5	PANEL 3	1					UR FOR YM6
14	97702–50012	SCREW, TAPPING	1					
15	BK6–F172H–00–P0	PANEL 4	1					UR FOR DPBMC
	BK6–F172H–00–P4	PANEL 4	1					UR FOR SM12
	BK6–F172H–00–P5	PANEL 4	1					UR FOR YM6
16	97702–50012	SCREW, TAPPING	1					
17	BK6–F8356–00	STAY 1	1					
18	90105–08002	BOLT, FLANGE	2					
19	BK7–F6280–00	REAR VIEW MIRROR ASSY (LEFT)	1					
20	BK7–F6290–00	REAR VIEW MIRROR ASSY (RIGHT)	1					
21	BK6–F8483–00	PLATE, RUBBER 1	2					

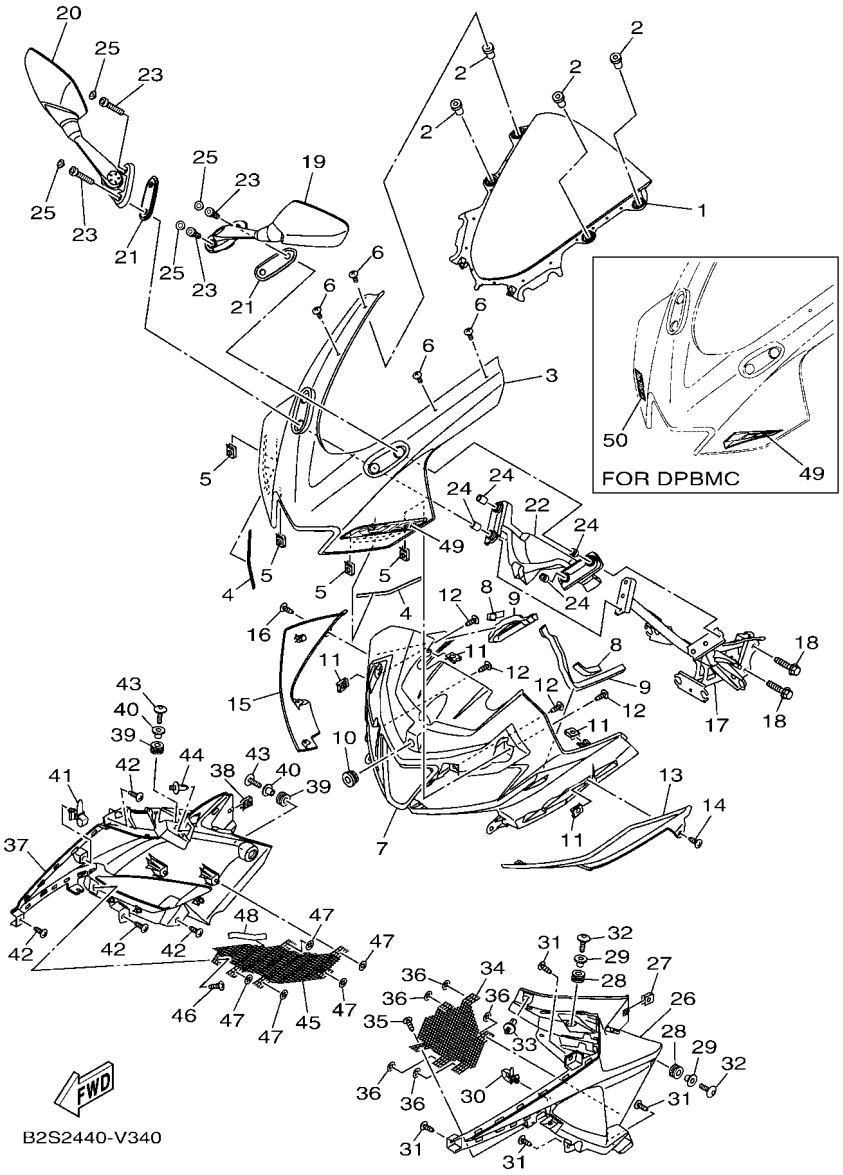

FIG. 34 WINDSHIELD

REF. NO.	PART NO.	DESCRIPTION	B2S2					REMARKS
22	BK6–F8484–00	PLATE, RUBBER 2	1					
23	91317–06030	BOLT,HEX.SOCKET HEAD	4					
24	90387–06131	COLLAR	4					
25	20P–F3469–00	CAP, BOLT	4					
26	BK6–F117V–00	COVER 7	1					
27	90183–05807	NUT, SPRING	1					
28	90480–12808	GROMMET	2					
29	90387–06899	COLLAR	2					
30	90464–12036	CLAMP	1					
31	97702–50016	SCREW, TAPPING	4					
32	90111–06117	BOLT,HEX. SOCKET BUTTON	2					
33	90269–06816	RIVET	1					
34	BK6–F837V–01	GRILL, AIR OUTLET 1	1					
35	97702–50016	SCREW, TAPPING	1					
36	90183–05067	NUT, SPRING	5					
37	BK6–F117W–00	COVER 8	1					
38	90183–05807	NUT, SPRING	1					
39	90480–12808	GROMMET	2					
40	90387–06899	COLLAR	2					
41	90464–12036	CLAMP	1					
42	97702–50016	SCREW, TAPPING	4					
43	90111–06117	BOLT,HEX. SOCKET BUTTON	2					
44	90269–06816	RIVET	1					
45	BK6–F837W–01	GRILL, AIR OUTLET 2	1					
46	97702–50016	SCREW, TAPPING	1					
47	90183–05067	NUT, SPRING	5					
48	1WD–F1278–00	MOLD	1					

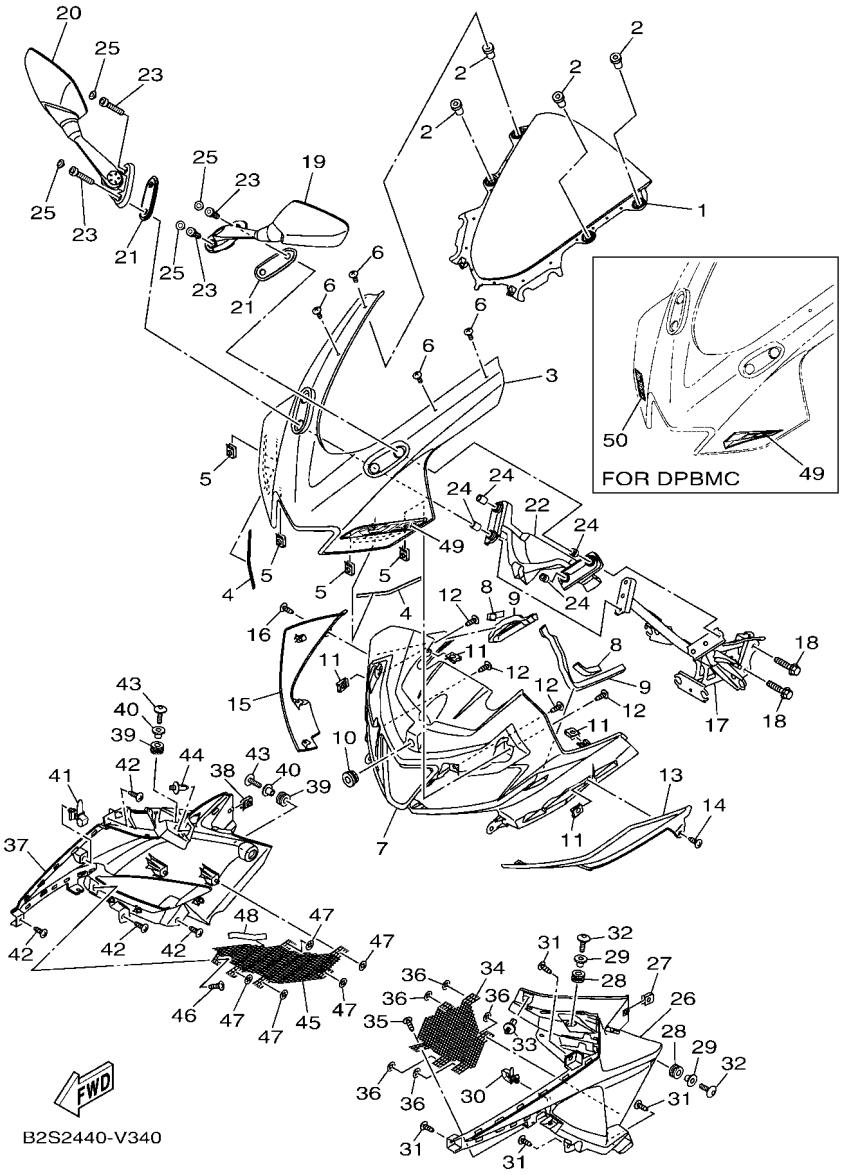

FIG. 34 WINDSHIELD

REF. NO.	PART NO.	DESCRIPTION	B2S2					REMARKS
49	B2S–F8393–30	GRAPHIC 3	1					UR FOR DPBMC
	B2S–F8393–40	GRAPHIC 3	1					UR FOR SM12
	B2S–F8393–50	GRAPHIC 3	1					UR FOR YM6
50	B2S–F8394–30	GRAPHIC 4	1					FOR DPBMC

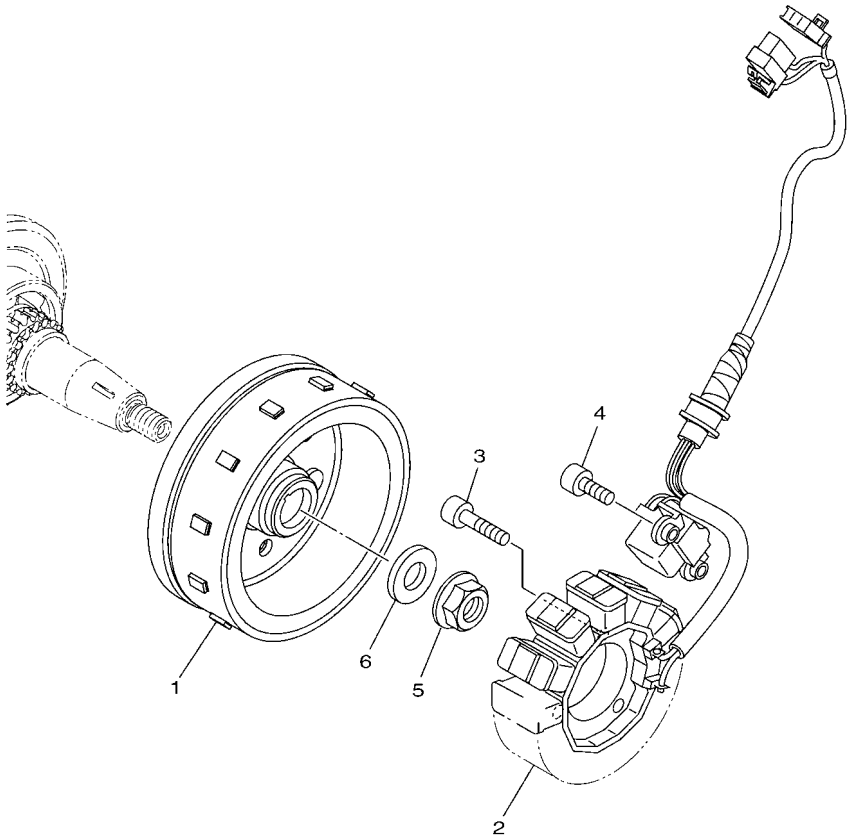

BK61460-S350

FIG. 35 GENERATOR

REF. NO.	PART NO.	DESCRIPTION	B2S2					REMARKS
1	2PV–H1450–01	ROTOR ASSY	1					
2	BK6–H1410–02	STATOR ASSY	1					
3	91312–06025	BOLT, HEXAGON SOCKET HEAD	3					
4	91312–06016	BOLT, HEXAGON SOCKET HEAD	2					
5	95702–12500	NUT, FLANGE	1					
6	90201–12019	WASHER, PLATE	1					

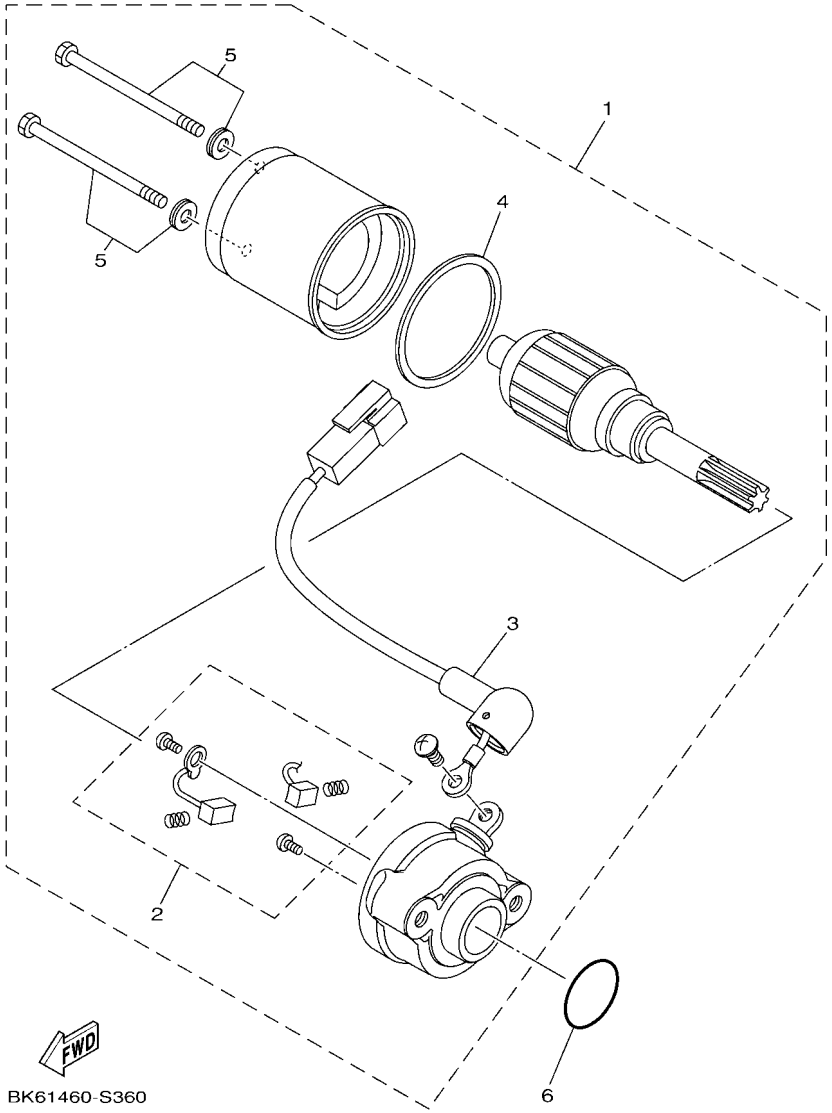

FIG. 36 STARTING MOTOR

REF. NO.	PART NO.	DESCRIPTION	B2S2					REMARKS
1	BK6–H1800–00	STARTING MOTOR ASSY	1					
2	2PH–H1801–10	.BRUSH SET	1					
3	1FD–H183G–00	.CORD COMP.	1					
4	5D9–H1861–00	.GASKET	1					
5	5D9–H1828–00	.SCREW SET	2					
6	93210–26805	O-RING	1					

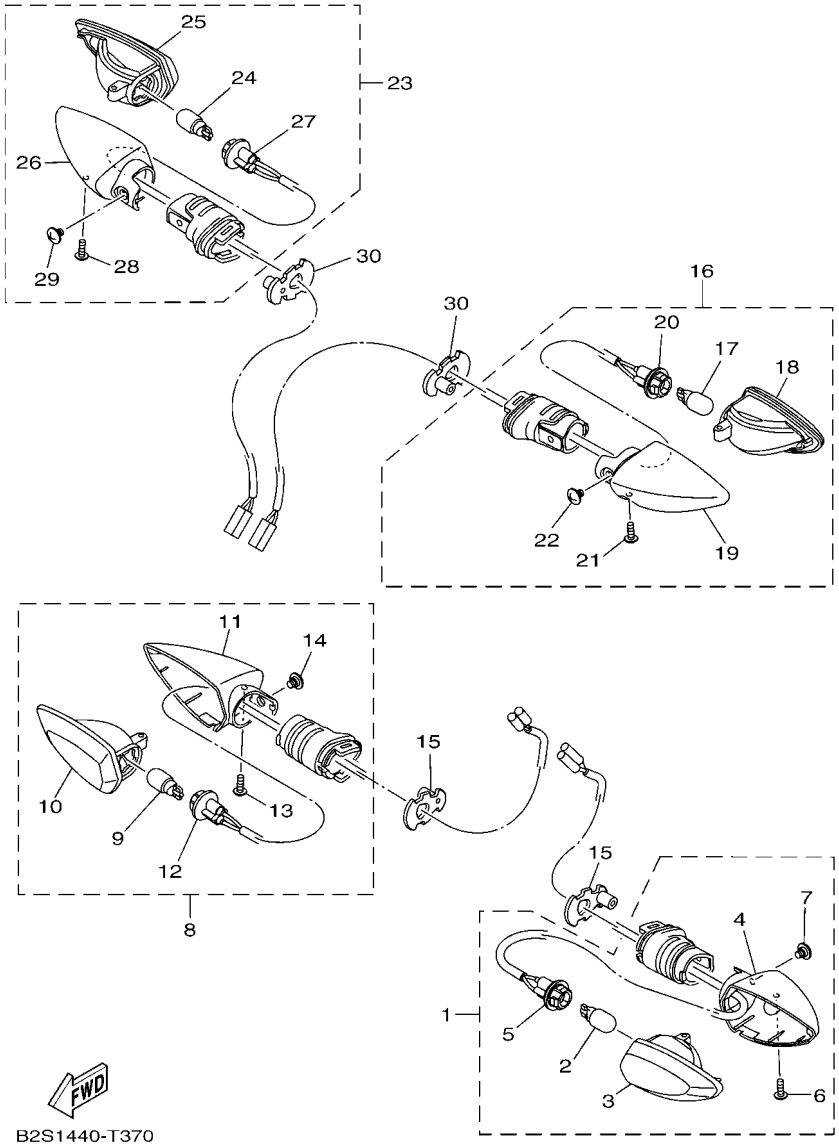

FIG. 37 FLASHER LIGHT

REF. NO.	PART NO.	DESCRIPTION	B2S2					REMARKS
1	B2S–H3310–00	FRONT FLASHER LIGHT ASSY 1	1					
2	55D–H3311–00	.BULB, FLASHER (12V-10W)	1					
3	55D–H334A–00	.LENS COMP 2	1					
4	55D–H332M–00	.BODY 2	1					
5	B2S–H331E–00	.CORD ASSY	1					
6	55D–H3333–00	.SCREW, LENS FITTING	1					
7	55D–H3358–00	.SCREW, SPECIAL	1					
8	B2S–H3320–00	FRONT FLASHER LIGHT ASSY 2	1					
9	55D–H3311–00	.BULB, FLASHER (12V-10W)	1					
10	55D–H333A–00	.LENS COMP 1	1					
11	55D–H3323–00	.BODY	1					
12	B2S–H332E–00	.CORD ASSY	1					
13	55D–H3333–00	.SCREW, LENS FITTING	1					
14	55D–H3358–00	.SCREW, SPECIAL	1					
15	1VP–H3318–00	STAY, FLASHER 1	2					
16	B2S–H3330–00	REAR FLASHER LIGHT ASSY 1	1					
17	55D–H3311–00	.BULB, FLASHER (12V-10W)	1					
18	55D–H333A–00	.LENS COMP 1	1					
19	55D–H3323–00	.BODY	1					
20	B2S–H333E–00	.CORD ASSY	1					
21	55D–H3333–00	.SCREW, LENS FITTING	1					
22	55D–H3358–00	.SCREW, SPECIAL	1					
23	B2S–H3340–00	REAR FLASHER LIGHT ASSY 2	1					
24	55D–H3311–00	.BULB, FLASHER (12V-10W)	1					
25	55D–H334A–00	.LENS COMP 2	1					
26	55D–H332M–00	.BODY 2	1					
27	B2S–H334E–00	.CORD ASSY	1					

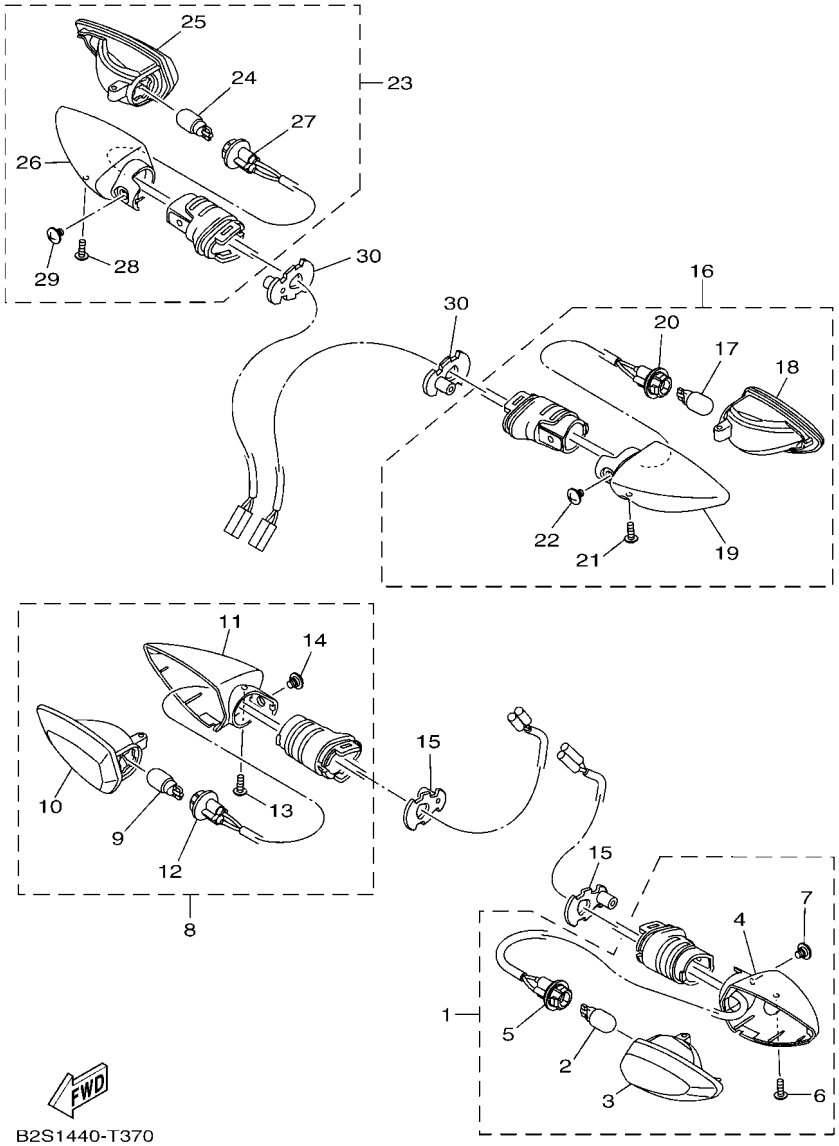

FIG. 37 FLASHER LIGHT

REF. NO.	PART NO.	DESCRIPTION	B2S2					REMARKS
28	55D–H3333–00	.SCREW, LENS FITTING	1					
29	55D–H3358–00	.SCREW, SPECIAL	1					
30	1VP–H3318–00	STAY, FLASHER 1	2					

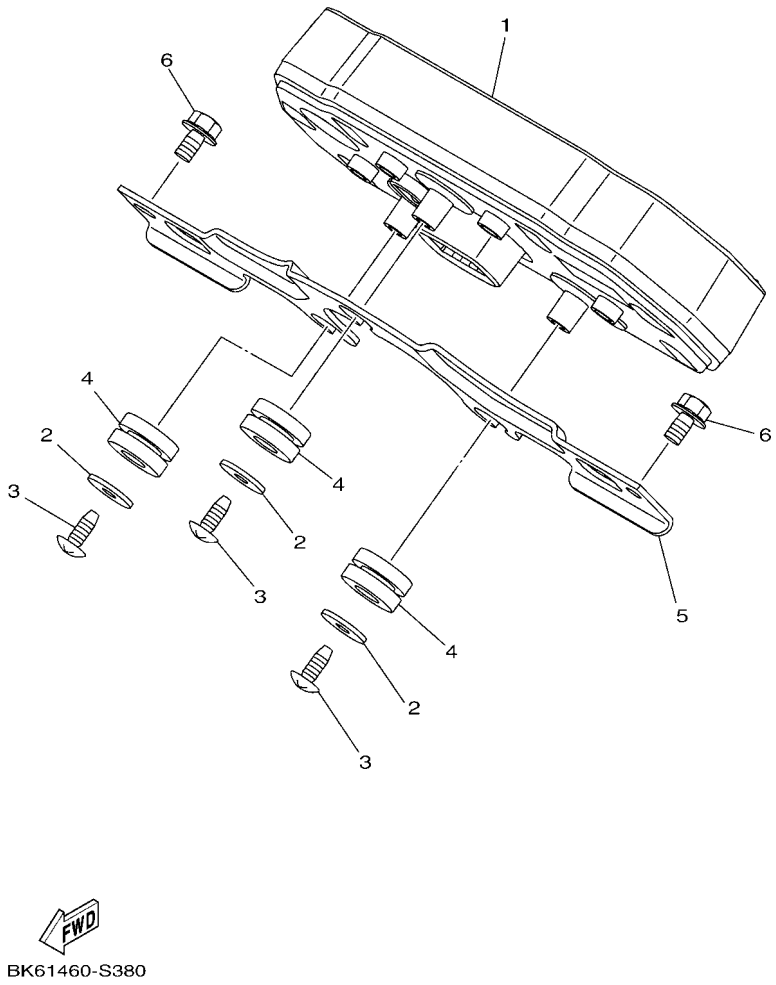

FIG. 38 METER

REF. NO.	PART NO.	DESCRIPTION	B2S2					REMARKS
1	BK6–H3500–01	METER ASSY	1					
2	90201–05036	WASHER, PLATE	3					
3	97702–50014	SCREW, TAPPING	3					
4	90480–14004	GROMMET	3					
5	BK6–H3519–00	BRACKET, METER	1					
6	95D02–06010	BOLT, FLANGE DEEP RECESS	2					

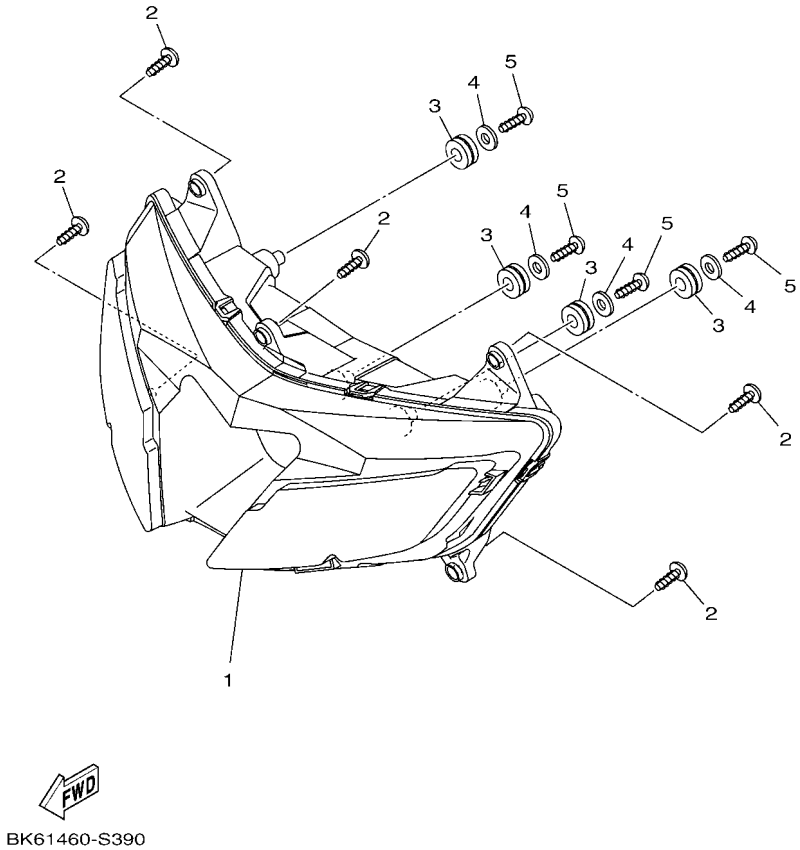

FIG. 39 HEADLIGHT

REF. NO.	PART NO.	DESCRIPTION	B2S2					REMARKS
1	BK6–H4300–00	HEADLIGHT ASSY	1					
2	90160–05012	SCREW, ROUND TAPPING	5					
3	90480–14229	GROMMET	4					
4	90201–05036	WASHER, PLATE	4					
5	97702–50016	SCREW, TAPPING	4					

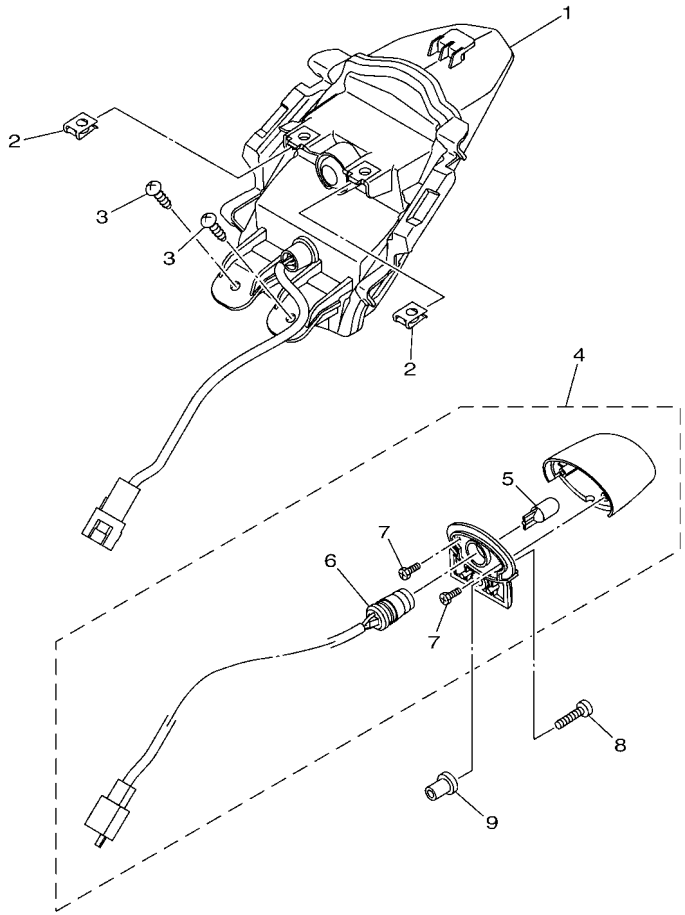

BK63460-T400

FIG. 40 TAILLIGHT

REF. NO.	PART NO.	DESCRIPTION	B2S2					REMARKS
1	BK7–H4710–00	TAILLIGHT UNIT ASSY	1					
2	90183–05807	NUT, SPRING	2					
3	97702–50016	SCREW, TAPPING	2					
4	BK6–H4740–00	LICENCE LIGHT ASSY	1					
5	1WD–H4744–00	.BULB (12V-5W)	1					
6	BK6–H4547–00	.CORD, LICENCE LIGHT	1					
7	1CK–H4726–00	.SCREW	2					
8	98907–04020	SCREW, BIND	1					
9	90179–04003	NUT	1					

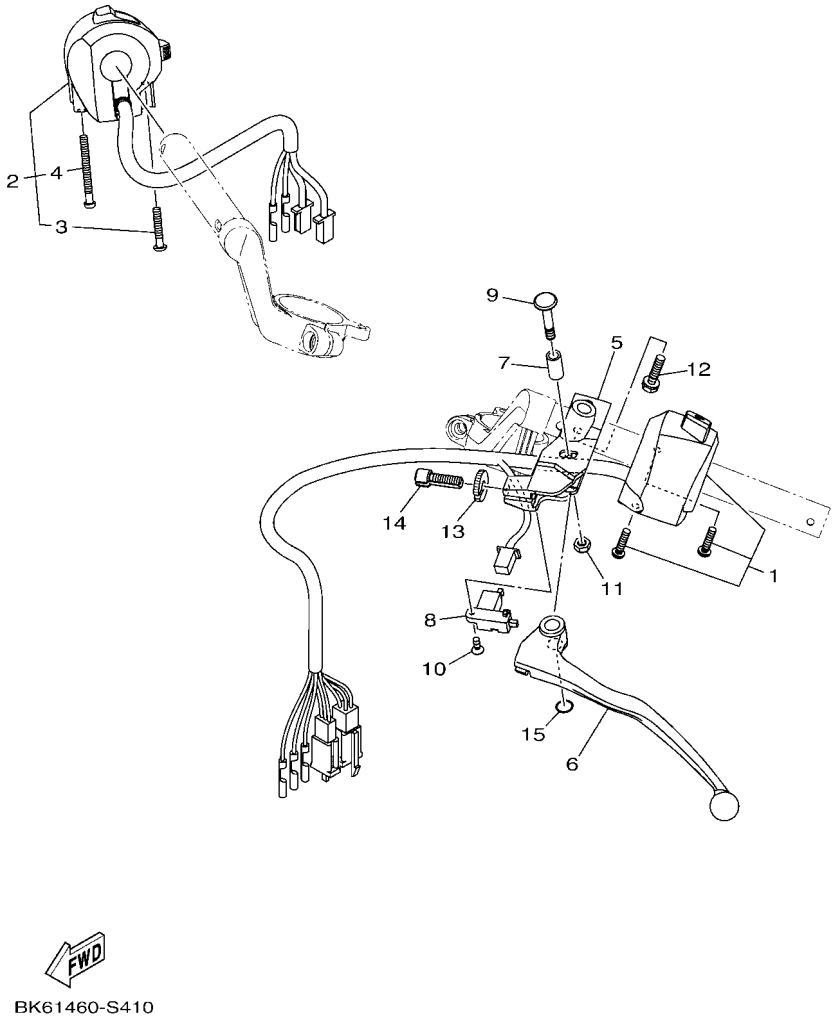

FIG. 41 HANDLE SWITCH & LEVER

REF. NO.	PART NO.	DESCRIPTION	B2S2					REMARKS
1	BK6–H3972–00	SWITCH, HANDLE 4	1					
2	BK6–H3963–00	SWITCH, HANDLE 3	1					
3	45P–H2133–00	.SCREW, FITTING	1					
4	45P–H395W–00	.SCREW, SWITCH FITTING	1					
5	3KA–H2911–00	HOLDER, LEVER 1	1					
6	2TP–H3912–00	LEVER 1	1					
7	3KA–H3913–00	COLLAR, LEVER 1	1					
8	5BP–H2917–00	SWITCH	1					
9	3KA–H3945–00	BOLT, LEVER	1					
10	90151–03005	SCREW, COUNTERSUNK	1					
11	95602–06100	NUT, SELF-LOCKING	1					
12	97507–06525	BOLT, WITH WASHER	1					
13	90179–08148	NUT	1					
14	90123–08046	BOLT	1					
15	93210–108H5	O-RING	1					

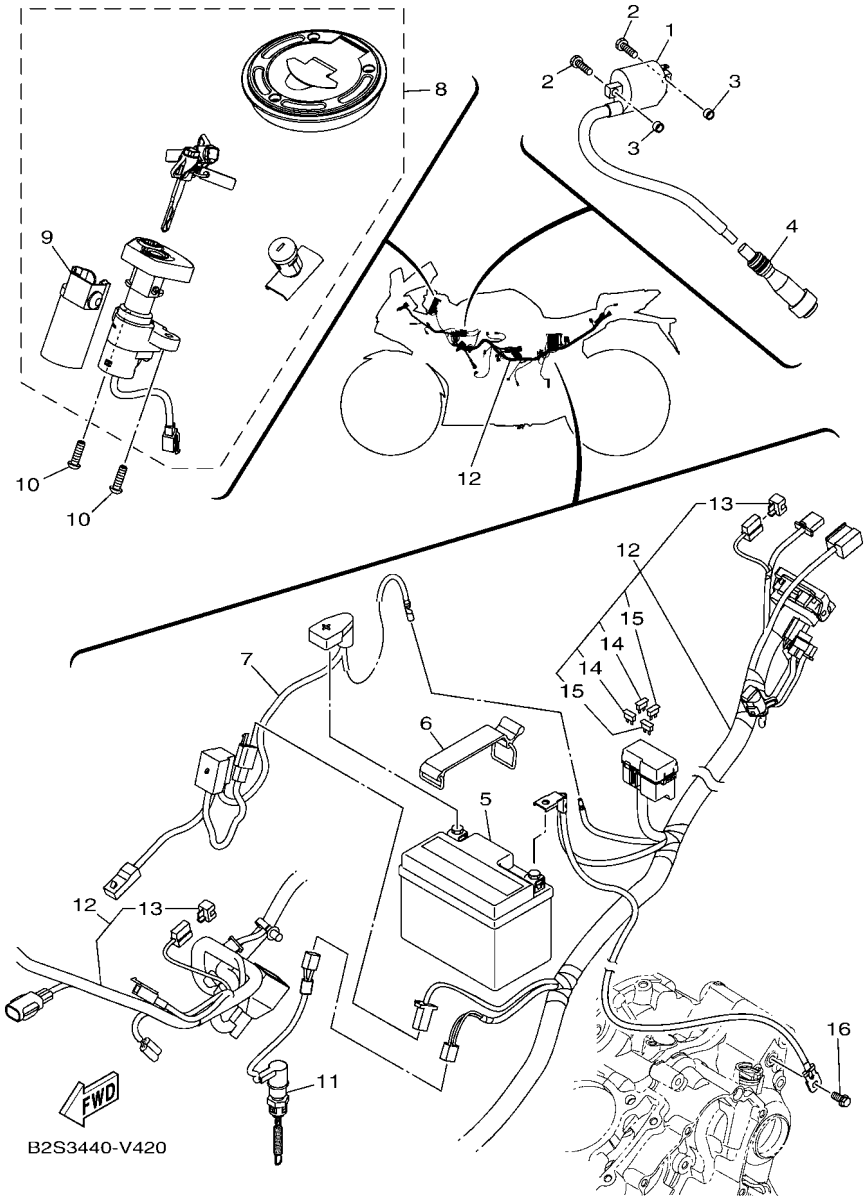

FIG. 42 ELECTRICAL 1

REF. NO.	PART NO.	DESCRIPTION	B2S2					REMARKS
1	2UP–H2310–00	IGNITION COIL ASSY	1					
2	97080–06020	BOLT	2					
3	90387–06M30	COLLAR	2					
4	BK6–H2370–00	PLUG CAP ASSY	1					
5	14D–H2100–10	BATTERY ASSY (GS GZ4V)	1					UR
	14D–H2100–00	BATTERY ASSY (YUASA YTZ4V)	1					UR
6	3C1–H2131–00	BAND, BATTERY	1					
7	BK6–H2115–00	WIRE, PLUS LEAD	1					
8	BK6–XH250–01	MAIN SW. STRG. LOCK SUB ASSY	1					
9	BK6–H2568–00	.COVER, MAIN SWITCH	1					
10	90111–06177	BOLT,HEX. SOCKET BUTTON	2					
11	B2S–H2530–00	STOP SWITCH ASSY	1					
12	B2S–H2590–00	WIRE HARNESS ASSY	1					
13	3WP–81980–00	.DIODE ASSY	2					
14	B65–H2151–10	.FUSE (15A)	2					
15	B65–H2151–80	.FUSE (2A)	2					
16	95022–06012	BOLT, FLANGE	1					

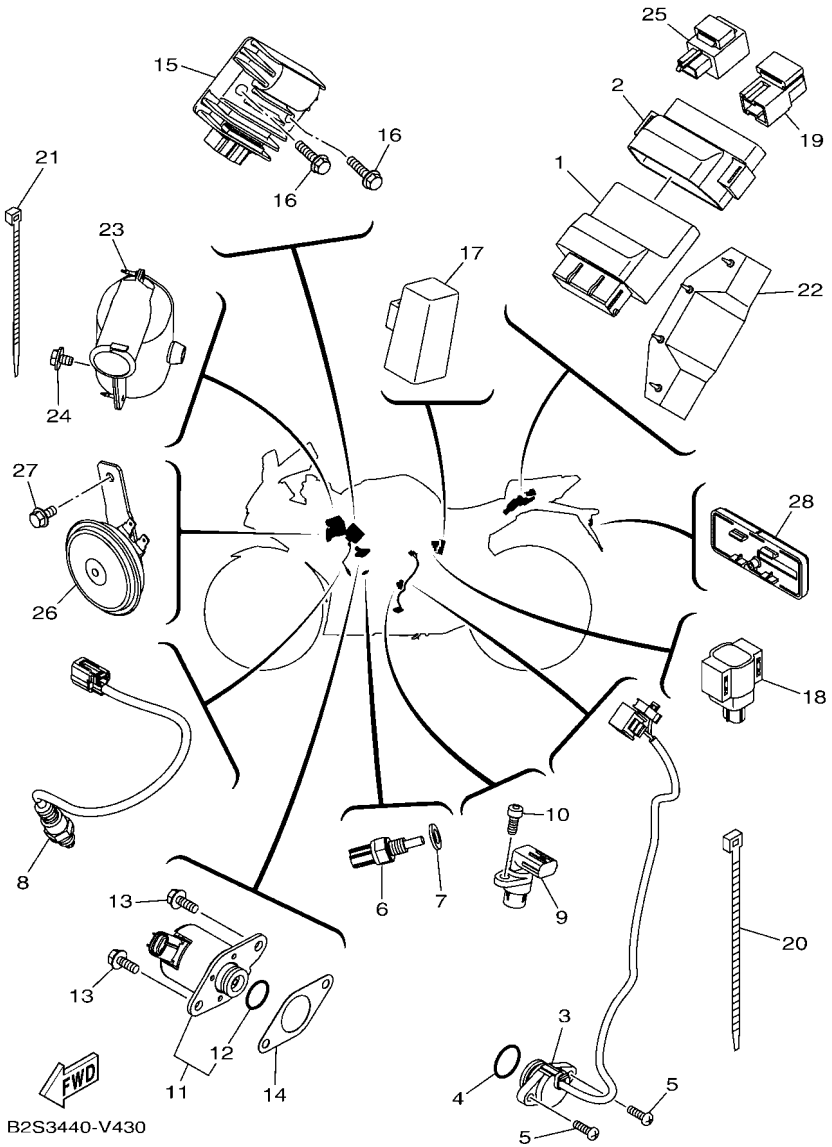

FIG. 43 ELECTRICAL 2

REF. NO.	PART NO.	DESCRIPTION	B2S2					REMARKS
1	BK6–H591A–00	ENGINE CONTROL UNIT ASSY	1					
2	BK6–H5546–00	BAND	1					
3	BK6–H2540–01	NEUTRAL SWITCH ASSY	1					
4	93210–21801	O-RING	1					
5	98502–05016	SCREW,PAN HEAD	2					
6	54P–H3591–00	THERMO UNIT	1					
7	90430–10804	GASKET	1					
8	2DP–H592A–20	SENSOR, OXYGEN	1					
9	B48–H3755–01	SENSOR, SPEED	1					
10	91312–06014	BOLT, HEXAGON SOCKET HEAD	1					
11	BK6–H6110–00	SOLENOID	1					
12	BK6–H1847–00	.O-RING	1					
13	95D32–06016	BOLT, FLANGE DEEP RECESS	2					
14	BK6–H1861–00	GASKET	1					
15	BK6–H1960–00	RECTIFIER & REGULATOR ASSY	1					
16	95D02–06025	BOLT, FLANGE DEEP RECESS	2					
17	5TP–H1940–00	STARTER RELAY ASSY	1					
18	1PA–H2576–00	SENSOR, LEAN ANGLE	1					
19	BK6–H1950–00	RELAY ASSY	1					
20	90464–50800	CLAMP	6					
21	90464–36800	CLAMP	5					
22	1CK–H2599–01	COVER, CONNECTOR	1					
23	20P–H246B–02	COVER 1	1					
24	90119–06054	BOLT, WITH WASHER	1					
25	3XV–83350–22	FLASHER RELAY ASSY	1					
26	BK6–H3371–10	HORN	1					
27	95D32–06012	BOLT, FLANGE DEEP RECESS	1					

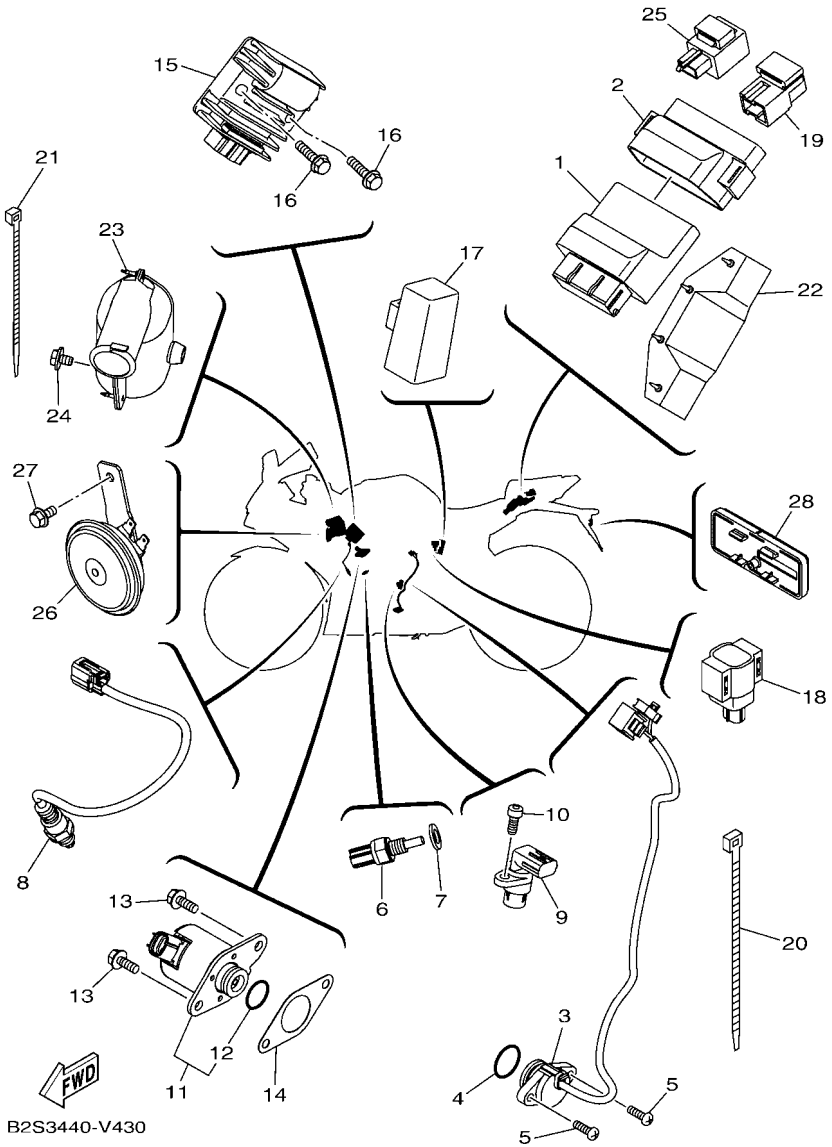

FIG. 43 ELECTRICAL 2

REF. NO.	PART NO.	DESCRIPTION	B2S2					REMARKS
28	55D–H5130–00	REAR REFLECTOR ASSY	1					

PART NO.	REF. NO.
52S–12439–00	6 – 2
3AH–22222–00	22 – 22
31A–23125–31	22 – 7
	22 – 29
31A–23149–31	22 – 6
	22 – 28
3R4–23153–00	22 – 4
	22 – 26
4V4–23188–L0	22 – 18
	22 – 35
5VC–23462–00	22 – 38
5XT–25802–50	28 – 5
3JD–25803–50	28 – 6
5XT–25827–00	28 – 15
36Y–2589H–00	30 – 6
3SP–25919–51	28 – 9
3SP–25924–51	28 – 13
3SP–25926–51	28 – 12
5BU–27234–00	32 – 15
3WP–81980–00	42 – 13
3XV–83350–22	43 – 25
BK6–E1102–00	1 – 1
2DP–E111F–00	4 – 9
2DP–E1133–10	1 – 2
BK6–E1165–00	1 – 8
BK7–E1166–00	8 – 27
BK6–E1169–00	1 – 9
2DP–E1181–00	1 – 20
BK7–E1185–00	5 – 5
BK6–E1191–00	1 – 7
B3F–E1193–00	1 – 15
2DP–E1311–10	1 – 24
BK6–E132G–00	1 – 13
BK6–E1351–00	1 – 25
BK6–E1361–00	1 – 16
BK6–E1362–00	1 – 17
BK6–E1400–00	2 – 1
BK6–E1412–00	2 – 2
BK6–E1422–00	2 – 5
BK7–E1454–00	2 – 21
21C–E1496–20	2 – 16
BK6–E1531–00	2 – 22
BK6–E1536–00	2 – 15
BK6–E1549–00	2 – 7
BK6–E1557–00	3 – 10
BK6–E1603–00	2 – 14
BK6–E1631–00	2 – 11
2DP–E1633–00	2 – 12

PART NO.	REF. NO.
BK6–E1651–00	2 – 4
BK6–E1681–00	2 – 6
BK6–E2111–00	3 – 1
B63–E2113–00	3 – 4
2DP–E2117–00	3 – 6
5TL–E2118–00	3 – 5
54P–E2119–00	3 – 3
BK6–E2121–00	3 – 2
50C–E2126–00	3 – 7
BK6–E2150–00	3 – 8
21C–E2156–00	4 – 1
5YP–E2157–01	4 – 8
BK6–E2160–00	3 – 13
BK6–E2166–00	3 – 9
BK6–E2170–01	4 – 3
2ND–E2210–20	4 – 16
BK6–E2213–00	4 – 17
BK6–E2226–00	3 – 11
54P–E2228–00	4 – 14
B65–E2231–00	4 – 12
BK6–E2241–00	4 – 13
BK6–E2256–00	4 – 15
BK6–E2279–00	3 – 12
BK6–E2280–00	4 – 6
BK6–E2288–00	4 – 7
BK6–E2405–00	6 – 8
BK6–E2410–00	6 – 1
BK6–E2420–00	5 – 1
BK7–E2422–00	5 – 2
2DP–E2428–00	5 – 4
BK7–E2435–00	5 – 10
BK7–E2443–00	5 – 13
BK7–E2450–00	5 – 6
BK6–E2460–00	6 – 7
BK6–E2467–00	6 – 17
BK6–E246E–00	6 – 23
BK6–E2481–00	6 – 18
BK6–E2482–00	6 – 20
BK6–E2483–00	6 – 4
5P0–E2590–00	6 – 11
BK7–E2615–00	5 – 9
5YP–E2671–00	6 – 10
5YP–E2675–00	6 – 9
BK7–E2842–00	5 – 7
BK6–E3300–00	7 – 1
2PV–E3324–00	7 – 8
3C1–E3327–00	7 – 13
38B–E3411–00	7 – 4

PART NO.	REF. NO.
38B–E3440–00	7 – 7
2PK–E3447–00	7 – 9
BK7–E3516–00	5 – 11
2FB–E3556–00	8 – 10
BK6–E3557–00	8 – 11
BK6–E3585–00	8 – 1
BK6–E3750–00	8 – 14
BK6–E3761–00	8 – 5
BK6–E3767–00	8 – 13
BK6–E3770–00	8 – 4
BK6–E3907–00	23 – 17
54P–E3938–00	8 – 8
BK6–E3971–00	23 – 22
54P–E4137–00	8 – 9
54P–E4147–00	8 – 6
5CA–E4147–00	8 – 7
BK6–E4199–00	8 – 2
BK6–E4411–01	8 – 16
BK6–E4412–00	8 – 17
BK6–E441J–00	8 – 24
5TL–E443E–00	8 – 22
BK6–E4450–00	8 – 18
BK6–E4452–00	8 – 20
BK6–E4453–00	8 – 19
BK7–E4613–00	9 – 5
BK6–E4703–10	9 – 1
BK6–E4718–00	9 – 2
BK6–E4747–00	31 – 34
BK6–E4799–00	9 – 3
2PV–E5113–00	11 – 9
BK6–E5150–00	10 – 1
1S7–E5351–00	7 – 3
BK6–E5362–00	11 – 17
BK6–E5411–00	11 – 1
BK6–E5418–00	11 – 10
BK6–E5421–00	11 – 12
BK6–E5441–00	4 – 18
BK6–E5451–00	11 – 2
BK6–E5461–00	11 – 13
B48–E5514–00	12 – 1
BK7–E5521–00	12 – 2
2PV–E5524–10	12 – 3
2TP–E5580–00	12 – 6
3C1–E6111–00	13 – 1
54B–E6144–00	13 – 20
BK6–E6150–00	13 – 5
2ND–E6154–00	13 – 6
38B–E6193–00	13 – 2

PART NO.	REF. NO.
2ND–E6321–00	13 – 8
BK6–E6321–00	13 – 10
BK6–E6324–00	13 – 12
BK6–E6325–00	13 – 11
BK6–E6331–00	13 – 9
BK6–E6333–00	13 – 14
BK6–E6337–00	13 – 17
3C1–E6344–00	13 – 21
BK6–E6345–00	13 – 25
BK6–E6351–00	13 – 13
BK6–E6352–00	13 – 16
3C1–E6356–10	13 – 19
1PA–E6357–00	13 – 26
3C1–E6358–00	13 – 18
BK6–E6371–00	13 – 7
BK7–E6380–00	13 – 24
BK6–E6774–00	13 – 15
3C1–E7121–00	14 – 7
5D7–E7131–00	14 – 5
BK6–E7151–00	14 – 2
BK6–E7161–00	14 – 6
3C1–E7211–00	14 – 13
BK6–E7221–00	14 – 21
BK6–E7231–00	14 – 19
BK6–E7241–00	14 – 18
BK6–E7251–00	14 – 15
5D7–E7261–00	14 – 20
BK6–E7411–00	14 – 1
BK6–E7421–00	14 – 12
1S7–E7456–00	14 – 29
3C1–E7471–00	14 – 10
38B–E8101–00	16 – 4
BK7–E8110–00	16 – 9
BK7–E8112–00	16 – 14
20P–E8113–00	16 – 10
BK7–E8115–00	16 – 11
BK6–E8140–00	16 – 1
BK6–E8337–00	16 – 3
2ND–E8511–00	15 – 4
2ND–E8512–00	15 – 5
2ND–E8513–00	15 – 6
1PA–E8531–00	15 – 7
BK6–E8540–00	15 – 1
5TP–E8542–00	15 – 2
BK6–F1110–12	17 – 1
BK6–F112C–00	17 – 10
BK6–F112D–00	17 – 11
BK6–F117V–00	34 – 26

PART NO.	REF. NO.
BK6–F117W–00	34 – 37
1WD–F1278–00	34 – 48
3C1–F1338–00	6 – 22
BK6–F135F–00	20 – 2
BK6–F144G–10	31 – 31
BK6–F1511–00–P0	18 – 1
BK6–F1511–00–P4	18 – 1
B17–F1568–00	23 – 45
BK6–F160E–00	18 – 20
BK6–F1611–00	18 – 5
BK6–F1613–00	18 – 15
BK6–F1617–00	18 – 13
BK6–F1629–01	18 – 10
BK6–F162R–00–P2	18 – 9
BK6–F162R–00–P5	18 – 9
BK6–F162R–00–P6	18 – 9
B2S–F1641–00	18 – 27
BK6–F1650–00	20 – 21
BK6–F1653–00	18 – 25
B92–F1668–00	20 – 26
BK6–F1711–00	19 – 1
45P–F1717–00	19 – 2
	19 – 9
BK6–F171E–00	19 – 21
BK6–F171X–00	19 – 23
BK6–F1721–00	19 – 8
BK6–F172G–00–P0	34 – 13
BK6–F172G–00–P4	34 – 13
BK6–F172G–00–P5	34 – 13
BK6–F172H–00–P0	34 – 15
BK6–F172H–00–P4	34 – 15
BK6–F172H–00–P5	34 – 15
BK6–F1731–00–P2	19 – 15
BK6–F1731–00–P5	19 – 15
BK6–F1731–00–P6	19 – 15
B2S–F173E–30	19 – 40
B2S–F173E–40	19 – 41
B2S–F173E–50	19 – 41
B2S–F173F–30	19 – 42
B2S–F173F–40	19 – 42
BK6–F1741–00–P2	19 – 18
BK6–F1741–00–P5	19 – 18
BK6–F1741–00–P6	19 – 18
BK6–F1817–00	19 – 28
BK6–F1871–00	19 – 26
1S7–F1875–01	19 – 27
BK6–F1946–00	17 – 2
BK6–F2110–00	20 – 1

PART NO.	REF. NO.
2PK–F2128–00	20 – 5
BK6–F2141–00	20 – 6
BK6–F2151–00	20 – 8
2PK–F217A–00	20 – 11
2PK–F217F–00	20 – 15
BK6–F2184–00	20 – 4
BK6–F2210–00	20 – 25
BK6–F2311–00	20 – 18
BK6–F2327–10	17 – 9
BK6–F247A–00	19 – 29
BK6–F3102–10	22 – 1
BK6–F3103–10	22 – 19
BK6–F3110–00	22 – 2
BK6–F3111–00	22 – 17
	22 – 34
BK6–F3117–00	22 – 14
BK6–F3118–00	22 – 15
BK6–F3120–00	22 – 20
BK6–F3126–10	22 – 9
	22 – 31
BK6–F3141–00	22 – 13
	22 – 23
B48–F3144–00	22 – 3
	22 – 25
BK6–F3145–00	22 – 5
	22 – 27
2BU–F3158–00	22 – 11
BK6–F3170–00	22 – 10
BK6–F3171–00	22 – 8
	22 – 30
31B–F3181–00	22 – 12
BK6–F319U–00	22 – 24
BK6–F330G–00	22 – 21
BK6–F332K–00	22 – 32
BK6–F3340–00	22 – 36
BK6–F3357–00	22 – 16
BK6–F3393–00	22 – 33
4FP–F3411–20	21 – 2
4FP–F3412–10	21 – 3
5BP–F3416–10	21 – 5
1PA–F3418–00	21 – 8
5VL–F341E–10	21 – 4
BK6–F3435–00	21 – 9
20P–F3469–00	29 – 5
	34 – 25
5BP–F3873–01	21 – 1
5BP–F3875–00	22 – 37
BK6–F4110–00	23 – 1

PART NO.	REF. NO.
BK6–F4129–00–P0	23 – 29
BK6–F4129–00–P5	23 – 29
BK6–F4129–00–P6	23 – 29
BK6–F412Y–00	23 – 2
BK6–F4139–00–P0	23 – 37
BK6–F4139–00–P5	23 – 37
BK6–F4139–00–P6	23 – 37
B74–F414B–10	23 – 46
	23 – 47
BK6–F414E–00	23 – 36
	23 – 44
BK6–F414G–00	23 – 28
54P–F414G–10	23 – 20
5D9–F414G–10	23 – 13
BK6–F4181–00	23 – 3
BK8–F4188–00	23 – 14
BK6–F4191–00	23 – 8
BK6–F41B1–00–P3	23 – 25
BK6–F41B1–00–P4	23 – 25
BK6–F41B1–00–P5	23 – 25
BK7–F4312–00	23 – 23
BK6–F4491–00	23 – 19
BK7–F4710–00	24 – 1
BK6–F4728–00	24 – 3
4LS–F4741–00	24 – 2
	24 – 9
55C–F4742–00	32 – 20
BK7–F4750–00	24 – 8
BK6–F475H–00	24 – 6
BK6–F475J–00	24 – 12
BK6–F475X–00	24 – 10
BK6–F4796–00	24 – 5
21C–F510C–10	25 – 2
BK6–F5168–00–0X	25 – 1
BK6–F5168–00–1X	25 – 1
BK6–F5168–00–P0	25 – 1
BK6–F5181–00	25 – 8
1CK–F5186–00	25 – 7
B97–F530S–00	27 – 2
BK6–F5338–00–0X	27 – 1
BK6–F5338–00–1X	27 – 1
BK6–F5338–00–P0	27 – 1
B97–F5364–00	27 – 4
BK6–F5366–00	27 – 6
B97–F5376–00	27 – 9
B97–F5377–00	27 – 17
5BP–F5381–00	27 – 16
B97–F5383–00	27 – 18

PART NO.	REF. NO.
1CK–F5388–00	27 – 21
BK6–F5414–00	27 – 13
BK6–F5448–00	27 – 10
3C1–F5802–00	26 – 4
3C1–F5803–50	26 – 5
3C1–F5805–10	26 – 12
B97–F5806–00	28 – 4
B97–F5808–00	32 – 2
BK6–F580E–00	32 – 1
B48–F580U–01	26 – 3
B97–F580W–00	28 – 3
5HH–F5824–00	28 – 10
5HH–F5825–51	28 – 14
50C–F582A–50	32 – 5
BK6–F582U–00	26 – 1
BK6–F582W–00	28 – 1
45P–F583T–01	30 – 2
3C1–F5852–00	30 – 5
BK6–F5852–00	32 – 9
2VN–F5854–00	32 – 11
3RW–F5854–00	30 – 4
3C1–F5855–00	30 – 8
50C–F5855–00	32 – 10
50C–F5866–00	32 – 6
3RW–F5867–00	30 – 7
BK6–F5872–00	30 – 1
BK6–F5873–00	32 – 24
BK6–F5876–00	30 – 19
BK6–F587A–00	20 – 24
BK6–F5886–00	30 – 17
BK6–F5887–00	30 – 21
50C–F5888–00	32 – 22
50C–F5894–11	32 – 8
BK6–F5895–00	32 – 13
50C–F589A–00	32 – 14
5HH–F5914–00	28 – 11
5HH–F5917–00	28 – 8
5YP–F5917–00	26 – 8
5P0–F5919–01	26 – 10
5YP–F5924–00	26 – 11
5YP–F5925–01	26 – 9
5HH–F5937–00	28 – 7
5YP–F5937–00	26 – 7
5YP–F5939–00	26 – 13
BK6–F6121–00	29 – 1
BK6–F6122–00	29 – 2
1S7–F622F–00	29 – 11
1S7–F622H–00	29 – 10

PART NO.	REF. NO.
BK7–F6240–00	29 – 6
20P–F6241–00	29 – 7
BK7–F6246–00	29 – 8
1S7–F6257–00	29 – 9
55C–F6259–00	32 – 21
BK7–F6280–00	34 – 19
BK7–F6290–00	34 – 20
BK6–F6311–00	29 – 13
BK6–F6312–00	29 – 14
BK6–F6315–00	29 – 15
BK6–F6335–00	29 – 17
3RS–F6372–00	29 – 18
BK7–F7211–00	31 – 26
50C–F7222–00	32 – 4
45P–F7261–00	31 – 30
BK6–F7311–00	31 – 1
BK6–F7404–10	31 – 19
BK6–F7410–00	31 – 9
5BP–F7411–00	31 – 11
BK6–F741L–00	31 – 44
BK6–F742L–00	31 – 45
45P–F7431–00	31 – 36
1WD–F7437–00	31 – 40
45P–F7441–00	31 – 37
BK6–F7442–00	31 – 8
BK6–F7443–00	31 – 20
20P–F7451–00	31 – 10
20P–F7461–00	31 – 21
B2S–F7473–00	31 – 42
BK6–F8100–00	17 – 12
BK6–F8283–00	19 – 32
BK6–F8284–00	19 – 33
28D–F834E–00	18 – 11
BK6–F8351–00–P0	34 – 3
BK6–F8351–00–P4	34 – 3
BK6–F8351–00–P5	34 – 3
BK6–F8356–00	34 – 17
BK6–F835G–00	34 – 7
BK6–F835U–00–P1	33 – 1
BK6–F835U–00–P5	33 – 1
BK6–F835U–00–P6	33 – 1
BK6–F835V–00–P1	33 – 4
BK6–F835V–00–P5	33 – 4
BK6–F835V–00–P6	33 – 4
BK6–F836K–00	33 – 23
BK6–F836L–00	33 – 27
BK6–F836M–00	33 – 31
BK6–F837L–00	33 – 7

PART NO.	REF. NO.
BK6–F837M–00	33 – 10
BK6–F837V–01	34 – 34
BK6–F837W–01	34 – 45
BK6–F8381–00	34 – 1
BK6–F8385–00–P3	33 – 13
BK6–F8385–00–P4	33 – 13
B2S–F8393–30	34 – 49
B2S–F8393–40	34 – 49
B2S–F8393–50	34 – 49
B2S–F8394–30	34 – 50
BK6–F8395–00–P3	33 – 18
BK6–F8395–00–P4	33 – 18
B2S–F8398–30	33 – 34
B2S–F839A–30	33 – 35
B2S–F839A–40	33 – 35
B2S–F839A–50	33 – 35
B2S–F839E–30	33 – 36
B2S–F839E–40	33 – 36
B2S–F839E–50	33 – 36
BK6–F8417–00	19 – 34
BK6–F841F–00	19 – 37
BK6–F8483–00	34 – 21
BK6–F8484–00	34 – 22
BK6–H1410–02	35 – 2
2PV–H1450–01	35 – 1
BK6–H1800–00	36 – 1
2PH–H1801–10	36 – 2
5D9–H1828–00	36 – 5
1FD–H183G–00	36 – 3
BK6–H1847–00	43 – 12
5D9–H1861–00	36 – 4
BK6–H1861–00	43 – 14
5TP–H1940–00	43 – 17
BK6–H1948–00	18 – 18
BK6–H1950–00	43 – 19
BK6–H1960–00	43 – 15
14D–H2100–00	42 – 5
14D–H2100–10	42 – 5
BK6–H2115–00	42 – 7
3C1–H2131–00	42 – 6
45P–H2133–00	41 – 3
B65–H2151–10	42 – 14
B65–H2151–80	42 – 15
2UP–H2310–00	42 – 1
BK6–H2370–00	42 – 4
20P–H246B–02	43 – 23
B2S–H2530–00	42 – 11
BK6–H2540–01	43 – 3

PART NO.	REF. NO.
BK6–H2568–00	42 – 9
1PA–H2576–00	43 – 18
B2S–H2590–00	42 – 12
1CK–H2599–01	43 – 22
3KA–H2911–00	41 – 5
5BP–H2917–00	41 – 8
B2S–H3310–00	37 – 1
55D–H3311–00	37 – 2
	37 – 9
	37 – 17
	37 – 24
1VP–H3318–00	37 – 15
	37 – 30
B2S–H331E–00	37 – 5
B2S–H3320–00	37 – 8
55D–H3323–00	37 – 11
	37 – 19
B2S–H332E–00	37 – 12
55D–H332M–00	37 – 4
	37 – 26
B2S–H3330–00	37 – 16
55D–H3333–00	37 – 6
	37 – 13
	37 – 21
	37 – 28
55D–H333A–00	37 – 10
	37 – 18
B2S–H333E–00	37 – 20
B2S–H3340–00	37 – 23
55D–H334A–00	37 – 3
	37 – 25
B2S–H334E–00	37 – 27
55D–H3358–00	37 – 7
	37 – 14
	37 – 22
	37 – 29
BK6–H3371–10	43 – 26
BK6–H3500–01	38 – 1
BK6–H3519–00	38 – 5
54P–H3591–00	43 – 6
B48–H3755–01	43 – 9
2TP–H3912–00	41 – 6
3KA–H3913–00	41 – 7
38B–H3922–00	30 – 9
3AY–H3936–00	18 – 26
	30 – 20
3KA–H3945–00	41 – 9
45P–H395W–00	41 – 4

PART NO.	REF. NO.
BK6–H3963–00	41 – 2
BK6–H3972–00	41 – 1
45P–H3980–00	30 – 12
BK6–H4300–00	39 – 1
BK6–H4547–00	40 – 6
BK7–H4710–00	40 – 1
1CK–H4726–00	40 – 7
BK6–H4740–00	40 – 4
1WD–H4744–00	40 – 5
2FC–H5111–00	18 – 31
55D–H5130–00	43 – 28
BK6–H5546–00	43 – 2
BK6–H5752–00	23 – 18
BK6–H591A–00	43 – 1
2DP–H592A–20	43 – 8
BK6–H6110–00	43 – 11
5P0–W0041–00	30 – 3
4C9–W0048–00	26 – 6
BK6–XH250–01	42 – 8
90101–08006	27 – 22
90105–06169	23 – 6
	23 – 11
90105–08002	34 – 18
90105–08180	31 – 46
90105–10006	21 – 11
90105–10886	17 – 7
90105–10887	20 – 14
90105–10888	31 – 3
90105–108B7	17 – 6
90109–05014	23 – 34
	23 – 42
90109–06202	18 – 23
90109–06220	19 – 31
90109–06279	16 – 2
90109–06577	30 – 10
90109–068B2	19 – 17
	19 – 20
	23 – 27
90109–086F8	31 – 15
	31 – 22
90110–05806	23 – 15
90110–06215	23 – 12
90110–06378	1 – 23
90110–06846	8 – 15
90110–06873	12 – 7
90110–08803	31 – 18
	31 – 35
90110–08839	23 – 7

PART NO.	REF. NO.
90110–10025	31 – 16
90111–05808	7 – 2
90111–06117	33 – 17
	33 – 22
	34 – 32
	34 – 43
90111–06137	18 – 4
90111–06177	42 – 10
90111–06807	9 – 4
90111–08089	26 – 2
	28 – 2
90116–08846	27 – 11
90119–05022	18 – 17
90119–06051	8 – 26
90119–06054	43 – 24
90119–06810	17 – 5
90123–08046	41 – 14
90149–05801	1 – 10
90149–08220	9 – 8
90149–10804	26 – 14
90150–05023	34 – 6
90151–03005	41 – 10
90159–05011	23 – 33
	23 – 41
90159–06817	18 – 7
	19 – 5
	19 – 12
90160–05012	39 – 2
90160–05812	19 – 4
	19 – 11
	33 – 3
	33 – 6
	33 – 9
	33 – 12
90170–10012	2 – 28
90170–14801	13 – 23
90173–06806	18 – 22
90179–04003	40 – 9
90179–05849	34 – 2
90179–08148	41 – 13
90179–10805	17 – 8
	20 – 16
90179–12808	13 – 4
90179–25615	21 – 6
90183–05067	34 – 36
	34 – 47
90183–050A7	18 – 12
90183–05807	18 – 6

PART NO.	REF. NO.
90183–05807	19 – 16
	19 – 19
	19 – 24
	23 – 26
	33 – 2
	33 – 5
	33 – 14
	33 – 19
	34 – 5
	34 – 11
	34 – 27
	34 – 38
	40 – 2
90201–05036	38 – 2
	39 – 4
90201–06078	18 – 30
90201–06880	6 – 14
90201–08066	32 – 17
90201–08612	9 – 7
90201–08859	1 – 18
90201–10021	31 – 28
90201–10118	30 – 16
	32 – 26
90201–12019	13 – 3
	35 – 6
90201–15814	27 – 20
90201–15821	2 – 17
90201–173F4	14 – 24
90201–173U5	31 – 17
90201–22793	14 – 22
90201–25290	12 – 5
90202–26142	21 – 7
90208–20003	13 – 31
90209–10020	21 – 12
90209–17285	14 – 3
90209–18208	14 – 16
90214–10800	2 – 18
90215–10803	2 – 27
90215–14802	13 – 22
90240–08005	32 – 16
90240–08145	31 – 24
90252–18800	16 – 13
90269–06816	18 – 8
	18 – 16
	18 – 24
	19 – 7
	19 – 14
	33 – 8

PART NO.	REF. NO.
90269–06816	33 – 11
	33 – 26
	33 – 30
	33 – 33
	34 – 33
	34 – 44
90280–03017	2 – 10
90282–05031	2 – 26
90338–09803	30 – 13
90340–12813	1 – 3
90340–14824	11 – 5
90340–32823	11 – 7
90387–06131	34 – 24
90387–06205	18 – 2
90387–064W3	6 – 15
90387–066J9	18 – 14
90387–06899	23 – 32
	23 – 40
	33 – 16
	33 – 21
	34 – 29
	34 – 40
90387–068B2	23 – 5
	23 – 10
90387–068C5	17 – 4
90387–068S1	20 – 9
	20 – 20
	20 – 23
90387–06M30	42 – 3
90387–08842	31 – 33
90387–10003	31 – 4
90387–10814	20 – 13
90387–15810	2 – 23
90387–17804	14 – 14
90401–10812	30 – 15
	32 – 25
90430–06014	1 – 5
	1 – 27
90430–10804	43 – 7
90445–19807	31 – 29
90445–21848	31 – 7
90450–27806	6 – 19
	6 – 21
90450–43805	8 – 30
90464–12036	34 – 30
	34 – 41
90464–36800	43 – 21
90464–50800	43 – 20

PART NO.	REF. NO.
90467–08003	19 – 30
90467–11825	8 – 29
90467–12052	8 – 28
90467–12085	32 – 12
90467–12800	8 – 23
90467–19803	6 – 5
90467–20804	8 – 25
90467–20806	6 – 6
90480–01558	18 – 21
	19 – 3
	19 – 10
	19 – 35
	19 – 38
	23 – 24
90480–01559	23 – 30
	23 – 38
	33 – 24
	33 – 28
90480–01803	6 – 16
90480–12805	18 – 3
	23 – 31
	23 – 39
90480–12808	33 – 15
	33 – 20
	34 – 28
	34 – 39
90480–13398	34 – 10
90480–13567	17 – 3
90480–14004	38 – 4
90480–14229	39 – 3
90480–15363	6 – 12
	23 – 4
	23 – 9
90501–06022	15 – 3
90501–06800	15 – 8
90501–12743	31 – 38
90501–16800	2 – 19
90501–18576	7 – 5
90506–26807	31 – 27
90506–28800	31 – 2
90508–183B9	31 – 12
90508–184B0	31 – 23
90508–32837	16 – 5
90520–02838	34 – 4
90520–10840	34 – 8
90520–10841	34 – 9
91312–05016	4 – 2
91312–06014	43 – 10

PART NO.	REF. NO.
91312–06016	35 – 4
91312–06020	8 – 3
91312–06025	35 – 3
91312–10040	22 – 39
91317–06020	29 – 4
91317–06030	29 – 12
	34 – 23
91317–08020	29 – 3
91332–05010	23 – 16
	23 – 21
91337–08030	21 – 10
91401–20012	32 – 18
91401–25015	31 – 14
	31 – 25
	31 – 43
91701–08035	31 – 13
91702–08042	31 – 41
91810–14809	1 – 21
	1 – 22
	10 – 2
	11 – 3
	11 – 14
92012–06010	31 – 32
92012–06016	20 – 10
	20 – 19
	20 – 22
92012–08020	32 – 19
92902–06200	16 – 12
92902–10600	31 – 5
93101–10843	11 – 19
93102–08800	1 – 14
93102–12862	13 – 29
93102–12891	16 – 8
93102–22827	14 – 27
93103–10801	5 – 3
93106–17801	20 – 17
93106–22808	25 – 3
	27 – 5
93106–26815	27 – 8
93210–09806	4 – 4
93210–108H5	41 – 15
93210–148F8	11 – 6
93210–15620	32 – 7
93210–19809	5 – 15
93210–198F9	11 – 18
93210–21801	43 – 4
93210–26805	36 – 6
93210–32816	11 – 8

PART NO.	REF. NO.
93210–34802	7 – 6
93210–39803	5 – 12
93210–54805	7 – 12
93306–000Y3	5 – 8
93306–001YJ	4 – 5
93306–054XC	27 – 7
93306–054XF	14 – 8
93306–203XK	2 – 24
	2 – 25
93306–252YN	14 – 9
93306–252YP	25 – 4
	27 – 3
93306–253X2	14 – 25
93306–272YC	14 – 26
93306–305X7	2 – 8
93306–305XV	2 – 9
93310–325YC	12 – 4
93310–526YT	2 – 3
93315–112Y8	13 – 28
93315–317Y1	20 – 12
93317–218Y1	20 – 3
93410–20038	14 – 4
93410–22039	14 – 17
	14 – 23
93450–16115	2 – 13
93501–04830	31 – 39
93505–16844	13 – 27
93505–16845	13 – 27
93604–08800	2 – 20
93608–30839	16 – 7
93822–14800	14 – 28
93900–00824	25 – 6
	27 – 15
94110–17823	25 – 5
94114–17802	27 – 14
94568–J9096	4 – 11
94668–K1021	27 – 25
94700–00439	1 – 19
95022–06010	1 – 4
	1 – 26
	14 – 30
95022–06012	7 – 14
	42 – 16
95022–06014	4 – 10
	18 – 28
	19 – 36
	19 – 39
95022–06016	11 – 11

PART NO.	REF. NO.
95022–06020	6 – 3
	7 – 10
95022–06025	4 – 19
	5 – 14
95022–06030	1 – 11
95022–06040	10 – 6
	11 – 4
	11 – 15
95022–06045	10 – 4
95022–06050	11 – 16
95022–06055	10 – 3
95022–06070	10 – 5
95022–06080	7 – 11
95022–06090	11 – 20
95022–08012	24 – 13
95027–06010	30 – 18
95302–08700	27 – 23
	32 – 3
95602–06100	30 – 11
	41 – 11
95602–06200	18 – 19
95602–08200	24 – 11
	27 – 12
95602–12200	20 – 7
95602–14200	25 – 9
	27 – 19
95607–06100	18 – 29
95607–06200	24 – 4
95612–08618	1 – 6
95612–10100	31 – 6
95702–08500	9 – 6
95702–12500	35 – 5
95707–05500	18 – 32
95812–06030	8 – 12
95D02–06010	38 – 6
95D02–06025	43 – 16
95D32–06012	43 – 27
95D32–06016	43 – 13
95D32–06025	6 – 13
95E32–06010	24 – 7
95E37–06025	30 – 14
97012–06020	16 – 15
97080–06020	42 – 2
97507–06525	41 – 12
97702–50012	19 – 6
	19 – 13
	19 – 25
	34 – 14

PART NO.	REF. NO.
97702–50012	34 – 16
97702–50014	38 – 3
97702–50016	23 – 35
	23 – 43
	34 – 12
	34 – 31
	34 – 35
	34 – 42
	34 – 46
	39 – 5
	40 – 3
97707–50012	19 – 22
97707–50016	33 – 25
	33 – 29
	33 – 32
97707–50025	8 – 21
98502–05016	43 – 5
98507–05012	29 – 16
98507–06025	32 – 23
98512–06012	14 – 11
98907–04020	40 – 8
99001–10600	16 – 6
99009–20500	13 – 30
99234–00180	33 – 37
	33 – 38
99236–00180	33 – 37
	33 – 38
99530–08012	1 – 12
9X568–K1127	27 – 24

PART NO.	REF. NO.

PART NO.	REF. NO.

PART NO.	REF. NO.

PART NO.	REF. NO.