YAMAHA

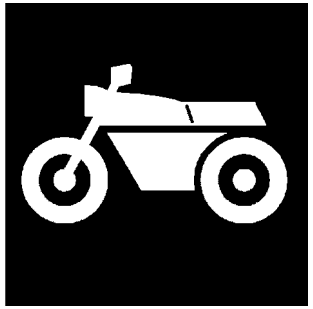

PARTS CATALOGUE

MT09 (B892) MALAYSIA

YAMAHA
GENUINE
Parts & Accessories

1RB89-440E1

( )

MT09
PARTS CATALOGUE
©2016 by Yamaha Motor Co., Ltd.
1st edition, February 2016
All rights reserved.
Any reprinting or unauthorized use
without the written permission of
Yamaha Motor Co., Ltd.
is expressly prohibited.
Printed in Japan.

FOREWORD

This Parts Catalogue is related to the parts for the model(s) on the cover page. When you are ordering replacement parts, please refer to this Parts Catalogue and quote both part numbers and part names correctly.

1. Modifications or additions which have been made after the issue of the Parts Catalogue will be announced in the Parts News.
   It is advisable that you make the necessary corrections to the Parts Catalogue according to the Parts News.

2. Abbreviations
   The following abbreviations are used in this Parts Catalogue.

   "UR" Use specified parts number.

   "UN" Use as many as needed.

   "AP" Alternate Parts

   "LM" Locally Made (Parts need to be ordered locally)

   "F#" Frame No. (Applicable machine No.)

   "O/S" Over Size

3. The number of components for assembly
   - Parts, which are to be supplied in an assembly, are listed with a dot (.) in front of the part name as shown below.
   - The numeral appearing to the right of each component part indicates the quantity of parts for each assembly unit.

PART NO.	DESCRIPTION	Q'TY	REMARKS
2F5–83310–60	FRONT FLASHER LIGHT ASSY	2	
115–83311–60	.BULB (6V–18W)	1	

4. Applicable colours of graphics are represented in the "REMARKS" as shown below.

PART NO.	DESCRIPTION	Q'TY	REMARKS
2N4–24110–00–X5	FUEL TANK COMP.	2	MXR
3J1–24240–10	.GRAPHIC, FUEL TANK	1	FOR MXR

5. Note that the illustrations for reference in finding parts numbers are not to be used for assembling. When assembling, please use the applicable service manual.

6. The asterisk (*) before a reference number indicates modified items after the first edition.

7. Applicable Serial No.

Frame Serial No.

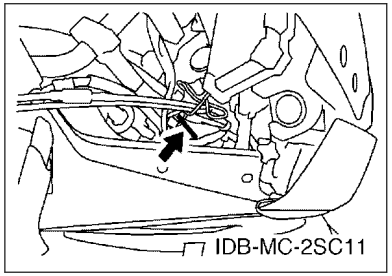

Engine Serial No.

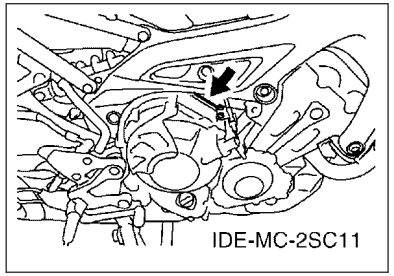

8. Applicable Colour Code (The (*) mark shows Model colour.)

Abbreviation	Colour Name	Colour Code
BNS4(*)	BLUISH GRAY SOLID 4	1511
DPBM15	DEEP PURPLISH BLUE METALLIC 15	1329
LLGS6	LIGHT LEAF GREEN SOLID 6	1510
MBL2	MAT BLACK 2	0582
MS1(*)	MAT SILVER 1	1160

9. Applicable Starting Serial No.

Frame Serial No.

Serial No.	Name Of Q'ty Column	Model Code

Engine Serial No.

Serial No.	Name Of Q'ty Column	Model Code

CONTENTS

ENGINE

CYLINDER HEAD....1
CRANKSHAFT & PISTON....3
VALVE....4
CAMSHAFT & CHAIN....6
WATER PUMP....7
RADIATOR & HOSE....9
OIL PUMP....11
OIL CLEANER....12
INTAKE....13
INTAKE 2....14
AIR INDUCTION SYSTEM....16
EXHAUST....17
CRANKCASE....18
CRANKCASE COVER 1....20
STARTER....22
CLUTCH....23
TRANSMISSION....25
SHIFT CAM & FORK....27
SHIFT SHAFT....28

CHASSIS

FRAME....29
FENDER....30
SIDE COVER....32
REAR ARM....34
REAR SUSPENSION....36
STEERING....37
FRONT FORK....38
FUEL TANK....40
SEAT....42
FRONT WHEEL....43
FRONT BRAKE CALIPER....44
REAR WHEEL....45
REAR BRAKE CALIPER....47
STEERING HANDLE & CABLE....48
FRONT MASTER CYLINDER....49
STAND & FOOTREST....50
REAR MASTER CYLINDER....53
GENERATOR....54
STARTING MOTOR....55
FLASHER LIGHT....56
METER....57
HEADLIGHT....58
TAILLIGHT....59
HANDLE SWITCH & LEVER....60
ELECTRICAL 1....61
ELECTRICAL 2....63

INDEX

NUMERICAL INDEX....64

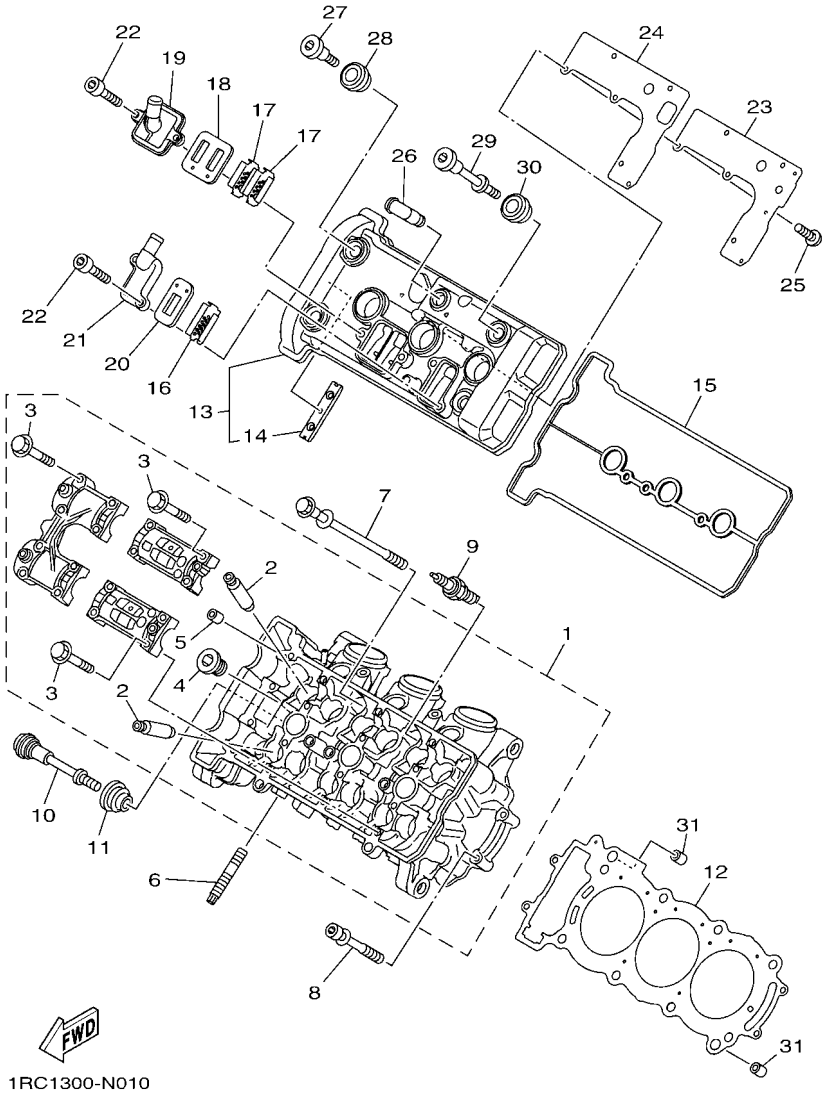

FIG. 1 CYLINDER HEAD

REF. NO.	PART NO.	DESCRIPTION	B892					REMARKS
1	B90–11101–09	CYLINDER HEAD ASSY	1					
2	2C0–11133–11	.GUIDE, VALVE 1	12					
3	90105–06027	.BOLT, FLANGE	16					
4	90340–18002	.PLUG, STRAIGHT SCREW	2					
5	91808–16023	.PIN, DOWEL	6					
6	90116–08087	BOLT, STUD	6					
7	90119–09015	BOLT, WITH WASHER	8					
8	90109–061F7	BOLT	4					
9	94701–00431	PLUG, SPARK (NGK R CPR9EA-9)	3					
10	90109–06293	BOLT	1					
11	5VY–1111G–00	RUBBER, MOUNT 1	1					
12	B90–11181–00	GASKET, CYLINDER HEAD 1	1					
13	1RC–11191–00	COVER, CYLINDER HEAD 1	1					
14	5BE–12241–00	.GUIDE, STOPPER 2	1					
15	1RC–11193–01	GASKET, HEAD COVER 1	1					
16	5JW–1482K–01	PLATE	1					
17	5VY–1482K–00	PLATE	2					
18	5SL–14890–00	REED VALVE ASSY	1					
19	5SL–14899–00	CAP, CASE	1					
20	5PS–14890–00	REED VALVE ASSY	1					
21	5JW–14889–00	CAP, CASE	1					
22	90110–06175	BOLT, HEXAGON SOCKET HEAD	4					
23	1RC–11165–00	PLATE, BREATHER	1					
24	1RC–11169–00	GASKET, BREATHER COVER	1					
25	90149–05037	SCREW	5					
26	4TR–11167–00	PIPE, BREATHER 2	1					
27	90109–066F0	BOLT	3					

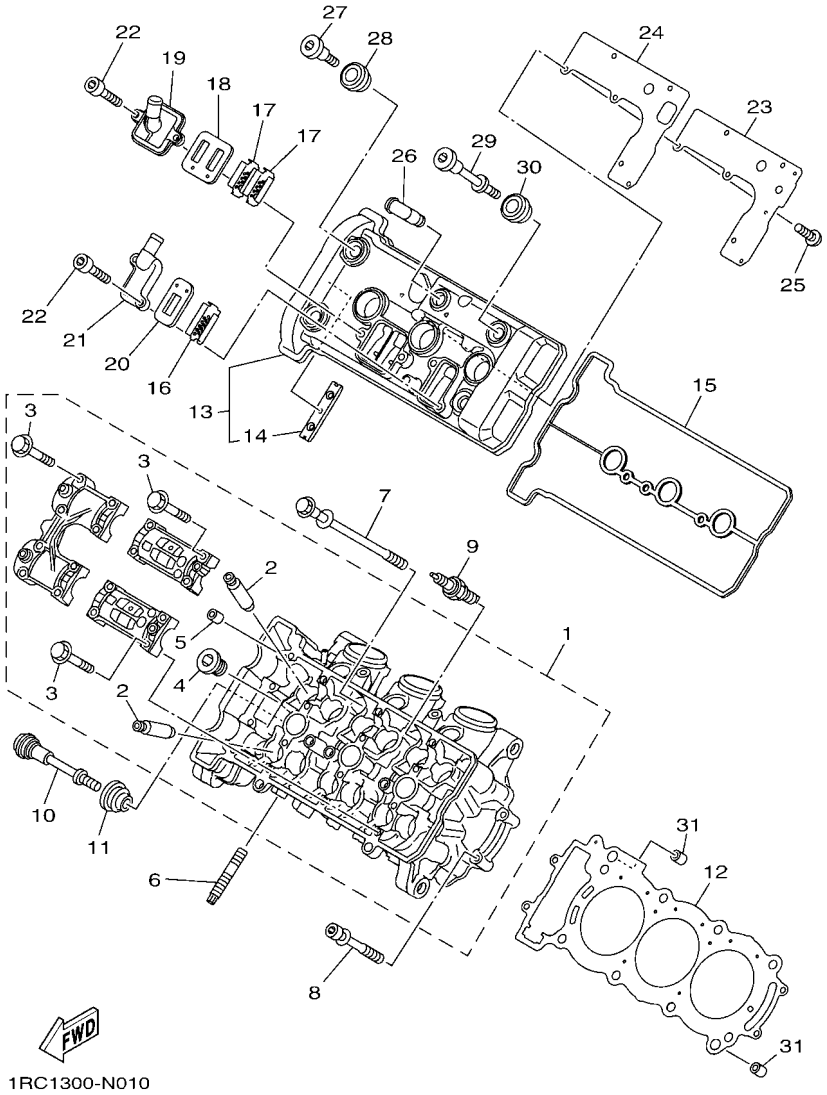

FIG. 1 CYLINDER HEAD

REF. NO.	PART NO.	DESCRIPTION	B892					REMARKS
28	5VY–1111G–00	RUBBER, MOUNT 1	3					
29	90109–06271	BOLT	1					
30	5VY–1111G–00	RUBBER, MOUNT 1	1					
31	99530–12016	PIN, DOWEL	2					

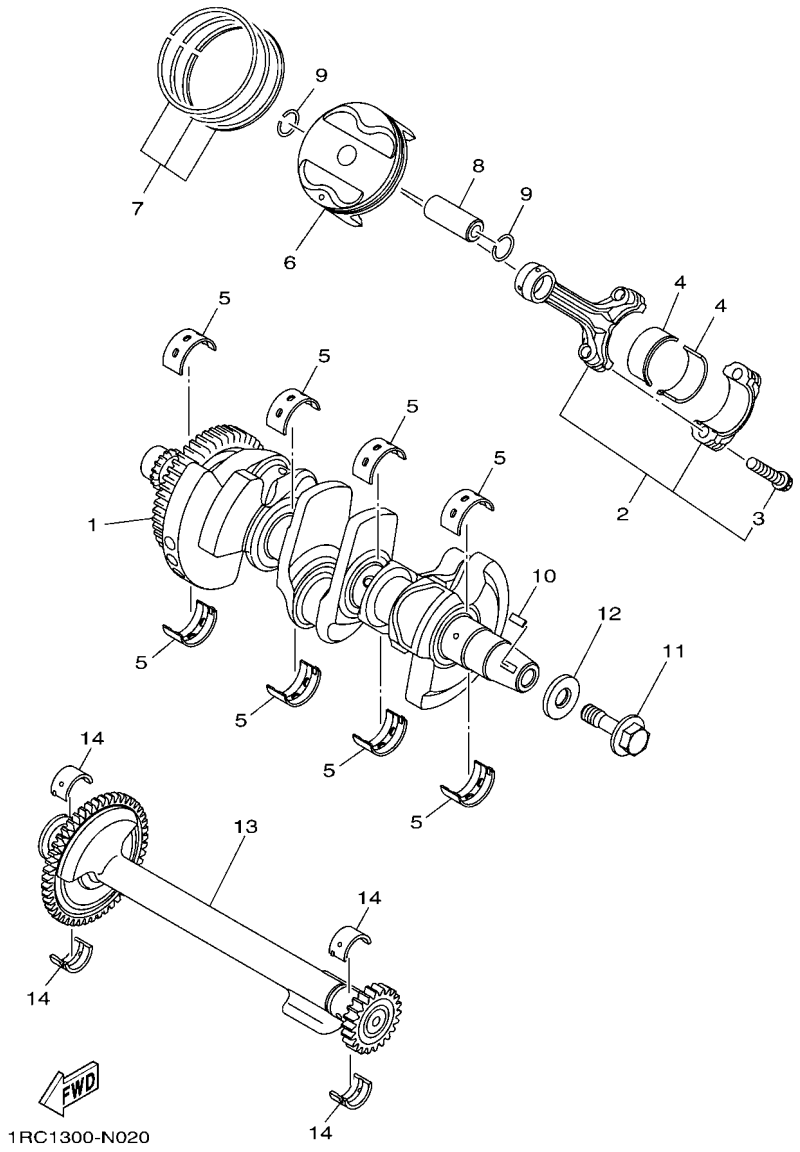

FIG. 2 CRANKSHAFT & PISTON

REF. NO.	PART NO.	DESCRIPTION	B892					REMARKS
1	1RC–11400–00	CRANKSHAFT ASSY	1					
2	1RC–11650–00	CONNECTING ROD ASSY	3					
3	1RC–11654–00	.BOLT, CONNECTING ROD	2					
4	1RC–11656–00	PLANE BEARING, CONNECTING ROD	6					UR BLUE
	1RC–11656–10	PLANE BEARING, CONNECTING ROD	6					UR BLACK
	1RC–11656–20	PLANE BEARING, CONNECTING ROD	6					UR BROWN
	1RC–11656–30	PLANE BEARING, CONNECTING ROD	6					UR GREEN
5	5VY–11416–A0	PLANE BEARING, CRANKSHAFT 1	8					UR WHITE
	5VY–11416–00	PLANE BEARING, CRANKSHAFT 1	8					UR BLUE
	5VY–11416–10	PLANE BEARING, CRANKSHAFT 1	8					UR BLACK
	5VY–11416–20	PLANE BEARING, CRANKSHAFT 1	8					UR BROWN
	5VY–11416–30	PLANE BEARING, CRANKSHAFT 1	8					UR GREEN
6	1RC–11631–00	PISTON (STD)	3					
7	1RC–11603–00	PISTON RING SET (STD)	3					
8	39P–11633–00	PIN, PISTON	3					
9	93450–18157	CIRCLIP	6					
10	90280–05029	KEY, WOODRUFF	1					
11	90105–126A8	BOLT, FLANGE	1					
12	90201–12008	WASHER, PLATE	1					
13	1RC–11500–00	BALANCER ASSY	1					
14	2S3–11413–00	METAL, BALANCE WEIGHT	4					UR BLUE
	2S3–11413–10	METAL, BALANCE WEIGHT	4					UR BLACK
	2S3–11413–20	METAL, BALANCE WEIGHT	4					UR BROWN
	2S3–11413–30	METAL, BALANCE WEIGHT	4					UR GREEN
	2S3–11413–40	METAL, BALANCE WEIGHT	4					UR YELLOW

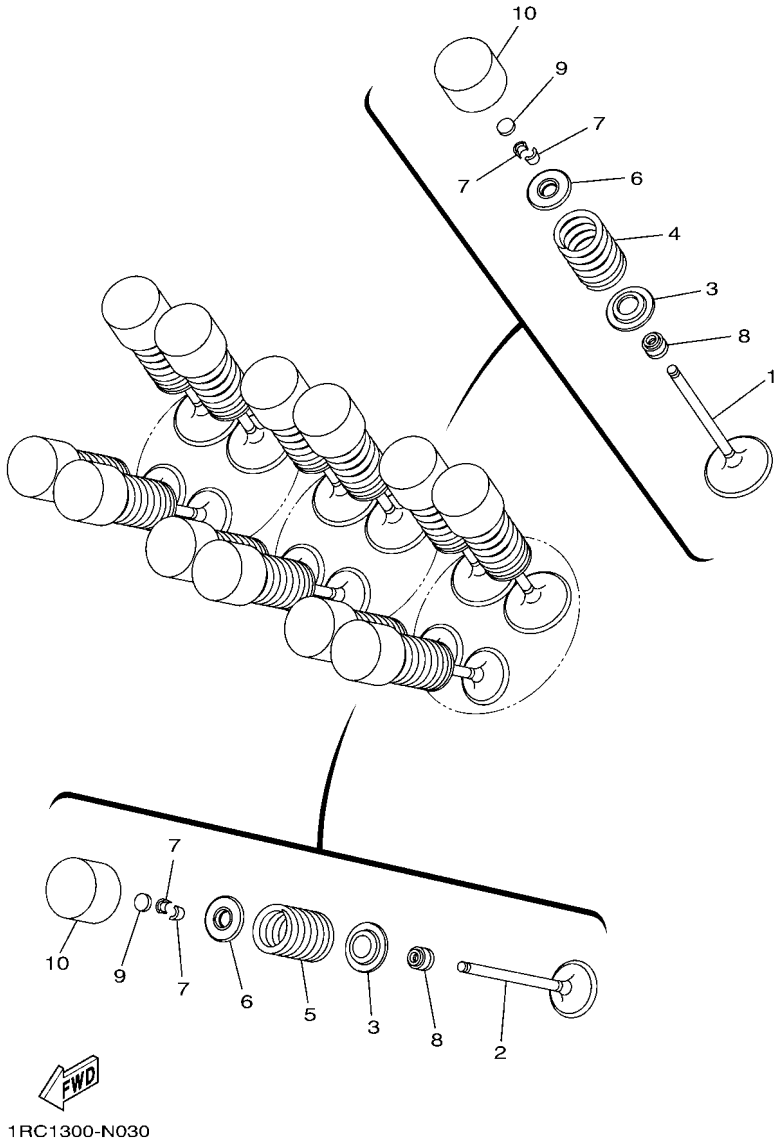

FIG. 3 VALVE

REF. NO.	PART NO.	DESCRIPTION	B892					REMARKS
1	1RC–12111–00	VALVE, INTAKE	6					
2	1RC–12121–00	VALVE, EXHAUST	6					
3	1RC–12116–00	SEAT, VALVE SPRING	12					
4	1RC–12113–00	SPRING, VALVE INNER	6					
5	1RC–12114–00	SPRING, VALVE OUTER	6					
6	3D7–12117–00	RETAINER, VALVE SPRING	12					
7	1WG–12118–00	LOCK, VALVE SPRING RETAINER	24					
8	4TE–12119–00	SEAL, VALVE STEM	12					
9	1HX–12168–F0	PAD, ADJUSTING 2 (1.50)	12					UR
	1HX–12168–H1	PAD, ADJUSTING 2 (1.55)	12					UR
	1HX–12168–K1	PAD, ADJUSTING 2 (1.60)	12					UR
	1HX–12168–M1	PAD, ADJUSTING 2 (1.65)	12					UR
	1HX–12168–R1	PAD, ADJUSTING 2 (1.70)	12					UR
	1HX–12168–U1	PAD, ADJUSTING 2 (1.75)	12					UR
	1HX–12168–W1	PAD, ADJUSTING 2 (1.80)	12					UR
	1HX–12168–Y1	PAD, ADJUSTING 2 (1.85)	12					UR
	1HX–12169–11	PAD, ADJUSTING 2 (1.90)	12					UR
	1HX–12169–31	PAD, ADJUSTING 2 (1.95)	12					UR
	1HX–12169–50	PAD, ADJUSTING 2 (2.00)	12					UR
	1HX–12169–70	PAD, ADJUSTING 2 (2.05)	12					UR
	1HX–12169–90	PAD, ADJUSTING 2 (2.10)	12					UR
	1HX–12169–E0	PAD, ADJUSTING 2 (2.15)	12					UR
	1HX–12169–G0	PAD, ADJUSTING 2 (2.20)	12					UR
	1HX–12169–J0	PAD, ADJUSTING 2 (2.25)	12					UR
	1HX–12169–L0	PAD, ADJUSTING 2 (2.30)	12					UR
	1HX–12169–N0	PAD, ADJUSTING 2 (2.35)	12					UR
	1HX–12169–T0	PAD, ADJUSTING 2 (2.40)	12					UR

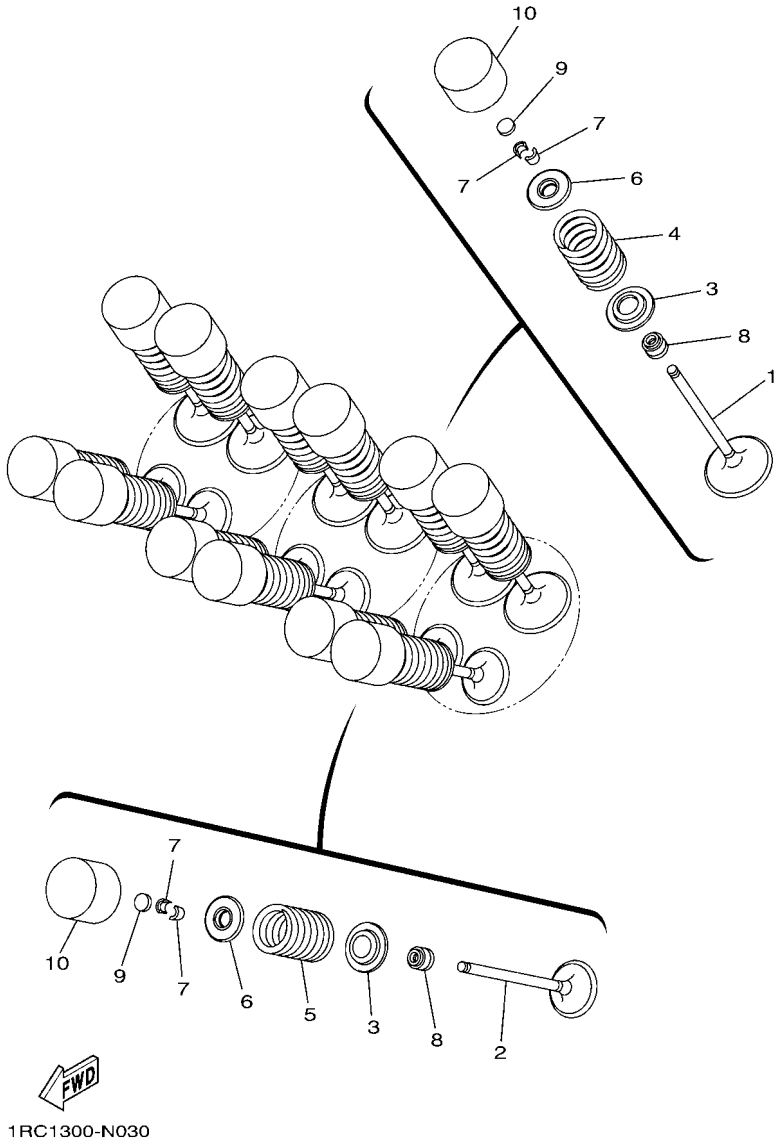

FIG. 3 VALVE

REF. NO.	PART NO.	DESCRIPTION	B892					REMARKS
10	4C8–12153–10	LIFTER, VALVE	12					UR YELLOW
	4C8–12153–09	LIFTER, VALVE (O/S)	12					AP GREEN

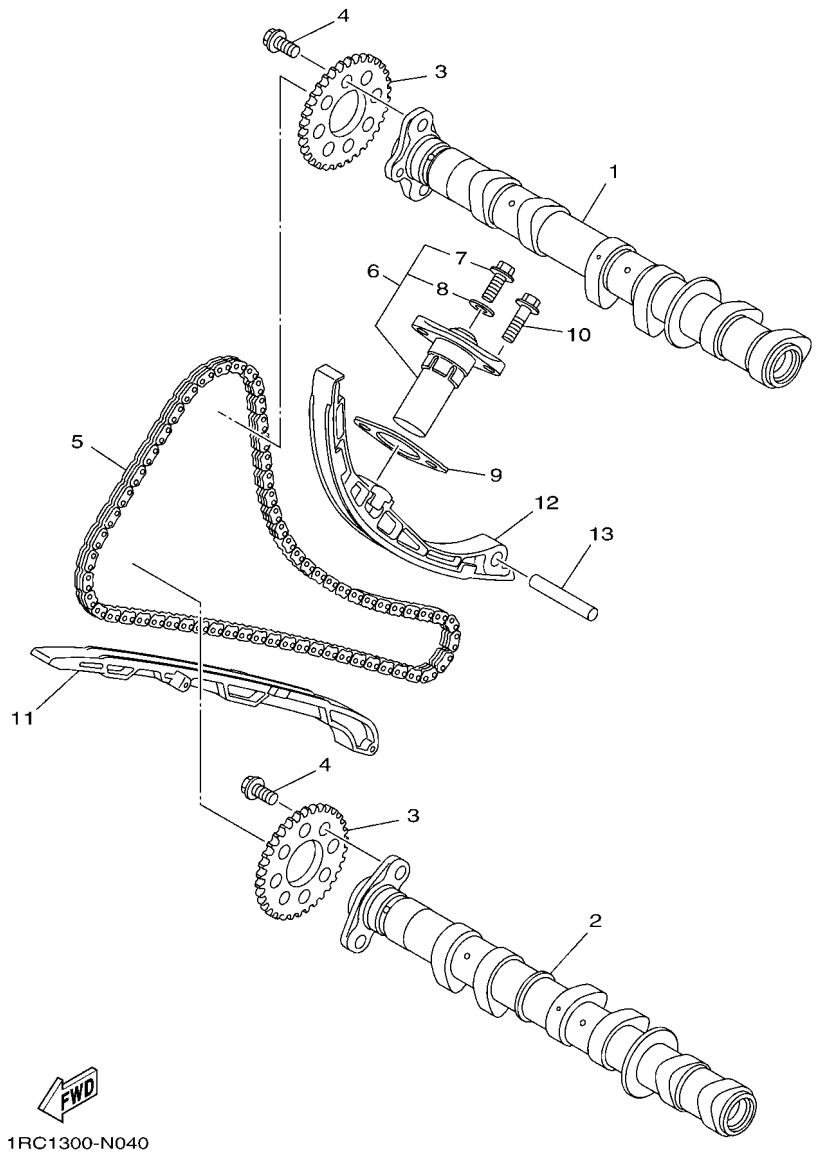

FIG. 4 CAMSHAFT & CHAIN

REF. NO.	PART NO.	DESCRIPTION	B892					REMARKS
1	1RC–12170–00	CAMSHAFT ASSY 1	1					
2	1RC–12180–00	CAMSHAFT ASSY 2	1					
3	20S–12176–00	SPROCKET, CAM CHAIN	2					
4	90105–07006	BOLT, FLANGE	4					
5	94591–57128	CHAIN (98XRH2010-128M)	1					
6	B90–12210–00	TENSIONER ASSY, CAM CHAIN	1					
7	5EL–12228–00	.BOLT	1					
8	5SL–12214–00	.GASKET	1					
9	1WS–12213–00	GASKET, TENSIONER CASE	1					
10	90110–06395	BOLT, HEXAGON SOCKET HEAD	2					
11	1RC–12251–00	DAMPER, CHAIN 1	1					
12	1RC–12250–01	CHAIN DAMPER ASSY	1					
13	93607–44002	PIN, DOWEL	1					

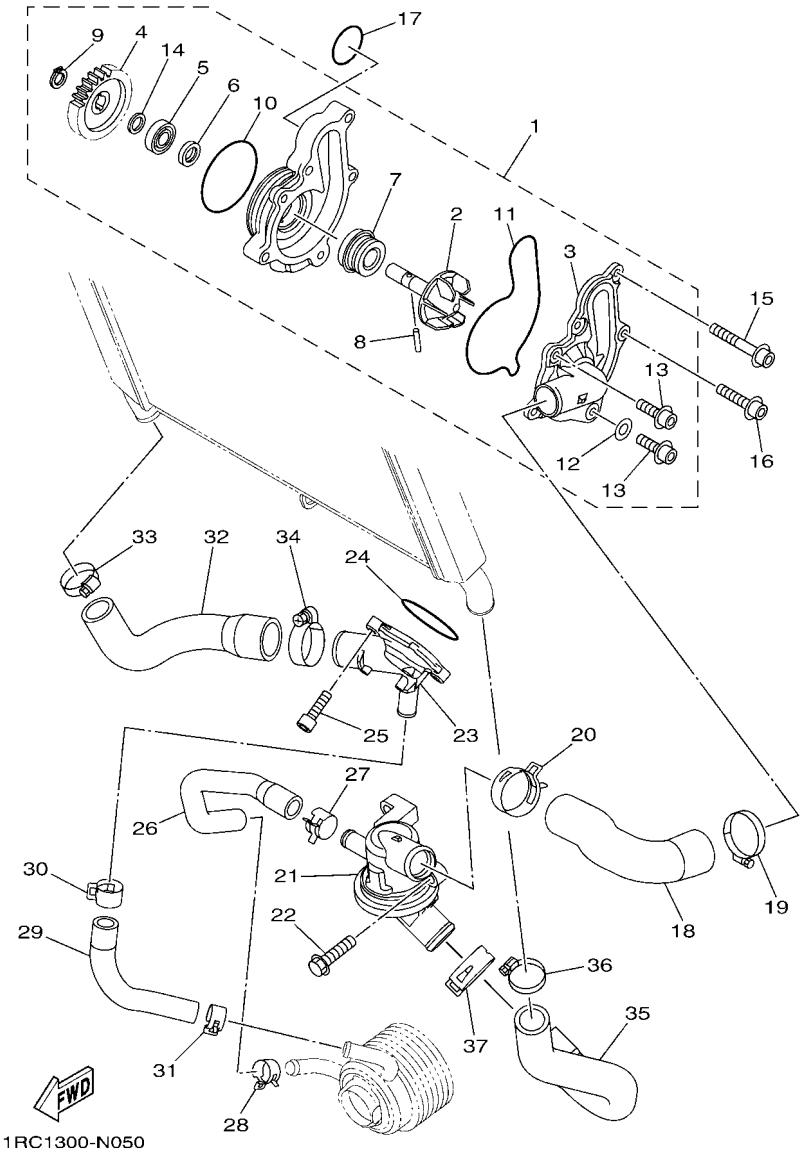

FIG. 5 WATER PUMP

REF. NO.	PART NO.	DESCRIPTION	B892					REMARKS
1	1RC–12420–00	WATER PUMP ASSY	1					
2	1RC–12450–00	.IMPELLER SHAFT ASSY	1					
3	1RC–12422–00	.COVER, HOUSING	1					
4	1RC–12459–00	.GEAR, IMPELLER SHAFT	1					
5	93306–00106	.BEARING	1					
6	93101–12173	.OIL SEAL	1					
7	5VK–12438–00	.SEAL, MECHANICAL	1					
8	93603–16219	.PIN, DOWEL	1					
9	99009–12400	.CIRCLIP	1					
10	93210–61750	.O-RING	1					
11	1RC–12439–00	.O-RING	1					
12	90430–06014	.GASKET	1					
13	90110–06396	.BOLT, HEXAGON SOCKET HEAD	2					
14	90201–12541	.WASHER, PLATE	1					
15	90110–06394	BOLT, HEXAGON SOCKET HEAD	2					
16	90110–06388	BOLT, HEXAGON SOCKET HEAD	1					
17	93210–30694	O-RING	1					
18	1RC–12577–00	HOSE 2	1					
19	90450–38040	HOSE CLAMP ASSY	1					
20	90467–310A0	CLIP	1					
21	1RC–12410–00	THERMOSTAT ASSY	1					
22	95822–06025	BOLT, FLANGE	2					
23	1RC–12469–00	JOINT 1	1					
24	93210–46044	O-RING	1					
25	90110–06274	BOLT, HEXAGON SOCKET HEAD	2					
26	1RC–12578–00	HOSE 3	1					
27	90467–200A0	CLIP	1					

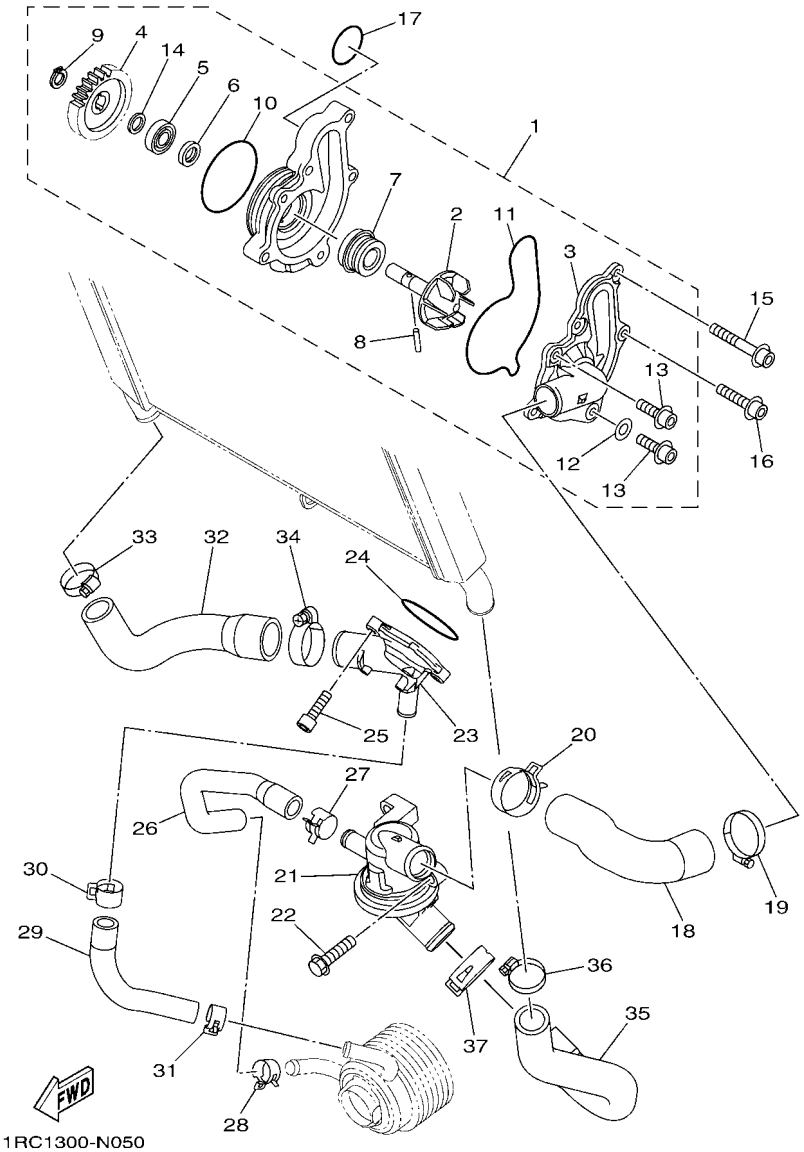

FIG. 5 WATER PUMP

REF. NO.	PART NO.	DESCRIPTION	B892					REMARKS
28	90467–17128	CLIP	1					
29	1RC–12579–00	HOSE 4	1					
30	90467–200A0	CLIP	1					
31	90467–17128	CLIP	1					
32	1RC–12588–00	HOSE 5	1					
33	90450–32003	HOSE CLAMP ASSY	1					
34	90450–38040	HOSE CLAMP ASSY	1					
35	1RC–12576–00	HOSE 1	1					
36	90450–32003	HOSE CLAMP ASSY	1					
37	90467–310A0	CLIP	1					

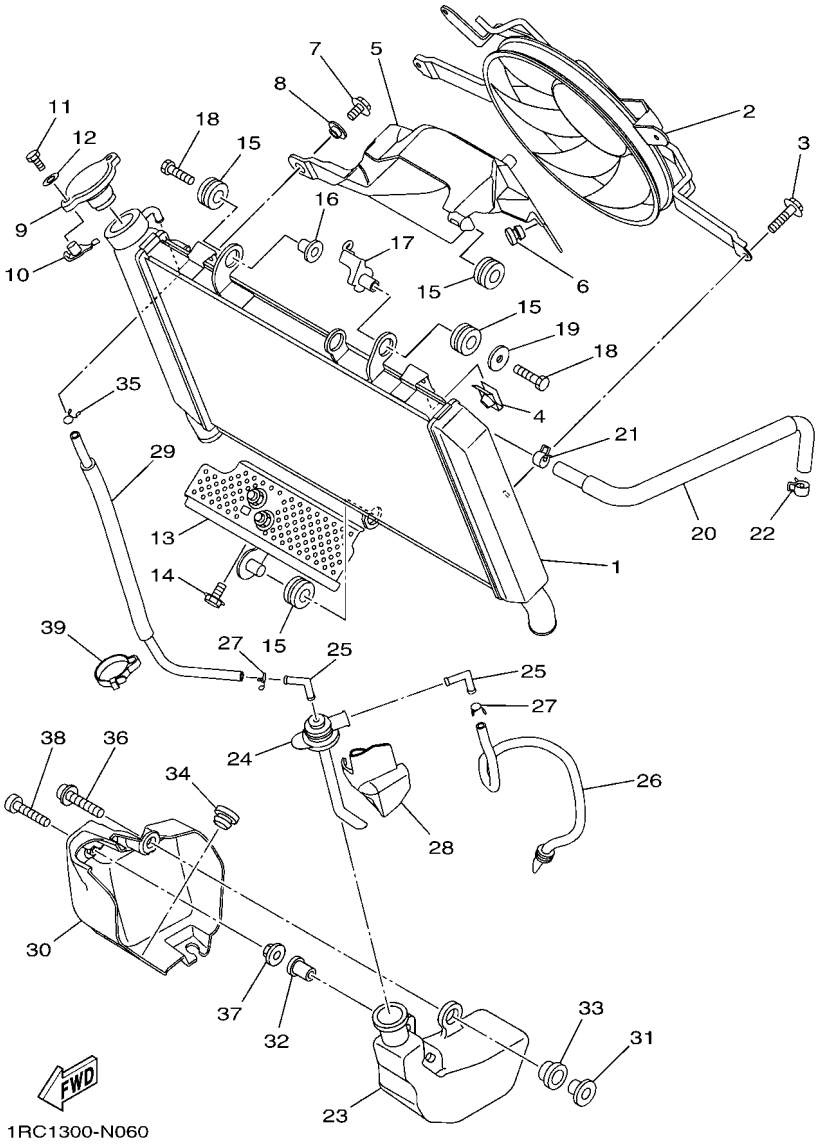

FIG. 6 RADIATOR & HOSE

REF. NO.	PART NO.	DESCRIPTION	B892					REMARKS
1	1RC–12461–00	RADIATOR COMP	1					
2	1RC–12405–00	BLOWER ASSY	1					
3	3D8–12675–00	BOLT, BLOWER HOLDING	4					
4	1AA–12535–00	PLATE	2					
5	1RC–12467–00	COVER, RADIATOR	1					
6	90338–07157	PLUG	1					
7	90105–06080	BOLT, FLANGE	1					
8	90387–07717	COLLAR	1					
9	4FL–12462–00	CAP, RADIATOR	1					
10	5FC–12437–00	STOPPER	1					
11	97007–05012	BOLT	1					
12	92907–05600	WASHER, PLATE	1					
13	1RC–12637–00	STAY 1	1					
14	95822–06012	BOLT, FLANGE	1					
15	90480–15363	GROMMET	4					
16	90387–06158	COLLAR	1					
17	1RC–26132–00	GUIDE, CABLE 2	1					
18	91312–06030	BOLT	2					
19	90201–06033	WASHER, PLATE	1					
20	1RC–1243A–00	HOSE 1	1					
21	90467–10039	CLIP	1					
22	90467–10039	CLIP	1					
23	1RC–21871–00	TANK, RECOVERY	1					
24	1RC–21875–00	CAP	1					
25	1RC–21828–00	ELBOW	2					
26	1RC–21826–00	PIPE, BREATHER	1					
27	90467–08075	CLIP	2					

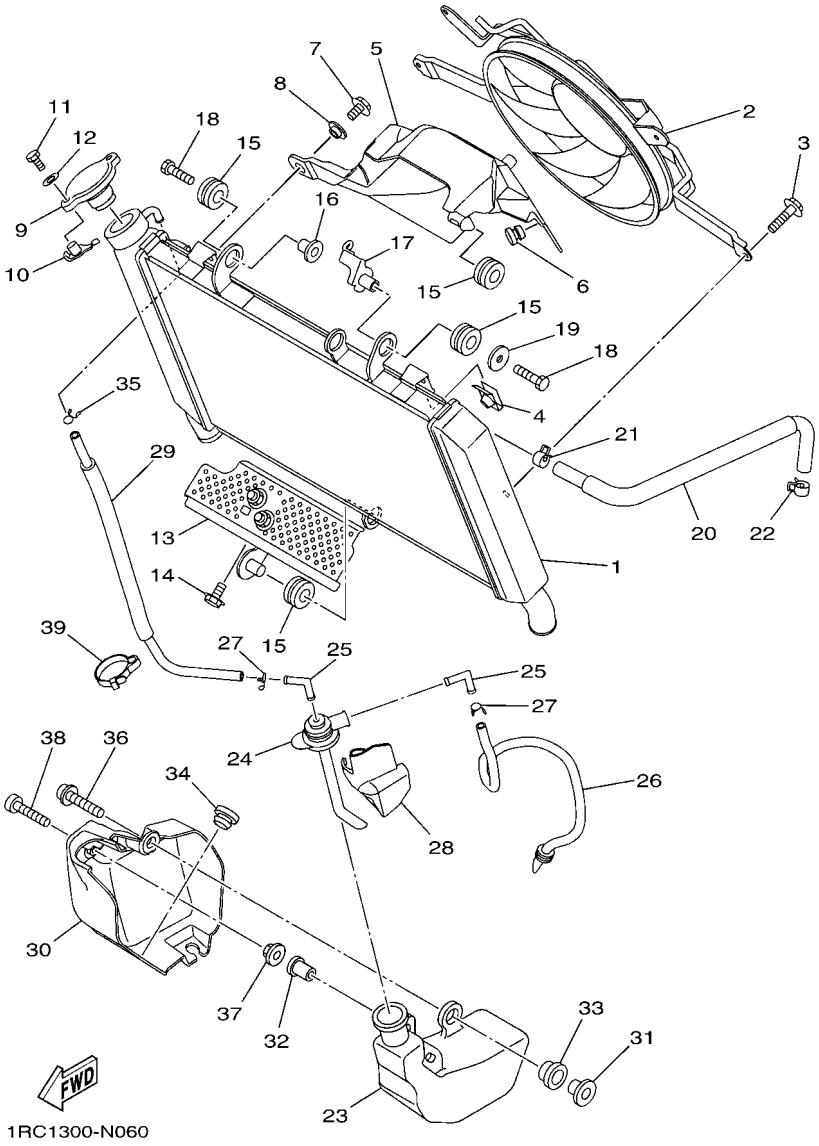

FIG. 6 RADIATOR & HOSE

REF. NO.	PART NO.	DESCRIPTION	B892					REMARKS
28	1RC–22825–00	PROTECTOR 1	1					
29	1RC–21816–00	PIPE 1	1					
30	1RC–2172W–00	COVER	1					
31	90387–06285	COLLAR	1					
32	90179–05523	NUT	1					
33	1RC–21749–00	COLLAR	1					
34	90480–13203	GROMMET	1					
35	90467–08075	CLIP	1					
36	90110–06233	BOLT, HEXAGON SOCKET HEAD	1					
37	1RC–21748–00	COLLAR	1					
38	92012–05030	BOLT, BUTTON HEAD	1					
39	90464–07M40	CLAMP	1					

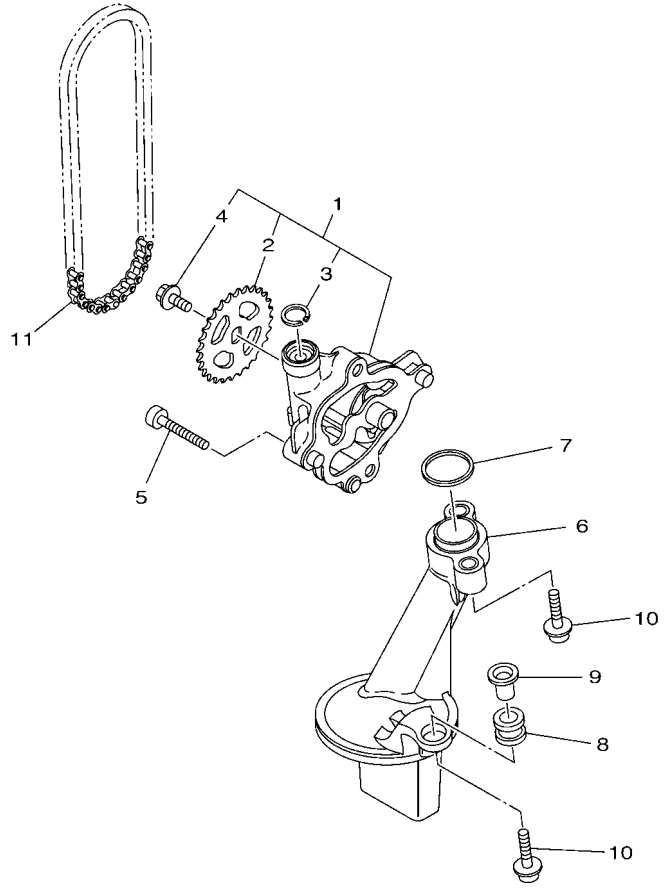

1RC1300-N070

FIG. 7 OIL PUMP

REF. NO.	PART NO.	DESCRIPTION	B892					REMARKS
1	1RC–13300–00	OIL PUMP ASSY	1					
2	1RC–13355–00	.SPROCKET, DRIVEN	1					
3	99009–15500	.CIRCLIP	1					
4	90105–06066	.BOLT, FLANGE	1					
5	91312–06035	BOLT	4					
6	1RC–13410–00	STRAINER HOUSING ASSY	1					
7	93210–22001	O-RING	1					
8	90480–13010	GROMMET	1					
9	5VY–13117–10	COLLAR, DISTANCE	1					
10	90110–06173	BOLT, HEXAGON SOCKET HEAD	3					
11	94581–79066	CHAIN (DID 25H)	1					

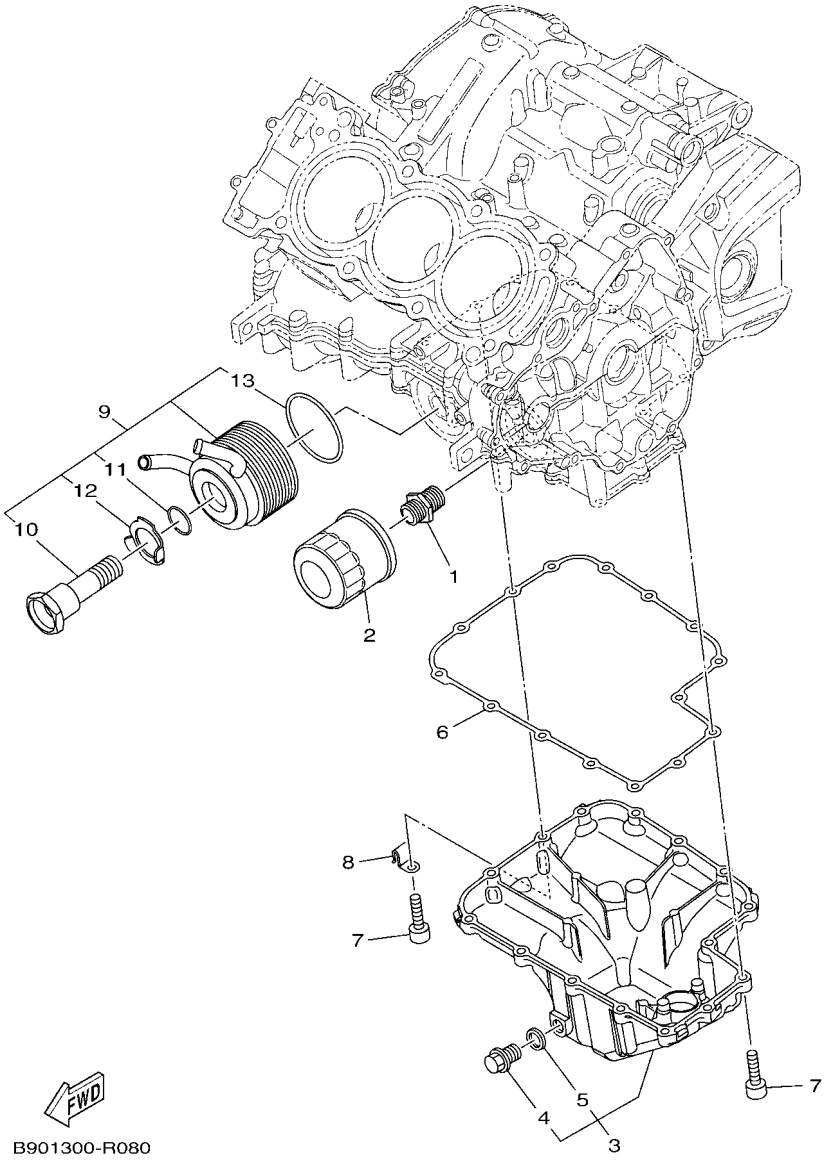

FIG. 8 OIL CLEANER

REF. NO.	PART NO.	DESCRIPTION	B892					REMARKS
1	90401–20008	BOLT, UNION	1					
2	5GH–13440–50	ELEMENT ASSY, OIL CLEANER	1					
3	B56–13400–00	STRAINER COVER ASSY	1					
4	90340–14132	.PLUG, STRAIGHT SCREW	1					
5	214–11198–01	.GASKET	1					
6	1RC–13414–00	GASKET, STRAINER COVER	1					
7	91312–06025	BOLT, HEXAGON SOCKET HEAD	15					
8	90465–06025	CLAMP	1					
9	1RC–13470–00	OIL COOLER ASSY	1					
10	5PW–12822–00	.BOLT, UNION	1					
11	5PW–13473–00	.O-RING	1					
12	5PW–13318–00	.WASHER	1					
13	5PW–13475–00	.GASKET	1					

FIG. 9 INTAKE

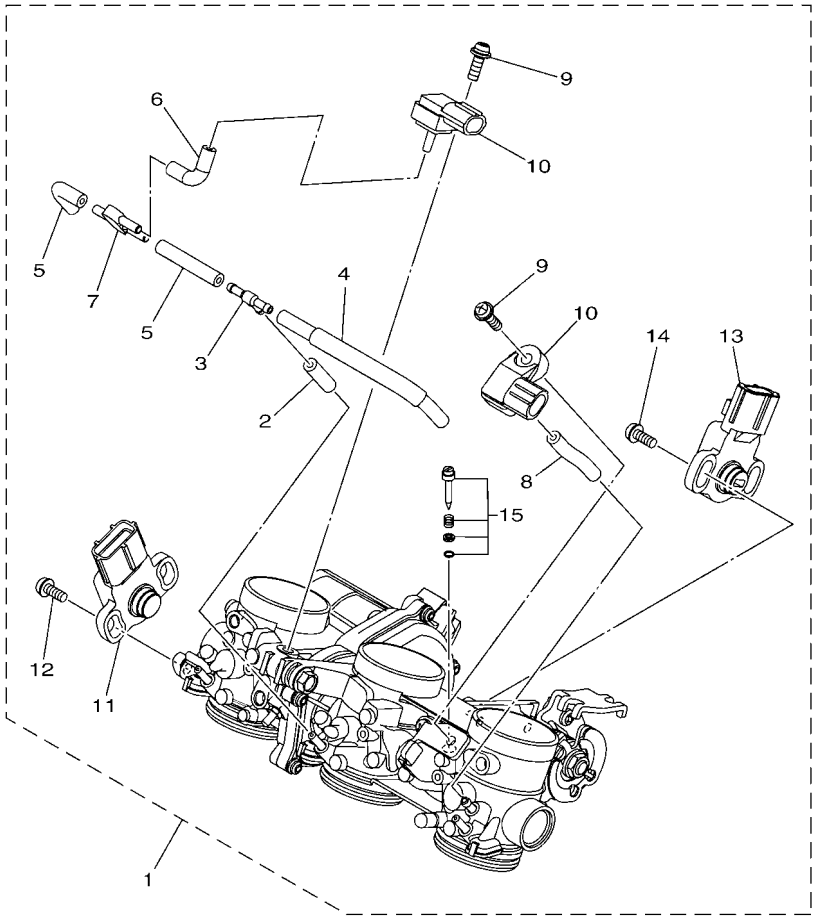

1RC1300-N090

REF. NO.	PART NO.	DESCRIPTION	B892					REMARKS
1	1RC–13750–00	THROTTLE BODY ASSY	1					
2	1RC–13544–00	.HOSE, VACUUM SENSING 2	1					
3	68V–24376–00	.PIPE, JOINT 1	1					
4	1RC–13542–00	.HOSE, VACUUM SENSING 1	1					
5	8FP–14349–20	.PIPE	2					
6	8FP–14349–00	.PIPE	1					
7	3XV–14251–00	.NIPPLE	1					
8	8FP–14349–30	.PIPE	1					
9	2C0–14216–00	.SCREW	2					
10	2C0–82380–00	.SENSOR, PRESSURE	2					
11	13S–85885–00	.THROTTLE SENSOR ASSY	1					
12	8CC–14216–10	.SCREW	2					
13	1MC–85884–00	.ACCELERATOR SENSOR ASSY	1					
14	5FL–14216–00	.SCREW	2					
15	2C0–14105–00	.PILOT SCREW SET	3					

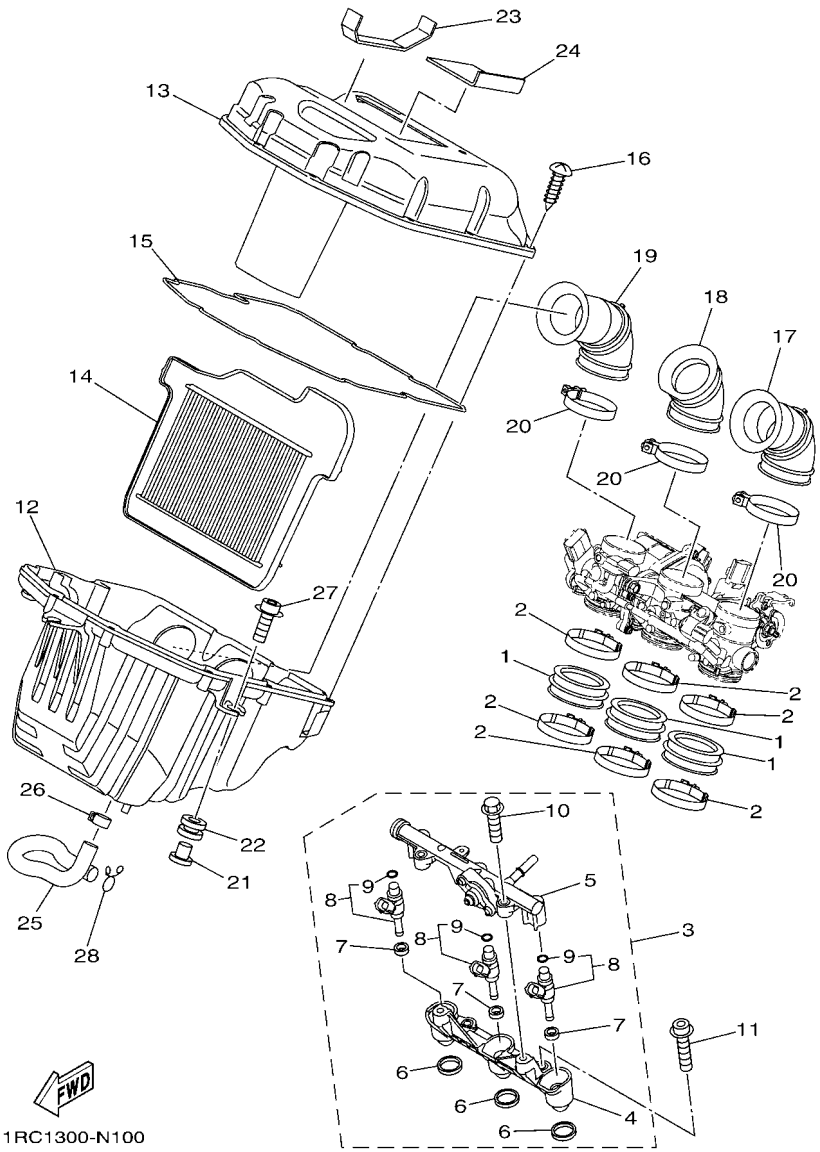

FIG. 10 INTAKE 2

REF. NO.	PART NO.	DESCRIPTION	B892					REMARKS
1	1RC–13635–00	JOINT, INTAKE 1	3					
2	90450–56009	HOSE CLAMP ASSY	6					
3	1RC–13930–00	PIPE INLET ASSEMBLY	1					
4	1RC–12572–00	.ADAPTER	1					
5	1RC–13938–00	.PIPE	1					
6	1RC–13556–00	.GASKET, MANIFOLD	3					
7	8FP–13556–00	.RUBBER, INJECTOR	3					
8	4C8–13761–00	.INJECTOR	3					
9	5PS–14147–00	..O-RING	1					
10	1RC–13573–00	.BOLT 1	2					
11	90110–06388	BOLT, HEXAGON SOCKET HEAD	2					
12	1RC–14411–00	CASE, AIR CLEANER 1	1					
13	1RC–14402–00	CAP ASSY, AIR CLEANER	1					
14	1RC–14451–00	ELEMENT, AIR CLEANER	1					
15	1RC–14452–00	SEAL	1					
16	90160–05013	SCREW, ROUND TAPPING	10					
17	1RC–14453–00	JOINT, AIR CLEANER 1	1					
18	1RC–14463–00	JOINT, AIR CLEANER 2	1					
19	1RC–14454–00	JOINT	1					
20	90450–53007	HOSE CLAMP ASSY	3					
21	90387–06205	COLLAR	3					
22	90480–12314	GROMMET	3					
23	1RC–14425–00	DAMPER 1	1					
24	1RC–14426–00	DAMPER 2	1					
25	1RC–15393–00	PIPE, BREATHER 2	1					
26	90467–15001	CLIP	1					
27	90110–06233	BOLT, HEXAGON SOCKET HEAD	3					

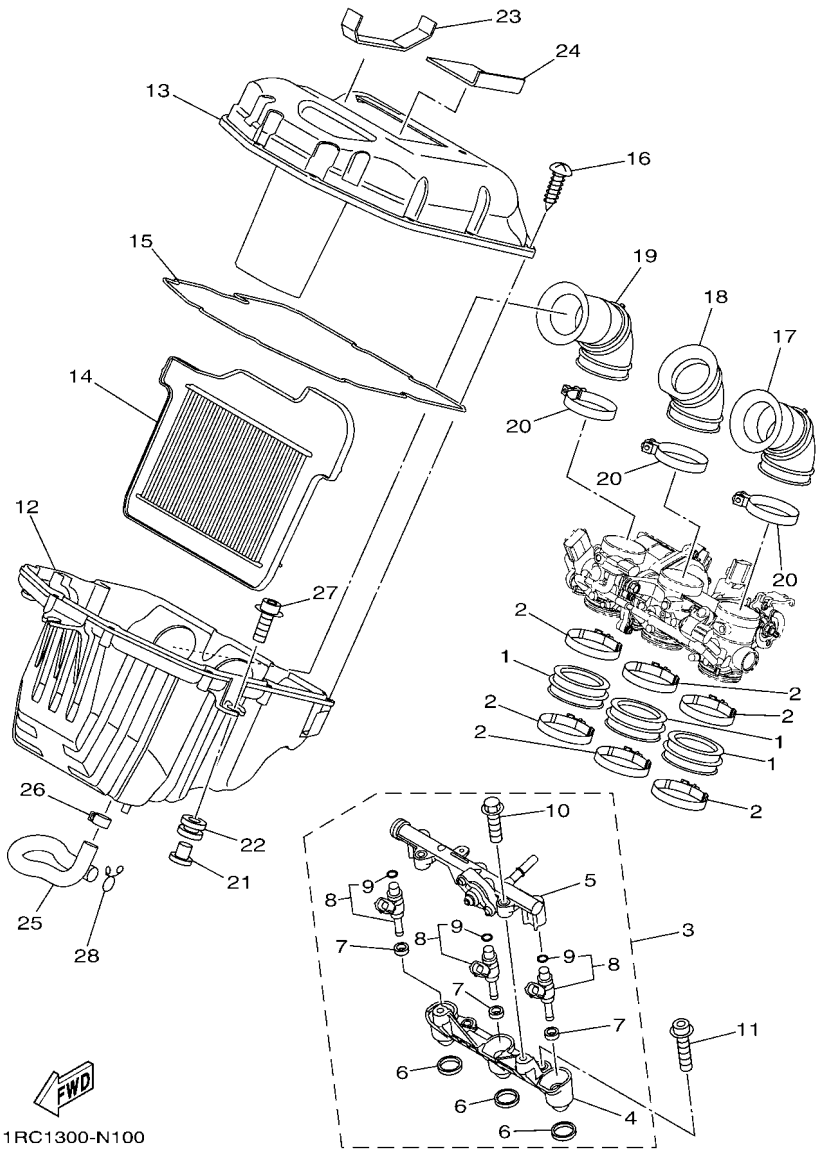

FIG. 10 INTAKE 2

REF. NO.	PART NO.	DESCRIPTION	B892					REMARKS
28	90467–14015	CLIP	1					

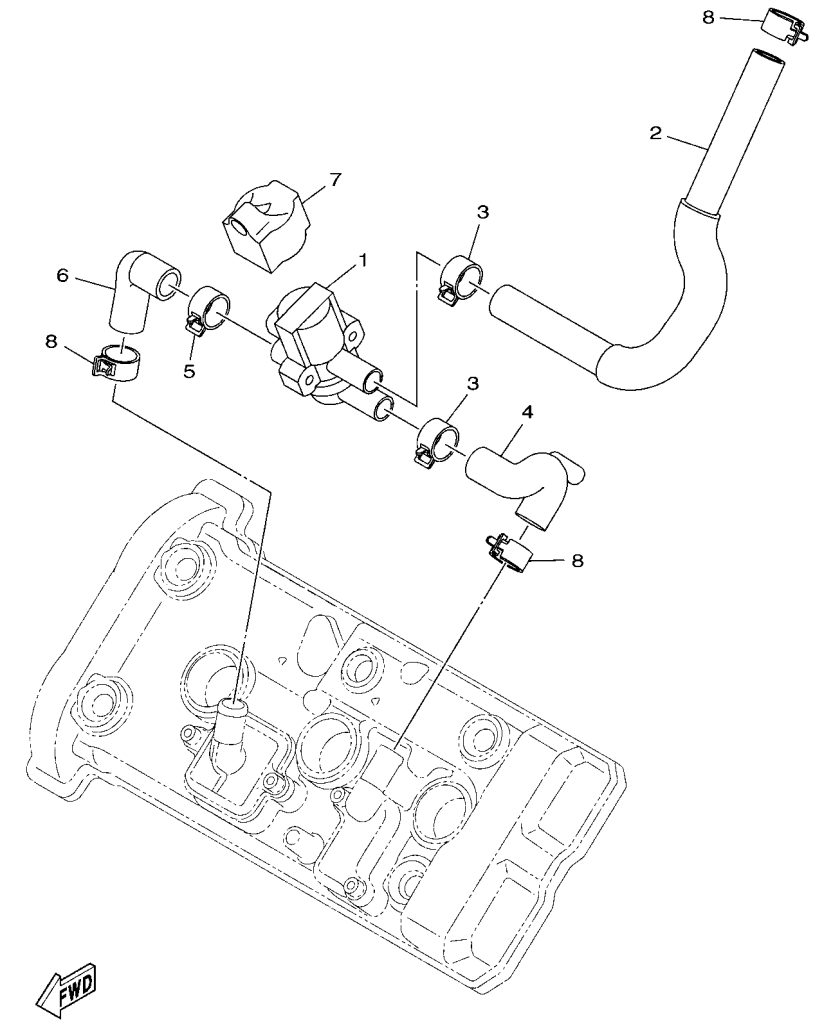

1RC1300-N110

FIG. 11 AIR INDUCTION SYSTEM

REF. NO.	PART NO.	DESCRIPTION	B892					REMARKS
1	2S3–14840–00	AIR CUT VALVE ASSY	1					
2	1RC–14881–00	HOSE, BEND 1	1					
3	90467–17089	CLIP	2					
4	1RC–14882–00	HOSE, BEND 2	1					
5	90467–17089	CLIP	1					
6	1RC–14883–00	HOSE, BEND 3	1					
7	1RC–1445C–00	HOLDER	1					
8	90467–17003	CLIP	3					

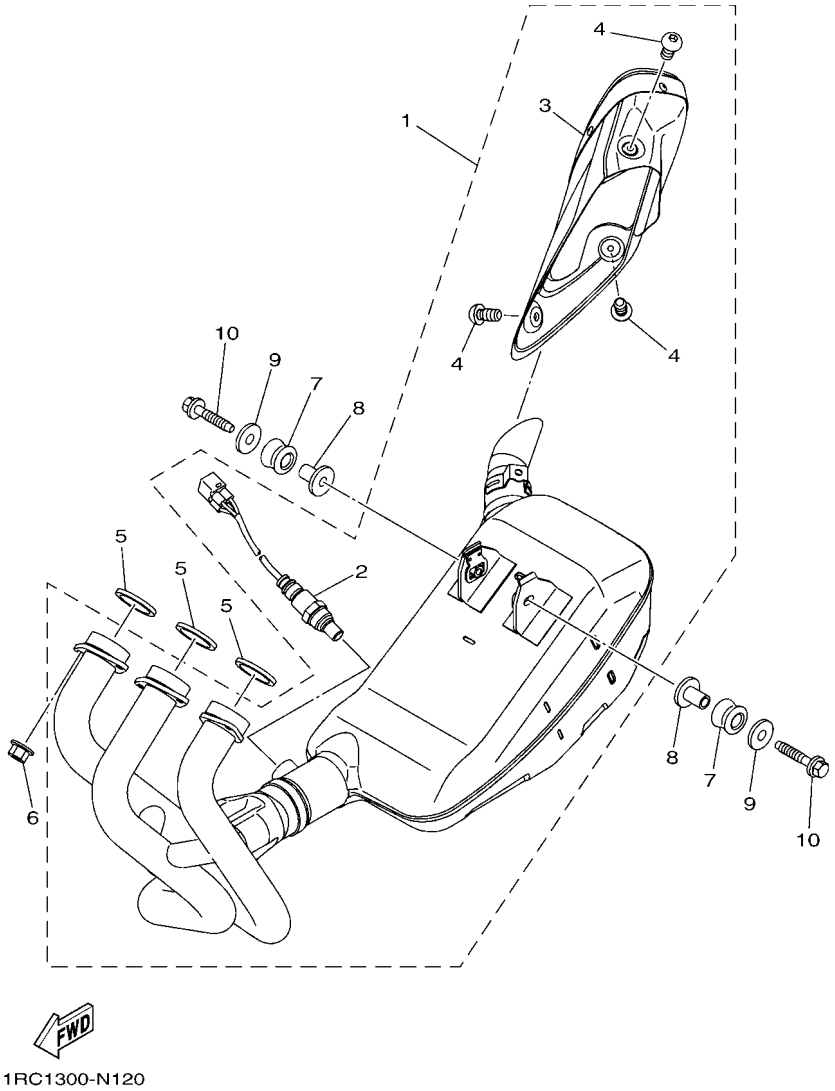

FIG. 12 EXHAUST

REF. NO.	PART NO.	DESCRIPTION	B892					REMARKS
1	1RC–14710–00	MUFFLER ASSY 1	1					
2	59C–8592A–00	.SENSOR, OXYGEN	1					
3	1RC–14708–00	.PROTECTOR ASSY	1					
4	90111–06060	.BOLT HEX. SOCKET BUTTON	3					
5	4FM–14613–00	GASKET, EXHAUST PIPE	3					
6	90179–08410	NUT	6					
7	5VY–14747–00	DAMPER, MUFFLER	2					
8	90387–08021	COLLAR	2					
9	90201–087G2	WASHER, PLATE	2					
10	90109–08170	BOLT	2					

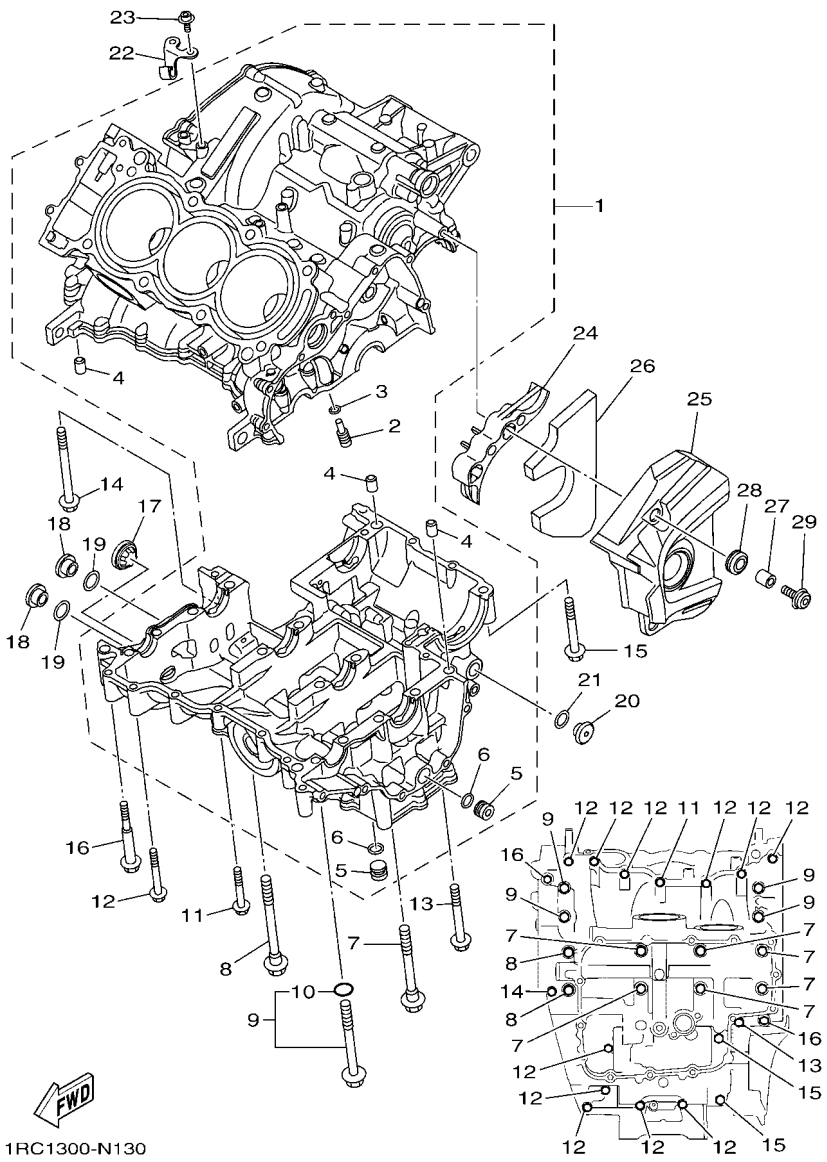

FIG. 13 CRANKCASE

REF. NO.	PART NO.	DESCRIPTION	B892					REMARKS
1	1RC–15100–08	CRANKCASE ASSY	1					
2	5EB–15155–00	.NOZZLE 3	3					
3	93210–04092	.O-RING	3					
4	99530–10014	.PIN, DOWEL	3					
5	90338–16262	.PLUG	2					
6	93210–12790	.O-RING	2					
7	90119–09013	BOLT, WITH WASHER	6					
8	90119–09010	BOLT, WITH WASHER	2					
9	23P–15156–00	BOLT, CRANKCASE JOURNAL	4					
10	93210–07540	.O-RING	1					
11	95812–06040	BOLT, FLANGE	1					
12	95812–06050	BOLT, FLANGE	11					
13	95812–06065	BOLT, FLANGE	1					
14	90105–06202	BOLT, FLANGE	1					
15	95812–08060	BOLT, FLANGE	2					
16	90109–06100	BOLT	2					
17	2H7–15361–00	GAUGE, LEVEL	1					
18	36Y–15189–00	PLUG	2					
19	93210–16325	O-RING	2					
20	90340–14011	PLUG, STRAIGHT SCREW	1					
21	93210–14369	O-RING	1					
22	1RC–15441–00	HOLDER, CLUTCH CABLE	1					
23	90110–06108	BOLT, HEXAGON SOCKET HEAD	2					
24	1RC–15377–00	GUIDE, INLET	1					
25	1RC–15418–00	COVER, CHAIN CASE	1					
26	1RC–15338–00	DAMPER 5	1					
27	90387–06286	COLLAR	3					

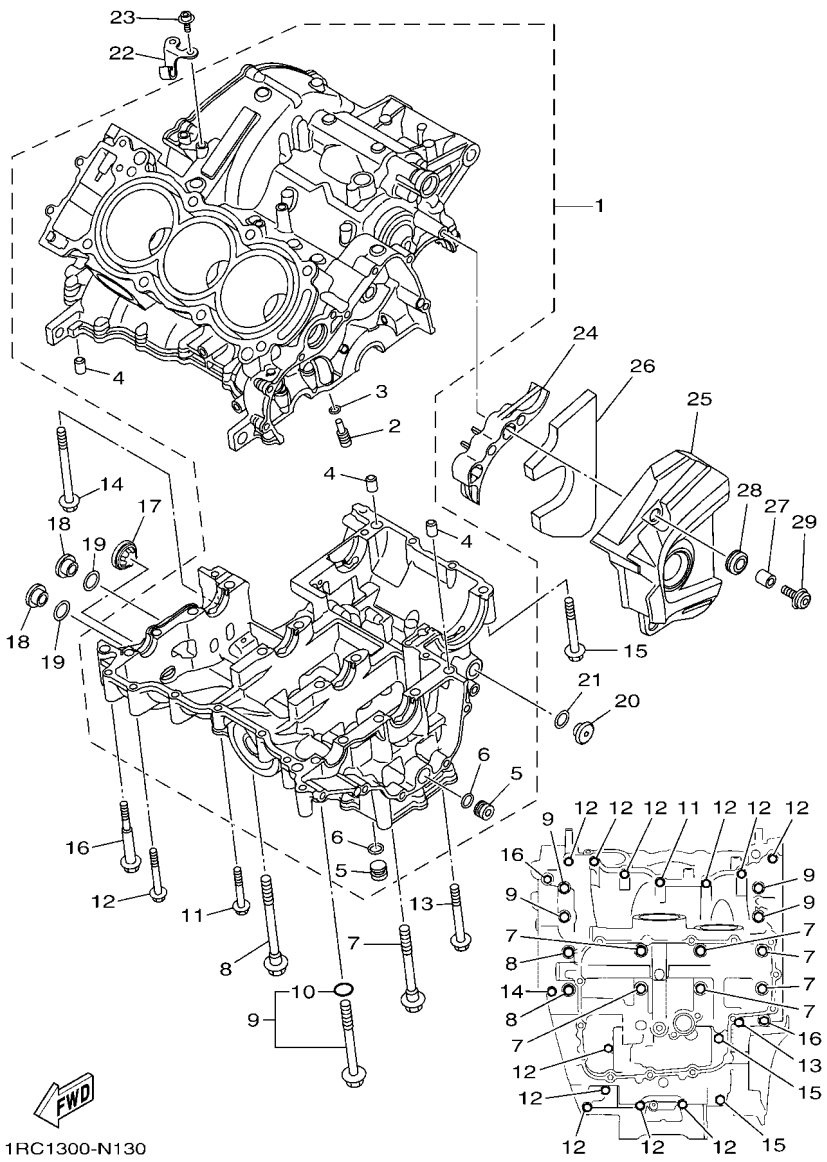

FIG. 13 CRANKCASE

REF. NO.	PART NO.	DESCRIPTION	B892					REMARKS
28	90480–13018	GROMMET	3					
29	90111–06130	BOLT, HEX.SOCKET BUTTON	3					

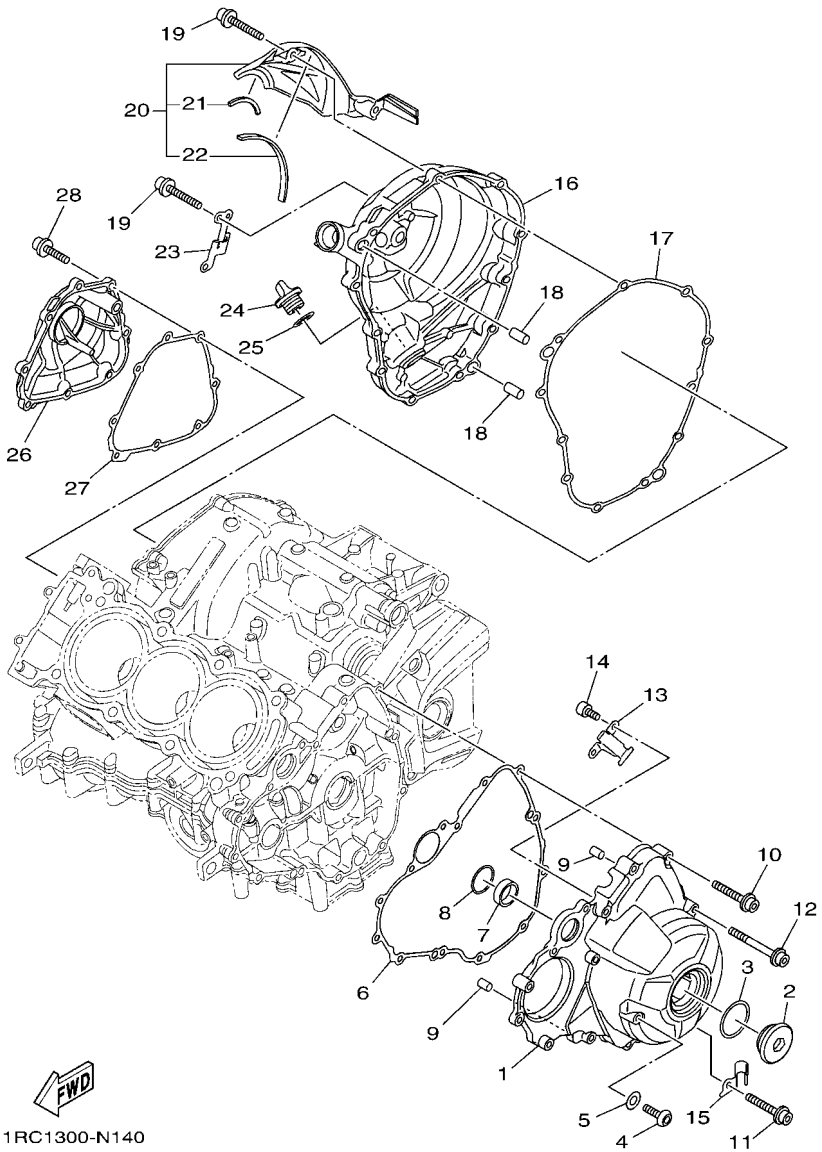

FIG. 14 CRANKCASE COVER 1

REF. NO.	PART NO.	DESCRIPTION	B892					REMARKS
1	1RC–15411–00	COVER, CRANKCASE 1	1					
2	90340–36005	PLUG, STRAIGHT SCREW	1					
3	93210–357A3	O-RING	1					
4	92017–08012	BOLT, BUTTON HEAD	1					
5	90430–08143	GASKET	1					
6	1RC–15451–00	GASKET, CRANKCASE COVER 1	1					
7	1RC–12564–00	PIPE, WATER	1					
8	93210–28543	O-RING	1					
9	99530–08012	PIN, DOWEL	2					
10	90110–06388	BOLT, HEXAGON SOCKET HEAD	6					
11	90110–06389	BOLT, HEXAGON SOCKET HEAD	2					
12	90110–06394	BOLT, HEXAGON SOCKET HEAD	2					
13	1RC–15484–00	CLAMP 2	1					
14	90110–06168	BOLT, HEXAGON SOCKET HEAD	2					
15	1RC–15199–00	BRACKET	1					
16	1RC–15421–00	COVER, CRANKCASE 2	1					
17	1RC–15461–00	GASKET, CRANKCASE COVER 2	1					
18	93610–20189	PIN, DOWEL	2					
19	90110–06388	BOLT, HEXAGON SOCKET HEAD	11					
20	1RC–15490–00	COVER ASSY	1					
21	1RC–15789–00	.DAMPER	1					
22	90520–03014	.DAMPER, PLATE	1					
23	1RC–15191–00	PLATE	1					
24	5GJ–15363–10	PLUG, OIL	1					
25	93210–19123	O-RING	1					
26	1RC–15416–00	COVER, OIL PUMP	1					
27	1RC–15456–00	GASKET, OIL PUMP COVER 1	1					

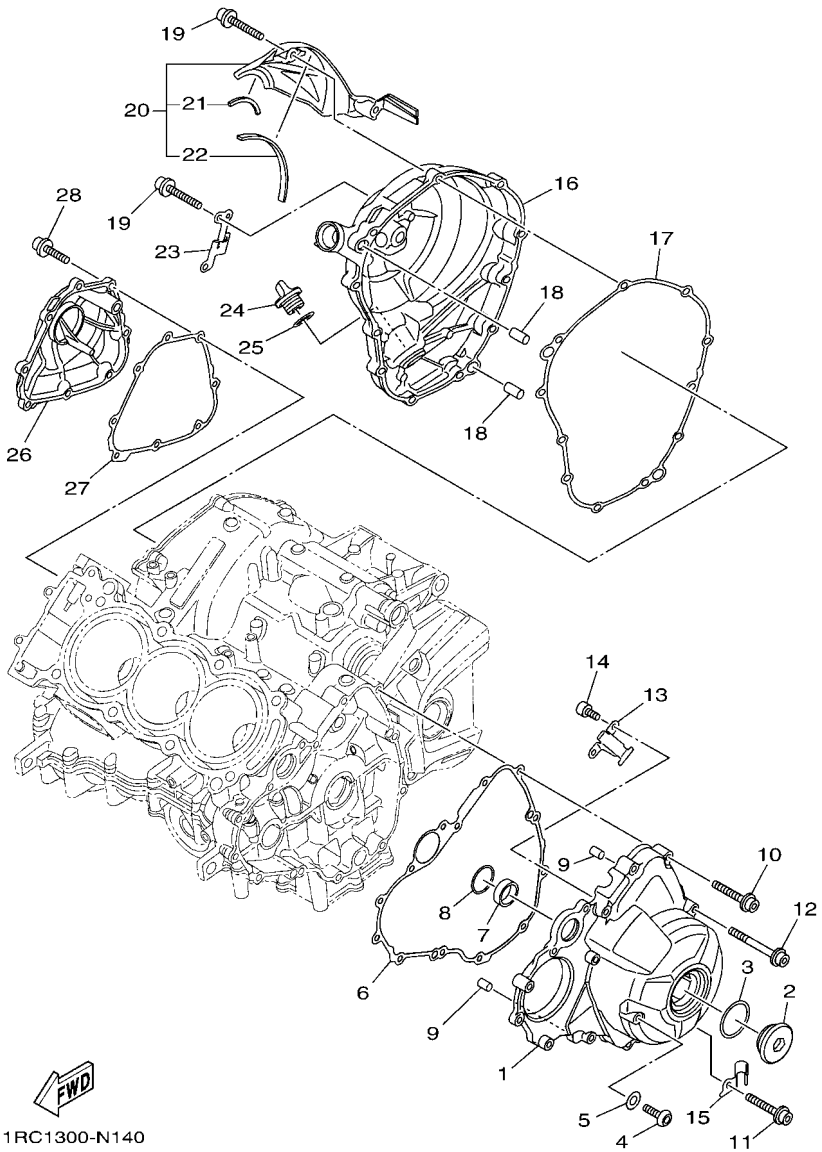

FIG. 14 CRANKCASE COVER 1

REF. NO.	PART NO.	DESCRIPTION	B892					REMARKS
28	90110–06396	BOLT, HEXAGON SOCKET HEAD	8					

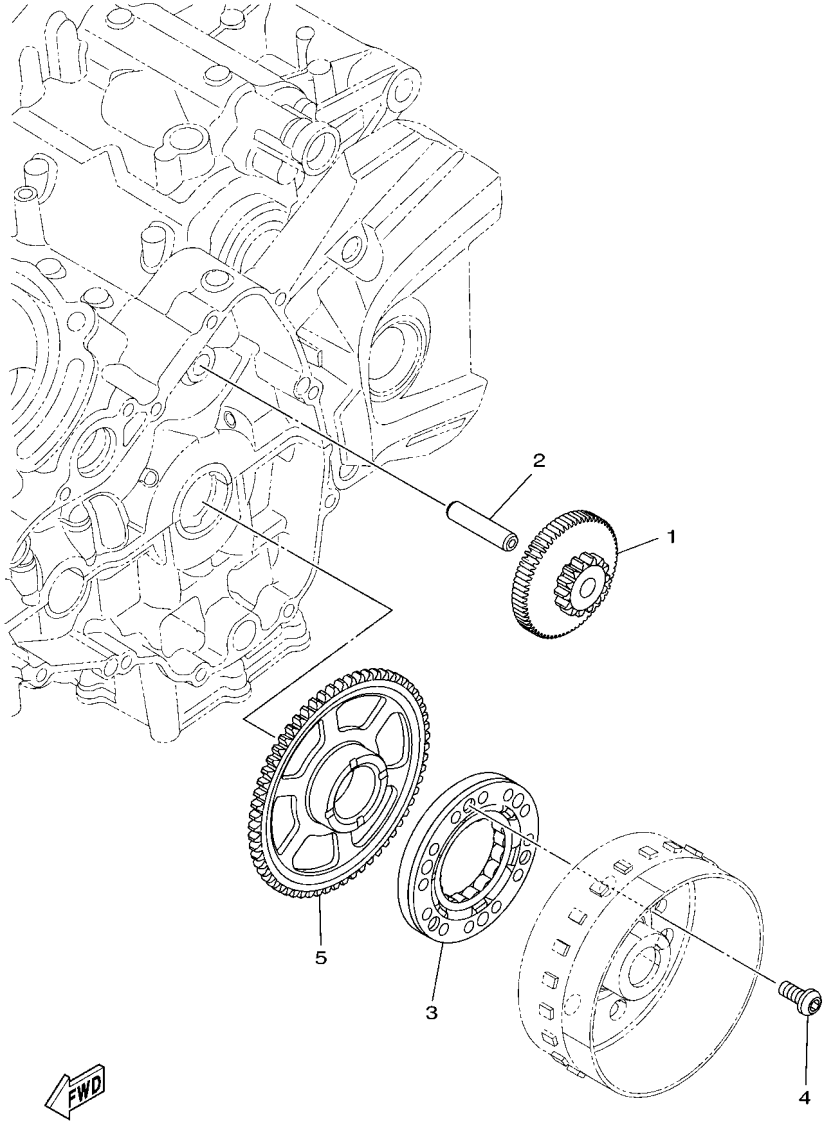

1RC1300-N150

FIG. 15 STARTER

REF. NO.	PART NO.	DESCRIPTION	B892					REMARKS
1	1RC–15512–00	GEAR, IDLER 1	1					
2	5EB–15521–00	SHAFT 1	1					
3	1RC–15590–00	STARTER ONE-WAY ASSY	1					
4	90149–08030	SCREW	3					
5	1RC–15515–00	GEAR 3	1					

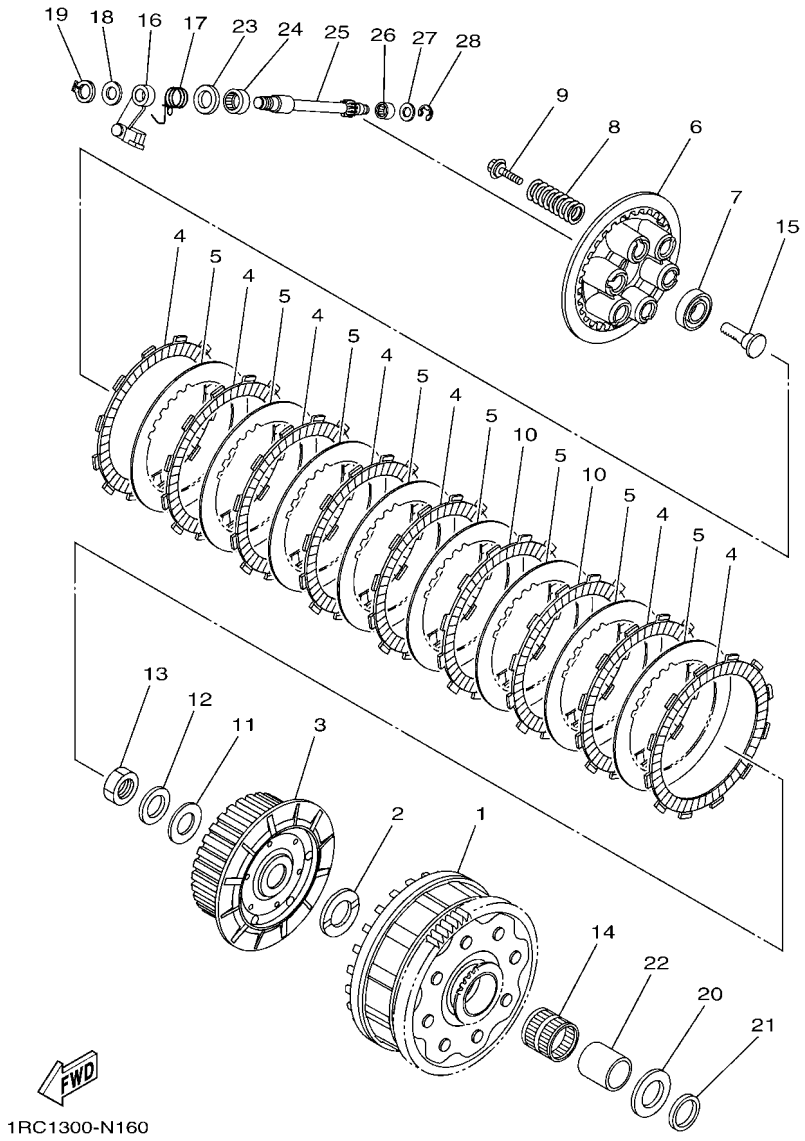

FIG. 16 CLUTCH

REF. NO.	PART NO.	DESCRIPTION	B892					REMARKS
1	1RC–16150–00	PRIMARY DRIVEN GEAR COMP.	1					
2	5VY–16154–00	PLATE, THRUST 1	1					
3	1RC–16371–00	BOSS, CLUTCH	1					
4	5TA–16321–00	PLATE, FRICTION	7					
5	5VY–16325–00	PLATE, CLUTCH 2	8					
6	5VY–16351–10	PLATE, PRESSURE 1	1					
7	93306–00304	BEARING	1					
8	90501–230A0	SPRING, COMPRESSION	6					
9	90119–06257	BOLT, WITH WASHER	6					
10	1RC–16330–00	PLATE, FRICTION 2	2					
11	90201–20030	WASHER, PLATE	1					
12	90208–20001	WASHER, CONICAL SPRING	1					
13	90179–20011	NUT	1					
14	93310–33277	BEARING	1					
15	4XV–16356–01	ROD, PUSH 1	1					
16	1RC–16340–00	PUSH LEVER ASSY	1					
17	90508–18051	SPRING, TORSION	1					
18	90201–10029	WASHER, PLATE	1					
19	99009–10400	CIRCLIP	1					
20	5VY–16164–00	PLATE, THRUST 2	1					
21	2C0–16164–00	PLATE, THRUST 2	1					
22	1RC–16181–00	SPACER 1	1					
23	93102–15212	OIL SEAL	1					
24	93315–21570	BEARING	1					
25	5VY–16382–10	AXLE, PUSH LEVER	1					
26	93317–11096	BEARING	1					
27	92907–08600	WASHER, PLATE	1					

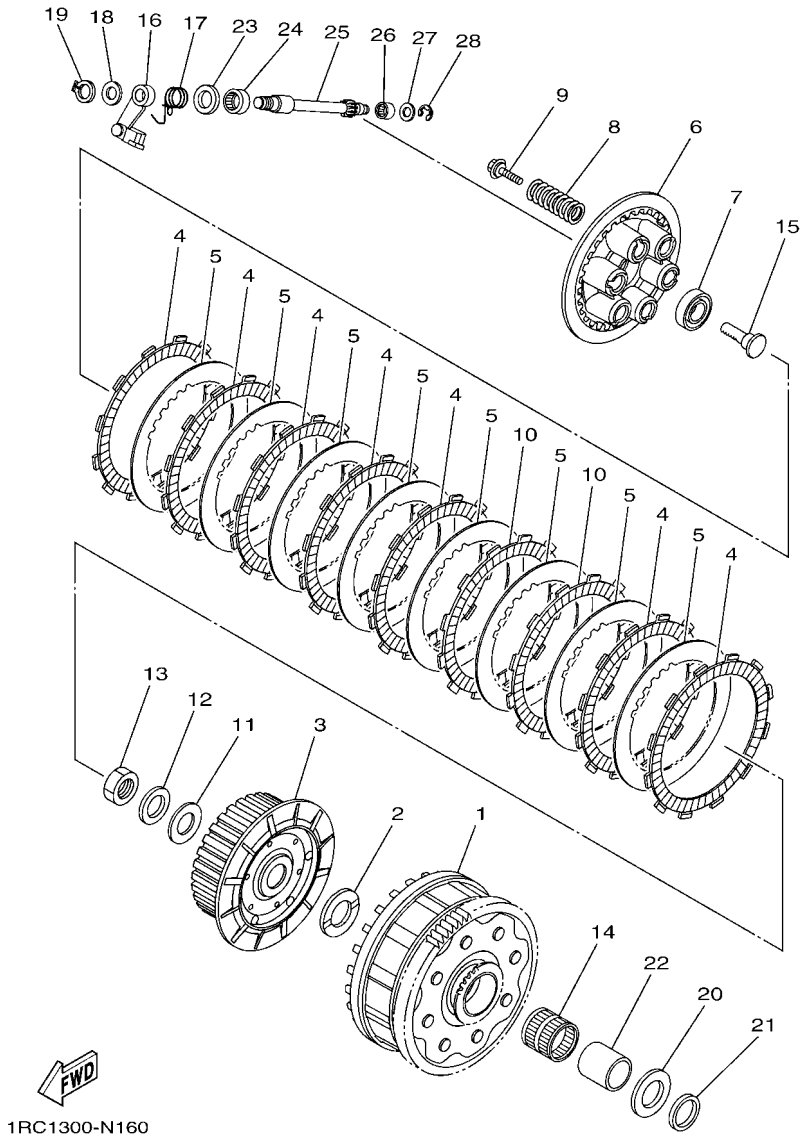

FIG. 16 CLUTCH

REF. NO.	PART NO.	DESCRIPTION	B892					REMARKS
28	99001–07600	CIRCLIP	1					

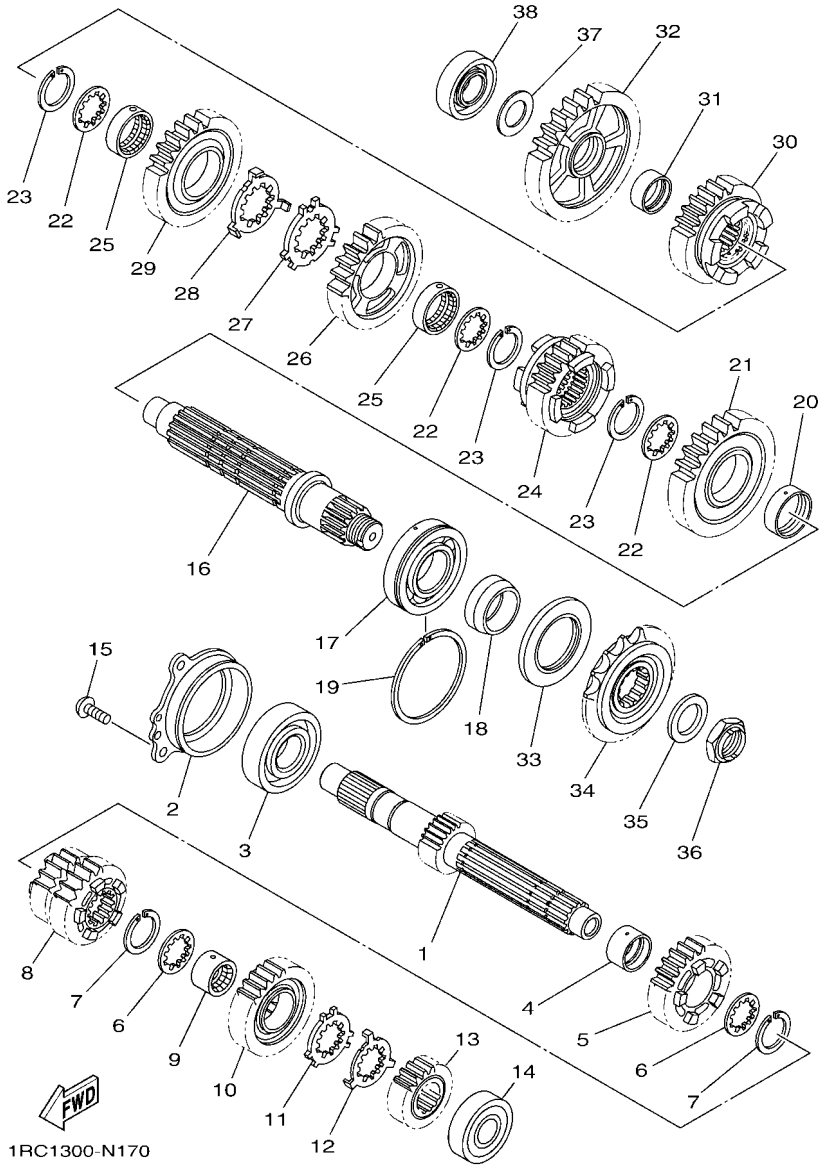

FIG. 17 TRANSMISSION

REF. NO.	PART NO.	DESCRIPTION	B892					REMARKS
1	1RC–17411–00	AXLE, MAIN (15T)	1					
2	1RC–15163–00	HOUSING, BEARING 1	1					
3	93306–30534	BEARING	1					
4	90387–25030	COLLAR	1					
5	1RC–17151–00	GEAR, 5TH PINION (21T)	1					
6	90209–21332	WASHER	2					
7	93440–25186	CIRCLIP	2					
8	1RC–17131–00	GEAR, 3RD PINION (21T/21T)	1					
9	90387–21003	COLLAR	1					
10	1RC–17161–00	GEAR, 6TH PINION (27T)	1					
11	90209–22352	WASHER	1					
12	90209–21351	WASHER	1					
13	1RC–17121–00	GEAR, 2ND PINION (19T)	1					
14	93306–20464	BEARING	1					
15	90149–06082	SCREW	3					
16	1RC–17421–00	AXLE, DRIVE	1					
17	93306–20663	BEARING	1					
18	90387–30012	COLLAR	1					
19	93440–64199	CIRCLIP	1					
20	90387–31003	COLLAR	1					
21	2PP–17221–00	GEAR, 2ND WHEEL (38T)	1					
22	90209–28008	WASHER	3					
23	93440–31187	CIRCLIP	3					
24	2PP–17261–00	GEAR, 6TH WHEEL (28T)	1					
25	90387–28004	COLLAR	2					
26	1RC–17241–00	GEAR, 4TH WHEEL (29T)	1					
27	90214–29002	WASHER, CLAW	1					

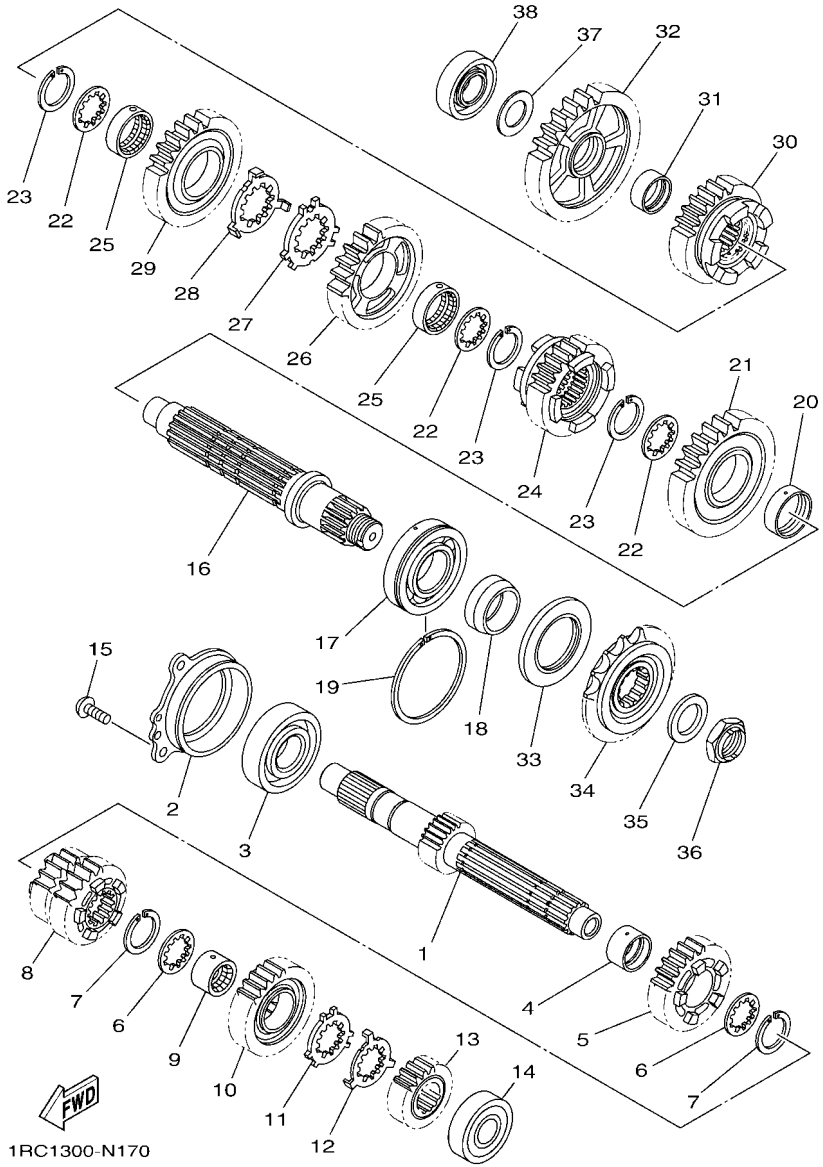

FIG. 17 TRANSMISSION

REF. NO.	PART NO.	DESCRIPTION	B892					REMARKS
28	90214–28002	WASHER, CLAW	1					
29	1RC–17231–00	GEAR, 3RD WHEEL (34T)	1					
30	1RC–17251–10	GEAR, 5TH WHEEL (25T)	1					
31	90387–25008	COLLAR	1					
32	1RC–17211–00	GEAR, 1ST WHEEL (40T)	1					
33	93102–40030	OIL SEAL	1					
34	5PS–17460–00	SPROCKET, DRIVE (16T)	1					
35	90208–22002	WASHER, CONICAL SPRING	1					
36	90179–22018	NUT	1					
37	90201–20008	WASHER, PLATE	1					
38	93306–20464	BEARING	1					

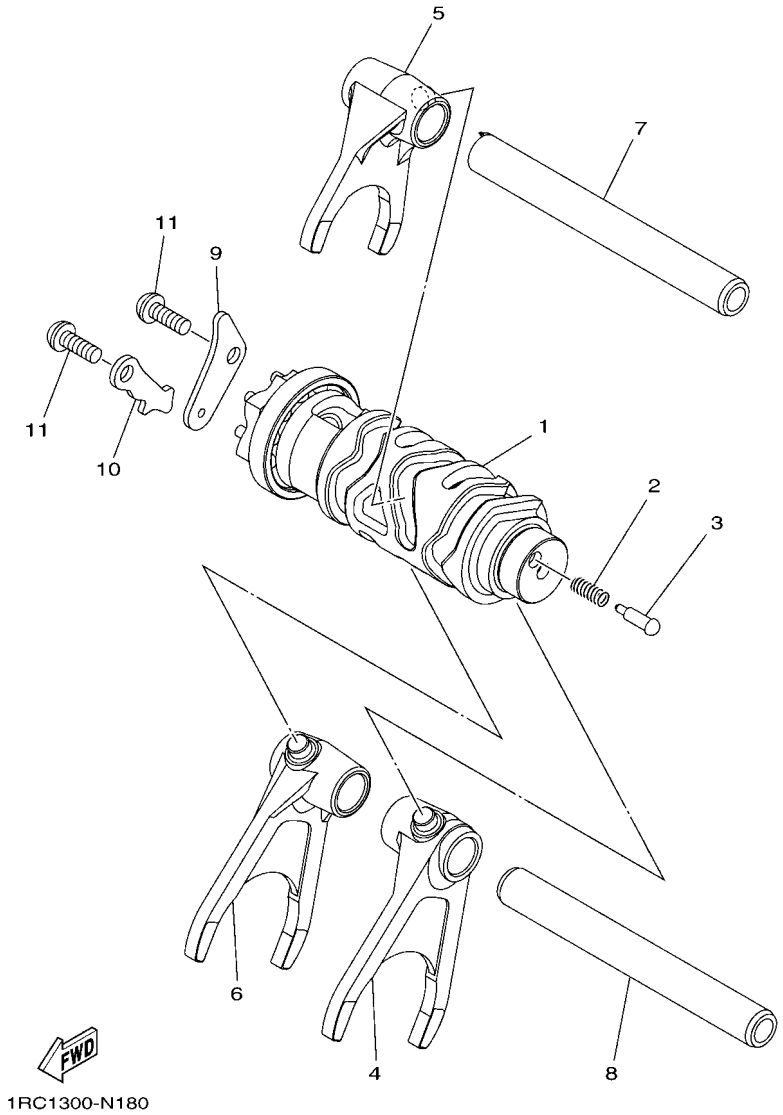

FIG. 18 SHIFT CAM & FORK

REF. NO.	PART NO.	DESCRIPTION	B892					REMARKS
1	1RC–18540–00	SHIFT CAM ASSY	1					
2	90501–06022	SPRING, COMPRESSION	1					
3	3D7–18542–00	POINT, NEUTRAL	1					
4	1RC–18511–00	FORK, SHIFT 1	1					
5	1RC–18512–00	FORK, SHIFT 2	1					
6	1RC–18513–00	FORK, SHIFT 3	1					
7	1RC–18531–00	BAR, SHIFT FORK GUIDE 1	1					
8	20S–18535–00	BAR, SHIFT FORK GUIDE 2	1					
9	2C0–18536–00	STOPPER, SHIFT BAR	1					
10	1RC–18562–00	PLATE, STOPPER 2	1					
11	90149–06158	SCREW	2					

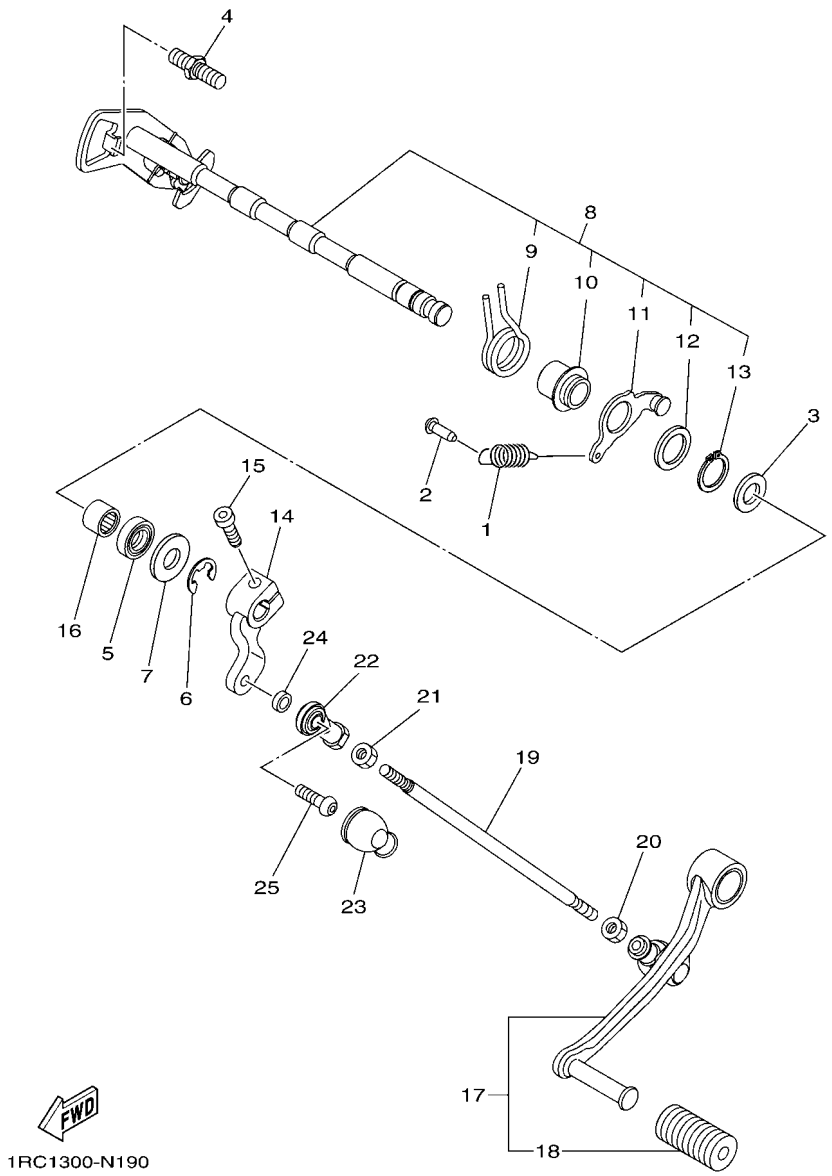

FIG. 19 SHIFT SHAFT

REF. NO.	PART NO.	DESCRIPTION	B892					REMARKS
1	90506–18021	SPRING, TENSION	1					
2	132–16346–00	HOOK, SPRING	1					
3	90201–127E1	WASHER, PLATE	1					
4	1D7–18127–00	STOPPER, SCREW	1					
5	93102–12106	OIL SEAL (SD 12-22-5 HS)	1					
6	99002–10600	CIRCLIP	1					
7	90201–12575	WASHER, PLATE	1					
8	1RC–18101–01	SHIFT SHAFT ASSY	1					
9	90508–32141	.SPRING, TORSION	1					
10	2C0–18175–00	.SPACER	1					
11	1RC–18140–00	.STOPPER LEVER ASSY	1					
12	90201–177G4	.WASHER, PLATE	1					
13	99009–17400	.CIRCLIP	1					
14	1RC–18112–00	ARM, SHIFT	1					
15	91312–06020	BOLT	1					
16	93317–11295	BEARING	1					
17	1RC–18110–00	SHIFT PEDAL ASSY	1					
18	5EB–18113–00	.COVER, SHIFT PEDAL	1					
19	3VD–18115–00	ROD, SHIFT	1					
20	90170–06228	NUT (COUNTER CLOCKWISE)	1					
21	95304–06700	NUT	1					
22	5VX–18116–00	JOINT, ROD 1	1					
23	5VX–18154–00	COVER, DUST	1					
24	90387–06372	COLLAR	1					
25	90111–06098	BOLT,HEX. SOCKET BUTTON	1					

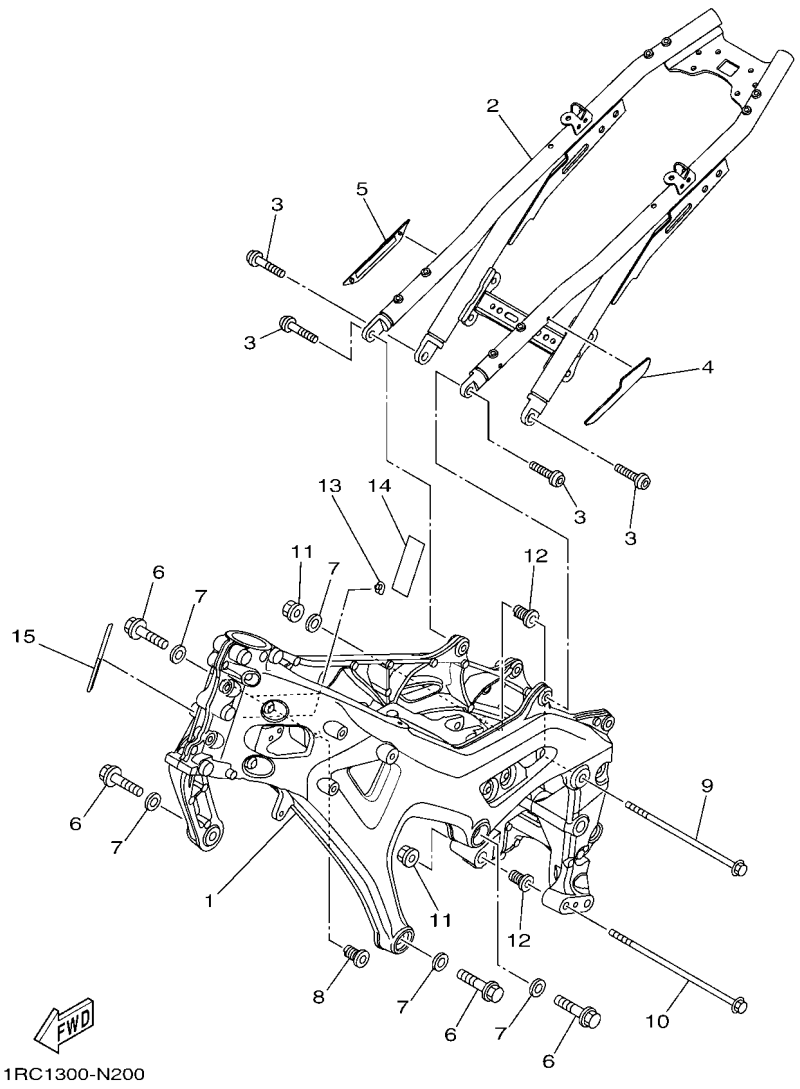

FIG. 20 FRAME

REF. NO.	PART NO.	DESCRIPTION	B892					REMARKS
1	1RC–21110–40	FRAME COMP.	1					
2	1RC–21190–00	REAR FRAME COMP.	1					
3	90149–10059	SCREW	4					
4	1RC–2117X–00	COVER 9	1					
5	1RC–2117Y–00	COVER 10	1					
6	90110–10043	BOLT, HEXAGON SOCKET HEAD	4					
7	90201–10075	WASHER, PLATE	5					
8	1RC–21495–00	BOLT, ENGINE ADJUSTING	1					
9	90105–10391	BOLT, FLANGE	1					
10	90105–10437	BOLT, FLANGE	1					
11	90179–10024	NUT	2					
12	4C8–21495–00	BOLT, ENGINE ADJUSTING	2					
13	5VX–21289–00	PLUG, BLIND	1					
14	34D–82176–00	DAMPER	1					
15	1RC–2117G–00	PROTECTOR	1					

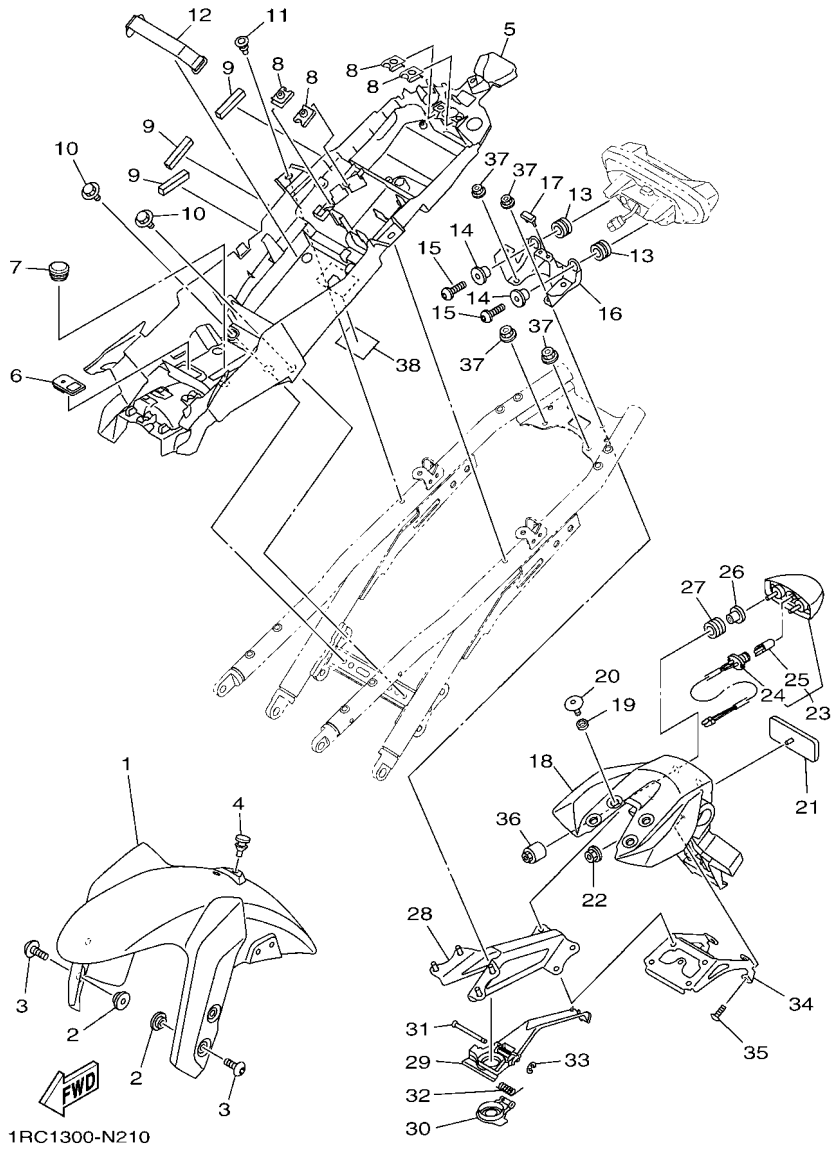

FIG. 21 FENDER

REF. NO.	PART NO.	DESCRIPTION	B892					REMARKS
1	1RC–21511–00–P0	FENDER, FRONT	1					UR MBL2 FOR MS1
	1RC–21511–00–P8	FENDER, FRONT	1					UR FOR BNS4
2	90387–06153	COLLAR	4					
3	90110–06200	BOLT, HEXAGON SOCKET HEAD	4					
4	90480–06M19	GROMMET	1					
5	1RC–8212B–00	BOX, BATTERY 1	1					
6	1RC–26199–00	PLUG, BLIND	1					
7	90480–14100	GROMMET	3					
8	90183–06069	NUT, SPRING	4					
9	5PS–28372–00	DAMPER	3					
10	90109–06202	BOLT	2					
11	90269–07007	RIVET	2					
12	1RC–82137–00	BAND, BATTERY	1					
13	90480–14052	GROMMET	2					
14	90387–06288	COLLAR	2					
15	92012–06020	BOLT, BUTTON HEAD	2					
16	1RC–2117E–00	BRACKET, TAILLIGHT	1					
17	682–44532–00	STOPPER, UPPER MOUNT	1					
18	1RC–21629–01	GUARD, MUD	1					
19	90387–06372	COLLAR	4					
20	90111–06061	BOLT,HEX. SOCKET BUTTON	4					
21	3Y6–85130–02	REAR REFLECTOR ASSY	1					
22	95602–05200	NUT, SELF-LOCKING	1					
23	1RC–84740–00	LICENCE LIGHT ASSY	1					
24	1RC–84547–00	.CORD, LICENCE LIGHT	1					
25	1TP–84347–00	.BULB (12V-5W)	1					
26	90387–05042	COLLAR	2					

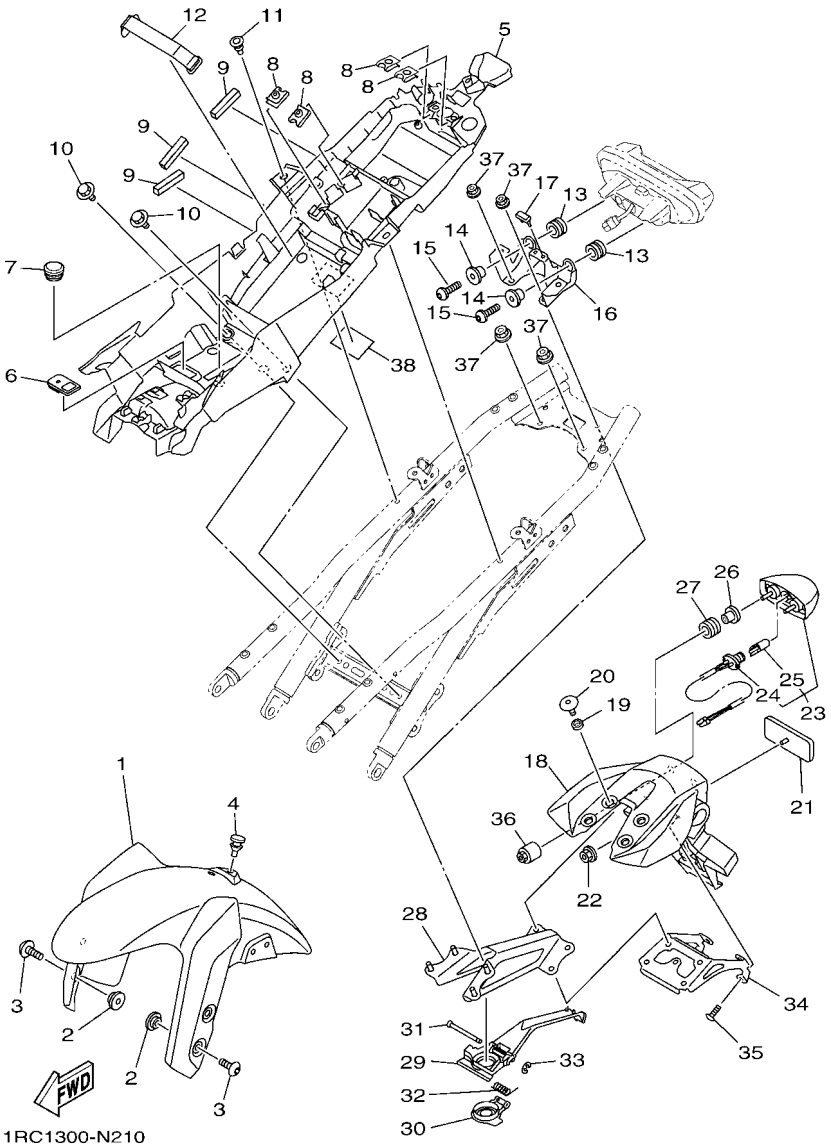

FIG. 21 FENDER

REF. NO.	PART NO.	DESCRIPTION	B892					REMARKS
27	90480–11009	GROMMET	2					
28	1RC–2164F–00	STAY 1	1					
29	1RC–2163E–00	COVER, REAR FENDER 2	1					
30	1RC–2465B–00	CAP, ROTOR	1					
31	90249–03002	PIN	1					
32	90508–09007	SPRING, TORSION	1					
33	93430–02001	CIRCLIP	1					
34	1RC–21682–00	STAY, PLATE	1					
35	90160–05012	SCREW, ROUND TAPPING	4					
36	1RC–2622H–00	WEIGHT	2					
37	95602–06200	NUT, SELF-LOCKING	4					
38	14B–21668–00	LABEL, TIRE	1					

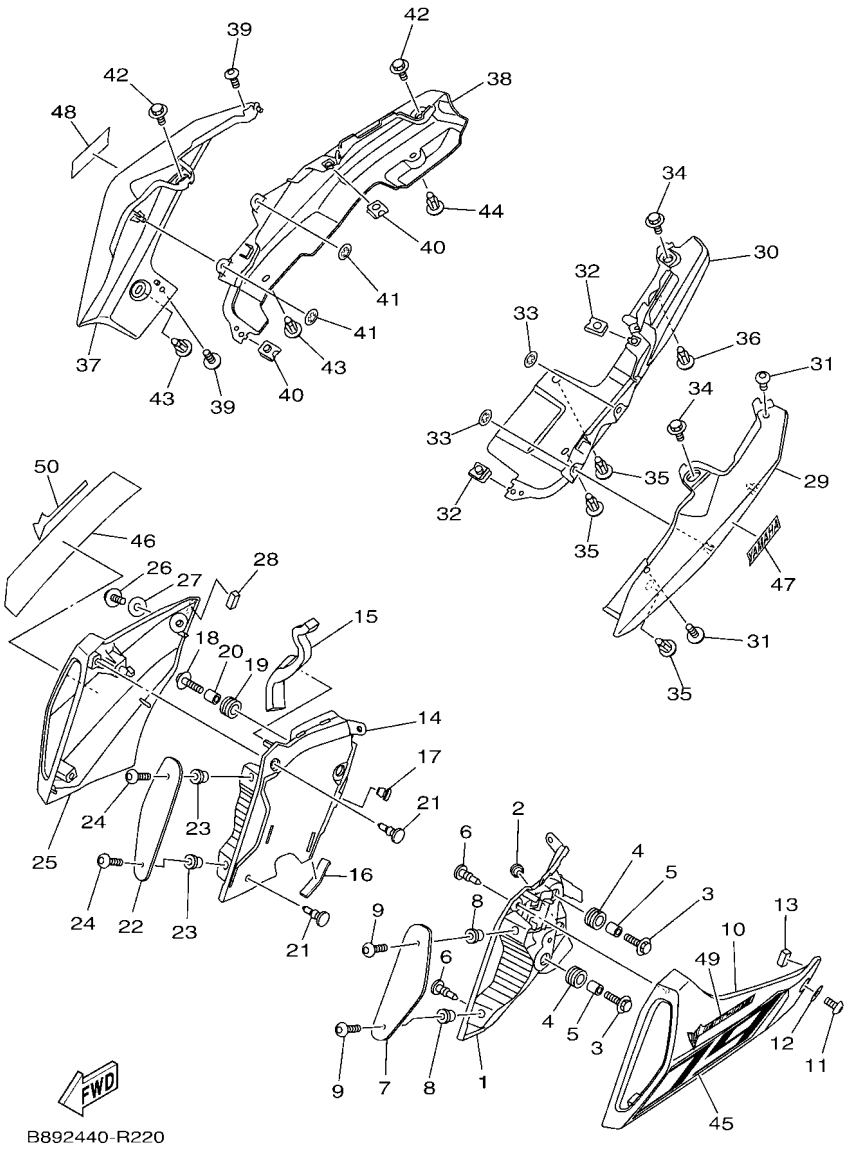

FIG. 22 SIDE COVER

REF. NO.	PART NO.	DESCRIPTION	B892					REMARKS
1	1RC–2172E–00	STAY, SIDE COVER 1	1					
2	90338–06018	PLUG	1					
3	90119–06267	BOLT, WITH WASHER	2					
4	90480–14003	GROMMET	2					
5	90387–06057	COLLAR	2					
6	90269–06001	RIVET	2					
7	1RC–2837N–00	GRILL, AIR INTAKE 1	1					
8	90179–05523	NUT	2					
9	90111–05039	BOLT,HEX. SOCKET BUTTON	2					
10	1RC–2137W–00–P0	SCOOP, AIR 1	1					MBL2 FOR MS1,BNS4
11	90111–05002	BOLT,HEX. SOCKET BUTTON	1					
12	90202–05180	WASHER, PLATE	1					
13	1RC–21747–00	DAMPER	1					
14	1RC–2174E–00	STAY, SIDE COVER 2	1					
15	90520–10022	DAMPER, PLATE	1					
16	90520–10003	DAMPER, PLATE	1					
17	90338–06018	PLUG	1					
18	90119–06267	BOLT, WITH WASHER	2					
19	90480–14003	GROMMET	2					
20	90387–06057	COLLAR	2					
21	90269–06001	RIVET	2					
22	1RC–2837N–00	GRILL, AIR INTAKE 1	1					
23	90179–05523	NUT	2					
24	90111–05039	BOLT,HEX. SOCKET BUTTON	2					
25	1RC–2137X–00–P0	SCOOP, AIR 2	1					MBL2 FOR MS1,BNS4
26	90111–05002	BOLT,HEX. SOCKET BUTTON	1					
27	90202–05180	WASHER, PLATE	1					

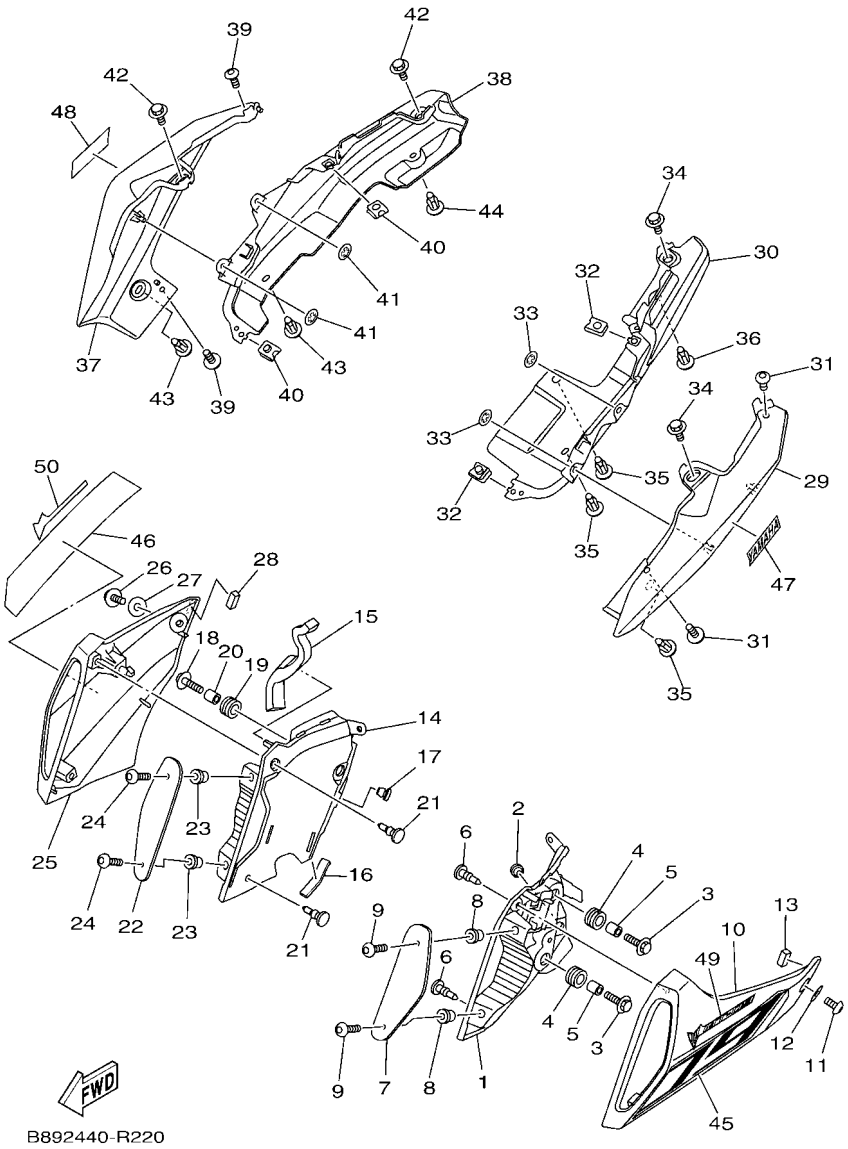

FIG. 22 SIDE COVER

REF. NO.	PART NO.	DESCRIPTION	B892					REMARKS
28	1RC–21747–00	DAMPER	1					
29	1RC–21711–00–P0	COVER, SIDE 1	1					MBL2 FOR MS1,BNS4
30	1RC–21731–00	COVER, SIDE 3	1					
31	90111–05002	BOLT,HEX. SOCKET BUTTON	2					
32	90183–05076	NUT, SPRING	2					
33	90183–05M02	NUT, SPRING	2					
34	90109–06174	BOLT	2					
35	90269–07007	RIVET	3					
36	90269–07014	RIVET	1					
37	1RC–21721–00–P0	COVER, SIDE 2	1					MBL2 FOR MS1,BNS4
38	1RC–21741–00	COVER, SIDE 4	1					
39	90111–05002	BOLT,HEX. SOCKET BUTTON	2					
40	90183–05076	NUT, SPRING	2					
41	90183–05M02	NUT, SPRING	2					
42	90109–06174	BOLT	2					
43	90269–07007	RIVET	2					
44	90269–07014	RIVET	1					
45	1RC–2173E–00	GRAPHIC 1	1					UR FOR MS1
	1RC–2173E–50	GRAPHIC 1	1					UR FOR BNS4
46	1RC–2173F–00	GRAPHIC 2	1					UR FOR MS1
	1RC–2173F–50	GRAPHIC 2	1					UR FOR BNS4
47	4B5–2153E–00	EMBLEM, YAMAHA	1					UR FOR MS1
	4B5–2153E–50	EMBLEM, YAMAHA	1					UR FOR BNS4
48	4B5–2153E–00	EMBLEM, YAMAHA	1					UR FOR MS1
	4B5–2153E–50	EMBLEM, YAMAHA	1					UR FOR BNS4
49	1RC–21781–00	EMBLEM 1	1					FOR MS1
50	1RC–21782–00	EMBLEM 2	1					FOR MS1

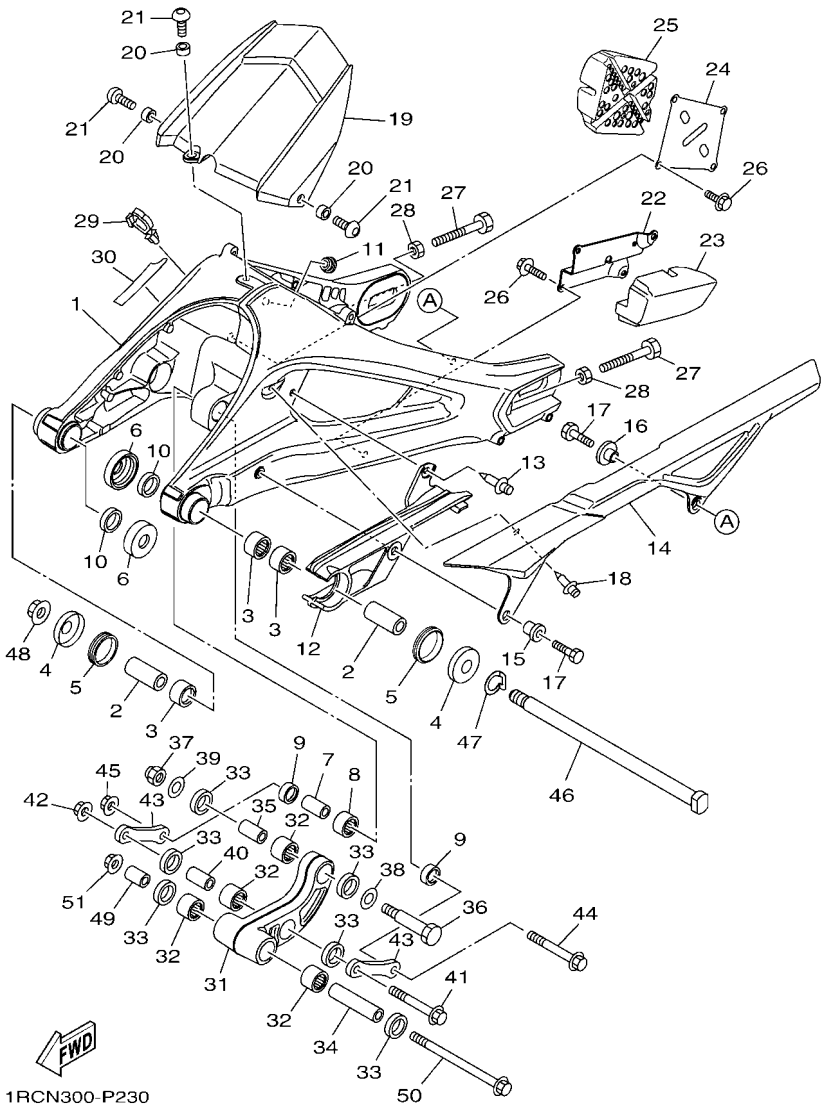

FIG. 23 REAR ARM

REF. NO.	PART NO.	DESCRIPTION	B892					REMARKS
1	1RC–22110–00	REAR ARM COMP.	1					
2	90380–16134	BUSH, SOLID	2					
3	93317–22262	BEARING	3					
4	30X–2219X–00	COVER	2					
5	93108–35004	OIL SEAL (35-41-8)	2					
6	20S–22128–00	COVER, THRUST 1	2					
7	90387–102R4	COLLAR	1					
8	93315–31758	BEARING	1					
9	93109–17071	OIL SEAL	2					
10	93106–22002	OIL SEAL	2					
11	90480–12012	GROMMET	1					
12	1RC–22151–00	SEAL, GUARD	1					
13	90269–07007	RIVET	1					
14	1RC–22311–00	CASE, CHAIN	1					
15	90387–062X0	COLLAR	1					
16	90387–06066	COLLAR	1					
17	97002–06016	BOLT, HEXAGON	2					
18	90269–07007	RIVET	1					
19	1RC–21650–00	REAR FENDER COMP.	1					
20	90387–06022	COLLAR	3					
21	90111–06151	BOLT,HEX. SOCKET BUTTON	3					
22	1RC–2221A–00	BRACKET 1	1					
23	1RC–2214F–00	DAMPER 1	1					
24	1RC–2221B–00	BRACKET 2	1					
25	1RC–2214G–00	DAMPER 2	1					
26	90105–06126	BOLT, FLANGE	8					
27	90101–08013	BOLT	2					

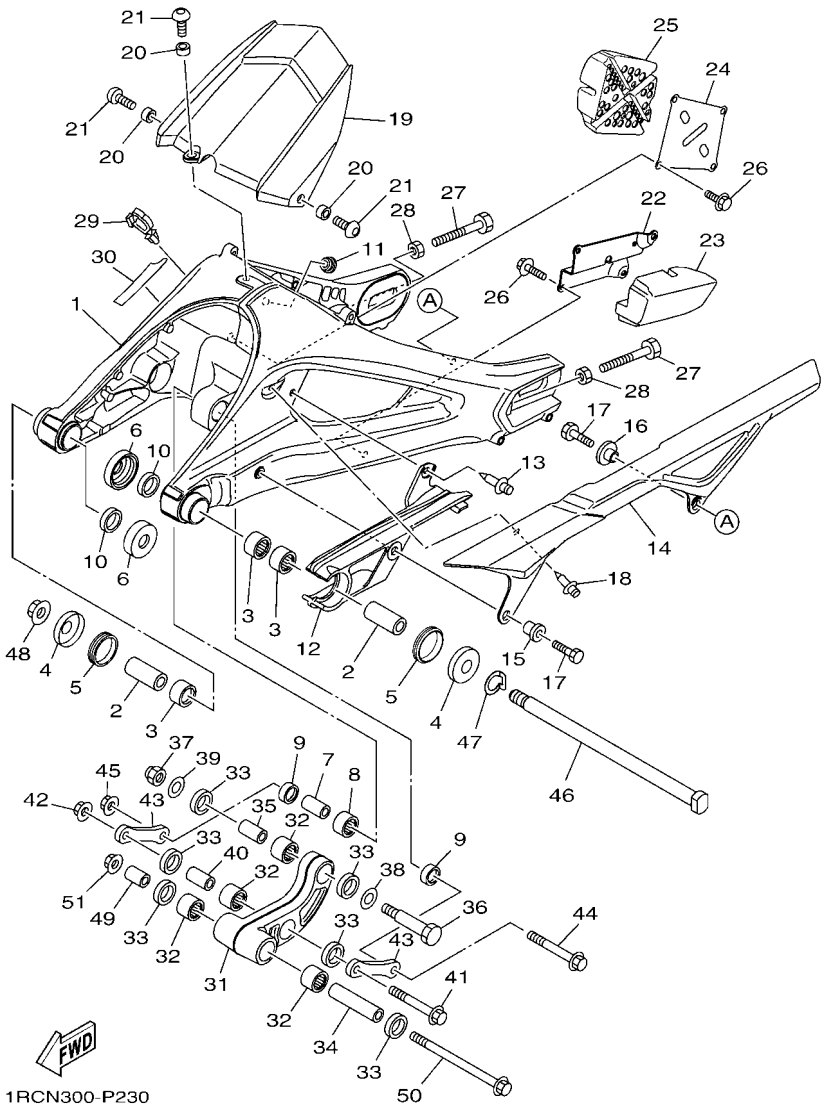

FIG. 23 REAR ARM

REF. NO.	PART NO.	DESCRIPTION	B892					REMARKS
28	95302–08600	NUT, HEXAGON	2					
29	90464–18002	CLAMP	1					
30	1RC–22358–00	SEAL 1	1					
31	1RC–2217A–00	ARM, RELAY	1					
32	93315–31758	BEARING	4					
33	93109–17071	OIL SEAL	6					
34	3GB–23448–00	SPACER	1					
35	90387–127W0	COLLAR	1					
36	90109–10027	BOLT	1					
37	95612–10100	NUT, U	1					
38	90201–13015	WASHER, PLATE	1					
39	90201–10035	WASHER, PLATE	1					
40	90387–102R4	COLLAR	1					
41	90105–10210	BOLT, FLANGE	1					
42	95602–10200	NUT, U FLANGE	1					
43	1RC–2217M–00	ARM 1	2					
44	90105–10210	BOLT, FLANGE	1					
45	95602–10200	NUT, U FLANGE	1					
46	46X–22141–00	SHAFT, PIVOT	1					
47	1RC–22159–00	WASHER, SPRING LOWER	1					
48	95602–14200	NUT, SELF-LOCKING	1					
49	90387–10106	COLLAR	1					
50	90105–10174	BOLT, FLANGE	1					
51	95602–10200	NUT, U FLANGE	1					

FIG. 24 REAR SUSPENSION

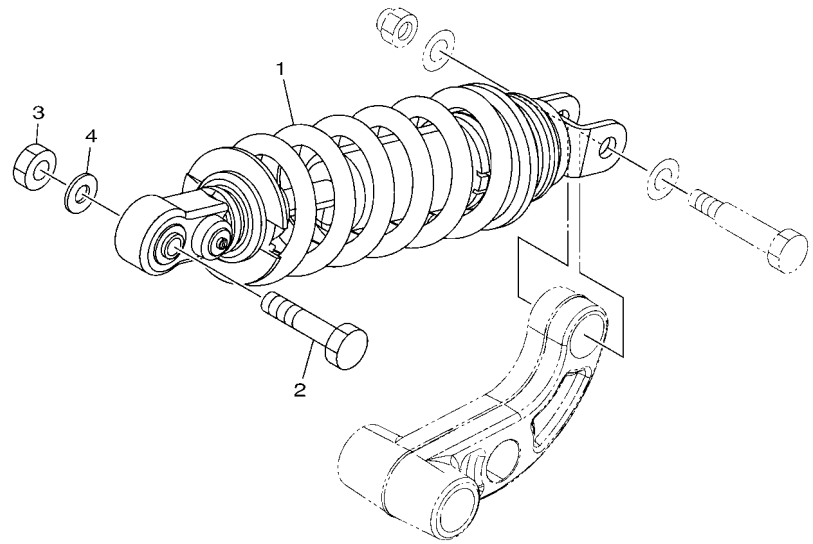

1RC1300-N240

REF. NO.	PART NO.	DESCRIPTION	B892					REMARKS
1	1RC–22210–41	SHOCK ABSORBER ASSY, REAR	1					UR FOR MS1
	1RC–22210–01	SHOCK ABSORBER ASSY, REAR	1					UR FOR BNS4
2	90101–10042	BOLT	1					
3	95602–10100	NUT, U	1					
4	90201–101J1	WASHER, PLATE	1					

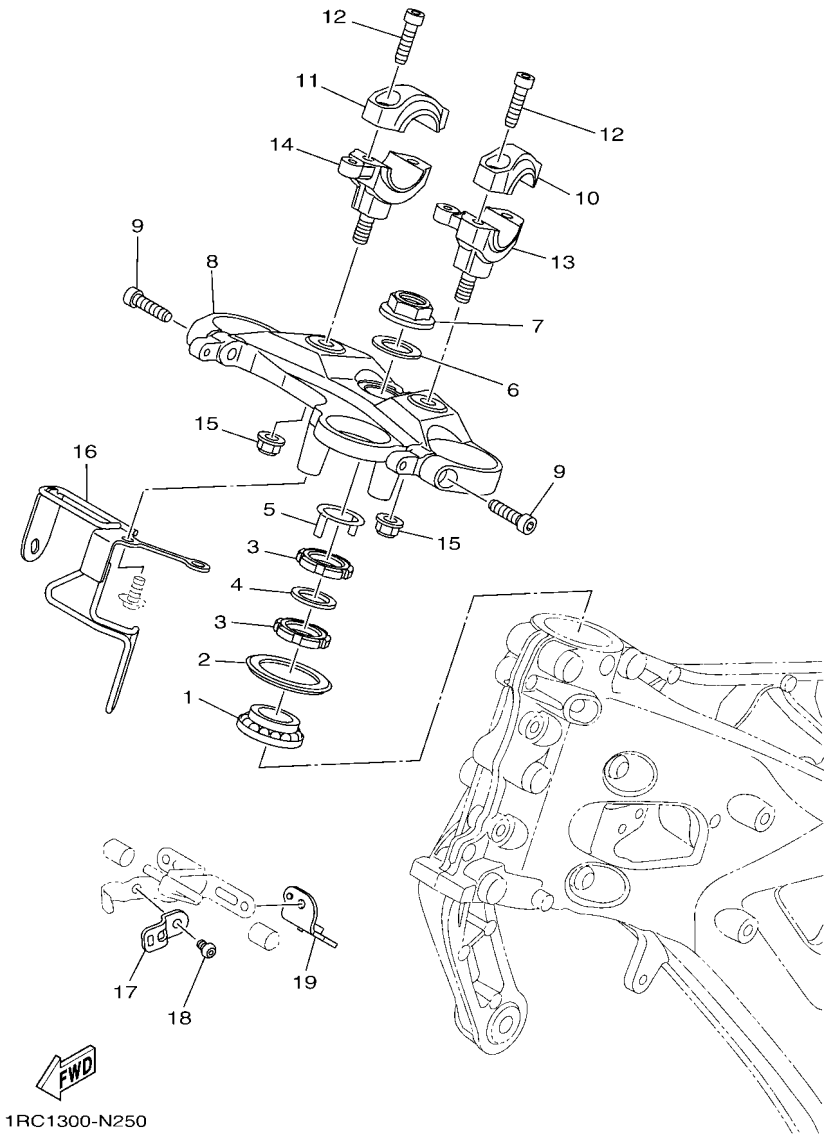

FIG. 25 STEERING

REF. NO.	PART NO.	DESCRIPTION	B892					REMARKS
1	93399–99931	BEARING	1					
2	5VX–23415–00	COVER, BALL RACE 1	1					
3	90179–25004	NUT	2					
4	90202–26142	WASHER, PLATE	1					
5	26H–23418–01	WASHER, SPECIAL	1					
6	90201–22018	WASHER, PLATE	1					
7	1RC–23393–00	NUT, SPECIAL	1					
8	1RC–23435–30	CROWN, HANDLE	1					
9	91314–08030	BOLT, HEXAGON SOCKET HEAD	2					
10	1RC–23441–11	HOLDER, HANDLE UPPER	1					
11	1RC–2344A–11	HOLDER, HANDLE UPPER 1	1					
12	91314–08030	BOLT, HEXAGON SOCKET HEAD	4					
13	1RC–24847–11	HOLDER 1	1					
14	1RC–24848–11	HOLDER 2	1					
15	95602–10200	NUT, U FLANGE	2					
16	1RC–23389–00	GUIDE, CABLE	1					
17	5SL–25876–00	HOLDER, BRAKE HOSE 2	1					
18	92017–06012	BOLT, BUTTON HEAD	1					
19	1RC–23377–00	BRACKET, HORN	1					

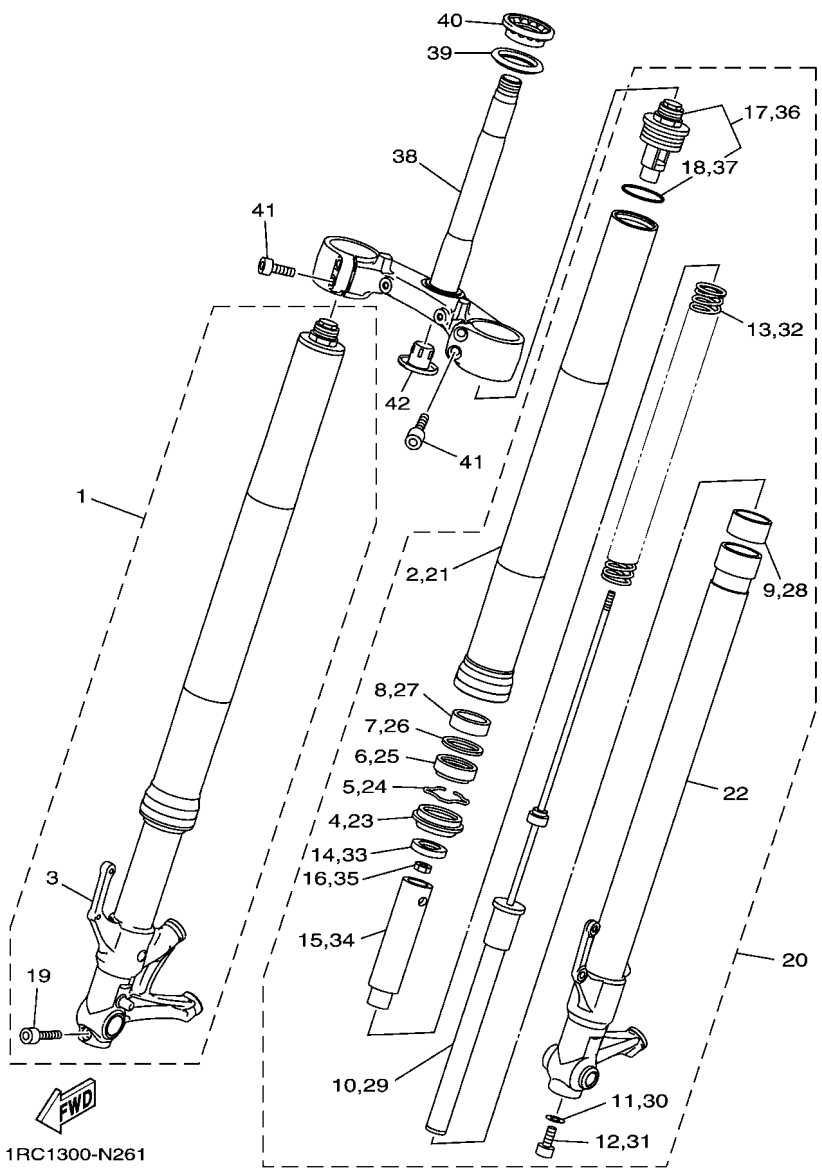

FIG. 26 FRONT FORK

REF. NO.	PART NO.	DESCRIPTION	B892					REMARKS
1	1RC–23103–30	FRONT FORK ASSY (R.H)	1					UR FOR MS1
	1RC–23103–40	FRONT FORK ASSY (R.H)	1					UR FOR BNS4
2	2PP–23126–10	.TUBE, OUTER (L.H)	1					UR FOR MS1
	1RC–23126–40	.TUBE, OUTER (L.H)	1					UR FOR BNS4
3	1RC–23120–01	.INNER TUBE COMP.2	1					
4	4EB–23144–00	.SEAL, DUST	1					
5	26H–23156–00	.RING, SNAP	1					
6	4EB–23145–01	.OIL SEAL	1					
7	36Y–23146–10	.WASHER, OIL SEAL	1					
8	1RC–23125–00	.METAL, SLIDE 1	1					
9	4FM–23171–40	.METAL, SLIDE	1					
10	1RC–23170–10	.CYLINDER COMP., FRONT FORK	1					
11	509–23158–L0	.GASKET	1					(KYB)
12	278–23181–50	.BOLT, HEXAGON SOCKET HEAD	1					
13	1RC–23141–00	.SPRING, FRONT FORK	1					
14	5VY–12277–00	.WASHER	1					
15	1RC–23118–00	.SPACER	1					
16	3LC–23357–00	.NUT	1					
17	2PP–23111–10	.BOLT, CAP	1					
18	3XJ–23147–L0	..O-RING	1					
19	91314–08035	.BOLT, HEXAGON SOCKET HEAD	1					
20	1RC–23102–30	FRONT FORK ASSY (L.H)	1					UR FOR MS1
	1RC–23102–40	FRONT FORK ASSY (L.H)	1					UR FOR BNS4
21	2PP–23126–10	.TUBE, OUTER (L.H)	1					UR FOR MS1
	1RC–23126–40	.TUBE, OUTER (L.H)	1					UR FOR BNS4
22	1RC–23110–01	.INNER TUBE COMP.1	1					
23	4EB–23144–00	.SEAL, DUST	1					

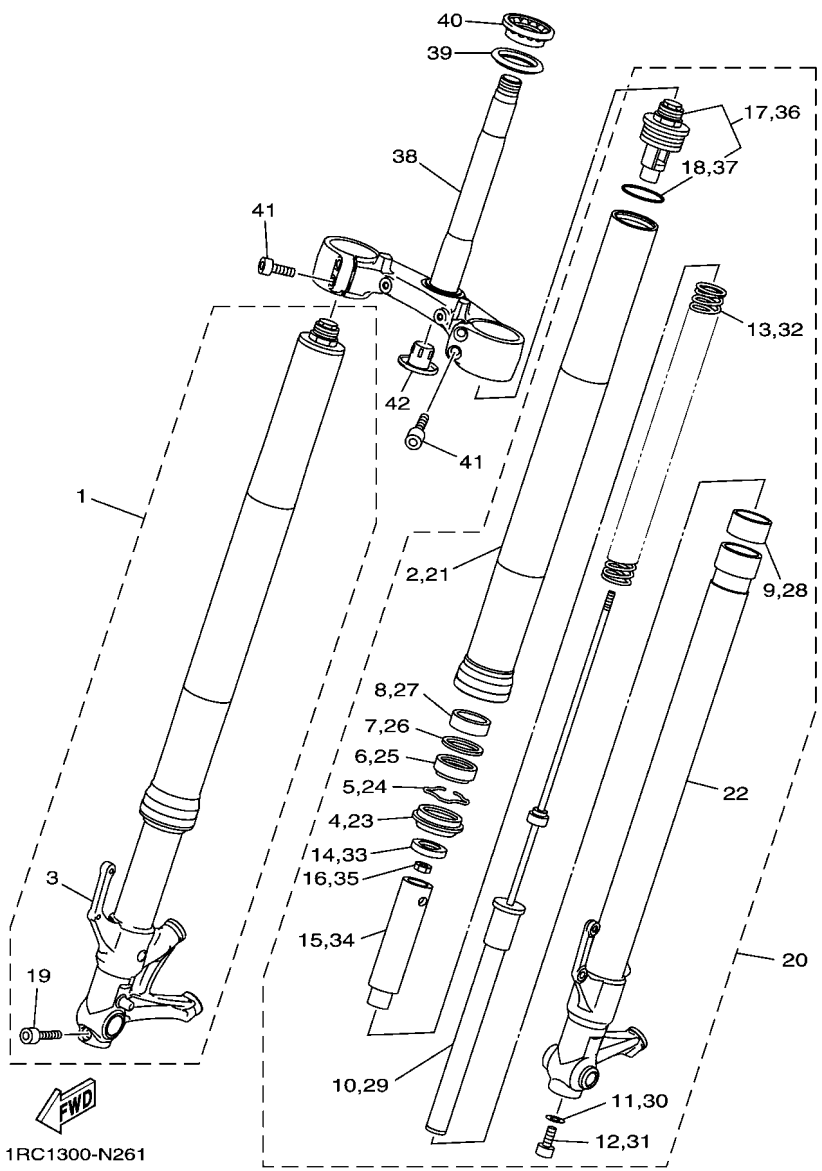

FIG. 26 FRONT FORK

REF. NO.	PART NO.	DESCRIPTION	B892					REMARKS
24	26H–23156–00	.RING, SNAP	1					
25	4EB–23145–01	.OIL SEAL	1					
26	36Y–23146–10	.WASHER, OIL SEAL	1					
27	1RC–23125–00	.METAL, SLIDE 1	1					
28	4FM–23171–40	.METAL, SLIDE	1					
29	1RC–23170–00	.CYLINDER COMP., FRONT FORK	1					
30	509–23158–L0	.GASKET	1					(KYB)
31	278–23181–50	.BOLT, HEXAGON SOCKET HEAD	1					
32	1RC–23141–00	.SPRING, FRONT FORK	1					
33	5VY–12277–00	.WASHER	1					
34	1RC–23118–00	.SPACER	1					
35	3LC–23357–00	.NUT	1					
36	2PP–23111–00	.BOLT, CAP	1					
37	3XJ–23147–L0	..O-RING	1					
38	1RC–23340–11	UNDER BRACKET COMP.	1					
39	3FV–23462–00	SEAL, STEERING	1					
40	93399–99932	BEARING	1					
41	91314–08030	BOLT, HEXAGON SOCKET HEAD	4					
42	4KM–23123–01	COVER, UNDER 1	1					

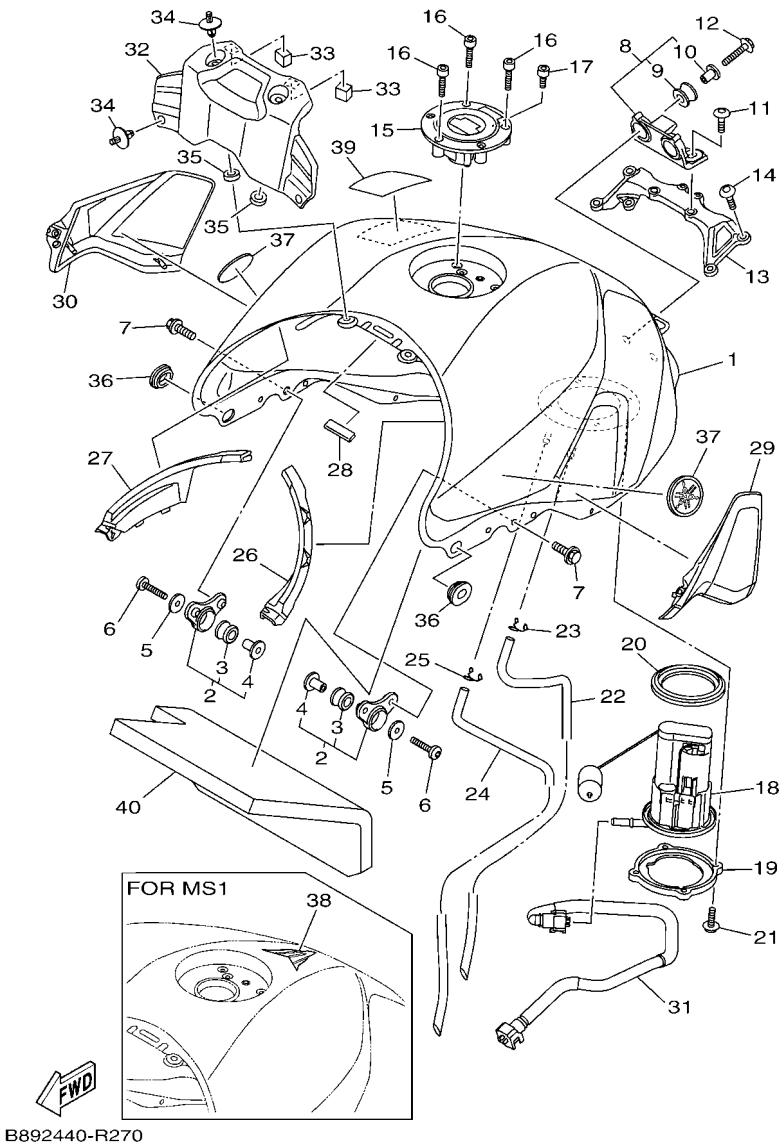

FIG. 27 FUEL TANK

REF. NO.	PART NO.	DESCRIPTION	B892					REMARKS
1	1RC–24110–00–P5	FUEL TANK COMP.	1					UR FOR MS1
	1RC–Y2410–00–08	FUEL TANK COMP.	1					UR FOR BNS4
2	23P–24104–01	TANK BRACKET ASSY	2					
3	90480–18008	.GROMMET	1					
4	90387–06266	.COLLAR	1					
5	90201–06072	WASHER, PLATE	2					
6	92012–06035	BOLT, BUTTON HEAD	2					
7	90119–06200	BOLT, WITH WASHER	4					
8	1RC–24104–00	TANK BRACKET ASSY	1					
9	3D7–24339–00	.GROMMET	2					
10	90387–06136	.COLLAR	2					
11	90111–06136	BOLT,HEX. SOCKET BUTTON	2					
12	95812–06025	BOLT, FLANGE	2					
13	1RC–2413Y–00	BRACKET, TANK FITTING	1					
14	92017–06020	BOLT, BUTTON HEAD	4					
15	39P–24602–10	CAP ASSY	1					
16	90110–05112	BOLT, HEXAGON SOCKET HEAD	3					
17	91312–05010	BOLT	1					
18	1RC–13907–00	FUEL PUMP COMP.	1					
19	1RC–24491–00	BRACKET, FUEL PUMP	1					
20	1RC–24486–00	O-RING	1					
21	90110–05028	BOLT, HEXAGON SOCKET HEAD	4					
22	1RC–24315–00	PIPE 5	1					
23	90467–09006	CLIP	1					
24	1RC–24316–00	PIPE 6	1					
25	90467–09006	CLIP	1					
26	1RC–2418B–01	MOLE, FUEL TANK 1	1					

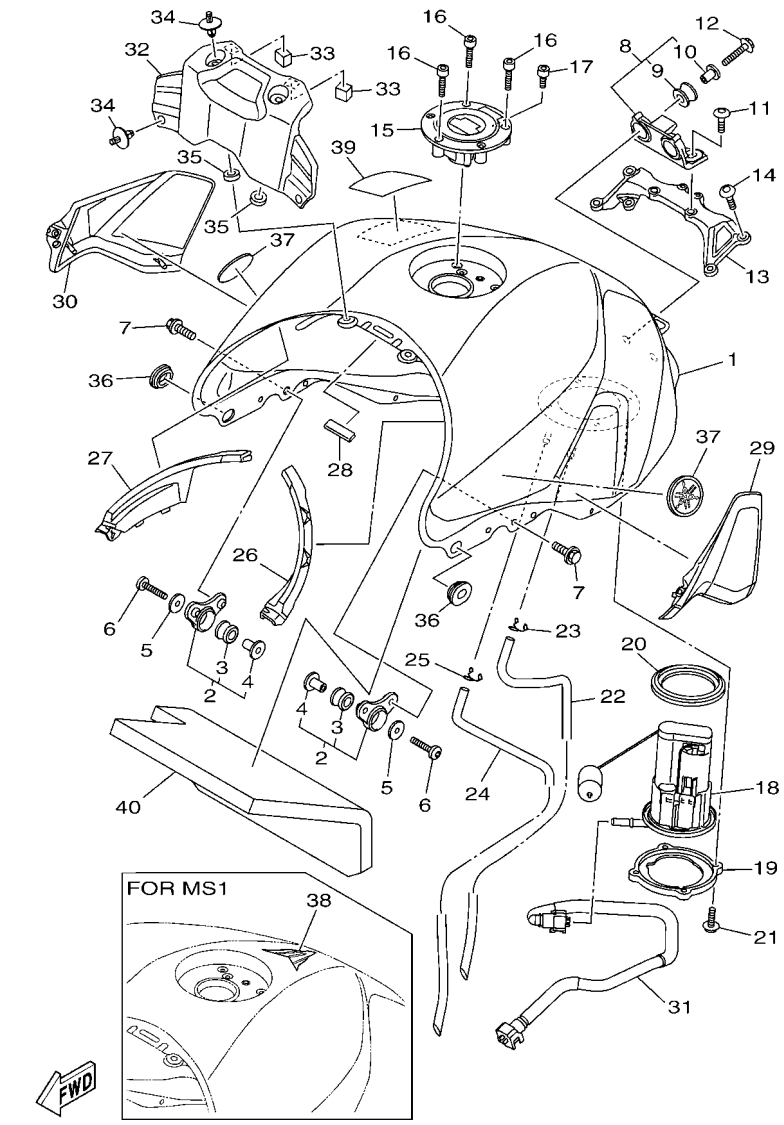

B892440-R270

FIG. 27 FUEL TANK

REF. NO.	PART NO.	DESCRIPTION	B892					REMARKS
27	1RC–2419B–01	MOLE, FUEL TANK 2	1					
28	2S3–28347–00	MOLE 3	1					
29	1RC–24106–00	TANK SIDE COVER ASSY 1	1					
30	1RC–24108–00	TANK SIDE COVER ASSY 2	1					
31	1RC–13971–10	PIPE, FUEL 1	1					
32	1RC–241B1–00	COVER, TANK	1					
33	90520–15012	DAMPER, PLATE	2					
34	90269–07077	RIVET	4					
35	5SL–84753–00	DAMPER	2					
36	90480–01558	GROMMET	2					
37	1RC–2413B–00	EMBLEM	2					
38	B87–24161–00	EMBLEM 1	1					FOR MS1
39	4C8–21568–10	LABEL, WARNING	1					
40	2PP–2414J–00	DAMPER, PLATE 2	1					

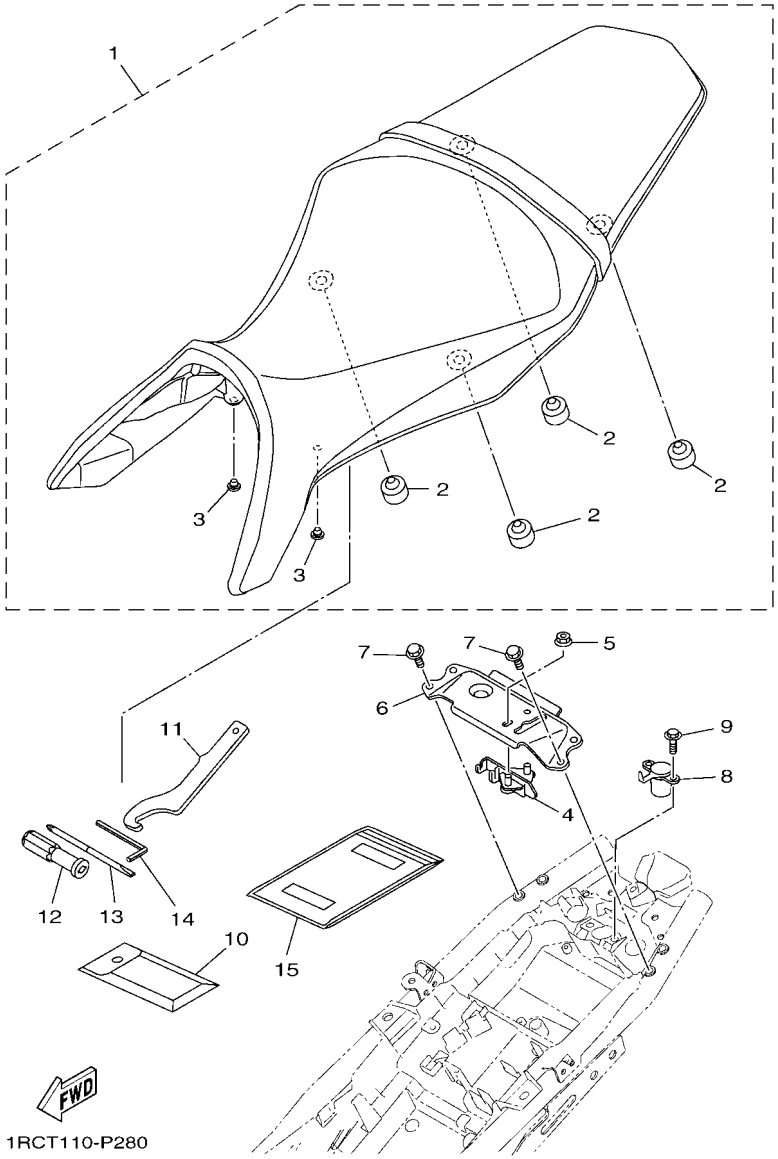

FIG. 28 SEAT

REF. NO.	PART NO.	DESCRIPTION	B892					REMARKS
1	1RC–24730–00	DOUBLE SEAT ASSY	1					
2	4GL–27114–00	.STOPPER, MAIN STAND	4					
3	90338–07157	.PLUG	2					
4	4BP–24780–00	SEAT LOCK ASSY	1					
5	95702–06500	NUT, FLANGE	2					
6	1RC–2478X–00	BRACKET, SEAT LOCK	1					
7	95022–06016	BOLT, FLANGE	4					
8	1RC–W2470–00	ROTOR SET	1					
9	95022–06014	BOLT, FLANGE	2					
10	1RC–28100–00	TOOL KIT	1					
11	1RC–28135–00	SPANNER, SPECIAL	1					
12	2H7–28151–00	GRIP, DRIVER	1					
13	2GV–28152–00	DRIVER	1					
14	23P–28164–00	WRENCH, HEXAGON 8	1					
15	4KG–28186–10	POUCH	1					

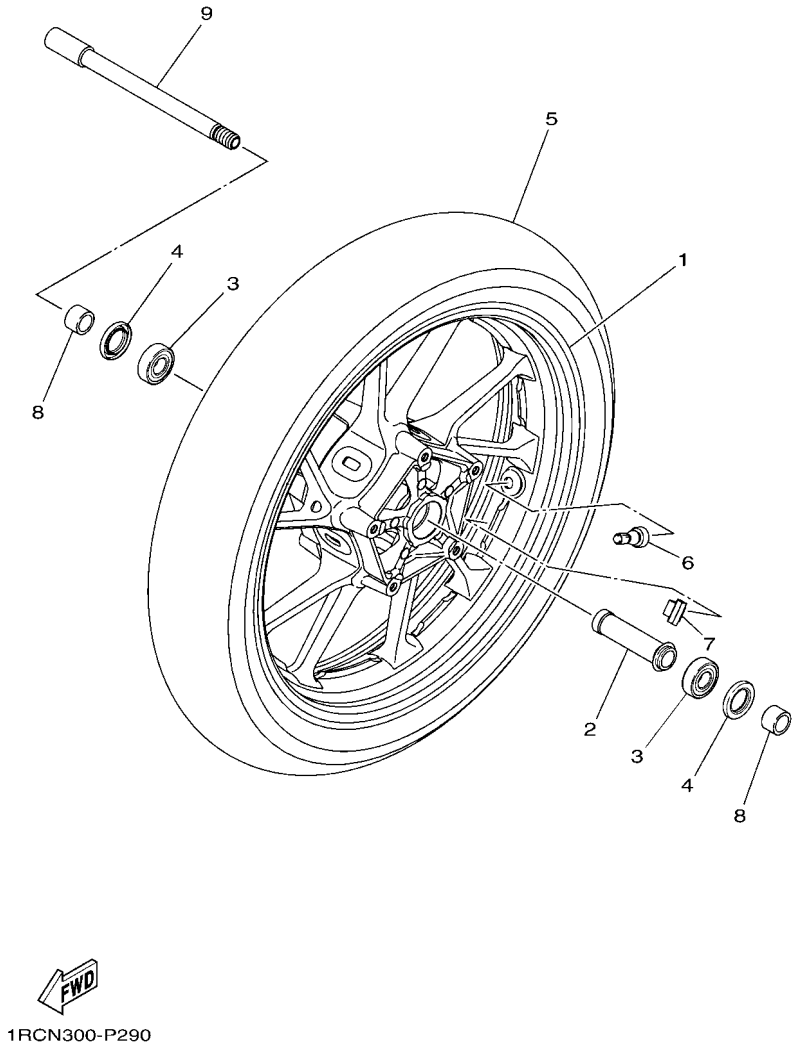

FIG. 29 FRONT WHEEL

REF. NO.	PART NO.	DESCRIPTION	B892					REMARKS
1	1RC–25168–00–P0	CAST WHEEL, FRONT	1					DPBM15 FOR MS1
	1RC–25168–00–P2	CAST WHEEL, FRONT	1					LLGS6 FOR BNS4
2	2PP–25117–00	SPACER, BEARING	1					
3	93306–20352	BEARING	2					
4	93102–25017	OIL SEAL	2					
5	94112–17126	TIRE (120/70ZR17M/C 58W D214F)	1					UR DUNLOP
	94112–17127	TIRE (120/70ZR17M/C 58W S20F)	1					UR BRIDGESTONE
6	93900–00030	VALVE, RIM (TR412)	1					TAIHEIYO
7	5MT–25398–00	BALANCER, WHEEL (10G)	1					UR
	5MT–25398–10	BALANCER, WHEEL (20G)	1					UR
	5MT–25398–20	BALANCER, WHEEL (30G)	1					UR
8	90387–17017	COLLAR	2					
9	1RC–25181–00	AXLE, WHEEL	1					

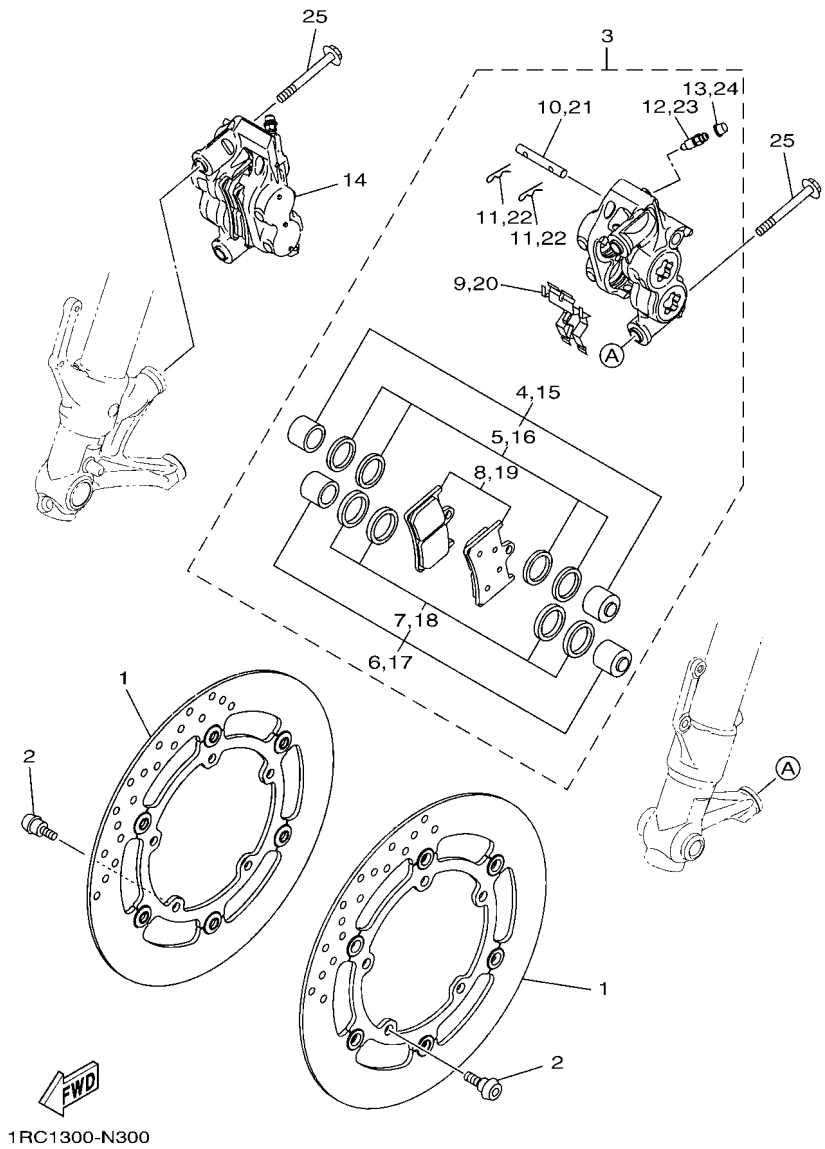

FIG. 30 FRONT BRAKE CALIPER

REF. NO.	PART NO.	DESCRIPTION	B892					REMARKS
1	1RC–2581T–00	DISK BRAKE ASSY	2					
2	90109–064G6	BOLT	10					
3	1RC–2580T–00	CALIPER ASSY (LEFT)	1					
4	4SV–25802–10	.PISTON ASSY, CALIPER	1					
5	3GM–25803–10	..CALIPER SEAL KIT	1					
6	4SV–25802–00	.PISTON ASSY, CALIPER	1					
7	3MA–25803–10	..CALIPER SEAL KIT	1					
8	5SL–25805–00	.BRAKE PAD KIT	1					
9	13S–25919–00	.SUPPORT, PAD	1					
10	4SV–25924–00	.PIN, PAD	1					
11	3GM–25925–00	.CLIP	2					
12	1J3–25824–00	.SCREW, BLEED	1					
13	306–25825–01	.CAP	1					
14	1RC–2580U–00	CALIPER ASSY (RIGHT)	1					
15	4SV–25802–10	.PISTON ASSY, CALIPER	1					
16	3GM–25803–10	..CALIPER SEAL KIT	1					
17	4SV–25802–00	.PISTON ASSY, CALIPER	1					
18	3MA–25803–10	..CALIPER SEAL KIT	1					
19	5SL–25805–00	.BRAKE PAD KIT	1					
20	13S–25919–00	.SUPPORT, PAD	1					
21	4SV–25924–00	.PIN, PAD	1					
22	3GM–25925–00	.CLIP	2					
23	1J3–25824–00	.SCREW, BLEED	1					
24	306–25825–01	.CAP	1					
25	90105–10440	BOLT, FLANGE	4					

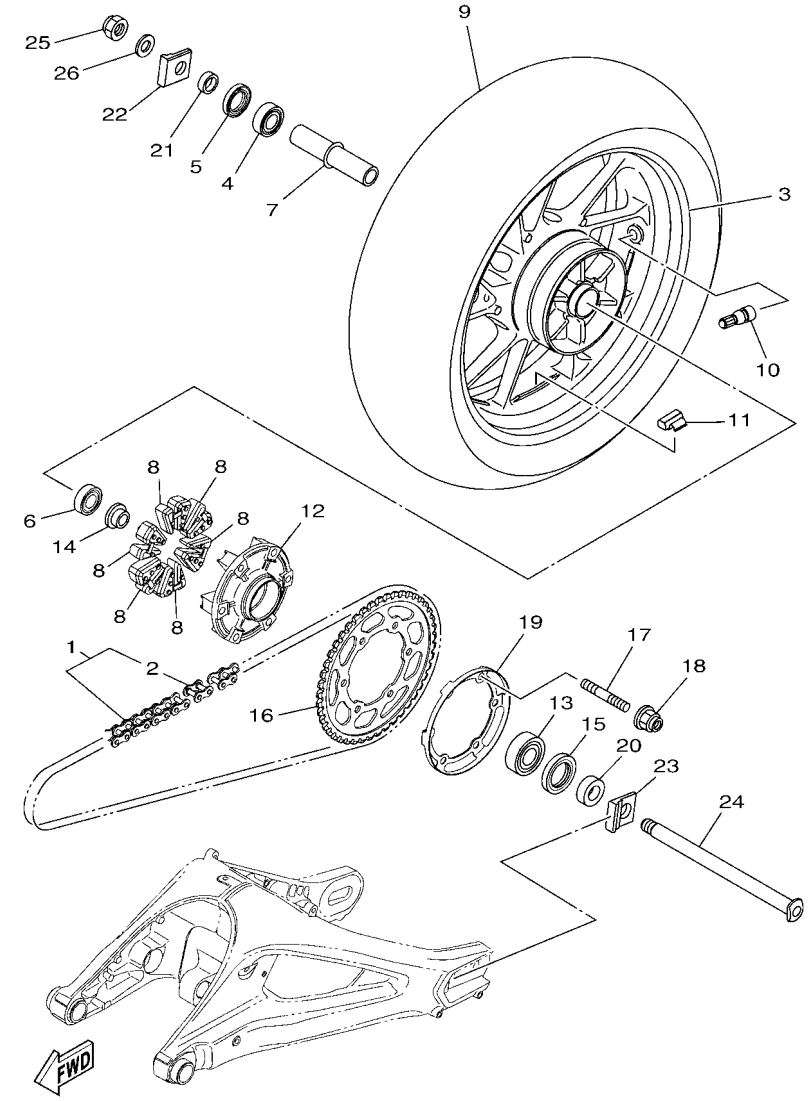

FIG. 31 REAR WHEEL

REF. NO.	PART NO.	DESCRIPTION	B892					REMARKS
1	94582–31110	CHAIN (DID 525V10-110LL)	1					
2	94682–31031	.JOINT, CHAIN (DID 525V10-ZJ)	1					
3	1RC–25338–00–P0	CAST WHEEL, REAR	1					DPBM15 FOR MS1
	1RC–25338–00–P2	CAST WHEEL, REAR	1					LLGS6 FOR BNS4
4	93306–20480	BEARING	1					
5	93102–28022	OIL SEAL	1					
6	93306–00416	BEARING	1					
7	2PP–25317–00	SPACER, BEARING	1					
8	1RC–25364–00	DAMPER	6					
9	94118–17077	TIRE (180/55ZR17M/C 73W D214)	1					UR DUNLOP
	94118–17078	TIRE (180/55ZR17M/C 73W S20R)	1					UR BRIDGESTONE
10	93900–00030	VALVE, RIM (TR412)	1					TAIHEIYO
11	5MT–25398–00	BALANCER, WHEEL (10G)	1					UR
	5MT–25398–10	BALANCER, WHEEL (20G)	1					UR
	5MT–25398–20	BALANCER, WHEEL (30G)	1					UR
12	5JJ–25366–00	CLUTCH, HUB	1					
13	93306–205B5	BEARING	1					
14	1RC–25383–00	COLLAR, WHEEL	1					
15	93106–40013	OIL SEAL	1					
16	1RC–25445–00	SPROCKET, DRIVEN (45T)	1					
17	90116–10048	BOLT, STUD	6					
18	95602–10200	NUT, U FLANGE	6					
19	1RC–2537W–00	BRACKET 1	1					
20	90387–20036	COLLAR	1					
21	90387–20035	COLLAR	1					
22	3SP–25388–00	PULLER, CHAIN 1	1					
23	1RC–25389–00	PULLER, CHAIN 2	1					

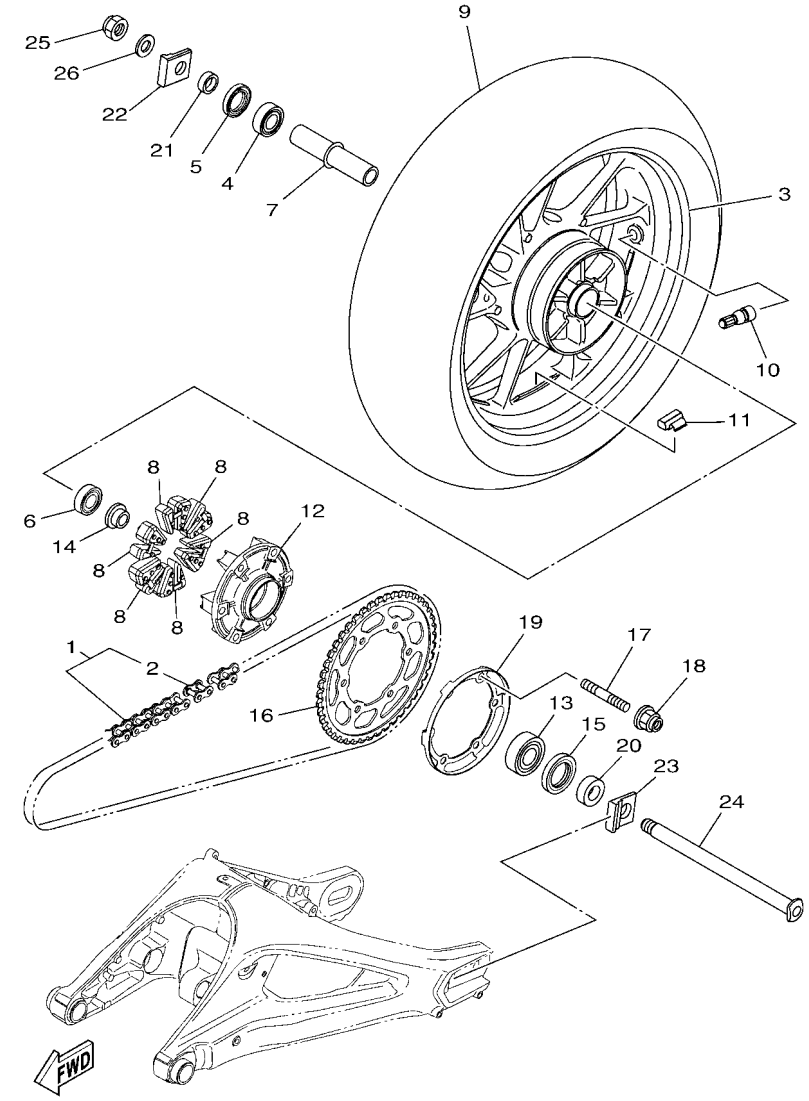

FIG. 31 REAR WHEEL

REF. NO.	PART NO.	DESCRIPTION	B892					REMARKS
24	1RC–25381–00	AXLE, WHEEL	1					
25	90185–18009	NUT, SELF-LOCKING	1					
26	90201–18021	WASHER, PLATE	1					

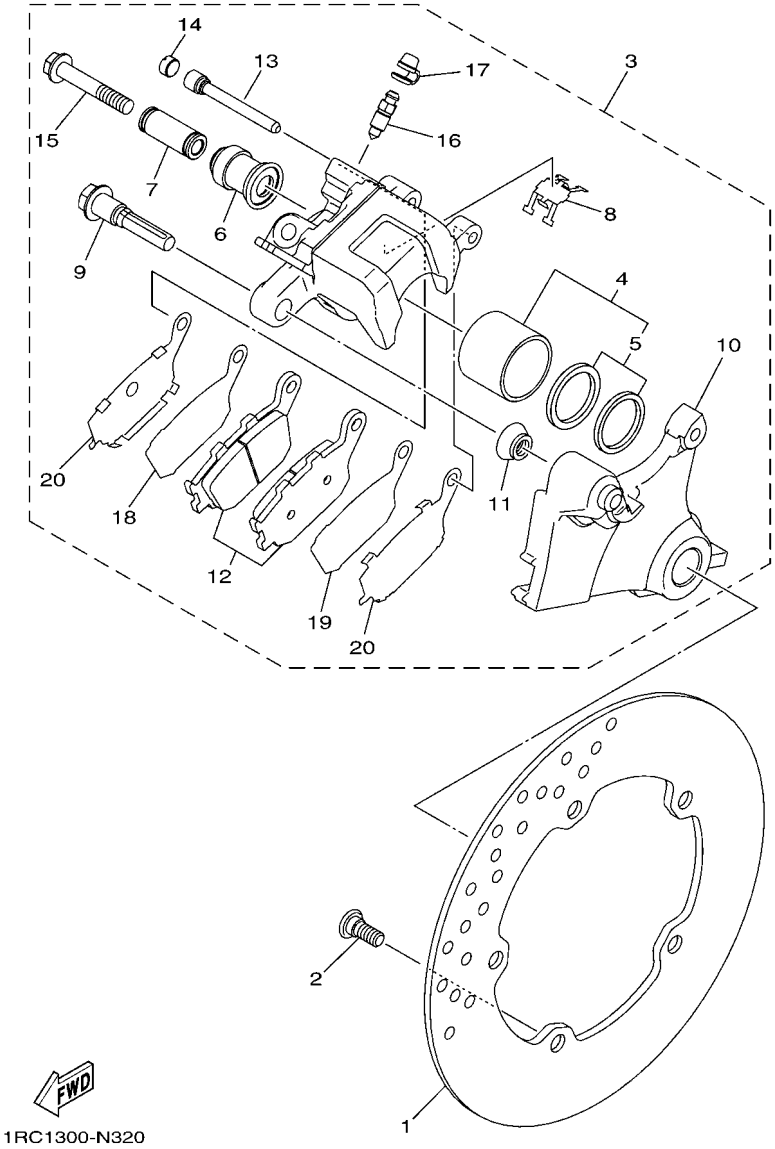

FIG. 32 REAR BRAKE CALIPER

REF. NO.	PART NO.	DESCRIPTION	B892					REMARKS
1	1RC–2582W–00	DISK, REAR BRAKE 2	1					
2	90109–08045	BOLT	5					
3	1RC–2580W–00	CALIPER ASSY, REAR 2	1					
4	5SL–25802–00	.PISTON ASSY, CALIPER	1					
5	5SL–25803–00	..CALIPER SEAL KIT	1					
6	5SL–25917–00	.BOOT, CALIPER	1					
7	5SL–25838–00	.SLEEVE, CALIPER	1					
8	5SL–25919–00	.SUPPORT, PAD	1					
9	5SL–25914–00	.PIN, SLIDE	1					
10	1RC–25921–50	.BRACKET, SUPPORT	1					
11	3JD–25917–00	.BOOT, CALIPER	1					
12	5VX–25806–00	.BRAKE PAD KIT 2	1					
13	8CR–25924–00	.PIN, PAD	1					
14	5DH–25916–00	.PLUG	1					
15	1RC–25926–00	.BOLT	1					
16	1UY–25824–51	.SCREW, BLEED	1					
17	1UY–25825–51	.CAP	1					
18	5SL–25827–00	.SHIM, CALIPER	1					
19	5SL–25827–10	.SHIM, CALIPER	1					
20	5SL–25828–01	.SHIM, CALIPER	2					

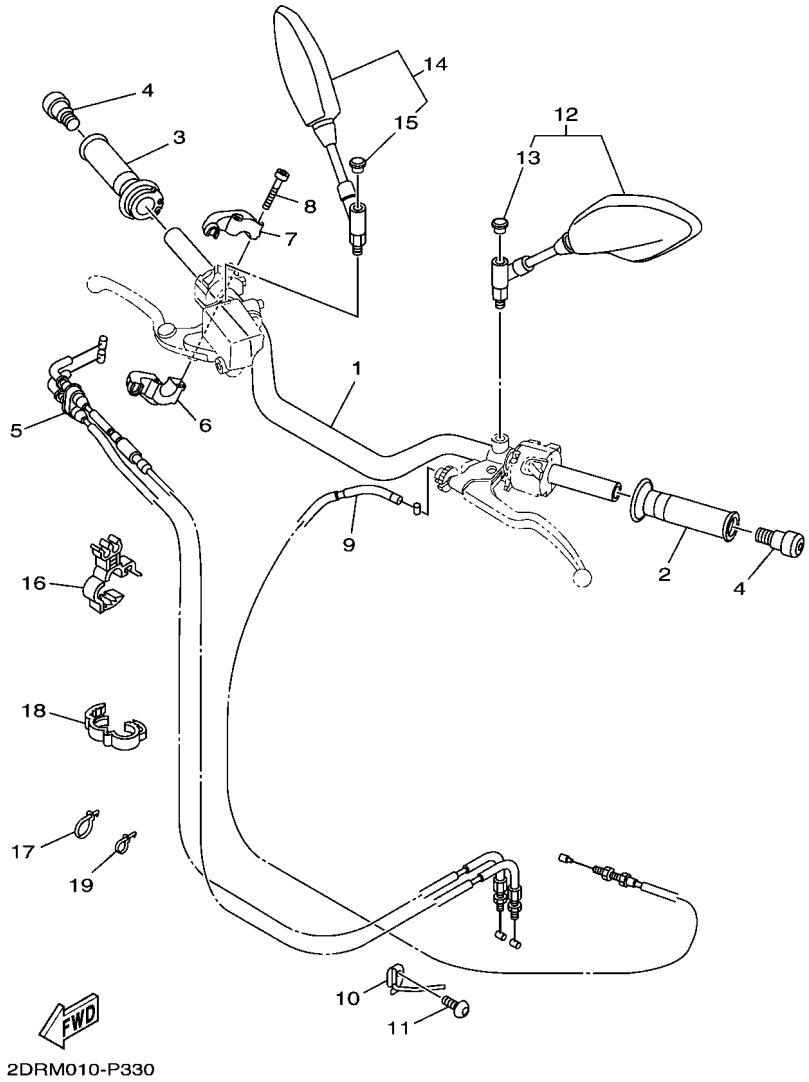

FIG. 33 STEERING HANDLE & CABLE

REF. NO.	PART NO.	DESCRIPTION	B892					REMARKS
1	1RC–26111–00	HANDLEBAR	1					
2	4YR–26241–02	GRIP (LEFT)	1					
3	4YR–26240–02	GRIP ASSY	1					
4	5GJ–26246–00	END, GRIP	2					
5	1RC–26302–00	THROTTLE CABLE ASSY	1					
6	4KG–26281–00	CAP GRIP	1					
7	3XW–26282–01	CAP GRIP	1					
8	91317–05035	BOLT,HEX.SOCKET HEAD	2					
9	1RC–26335–00	CABLE, CLUTCH	1					
10	1RC–23857–00	HOLDER	1					
11	92017–06010	BOLT, BUTTON HEAD	1					
12	1RC–26280–00	REAR VIEW MIRROR ASSY (LEFT)	1					
13	23P–26133–00	.CAP	1					
14	1RC–26290–00	REAR VIEW MIRROR ASSY (RIGHT)	1					
15	23P–26133–00	.CAP	1					
16	90464–16023	CLAMP	1					
17	90464–14009	CLAMP	1					
18	90464–16001	CLAMP	1					
19	90464–05003	CLAMP	1					

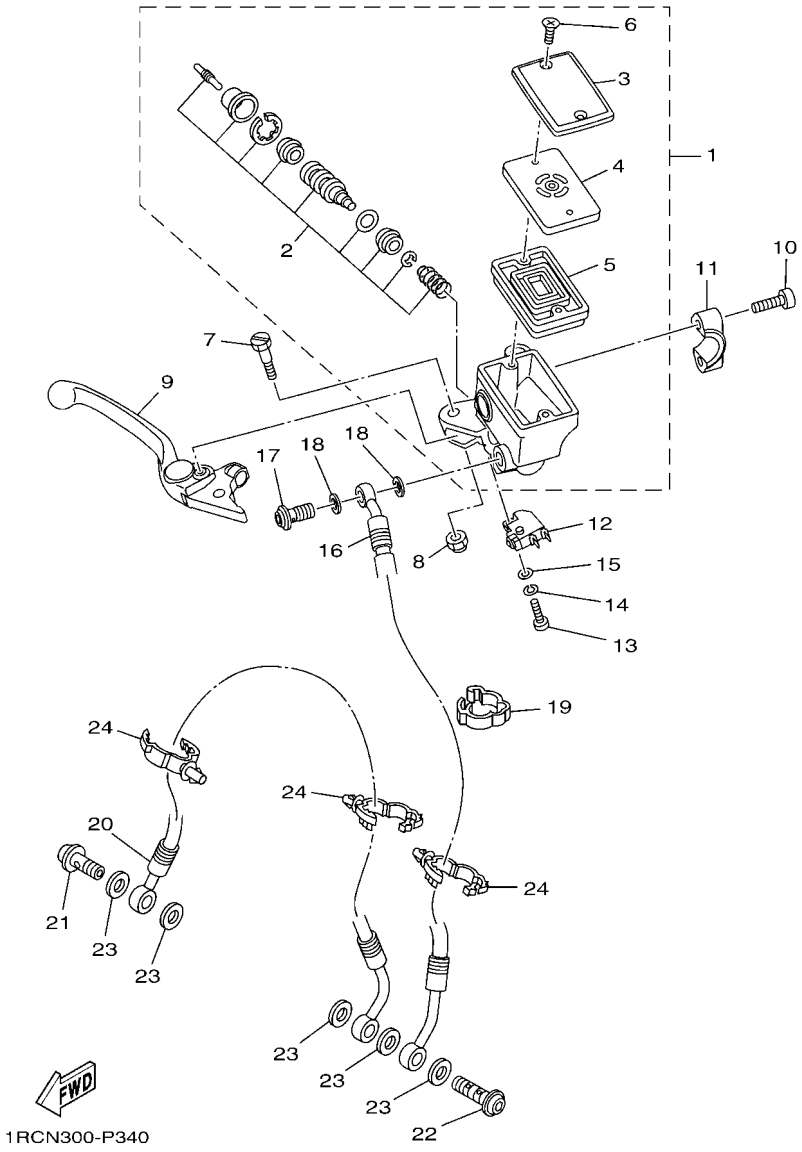

FIG. 34 FRONT MASTER CYLINDER

REF. NO.	PART NO.	DESCRIPTION	B892					REMARKS
1	1RC–2580A–00	MASTER CYLINDER SUB ASSY 2	1					
2	1MC–25807–00	.CYLINDER KIT, MASTER	1					
3	5VS–25852–00	.CAP, RESERVOIR	1					
4	5VS–25855–00	.BUSH,DIAPHRAGM	1					
5	20S–25854–00	.DIAPHRAGM, RESERVOIR	1					
6	5VS–2589H–00	.SCREW	2					
7	5VS–2589F–00	BOLT, LEVER	1					
8	95617–06100	NUT, U	1					
9	5VS–83922–00	LEVER 2	1					
10	5VS–26332–00	BOLT	2					
11	5VS–25867–00	BRACKET, MASTER CYLINDER	1					
12	1HP–83980–01	FRONT STOP SWITCH ASSY	1					
13	98502–04012	SCREW, PAN HEAD	1					
14	92902–04100	WASHER, SPRING	1					
15	92902–04600	WASHER, PLATE	1					
16	1RC–25873–00	HOSE, BRAKE 2	1					
17	90401–10172	BOLT, UNION	1					
18	90430–10005	GASKET	2					
19	90464–14003	CLAMP	1					
20	1RC–25872–00	HOSE, BRAKE 1	1					
21	90401–10172	BOLT, UNION	1					
22	90401–10042	BOLT, UNION	1					
23	90430–10005	GASKET	5					
24	90464–18002	CLAMP	3					

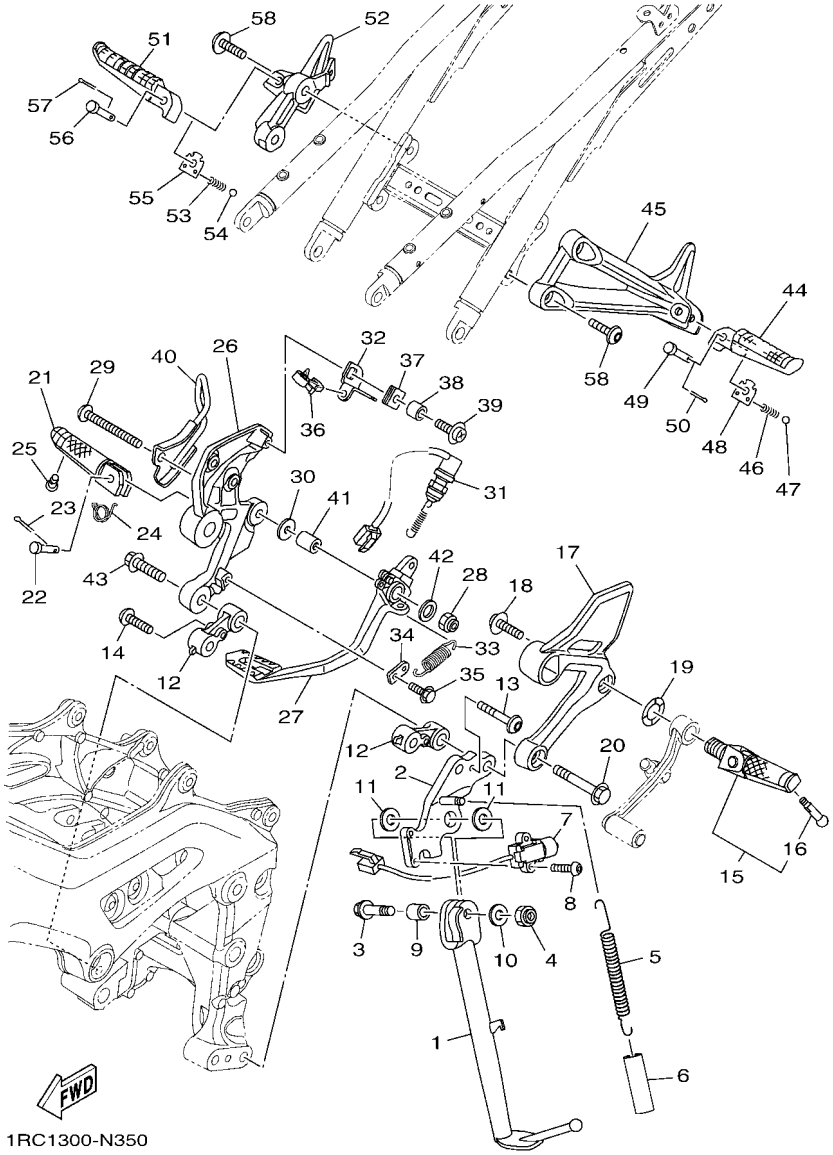

FIG. 35 STAND & FOOTREST

REF. NO.	PART NO.	DESCRIPTION	B892					REMARKS
1	1RC–27311–00	STAND, SIDE	1					
2	1RC–27321–00	BRACKET, SIDE STAND	1					
3	90105–10188	BOLT, FLANGE	1					
4	95612–10100	NUT, U	1					
5	90506–20032	SPRING, TENSION	1					
6	90445–197J2	HOSE (L60)	1					
7	1RC–82566–50	SWITCH, SIDE STAND	1					
8	90111–05036	BOLT,HEX. SOCKET BUTTON	2					
9	90387–10050	COLLAR	1					
10	90201–10035	WASHER, PLATE	1					
11	90201–17018	WASHER, PLATE	2					
12	1RC–274A3–00	BRACKET, ADAPTER 1	2					
13	92012–06040	BOLT, BUTTON HEAD	1					
14	92012–06030	BOLT, BUTTON HEAD	1					
15	1RC–27410–00	FRONT FOOTREST ASSY (LEFT)	1					
16	90109–08231	.BOLT	1					
17	1RC–27442–00	BRACKET 2	1					
18	90111–10039	BOLT,HEX. SOCKET BUTTON	1					
19	90206–17084	WASHER, WAVE	1					
20	90105–10435	BOLT, FLANGE	1					
21	3XV–27461–02	FOOTREST	1					
22	91701–08040	PIN	1					
23	91402–25015	PIN, COTTER	1					
24	90508–20572	SPRING, TORSION	1					
25	90109–08231	BOLT	1					
26	1RC–27443–00	BRACKET 3	1					
27	1RC–27200–00	PEDAL, BRAKE	1					

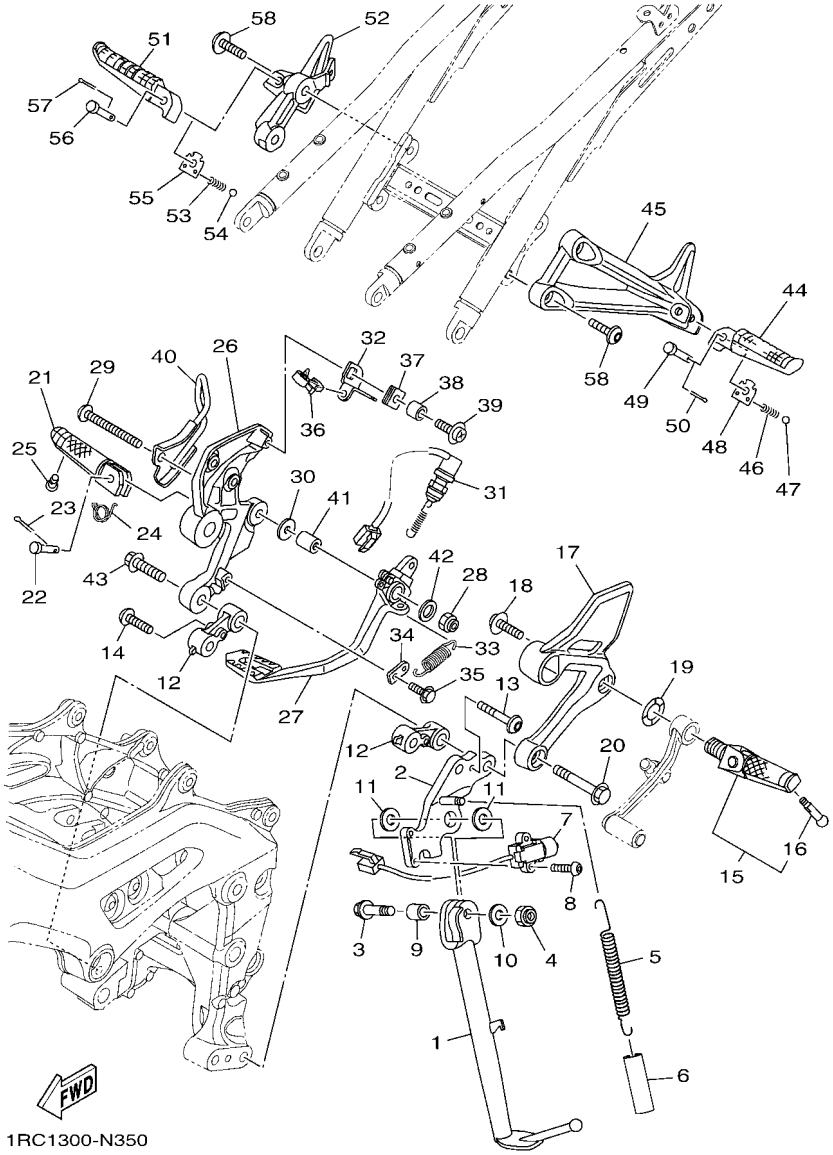

FIG. 35 STAND & FOOTREST

REF. NO.	PART NO.	DESCRIPTION	B892					REMARKS
28	90185–08089	NUT, SELF-LOCKING	1					
29	90111–08028	BOLT,HEX. SOCKET BUTTON	1					
30	90201–08103	WASHER, PLATE	1					
31	1RC–82530–00	STOP SWITCH ASSY	1					
32	1RC–2144G–00	STAY, STOP SWITCH	1					
33	90506–23008	SPRING, TENSION	1					
34	1RC–27432–00	BRACKET 1	1					
35	95802–06010	BOLT, FLANGE	1					
36	90464–15157	CLAMP	1					
37	90480–12607	GROMMET	1					
38	90387–06M16	COLLAR	1					
39	90159–06150	SCREW, WITH WASHER	1					
40	1RC–27267–00	GUIDE, WIRE	1					
41	90387–08102	COLLAR	1					
42	90201–08048	WASHER, PLATE	1					
43	90105–10246	BOLT, FLANGE	1					
44	3VR–27431–02	FOOTREST, REAR 1	1					
45	1RC–2741L–01	BRACKET 4	1					
46	90501–12743	SPRING, COMPRESSION	1					
47	93501–04011	BALL	1					
48	5VX–27437–00	WASHER, SPECIAL	1					
49	91702–08040	PIN, CLEVIS	1					
50	91401–25015	PIN, COTTER	1					
51	3VR–27441–02	FOOTREST, REAR 2	1					
52	1RC–2742L–01	BRACKET 5	1					
53	90501–12743	SPRING, COMPRESSION	1					
54	93501–04011	BALL	1					

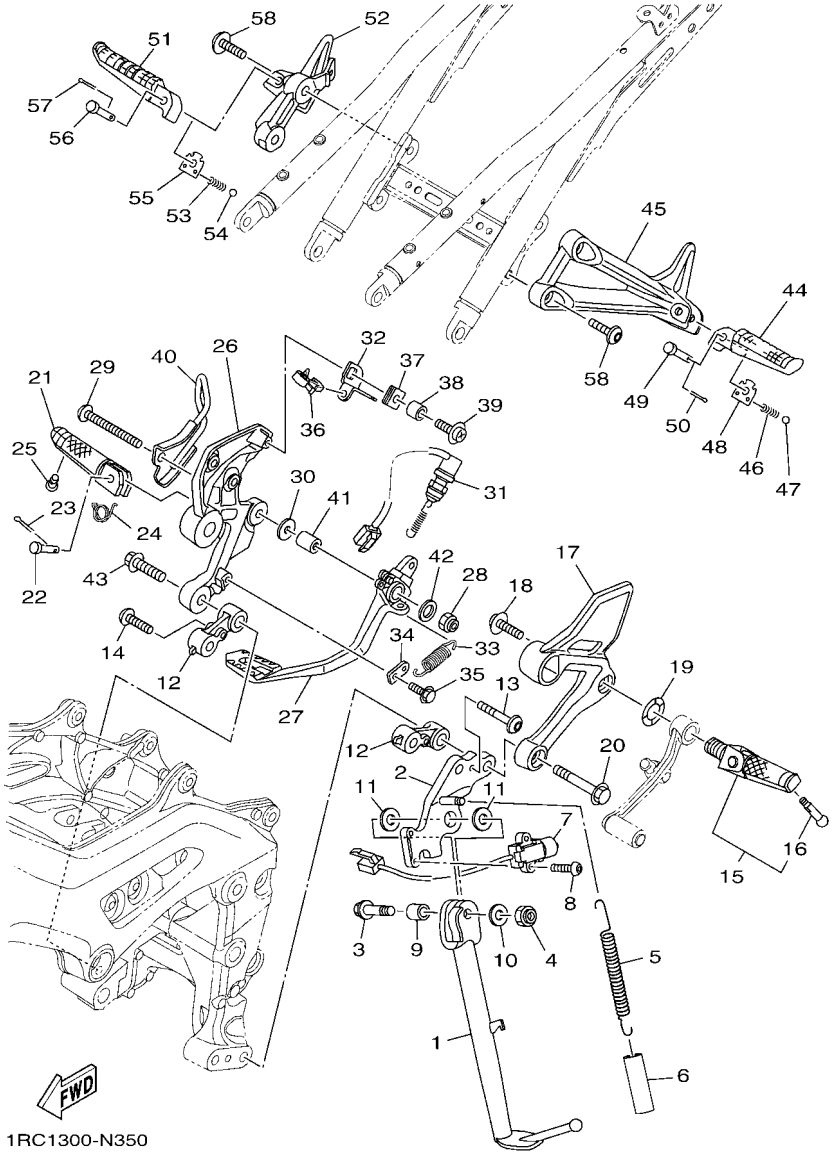

FIG. 35 STAND & FOOTREST

REF. NO.	PART NO.	DESCRIPTION	B892					REMARKS
55	5VX–27437–00	WASHER, SPECIAL	1					
56	91702–08040	PIN, CLEVIS	1					
57	91401–25015	PIN, COTTER	1					
58	90149–08230	SCREW	4					

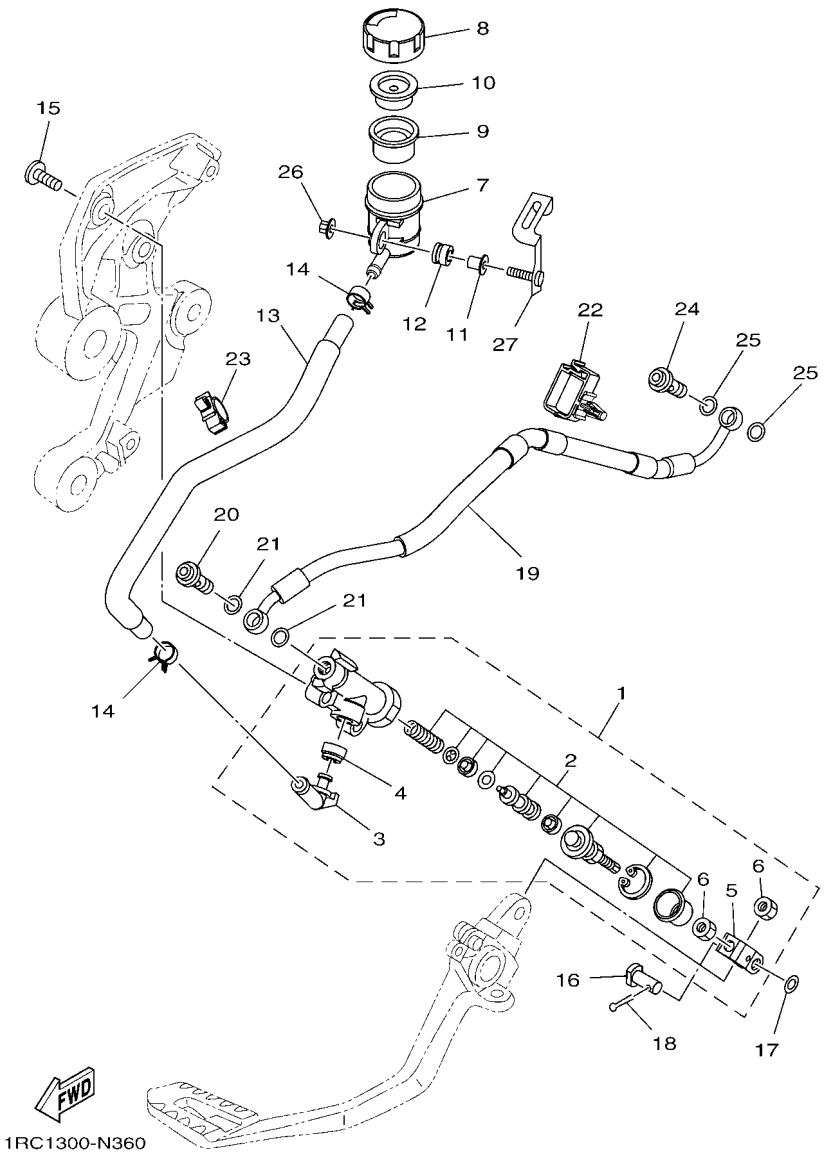

FIG. 36 REAR MASTER CYLINDER

REF. NO.	PART NO.	DESCRIPTION	B892					REMARKS
1	1RC–2583V–00	RR. MASTER CYLINDER ASSY.	1					
2	56P–25808–50	.CYLINDER KIT, MASTER	1					
3	2D1–2582A–00	.JOINT	1					
4	4BP–2585F–01	.O-RING	1					
5	4BP–27222–02	.JOINT	1					
6	90170–08010	.NUT	2					
7	14B–25894–00	TANK, RESERVOIR	1					
8	2C0–25852–00	CAP, RESERVOIR	1					
9	2VN–25854–00	DIAPHRAGM, RESERVOIR	1					
10	2VN–25855–00	BUSH,DIAPHRAGM	1					
11	90387–05028	COLLAR	1					
12	2C0–26326–00	GROMMET	1					
13	1RC–25895–00	HOSE, RESERVOIR	1					
14	90467–120A3	CLIP	2					
15	90111–08038	BOLT,HEX. SOCKET BUTTON	2					
16	90240–08005	PIN, CLEVIS	1					
17	90201–08066	WASHER, PLATE	1					
18	91401–20012	PIN, COTTER	1					
19	1RC–25874–00	HOSE, BRAKE	1					
20	90401–10172	BOLT, UNION	1					
21	90430–10005	GASKET	2					
22	90464–20023	CLAMP	1					
23	90464–18007	CLAMP	1					
24	90401–10172	BOLT, UNION	1					
25	90430–10005	GASKET	2					
26	95707–05500	NUT, FLANGE	1					
27	1RC–2582E–00	HOLDER, RESERVE TANK	1					

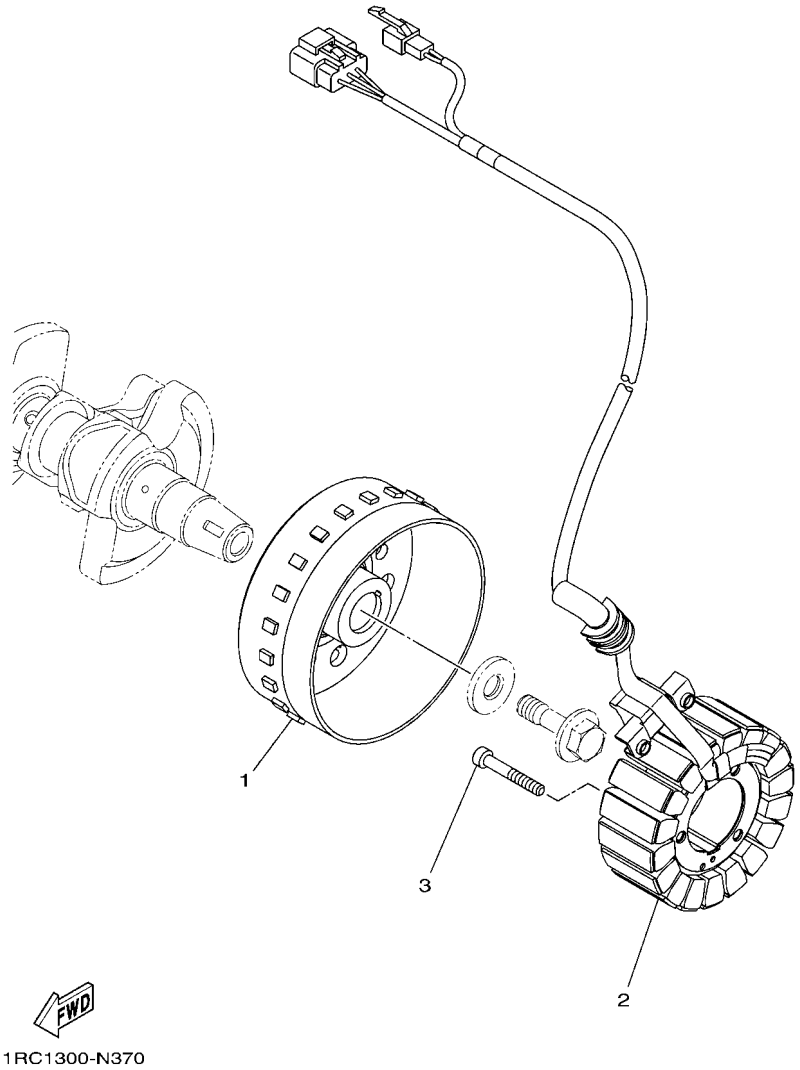

FIG. 37 GENERATOR

REF. NO.	PART NO.	DESCRIPTION	B892					REMARKS
1	1RC–81450–00	ROTOR ASSY	1					
2	1RC–81410–00	STATOR ASSY	1					
3	90110–06223	BOLT, HEXAGON SOCKET HEAD	3					

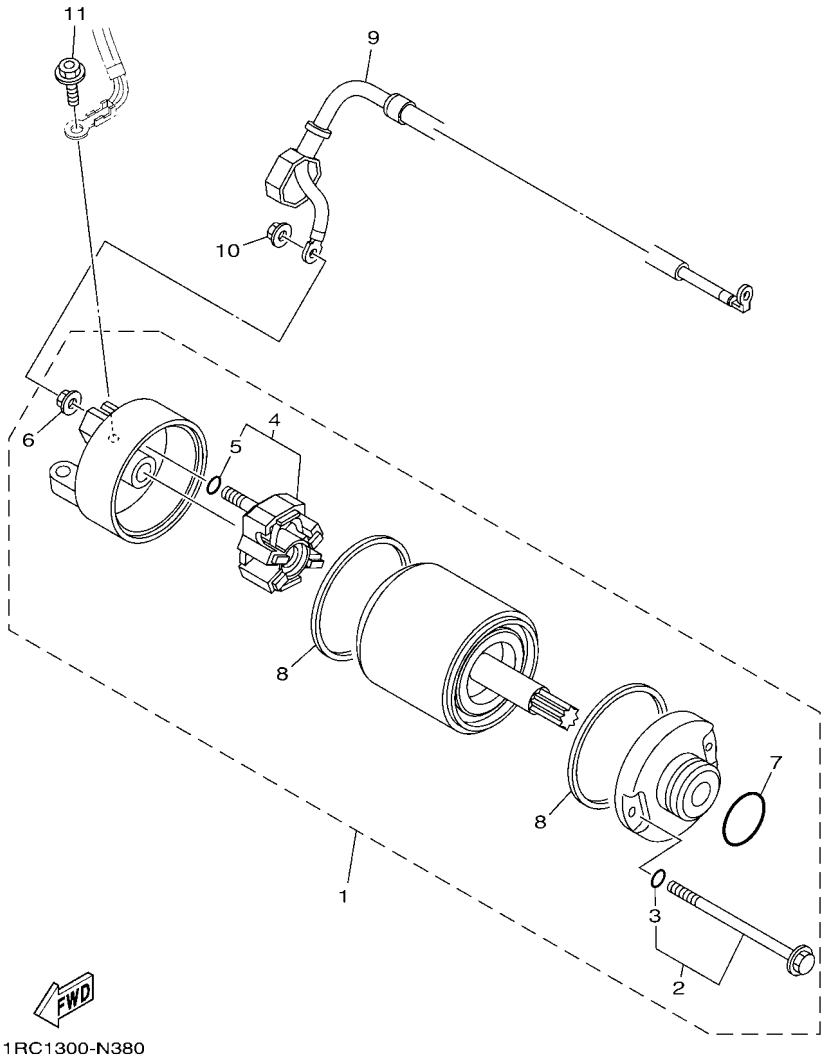

FIG. 38 STARTING MOTOR

REF. NO.	PART NO.	DESCRIPTION	B892					REMARKS
1	1RC–81890–00	MOTOR ASSY	1					
2	28P–81826–00	.BOLT	2					
3	3TB–81847–00	..O-RING	1					
4	4B5–81840–00	.BRUSH HOLDER ASSY	1					
5	3TB–81847–00	..O-RING	1					
6	4XV–8182A–00	.NUT	1					
7	1FK–81847–00	.O-RING	1					
8	11H–81844–00	.GASKET	2					
9	1RC–81815–00	CORD, STARTER MOTOR	1					
10	4XV–8182A–00	NUT	1					
11	90110–06388	BOLT, HEXAGON SOCKET HEAD	2					

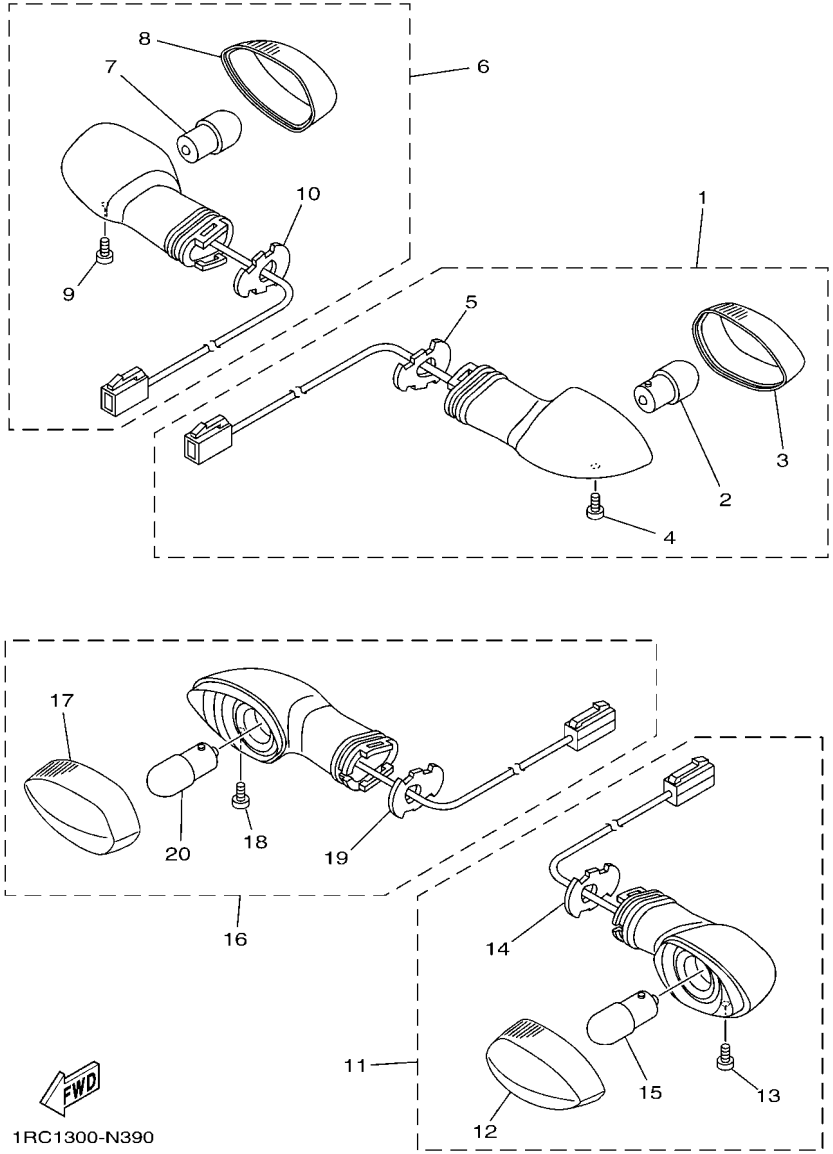

FIG. 39 FLASHER LIGHT

REF. NO.	PART NO.	DESCRIPTION	B892					REMARKS
1	1RC–83330–00	REAR FLASHER LIGHT ASSY 1	1					
2	1KB–83311–00	.BULB, FLASHER (12V-10W)	1					
3	1KB–H333A–00	.LENS COMP 1	1					
4	3D9–H3333–10	.SCREW, LENS FITTING	1					
5	3D7–83318–10	.STAY, FLASHER 1	1					
6	1RC–83340–00	REAR FLASHER LIGHT ASSY 2	1					
7	1KB–83311–00	.BULB, FLASHER (12V-10W)	1					
8	1KB–H334A–00	.LENS COMP 2	1					
9	3D9–H3333–10	.SCREW, LENS FITTING	1					
10	3D7–83318–10	.STAY, FLASHER 1	1					
11	1KB–83310–00	FRONT FLASHER LIGHT ASSY 1	1					
12	1KB–8333A–00	.LENS COMP 1	1					
13	3D9–H3333–10	.SCREW, LENS FITTING	1					
14	3D7–83318–10	.STAY, FLASHER 1	1					
15	1KB–83311–00	.BULB, FLASHER (12V-10W)	1					
16	1KB–83320–00	FRONT FLASHER LIGHT ASSY 2	1					
17	1KB–8334A–00	.LENS COMP 2	1					
18	3D9–H3333–10	.SCREW, LENS FITTING	1					
19	3D7–83318–10	.STAY, FLASHER 1	1					
20	1KB–83311–00	.BULB, FLASHER (12V-10W)	1					

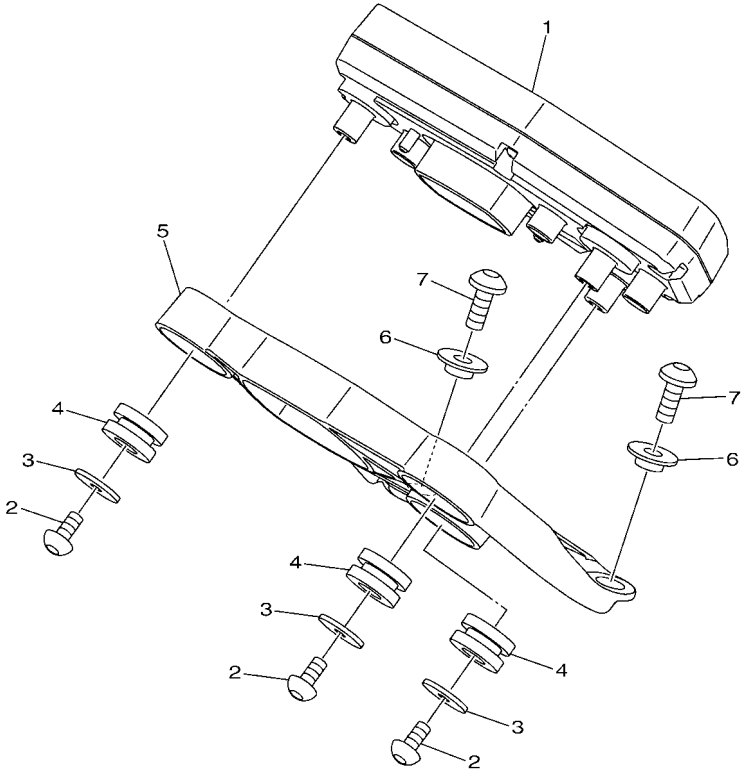

1RC1300-N400

FIG. 40 METER

REF. NO.	PART NO.	DESCRIPTION	B892					REMARKS
1	1RC–83500–00	METER ASSY (KM/H)	1					UR
	1RC–83500–10	METER ASSY (MPH)	1					UR
2	90167–05080	SCREW, TAPPING	3					
3	90201–05036	WASHER, PLATE	3					
4	4XV–83513–00	DAMPER	3					
5	1RC–83559–00	COVER, METER	1					
6	90387–07717	COLLAR	2					
7	90111–06038	BOLT,HEX. SOCKET BUTTON	2					

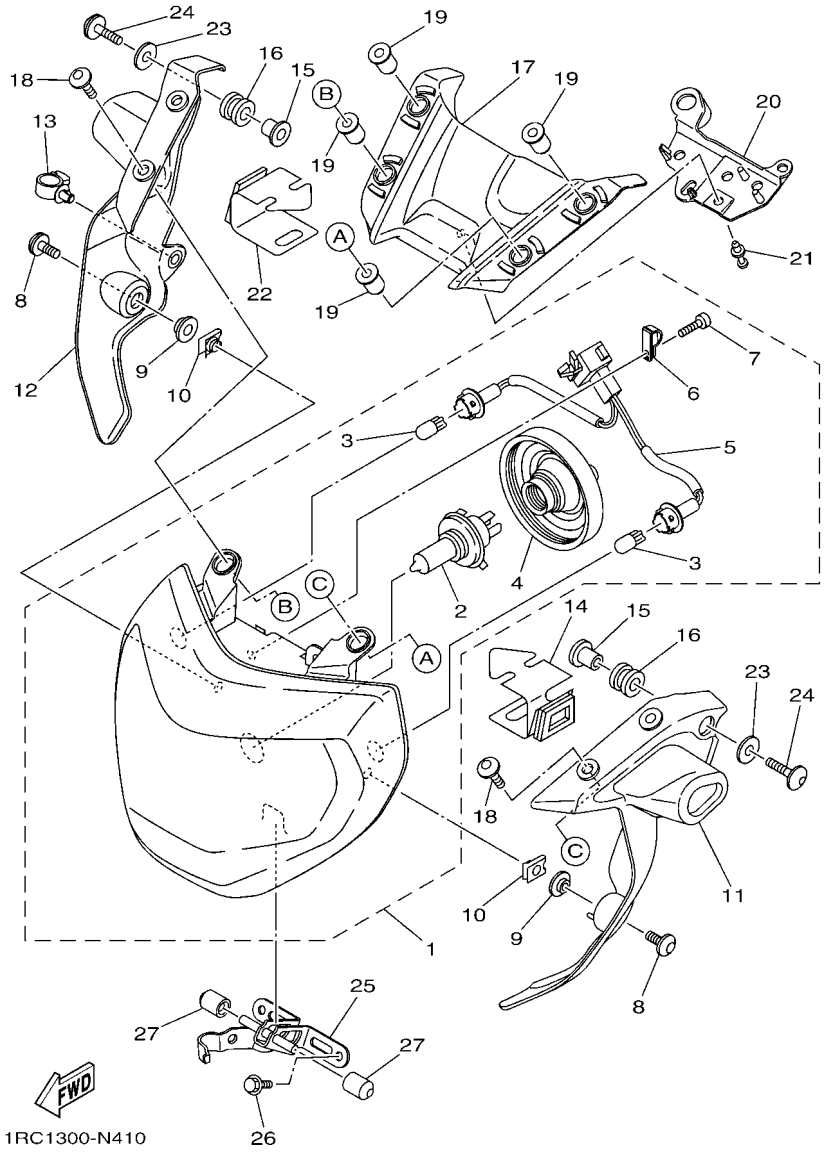

FIG. 41 HEADLIGHT

REF. NO.	PART NO.	DESCRIPTION	B892					REMARKS
1	1RC–84300–00	HEADLIGHT ASSY	1					
2	1RC–84314–00	.BULB, HEADLIGHT (12V-60/55W)	1					
3	1RC–84347–00	.BULB (12V-5W)	2					
4	1RC–84397–00	.COVER, SOCKET	1					
5	1RC–84359–00	.CORD, HEADLIGHT	1					
6	1RC–84746–00	.PLATE, SEAT BASE	1					
7	1RC–84724–00	.SCREW, LENS FITTING	1					
8	90111–06038	BOLT,HEX. SOCKET BUTTON	2					
9	90387–06170	COLLAR	2					
10	90183–060A6	NUT, SPRING	2					
11	1RC–2831V–00–P0	STAY, HEAD LIGHT 1	1					MBL2 FOR MS1,BNS4
12	1RC–2832V–00–P0	STAY, HEAD LIGHT 2	1					MBL2 FOR MS1,BNS4
13	90464–18002	CLAMP	1					
14	1RC–84152–00	GROMMET	1					
15	90387–07391	COLLAR	2					
16	90480–14604	GROMMET	2					
17	1RC–84369–00	COVER 1	1					
18	90111–06123	BOLT,HEX. SOCKET BUTTON	4					
19	90179–06072	NUT	4					
20	1RC–8431U–00	HOLDER	1					
21	90269–05005	RIVET	1					
22	1RC–84154–00	GROMMET	1					
23	90201–06063	WASHER, PLATE	2					
24	90111–06150	BOLT,HEX. SOCKET BUTTON	2					
25	1RC–8431R–00	STAY, SETTING	1					
26	95807–06016	BOLT, FLANGE	2					
27	1RC–84527–00	DAMPER	2					

FIG. 42 TAILLIGHT

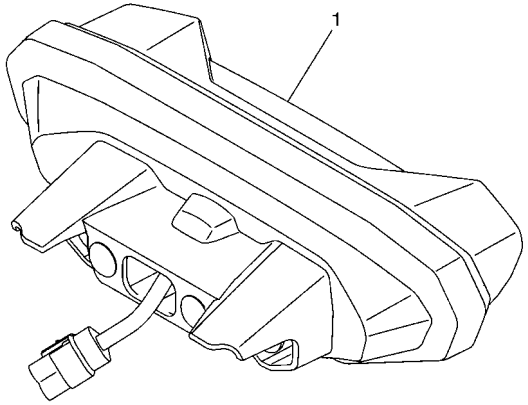

1RC1300-N420

REF. NO.	PART NO.	DESCRIPTION	B892					REMARKS
1	1RC–84700–00	TAILLIGHT ASSY	1					

FIG. 43 HANDLE SWITCH & LEVER

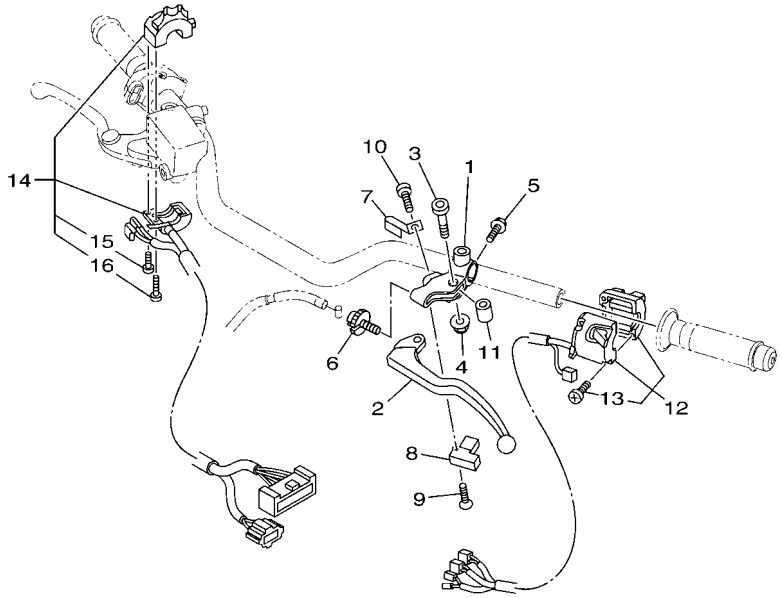

1RC9370-N430

REF. NO.	PART NO.	DESCRIPTION	B892					REMARKS
1	1B3–82911–00	HOLDER, LEVER 1	1					
2	5EB–83912–03	LEVER 1	1					
3	2C0–83945–00	BOLT, LEVER	1					
4	95607–06200	NUT, SELF U-FLANGE	1					
5	95027–06020	BOLT, FLANGE	1					
6	5LV–83951–00	BOLT, CABLE ADJUSTING	1					
7	4XV–83929–00	PLATE, SPRING	1					
8	3YX–82917–01	SWITCH	1					
9	98704–03020	SCREW, FLAT HEAD	1					
10	98507–04010	SCREW, PAN HEAD	1					
11	5JJ–83913–00	COLLAR, LEVER 1	1					
12	1RC–83972–01	SWITCH, HANDLE 4	1					
13	98507–04025	.SCREW, PAN HEAD	2					
14	1RC–83963–00	SWITCH, HANDLE 3	1					
15	98507–04020	.SCREW, PAN HEAD	1					
16	98507–04030	.SCREW, PAN HEAD	1					

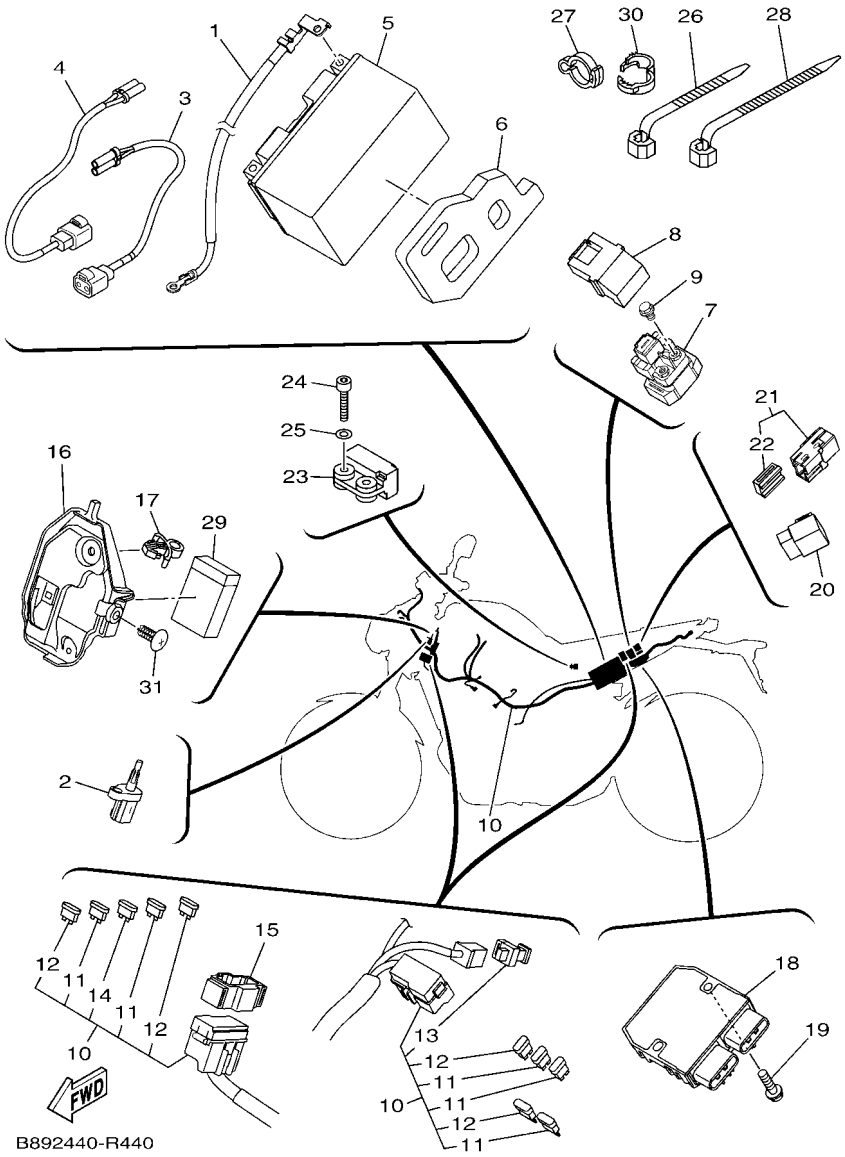

FIG. 44 ELECTRICAL 1

REF. NO.	PART NO.	DESCRIPTION	B892					REMARKS
1	1RC–82116–00	WIRE, MINUS LEAD	1					
2	5YU–85886–00	SENSOR, AIR TEMPERATURE	1					
3	1RC–82309–00	WIRE, SUB LEAD	1					
4	1RC–82509–00	WIRE, SUB LEAD	1					
5	5VY–82100–00	BATTERY ASSY (YUASA YTZ10S)	1					
6	B90–8246K–00	SPACER	1					
7	1RC–81940–00	STARTER RELAY ASSY	1					
8	5SL–82119–30	COVER, LEAD WIRE	1					
9	95022–06008	BOLT, FLANGE	2					
10	1RC–82590–01	WIRE HARNESS ASSY	1					
11	5JJ–82151–00	.FUSE (7.5A-BL)	5					
12	5JJ–82151–10	.FUSE (15A-BL)	4					
13	5JW–82151–10	.FUSE (50A)	1					
14	5JJ–82151–80	.FUSE (2A-BL)	2					
15	1RC–82544–00	CLAMP	1					
16	1RC–82599–00	COVER, CONNECTER	1					
17	90464–15157	CLAMP	1					
18	1D7–81960–01	RECTIFIER & REGULATOR ASSY	1					
19	95022–06025	BOLT, FLANGE	2					
20	5VK–81950–40	RELAY ASSY (5VK-40)	1					
21	1ST–81950–00	RELAY ASSY (1ST-00)	1					
22	5JJ–81952–00	.HOLDER, RELAY	1					
23	5PS–82576–01	SENSOR, LEAN ANGLE	1					
24	91312–04020	BOLT	2					
25	90201–04030	WASHER, PLATE	2					
26	90464–13073	CLAMP	1					
27	90464–14010	CLAMP	1					

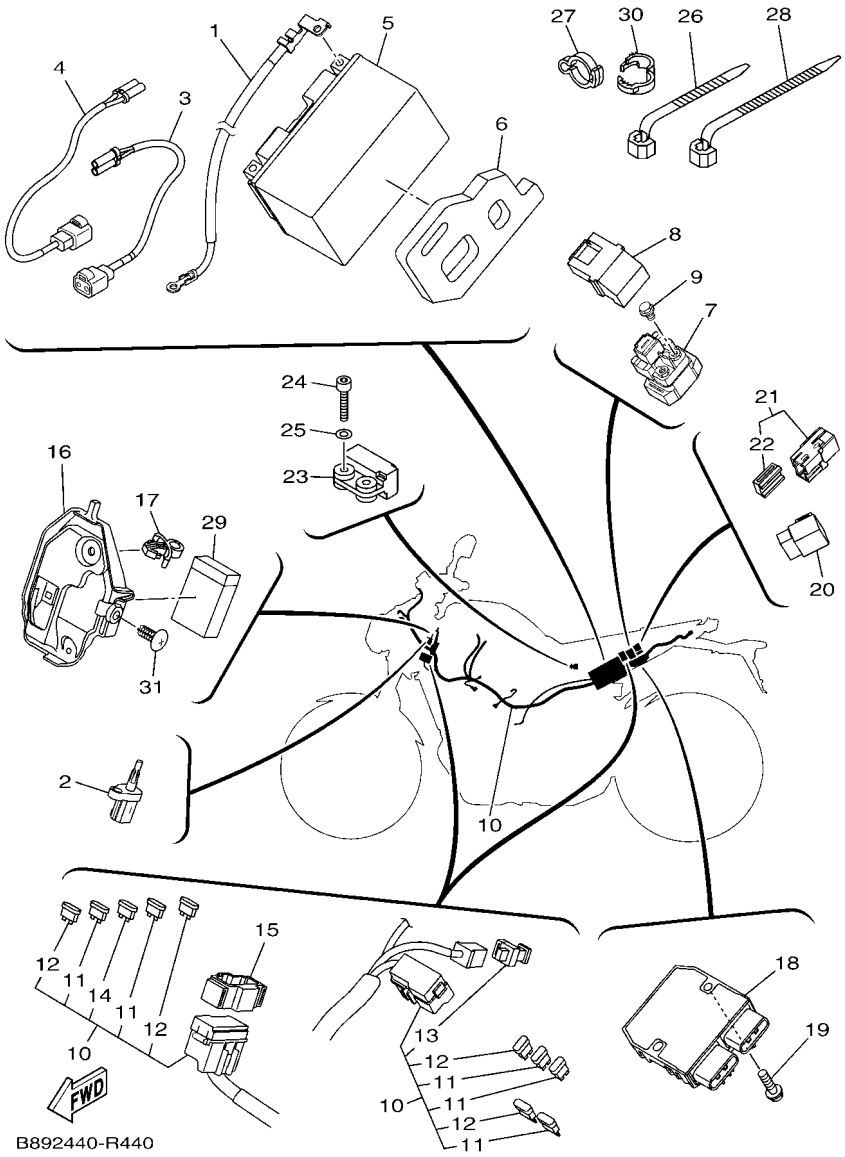

FIG. 44 ELECTRICAL 1

REF. NO.	PART NO.	DESCRIPTION	B892					REMARKS
28	3MA–82591–00	BAND	1					
29	1RC–82589–00	PROTECTER, WIRE HARNESS	1					
30	90464–16001	CLAMP	1					
31	90269–07015	RIVET	1					

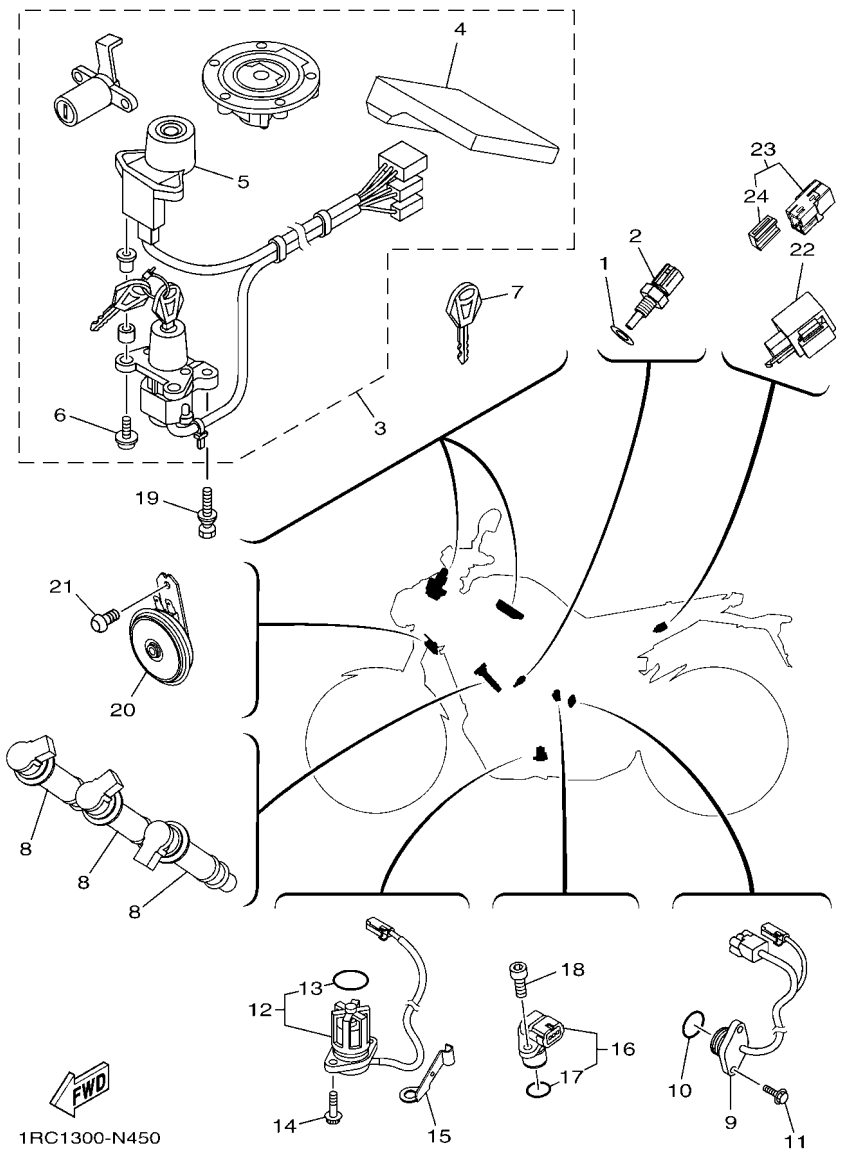

FIG. 45 ELECTRICAL 2

REF. NO.	PART NO.	DESCRIPTION	B892					REMARKS
1	90430–10004	GASKET	1					
2	4P9–83591–00	THERMO UNIT	1					
3	1RC–W8250–20	MAIN SW. IMMOBILIZER KIT	1					
4	1RC–8591A–01	.ENGINE CONTROL UNIT ASSY	1					
5	1RC–8255P–00	.IMMOBILIZER. UNIT COMP.	1					
6	5SL–82113–01	.SCREW	2					
7	5SL–82511–08	BLANK KEY	1					AP
8	1RC–82310–00	IGNITION COIL ASSY	3					
9	1RC–82540–00	NEUTRAL SWITCH ASSY	1					
10	93210–21001	O-RING	1					
11	90110–05067	BOLT, HEXAGON SOCKET HEAD	2					
12	5S7–85720–00	OIL LEVEL GAUGE ASSY	1					
13	5VY–8A8E0–00	.O-RING	1					
14	95022–06016	BOLT, FLANGE	2					
15	90465–08053	CLAMP	1					
16	1TP–83755–00	SENSOR, SPEED	1					
17	4D9–81168–00	.O-RING	1					
18	90110–06161	BOLT, HEXAGON SOCKET HEAD	1					
19	90109–08195	BOLT	2					
20	1RC–83371–00	HORN	1					
21	92017–06010	BOLT, BUTTON HEAD	1					
22	4GY–83350–00	FLASHER RELAY ASSY	1					
23	1ST–81950–00	RELAY ASSY (1ST-00)	1					
24	5JJ–81952–00	.HOLDER, RELAY	1					

PART NO.	REF. NO.
B90–11101–09	1 – 1
5VY–1111G–00	1 – 11
	1 – 28
	1 – 30
2C0–11133–11	1 – 2
1RC–11165–00	1 – 23
4TR–11167–00	1 – 26
1RC–11169–00	1 – 24
B90–11181–00	1 – 12
1RC–11191–00	1 – 13
1RC–11193–01	1 – 15
214–11198–01	8 – 5
1RC–11400–00	2 – 1
2S3–11413–00	2 – 14
2S3–11413–10	2 – 14
2S3–11413–20	2 – 14
2S3–11413–30	2 – 14
2S3–11413–40	2 – 14
5VY–11416–00	2 – 5
5VY–11416–10	2 – 5
5VY–11416–20	2 – 5
5VY–11416–30	2 – 5
5VY–11416–A0	2 – 5
1RC–11500–00	2 – 13
1RC–11603–00	2 – 7
1RC–11631–00	2 – 6
39P–11633–00	2 – 8
1RC–11650–00	2 – 2
1RC–11654–00	2 – 3
1RC–11656–00	2 – 4
1RC–11656–10	2 – 4
1RC–11656–20	2 – 4
1RC–11656–30	2 – 4
1RC–12111–00	3 – 1
1RC–12113–00	3 – 4
1RC–12114–00	3 – 5
1RC–12116–00	3 – 3
3D7–12117–00	3 – 6
1WG–12118–00	3 – 7
4TE–12119–00	3 – 8
1RC–12121–00	3 – 2
4C8–12153–09	3 – 10
4C8–12153–10	3 – 10
1HX–12168–F0	3 – 9
1HX–12168–H1	3 – 9
1HX–12168–K1	3 – 9
1HX–12168–M1	3 – 9
1HX–12168–R1	3 – 9

PART NO.	REF. NO.
1HX–12168–U1	3 – 9
1HX–12168–W1	3 – 9
1HX–12168–Y1	3 – 9
1HX–12169–11	3 – 9
1HX–12169–31	3 – 9
1HX–12169–50	3 – 9
1HX–12169–70	3 – 9
1HX–12169–90	3 – 9
1HX–12169–E0	3 – 9
1HX–12169–G0	3 – 9
1HX–12169–J0	3 – 9
1HX–12169–L0	3 – 9
1HX–12169–N0	3 – 9
1HX–12169–T0	3 – 9
1RC–12170–00	4 – 1
20S–12176–00	4 – 3
1RC–12180–00	4 – 2
B90–12210–00	4 – 6
1WS–12213–00	4 – 9
5SL–12214–00	4 – 8
5EL–12228–00	4 – 7
5BE–12241–00	1 – 14
1RC–12250–01	4 – 12
1RC–12251–00	4 – 11
5VY–12277–00	26 – 14
	26 – 33
1RC–12405–00	6 – 2
1RC–12410–00	5 – 21
1RC–12420–00	5 – 1
1RC–12422–00	5 – 3
5FC–12437–00	6 – 10
5VK–12438–00	5 – 7
1RC–12439–00	5 – 11
1RC–1243A–00	6 – 20
1RC–12450–00	5 – 2
1RC–12459–00	5 – 4
1RC–12461–00	6 – 1
4FL–12462–00	6 – 9
1RC–12467–00	6 – 5
1RC–12469–00	5 – 23
1AA–12535–00	6 – 4
1RC–12564–00	14 – 7
1RC–12572–00	10 – 4
1RC–12576–00	5 – 35
1RC–12577–00	5 – 18
1RC–12578–00	5 – 26
1RC–12579–00	5 – 29
1RC–12588–00	5 – 32

PART NO.	REF. NO.
1RC–12637–00	6 – 13
3D8–12675–00	6 – 3
3D8–12675–00	8 – 10
5VY–13117–10	7 – 9
1RC–13300–00	7 – 1
5PW–13318–00	8 – 12
1RC–13355–00	7 – 2
B56–13400–00	8 – 3
1RC–13410–00	7 – 6
1RC–13414–00	8 – 6
5GH–13440–50	8 – 2
1RC–13470–00	8 – 9
5PW–13473–00	8 – 11
5PW–13475–00	8 – 13
1RC–13542–00	9 – 4
1RC–13544–00	9 – 2
1RC–13556–00	10 – 6
8FP–13556–00	10 – 7
1RC–13573–00	10 – 10
1RC–13635–00	10 – 1
1RC–13750–00	9 – 1
4C8–13761–00	10 – 8
1RC–13907–00	27 – 18
1RC–13930–00	10 – 3
1RC–13938–00	10 – 5
1RC–13971–10	27 – 31
2C0–14105–00	9 – 15
5PS–14147–00	10 – 9
2C0–14216–00	9 – 9
5FL–14216–00	9 – 14
8CC–14216–10	9 – 12
3XV–14251–00	9 – 7
8FP–14349–00	9 – 6
8FP–14349–20	9 – 5
8FP–14349–30	9 – 8
1RC–14402–00	10 – 13
1RC–14411–00	10 – 12
1RC–14425–00	10 – 23
1RC–14426–00	10 – 24
1RC–14451–00	10 – 14
1RC–14452–00	10 – 15
1RC–14453–00	10 – 17
1RC–14454–00	10 – 19
1RC–1445C–00	11 – 7
1RC–14463–00	10 – 18
4FM–14613–00	12 – 5
1RC–14708–00	12 – 3
1RC–14710–00	12 – 1

PART NO.	REF. NO.
5VY–14747–00	12 – 7
5VY–1482K–00	1 – 17
5JW–1482K–01	1 – 16
2S3–14840–00	11 – 1
1RC–14881–00	11 – 2
1RC–14882–00	11 – 4
1RC–14883–00	11 – 6
5JW–14889–00	1 – 21
5PS–14890–00	1 – 20
5SL–14890–00	1 – 18
5SL–14899–00	1 – 19
1RC–15100–08	13 – 1
5EB–15155–00	13 – 2
23P–15156–00	13 – 9
1RC–15163–00	17 – 2
36Y–15189–00	13 – 18
1RC–15191–00	14 – 23
1RC–15199–00	14 – 15
1RC–15338–00	13 – 26
2H7–15361–00	13 – 17
5GJ–15363–10	14 – 24
1RC–15377–00	13 – 24
1RC–15393–00	10 – 25
1RC–15411–00	14 – 1
1RC–15416–00	14 – 26
1RC–15418–00	13 – 25
1RC–15421–00	14 – 16
1RC–15441–00	13 – 22
1RC–15451–00	14 – 6
1RC–15456–00	14 – 27
1RC–15461–00	14 – 17
1RC–15484–00	14 – 13
1RC–15490–00	14 – 20
1RC–15512–00	15 – 1
1RC–15515–00	15 – 5
5EB–15521–00	15 – 2
1RC–15590–00	15 – 3
1RC–15789–00	14 – 21
1RC–16150–00	16 – 1
5VY–16154–00	16 – 2
2C0–16164–00	16 – 21
5VY–16164–00	16 – 20
1RC–16181–00	16 – 22
5TA–16321–00	16 – 4
5VY–16325–00	16 – 5
1RC–16330–00	16 – 10
1RC–16340–00	16 – 16
132–16346–00	19 – 2

PART NO.	REF. NO.
5VY–16351–10	16 – 6
4XV–16356–01	16 – 15
1RC–16371–00	16 – 3
5VY–16382–10	16 – 25
1RC–17121–00	17 – 13
1RC–17131–00	17 – 8
1RC–17151–00	17 – 5
1RC–17161–00	17 – 10
1RC–17211–00	17 – 32
2PP–17221–00	17 – 21
1RC–17231–00	17 – 29
1RC–17241–00	17 – 26
1RC–17251–10	17 – 30
2PP–17261–00	17 – 24
1RC–17411–00	17 – 1
1RC–17421–00	17 – 16
5PS–17460–00	17 – 34
1RC–18101–01	19 – 8
1RC–18110–00	19 – 17
1RC–18112–00	19 – 14
5EB–18113–00	19 – 18
3VD–18115–00	19 – 19
5VX–18116–00	19 – 22
1D7–18127–00	19 – 4
1RC–18140–00	19 – 11
5VX–18154–00	19 – 23
2C0–18175–00	19 – 10
1RC–18511–00	18 – 4
1RC–18512–00	18 – 5
1RC–18513–00	18 – 6
1RC–18531–00	18 – 7
20S–18535–00	18 – 8
2C0–18536–00	18 – 9
1RC–18540–00	18 – 1
3D7–18542–00	18 – 3
1RC–18562–00	18 – 10
1RC–21110–40	20 – 1
1RC–2117E–00	21 – 16
1RC–2117G–00	20 – 15
1RC–2117X–00	20 – 4
1RC–2117Y–00	20 – 5
1RC–21190–00	20 – 2
5VX–21289–00	20 – 13
1RC–2137W–00–P0	22 – 10
1RC–2137X–00–P0	22 – 25
1RC–2144G–00	35 – 32
1RC–21495–00	20 – 8
4C8–21495–00	20 – 12

PART NO.	REF. NO.
1RC–21511–00–P0	21 – 1
1RC–21511–00–P8	21 – 1
4B5–2153E–00	22 – 47
	22 – 48
4B5–2153E–50	22 – 47
	22 – 48
4C8–21568–10	27 – 39
1RC–21629–01	21 – 18
1RC–2163E–00	21 – 29
1RC–2164F–00	21 – 28
1RC–21650–00	23 – 19
14B–21668–00	21 – 38
1RC–21682–00	21 – 34
1RC–21711–00–P0	22 – 29
1RC–21721–00–P0	22 – 37
1RC–2172E–00	22 – 1
1RC–2172W–00	6 – 30
1RC–21731–00	22 – 30
1RC–2173E–00	22 – 45
1RC–2173E–50	22 – 45
1RC–2173F–00	22 – 46
1RC–2173F–50	22 – 46
1RC–21741–00	22 – 38
1RC–21747–00	22 – 13
	22 – 28
1RC–21748–00	6 – 37
1RC–21749–00	6 – 33
1RC–2174E–00	22 – 14
1RC–21781–00	22 – 49
1RC–21782–00	22 – 50
1RC–21816–00	6 – 29
1RC–21826–00	6 – 26
1RC–21828–00	6 – 25
1RC–21871–00	6 – 23
1RC–21875–00	6 – 24
1RC–22110–00	23 – 1
20S–22128–00	23 – 6
46X–22141–00	23 – 46
1RC–2214F–00	23 – 23
1RC–2214G–00	23 – 25
1RC–22151–00	23 – 12
1RC–22159–00	23 – 47
1RC–2217A–00	23 – 31
1RC–2217M–00	23 – 43
30X–2219X–00	23 – 4
1RC–22210–01	24 – 1
1RC–22210–41	24 – 1
1RC–2221A–00	23 – 22

PART NO.	REF. NO.
1RC–2221B–00	23 – 24
1RC–22311–00	23 – 14
1RC–22358–00	23 – 30
1RC–22825–00	6 – 28
1RC–23102–30	26 – 20
1RC–23102–40	26 – 20
1RC–23103–30	26 – 1
1RC–23103–40	26 – 1
1RC–23110–01	26 – 22
2PP–23111–00	26 – 36
2PP–23111–10	26 – 17
1RC–23118–00	26 – 15
	26 – 34
1RC–23120–01	26 – 3
4KM–23123–01	26 – 42
1RC–23125–00	26 – 8
	26 – 27
2PP–23126–10	26 – 2
	26 – 21
1RC–23126–40	26 – 2
	26 – 21
1RC–23141–00	26 – 13
	26 – 32
4EB–23144–00	26 – 4
	26 – 23
4EB–23145–01	26 – 6
	26 – 25
36Y–23146–10	26 – 7
	26 – 26
3XJ–23147–L0	26 – 18
	26 – 37
26H–23156–00	26 – 5
	26 – 24
509–23158–L0	26 – 11
	26 – 30
1RC–23170–00	26 – 29
1RC–23170–10	26 – 10
4FM–23171–40	26 – 9
	26 – 28
278–23181–50	26 – 12
	26 – 31
1RC–23340–11	26 – 38
3LC–23357–00	26 – 16
	26 – 35
1RC–23377–00	25 – 19
1RC–23389–00	25 – 16
1RC–23393–00	25 – 7
5VX–23415–00	25 – 2

PART NO.	REF. NO.
26H–23418–01	25 – 5
1RC–23435–30	25 – 8
1RC–23441–11	25 – 10
3GB–23448–00	23 – 34
1RC–2344A–11	25 – 11
3FV–23462–00	26 – 39
1RC–23857–00	33 – 10
1RC–24104–00	27 – 8
23P–24104–01	27 – 2
1RC–24106–00	27 – 29
1RC–24108–00	27 – 30
1RC–24110–00–P5	27 – 1
1RC–2413B–00	27 – 37
1RC–2413Y–00	27 – 13
2PP–2414J–00	27 – 40
B87–24161–00	27 – 38
1RC–2418B–01	27 – 26
1RC–2419B–01	27 – 27
1RC–241B1–00	27 – 32
1RC–24315–00	27 – 22
1RC–24316–00	27 – 24
3D7–24339–00	27 – 9
68V–24376–00	9 – 3
1RC–24486–00	27 – 20
1RC–24491–00	27 – 19
39P–24602–10	27 – 15
1RC–2465B–00	21 – 30
1RC–24730–00	28 – 1
4BP–24780–00	28 – 4
1RC–2478X–00	28 – 6
1RC–24847–11	25 – 13
1RC–24848–11	25 – 14
2PP–25117–00	29 – 2
1RC–25168–00–P0	29 – 1
1RC–25168–00–P2	29 – 1
1RC–25181–00	29 – 9
2PP–25317–00	31 – 7
1RC–25338–00–P0	31 – 3
1RC–25338–00–P2	31 – 3
1RC–25364–00	31 – 8
5JJ–25366–00	31 – 12
1RC–2537W–00	31 – 19
1RC–25381–00	31 – 24
1RC–25383–00	31 – 14
3SP–25388–00	31 – 22
1RC–25389–00	31 – 23
5MT–25398–00	29 – 7
	31 – 11

PART NO.	REF. NO.
5MT–25398–10	29 – 7
	31 – 11
5MT–25398–10	29 – 7
	31 – 11
1RC–25445–00	31 – 16
4SV–25802–00	30 – 6
	30 – 17
5SL–25802–00	32 – 4
4SV–25802–10	30 – 4
	30 – 15
5SL–25803–00	32 – 5
3GM–25803–10	30 – 5
	30 – 16
3MA–25803–10	30 – 7
	30 – 18
5SL–25805–00	30 – 8
	30 – 19
5VX–25806–00	32 – 12
1MC–25807–00	34 – 2
56P–25808–50	36 – 2
1RC–2580A–00	34 – 1
1RC–2580T–00	30 – 3
1RC–2580U–00	30 – 14
1RC–2580W–00	32 – 3
1RC–2581T–00	30 – 1
1J3–25824–00	30 – 12
	30 – 23
1UY–25824–51	32 – 16
306–25825–01	30 – 13
	30 – 24
1UY–25825–51	32 – 17
5SL–25827–00	32 – 18
5SL–25827–10	32 – 19
5SL–25828–01	32 – 20
2D1–2582A–00	36 – 3
1RC–2582E–00	36 – 27
1RC–2582W–00	32 – 1
5SL–25838–00	32 – 7
1RC–2583V–00	36 – 1
2C0–25852–00	36 – 8
5VS–25852–00	34 – 3
20S–25854–00	34 – 5
2VN–25854–00	36 – 9
2VN–25855–00	36 – 10
5VS–25855–00	34 – 4
4BP–2585F–01	36 – 4
5VS–25867–00	34 – 11
1RC–25872–00	34 – 20

PART NO.	REF. NO.
1RC–25873–00	34 – 16
1RC–25874–00	36 – 19
5SL–25876–00	25 – 17
14B–25894–00	36 – 7
1RC–25895–00	36 – 13
5VS–2589F–00	34 – 7
5VS–2589H–00	34 – 6
5SL–25914–00	32 – 9
5DH–25916–00	32 – 14
3JD–25917–00	32 – 11
5SL–25917–00	32 – 6
13S–25919–00	30 – 9
	30 – 20
5SL–25919–00	32 – 8
1RC–25921–50	32 – 10
4SV–25924–00	30 – 10
	30 – 21
8CR–25924–00	32 – 13
3GM–25925–00	30 – 11
	30 – 22
1RC–25926–00	32 – 15
1RC–26111–00	33 – 1
1RC–26132–00	6 – 17
23P–26133–00	33 – 13
	33 – 15
1RC–26199–00	21 – 6
1RC–2622H–00	21 – 36
4YR–26240–02	33 – 3
4YR–26241–02	33 – 2
5GJ–26246–00	33 – 4
1RC–26280–00	33 – 12
4KG–26281–00	33 – 6
3XW–26282–01	33 – 7
1RC–26290–00	33 – 14
1RC–26302–00	33 – 5
2C0–26326–00	36 – 12
5VS–26332–00	34 – 10
1RC–26335–00	33 – 9
4GL–27114–00	28 – 2
1RC–27200–00	35 – 27
4BP–27222–02	36 – 5
1RC–27267–00	35 – 40
1RC–27311–00	35 – 1
1RC–27321–00	35 – 2
1RC–27410–00	35 – 15
1RC–2741L–01	35 – 45
1RC–2742L–01	35 – 52
3VR–27431–02	35 – 44

PART NO.	REF. NO.
1RC–27432–00	35 – 34
5VX–27437–00	35 – 48
	35 – 55
3VR–27441–02	35 – 51
1RC–27442–00	35 – 17
1RC–27443–00	35 – 26
3XV–27461–02	35 – 21
1RC–274A3–00	35 – 12
1RC–28100–00	28 – 10
1RC–28135–00	28 – 11
2H7–28151–00	28 – 12
2GV–28152–00	28 – 13
23P–28164–00	28 – 14
4KG–28186–10	28 – 15
1RC–2831V–00–P0	41 – 11
1RC–2832V–00–P0	41 – 12
2S3–28347–00	27 – 28
5PS–28372–00	21 – 9
1RC–2837N–00	22 – 7
	22 – 22
682–44532–00	21 – 17
4D9–81168–00	45 – 17
1RC–81410–00	37 – 2
1RC–81450–00	37 – 1
1RC–81815–00	38 – 9
28P–81826–00	38 – 2
4XV–8182A–00	38 – 6
	38 – 10
4B5–81840–00	38 – 4
11H–81844–00	38 – 8
1FK–81847–00	38 – 7
3TB–81847–00	38 – 3
	38 – 5
1RC–81890–00	38 – 1
1RC–81940–00	44 – 7
1ST–81950–00	44 – 21
	45 – 23
5VK–81950–40	44 – 20
5JJ–81952–00	44 – 22
	45 – 24
1D7–81960–01	44 – 18
5VY–82100–00	44 – 5
5SL–82113–01	45 – 6
1RC–82116–00	44 – 1
5SL–82119–30	44 – 8
1RC–8212B–00	21 – 5
1RC–82137–00	21 – 12
5JJ–82151–00	44 – 11

PART NO.	REF. NO.
5JJ–82151–10	44 – 12
5JW–82151–10	44 – 13
5JJ–82151–80	44 – 14
34D–82176–00	20 – 14
1RC–82309–00	44 – 3
1RC–82310–00	45 – 8
2C0–82380–00	9 – 10
B90–8246K–00	44 – 6
1RC–82509–00	44 – 4
5SL–82511–08	45 – 7
1RC–82530–00	35 – 31
1RC–82540–00	45 – 9
1RC–82544–00	44 – 15
1RC–8255P–00	45 – 5
1RC–82566–50	35 – 7
5PS–82576–01	44 – 23
1RC–82589–00	44 – 29
1RC–82590–01	44 – 10
3MA–82591–00	44 – 28
1RC–82599–00	44 – 16
1B3–82911–00	43 – 1
3YX–82917–01	43 – 8
1KB–83310–00	39 – 11
1KB–83311–00	39 – 2
	39 – 7
	39 – 15
	39 – 20
3D7–83318–10	39 – 5
	39 – 10
	39 – 14
	39 – 19
1KB–83320–00	39 – 16
1RC–83330–00	39 – 1
1KB–8333A–00	39 – 12
1RC–83340–00	39 – 6
1KB–8334A–00	39 – 17
4GY–83350–00	45 – 22
1RC–83371–00	45 – 20
1RC–83500–00	40 – 1
1RC–83500–10	40 – 1
4XV–83513–00	40 – 4
1RC–83559–00	40 – 5
4P9–83591–00	45 – 2
1TP–83755–00	45 – 16
5EB–83912–03	43 – 2
5JJ–83913–00	43 – 11
5VS–83922–00	34 – 9
4XV–83929–00	43 – 7

PART NO.	REF. NO.
2C0–83945–00	43 – 3
5LV–83951–00	43 – 6
1RC–83963–00	43 – 14
1RC–83972–01	43 – 12
1HP–83980–01	34 – 12
1RC–84152–00	41 – 14
1RC–84154–00	41 – 22
1RC–84300–00	41 – 1
1RC–84314–00	41 – 2
1RC–8431R–00	41 – 25
1RC–8431U–00	41 – 20
1RC–84347–00	41 – 3
1TP–84347–00	21 – 25
1RC–84359–00	41 – 5
1RC–84369–00	41 – 17
1RC–84397–00	41 – 4
1RC–84527–00	41 – 27
1RC–84547–00	21 – 24
1RC–84700–00	42 – 1
1RC–84724–00	41 – 7
1RC–84740–00	21 – 23
1RC–84746–00	41 – 6
5SL–84753–00	27 – 35
3Y6–85130–02	21 – 21
5S7–85720–00	45 – 12
1MC–85884–00	9 – 13
13S–85885–00	9 – 11
5YU–85886–00	44 – 2
1RC–8591A–01	45 – 4
59C–8592A–00	12 – 2
5VY–8A8E0–00	45 – 13
3D9–H3333–10	39 – 4
	39 – 9
	39 – 13
	39 – 18
1KB–H333A–00	39 – 3
1KB–H334A–00	39 – 8
1RC–W2470–00	28 – 8
1RC–W8250–20	45 – 3
1RC–Y2410–00–08	27 – 1
90101–08013	23 – 27
90101–10042	24 – 2
90105–06027	1 – 3
90105–06066	7 – 4
90105–06080	6 – 7
90105–06126	23 – 26
90105–06202	13 – 14
90105–07006	4 – 4

PART NO.	REF. NO.
90105–10174	23 – 50
90105–10188	35 – 3
90105–10210	23 – 41
	23 – 44
90105–10246	35 – 43
90105–10391	20 – 9
90105–10435	35 – 20
90105–10437	20 – 10
90105–10440	30 – 25
90105–126A8	2 – 11
90109–06100	13 – 16
90109–06174	22 – 34
	22 – 42
90109–061F7	1 – 8
90109–06202	21 – 10
90109–06271	1 – 29
90109–06293	1 – 10
90109–064G6	30 – 2
90109–066F0	1 – 27
90109–08045	32 – 2
90109–08170	12 – 10
90109–08195	45 – 19
90109–08231	35 – 16
	35 – 25
90109–10027	23 – 36
90110–05028	27 – 21
90110–05067	45 – 11
90110–05112	27 – 16
90110–06108	13 – 23
90110–06161	45 – 18
90110–06168	14 – 14
90110–06173	7 – 10
90110–06175	1 – 22
90110–06200	21 – 3
90110–06223	37 – 3
90110–06233	6 – 36
	10 – 27
90110–06274	5 – 25
90110–06388	5 – 16
	10 – 11
	14 – 10
	14 – 19
	38 – 11
90110–06389	14 – 11
90110–06394	5 – 15
	14 – 12
90110–06395	4 – 10
90110–06396	5 – 13

PART NO.	REF. NO.
90110–06396	14 – 28
90110–10043	20 – 6
90110–10043	22 – 11
	22 – 26
	22 – 31
	22 – 39
90111–05036	35 – 8
90111–05039	22 – 9
	22 – 24
90111–06038	40 – 7
	41 – 8
90111–06060	12 – 4
90111–06061	21 – 20
90111–06098	19 – 25
90111–06123	41 – 18
90111–06130	13 – 29
90111–06136	27 – 11
90111–06150	41 – 24
90111–06151	23 – 21
90111–08028	35 – 29
90111–08038	36 – 15
90111–10039	35 – 18
90116–08087	1 – 6
90116–10048	31 – 17
90119–06200	27 – 7
90119–06257	16 – 9
90119–06267	22 – 3
	22 – 18
90119–09010	13 – 8
90119–09013	13 – 7
90119–09015	1 – 7
90149–05037	1 – 25
90149–06082	17 – 15
90149–06158	18 – 11
90149–08030	15 – 4
90149–08230	35 – 58
90149–10059	20 – 3
90159–06150	35 – 39
90160–05012	21 – 35
90160–05013	10 – 16
90167–05080	40 – 2
90170–06228	19 – 20
90170–08010	36 – 6
90179–05523	6 – 32
	22 – 8
	22 – 23
90179–06072	41 – 19
90179–08410	12 – 6

PART NO.	REF. NO.
90179–10024	20 – 11
90179–20011	16 – 13
90179–22018	17 – 36
90179–25004	25 – 3
90183–05076	22 – 32
	22 – 40
90183–05M02	22 – 33
	22 – 41
90183–06069	21 – 8
90183–060A6	41 – 10
90185–08089	35 – 28
90185–18009	31 – 25
90201–04030	44 – 25
90201–05036	40 – 3
90201–06033	6 – 19
90201–06063	41 – 23
90201–06072	27 – 5
90201–08048	35 – 42
90201–08066	36 – 17
90201–08103	35 – 30
90201–087G2	12 – 9
90201–10029	16 – 18
90201–10035	23 – 39
	35 – 10
90201–10075	20 – 7
90201–101J1	24 – 4
90201–12008	2 – 12
90201–12541	5 – 14
90201–12575	19 – 7
90201–127E1	19 – 3
90201–13015	23 – 38
90201–17018	35 – 11
90201–177G4	19 – 12
90201–18021	31 – 26
90201–20008	17 – 37
90201–20030	16 – 11
90201–22018	25 – 6
90202–05180	22 – 12
	22 – 27
90202–26142	25 – 4
90206–17084	35 – 19
90208–20001	16 – 12
90208–22002	17 – 35
90209–21332	17 – 6
90209–21351	17 – 12
90209–22352	17 – 11
90209–28008	17 – 22
90214–28002	17 – 28

PART NO.	REF. NO.
90214–29002	17 – 27
90240–08005	36 – 16
90249–03002	21 – 31
90269–05005	41 – 21
90269–06001	22 – 6
	22 – 21
90269–07007	21 – 11
	22 – 35
	22 – 43
	23 – 13
	23 – 18
90269–07014	22 – 36
	22 – 44
90269–07015	44 – 31
90269–07077	27 – 34
90280–05029	2 – 10
90338–06018	22 – 2
	22 – 17
90338–07157	6 – 6
	28 – 3
90338–16262	13 – 5
90340–14011	13 – 20
90340–14132	8 – 4
90340–18002	1 – 4
90340–36005	14 – 2
90380–16134	23 – 2
90387–05028	36 – 11
90387–05042	21 – 26
90387–06022	23 – 20
90387–06057	22 – 5
	22 – 20
90387–06066	23 – 16
90387–06136	27 – 10
90387–06153	21 – 2
90387–06158	6 – 16
90387–06170	41 – 9
90387–06205	10 – 21
90387–06266	27 – 4
90387–06285	6 – 31
90387–06286	13 – 27
90387–06288	21 – 14
90387–062X0	23 – 15
90387–06372	19 – 24
	21 – 19
90387–06M16	35 – 38
90387–07391	41 – 15
90387–07717	6 – 8
	40 – 6

PART NO.	REF. NO.
90387–08021	12 – 8
90387–08102	35 – 41
90387–10050	35 – 9
90387–10106	23 – 49
90387–102R4	23 – 7
	23 – 40
90387–127W0	23 – 35
90387–17017	29 – 8
90387–20035	31 – 21
90387–20036	31 – 20
90387–21003	17 – 9
90387–25008	17 – 31
90387–25030	17 – 4
90387–28004	17 – 25
90387–30012	17 – 18
90387–31003	17 – 20
90401–10042	34 – 22
90401–10172	34 – 17
	34 – 21
	36 – 20
	36 – 24
90401–20008	8 – 1
90430–06014	5 – 12
90430–08143	14 – 5
90430–10004	45 – 1
90430–10005	34 – 18
	34 – 23
	36 – 21
	36 – 25
90445–197J2	35 – 6
90450–32003	5 – 33
	5 – 36
90450–38040	5 – 19
	5 – 34
90450–53007	10 – 20
90450–56009	10 – 2
90464–05003	33 – 19
90464–07M40	6 – 39
90464–13073	44 – 26
90464–14003	34 – 19
90464–14009	33 – 17
90464–14010	44 – 27
90464–15157	35 – 36
	44 – 17
90464–16001	33 – 18
	44 – 30
90464–16023	33 – 16
90464–18002	23 – 29

PART NO.	REF. NO.
90464–18002	34 – 24
	41 – 13
90464–18007	36 – 23
90464–20023	36 – 22
90465–06025	8 – 8
90465–08053	45 – 15
90467–08075	6 – 27
	6 – 35
90467–09006	27 – 23
	27 – 25
90467–10039	6 – 21
	6 – 22
90467–120A3	36 – 14
90467–14015	10 – 28
90467–15001	10 – 26
90467–17003	11 – 8
90467–17089	11 – 3
	11 – 5
90467–17128	5 – 28
	5 – 31
90467–200A0	5 – 27
	5 – 30
90467–310A0	5 – 20
	5 – 37
90480–01558	27 – 36
90480–06M19	21 – 4
90480–11009	21 – 27
90480–12012	23 – 11
90480–12314	10 – 22
90480–12607	35 – 37
90480–13010	7 – 8
90480–13018	13 – 28
90480–13203	6 – 34
90480–14003	22 – 4
	22 – 19
90480–14052	21 – 13
90480–14100	21 – 7
90480–14604	41 – 16
90480–15363	6 – 15
90480–18008	27 – 3
90501–06022	18 – 2
90501–12743	35 – 46
	35 – 53
90501–230A0	16 – 8
90506–18021	19 – 1
90506–20032	35 – 5
90506–23008	35 – 33
90508–09007	21 – 32

PART NO.	REF. NO.
90508–18051	16 – 17
90508–20572	35 – 24
90508–32141	19 – 9
90520–03014	14 – 22
90520–10003	22 – 16
90520–10022	22 – 15
90520–15012	27 – 33
91312–04020	44 – 24
91312–05010	27 – 17
91312–06020	19 – 15
91312–06025	8 – 7
91312–06030	6 – 18
91312–06035	7 – 5
91314–08030	25 – 9
	25 – 12
	26 – 41
91314–08035	26 – 19
91317–05035	33 – 8
91401–20012	36 – 18
91401–25015	35 – 50
	35 – 57
91402–25015	35 – 23
91701–08040	35 – 22
91702–08040	35 – 49
	35 – 56
91808–16023	1 – 5
92012–05030	6 – 38
92012–06020	21 – 15
92012–06030	35 – 14
92012–06035	27 – 6
92012–06040	35 – 13
92017–06010	33 – 11
	45 – 21
92017–06012	25 – 18
92017–06020	27 – 14
92017–08012	14 – 4
92902–04100	34 – 14
92902–04600	34 – 15
92907–05600	6 – 12
92907–08600	16 – 27
93101–12173	5 – 6
93102–12106	19 – 5
93102–15212	16 – 23
93102–25017	29 – 4
93102–28022	31 – 5
93102–40030	17 – 33
93106–22002	23 – 10
93106–40013	31 – 15

PART NO.	REF. NO.
93108–35004	23 – 5
93109–17071	23 – 9
	23 – 33
93210–04092	13 – 3
93210–07540	13 – 10
93210–12790	13 – 6
93210–14369	13 – 21
93210–16325	13 – 19
93210–19123	14 – 25
93210–21001	45 – 10
93210–22001	7 – 7
93210–28543	14 – 8
93210–30694	5 – 17
93210–357A3	14 – 3
93210–46044	5 – 24
93210–61750	5 – 10
93306–00106	5 – 5
93306–00304	16 – 7
93306–00416	31 – 6
93306–20352	29 – 3
93306–20464	17 – 14
	17 – 38
93306–20480	31 – 4
93306–205B5	31 – 13
93306–20663	17 – 17
93306–30534	17 – 3
93310–33277	16 – 14
93315–21570	16 – 24
93315–31758	23 – 8
	23 – 32
93317–11096	16 – 26
93317–11295	19 – 16
93317–22262	23 – 3
93399–99931	25 – 1
93399–99932	26 – 40
93430–02001	21 – 33
93440–25186	17 – 7
93440–31187	17 – 23
93440–64199	17 – 19
93450–18157	2 – 9
93501–04011	35 – 47
	35 – 54
93603–16219	5 – 8
93607–44002	4 – 13
93610–20189	14 – 18
93900–00030	29 – 6
	31 – 10
94112–17126	29 – 5

PART NO.	REF. NO.
94112–17127	29 – 5
94118–17077	31 – 9
94118–17078	31 – 9
94581–79066	7 – 11
94582–31110	31 – 1
94591–57128	4 – 5
94682–31031	31 – 2
94701–00431	1 – 9
95022–06008	44 – 9
95022–06014	28 – 9
95022–06016	28 – 7
	45 – 14
95022–06025	44 – 19
95027–06020	43 – 5
95302–08600	23 – 28
95304–06700	19 – 21
95602–05200	21 – 22
95602–06200	21 – 37
95602–10100	24 – 3
95602–10200	23 – 42
	23 – 45
	23 – 51
	25 – 15
	31 – 18
95602–14200	23 – 48
95607–06200	43 – 4
95612–10100	23 – 37
	35 – 4
95617–06100	34 – 8
95702–06500	28 – 5
95707–05500	36 – 26
95802–06010	35 – 35
95807–06016	41 – 26
95812–06025	27 – 12
95812–06040	13 – 11
95812–06050	13 – 12
95812–06065	13 – 13
95812–08060	13 – 15
95822–06012	6 – 14
95822–06025	5 – 22
97002–06016	23 – 17
97007–05012	6 – 11
98502–04012	34 – 13
98507–04010	43 – 10
98507–04020	43 – 15
98507–04025	43 – 13
98507–04030	43 – 16
98704–03020	43 – 9

PART NO.	REF. NO.
99001–07600	16 – 28
99002–10600	19 – 6
99009–10400	16 – 19
99009–12400	5 – 9
99009–15500	7 – 3
99009–17400	19 – 13
99530–08012	14 – 9
99530–10014	13 – 4
99530–12016	1 – 31

PART NO.	REF. NO.